Sun StorEdge™ N8600 Filer Hardware Setup

1 Find the items for hardware setup.

Cardboard pouches in the packaging on both sides of each unit contain various items that come with the filer. The rectangle below shows the items needed to set up a filer consisting of two Sun expansion cabinets. The number of key sets and power cables varies according to the number of Sun expansion cabinets. Only one serial cable is required regardless of the number of Sun expansion cabinets.

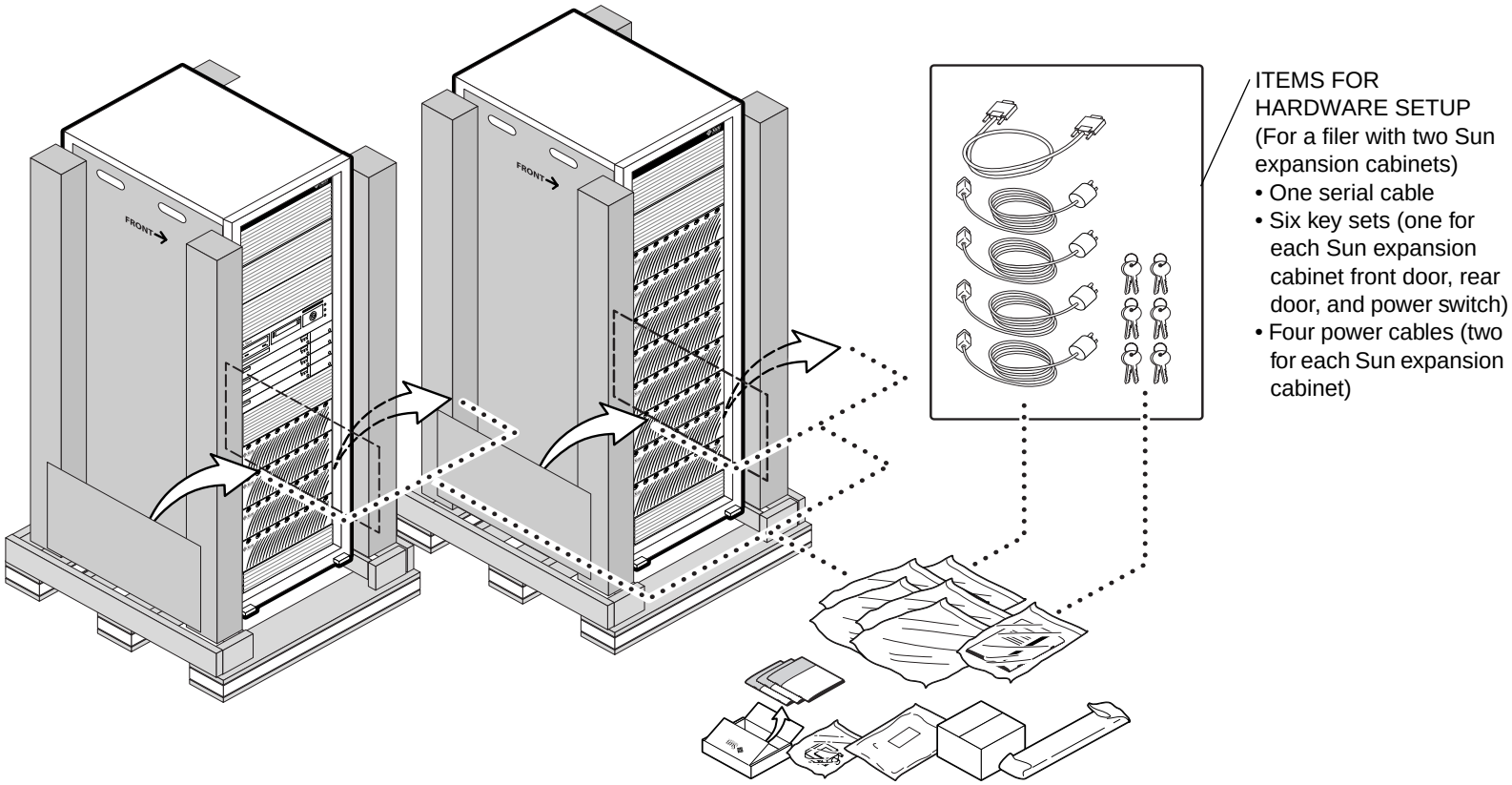

2 Connect the serial cable to the Sun Enterprise™ 4500 server of the filer and to your console.

You will use the console to perform the initial system configuration of the filer. You will remove this connection afterward.

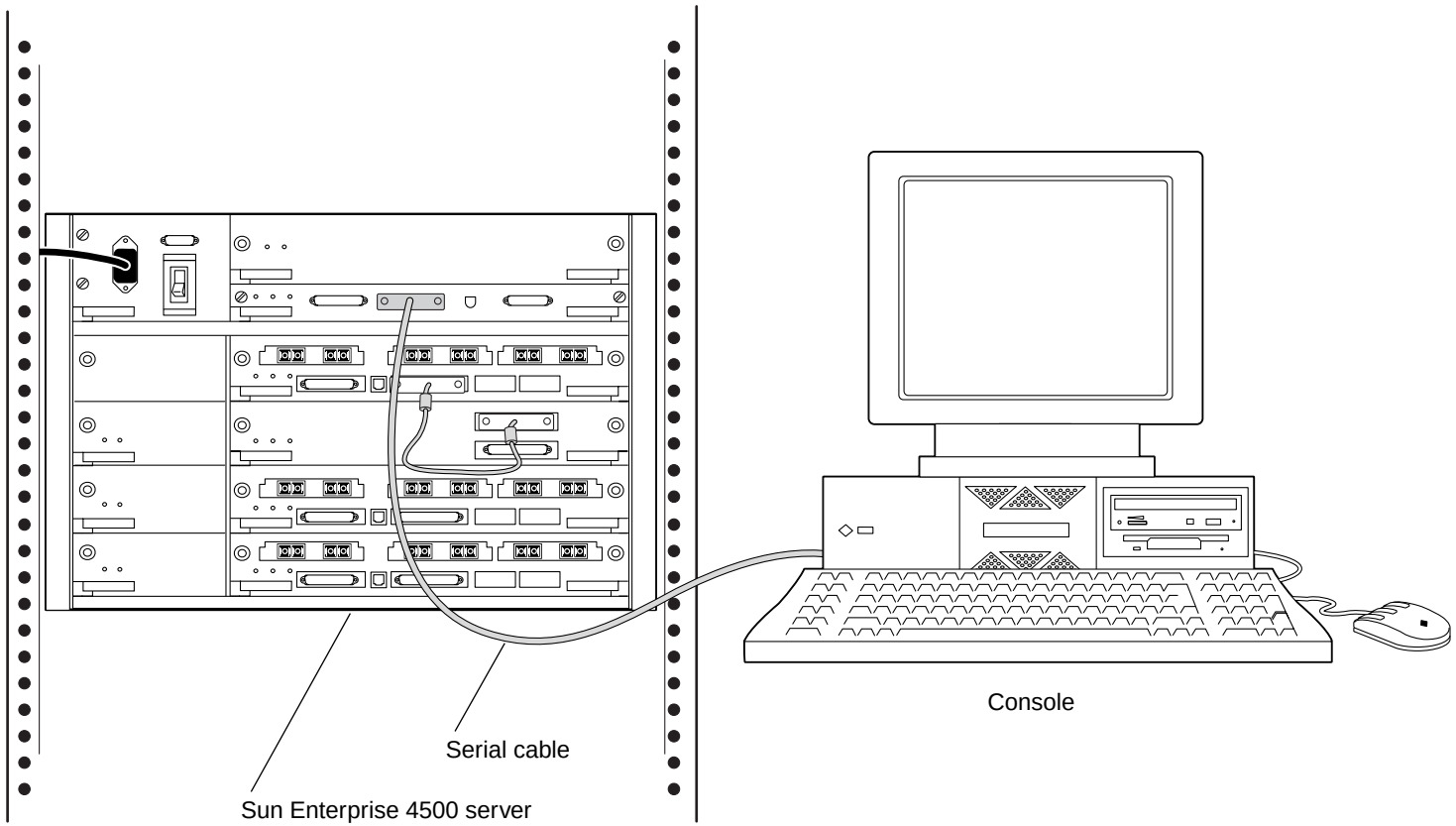

3 Connect the filer to your local area network (LAN).

You will use the LAN, not the data network, to configure and manage the filer.

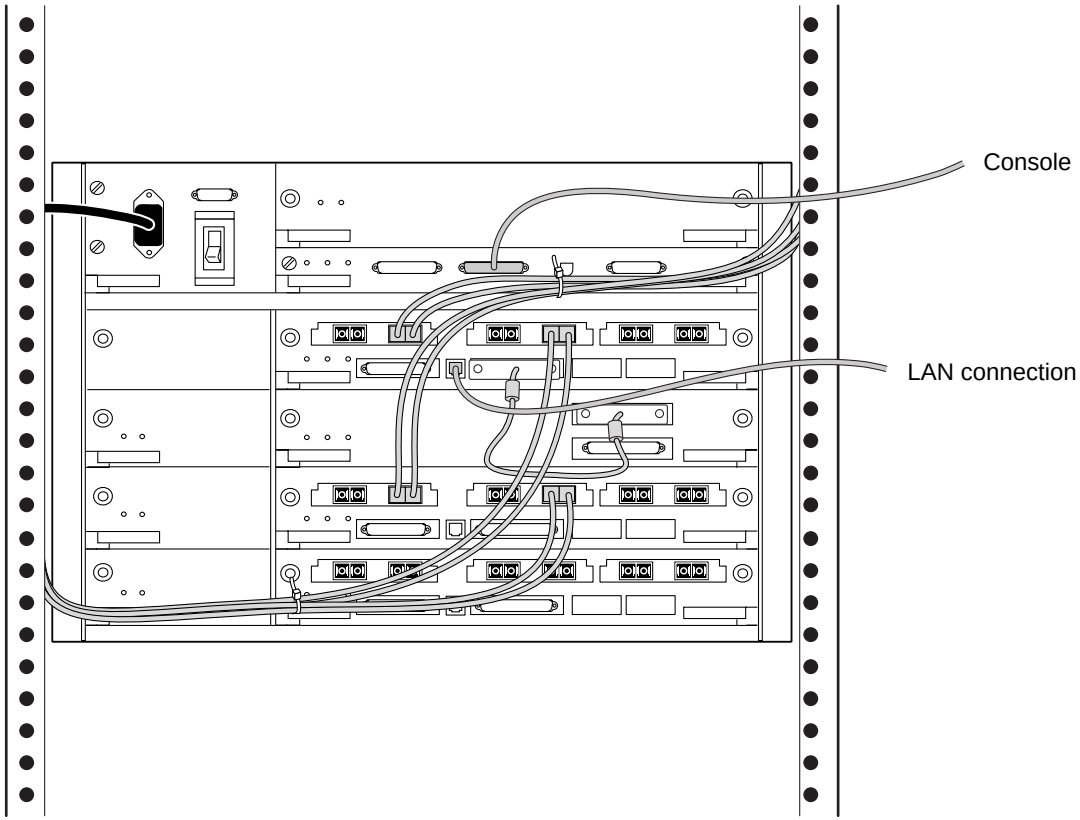

4 Connect one power cable to the back of the expansion cabinet power distribution unit.

Perform steps 4 through 8b on all the Sun expansion cabinets in your system.

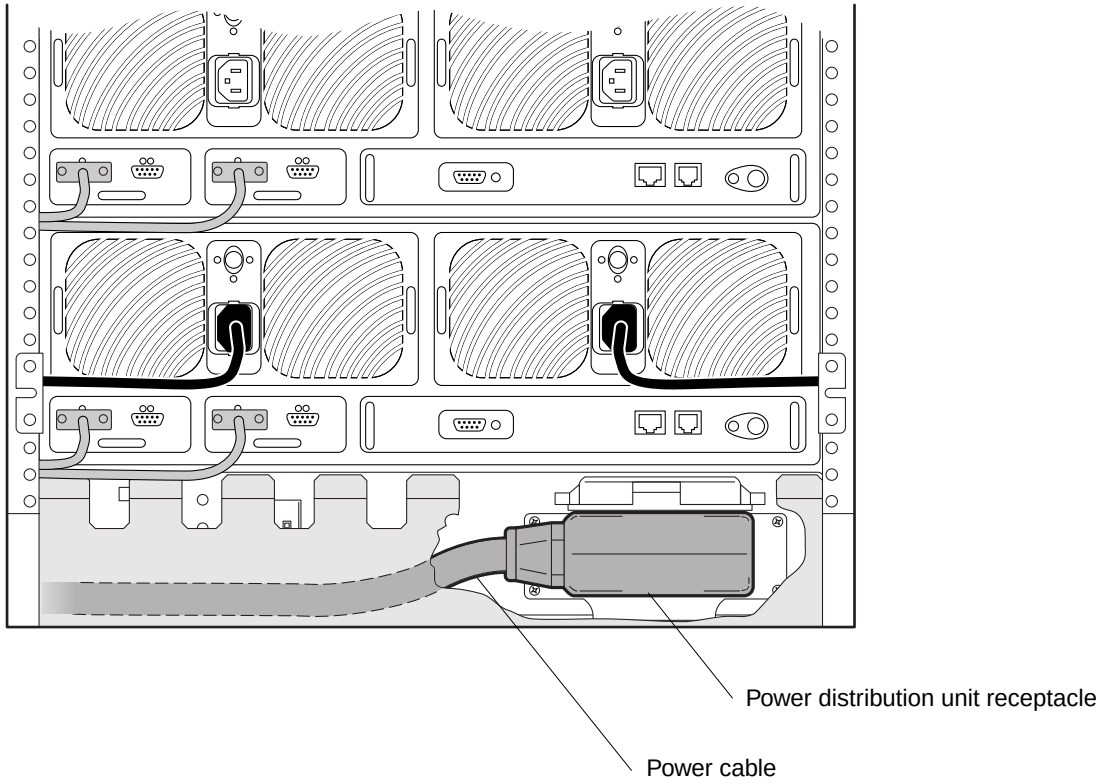

5 Connect the other power cable to the front of the expansion cabinet power distribution unit.

a. Remove the small panel on the bottom of the expansion cabinet.

b. Feed the power cable in from the back, under the unit, up through a passage way, and then connect it to the front of the power distribution unit.

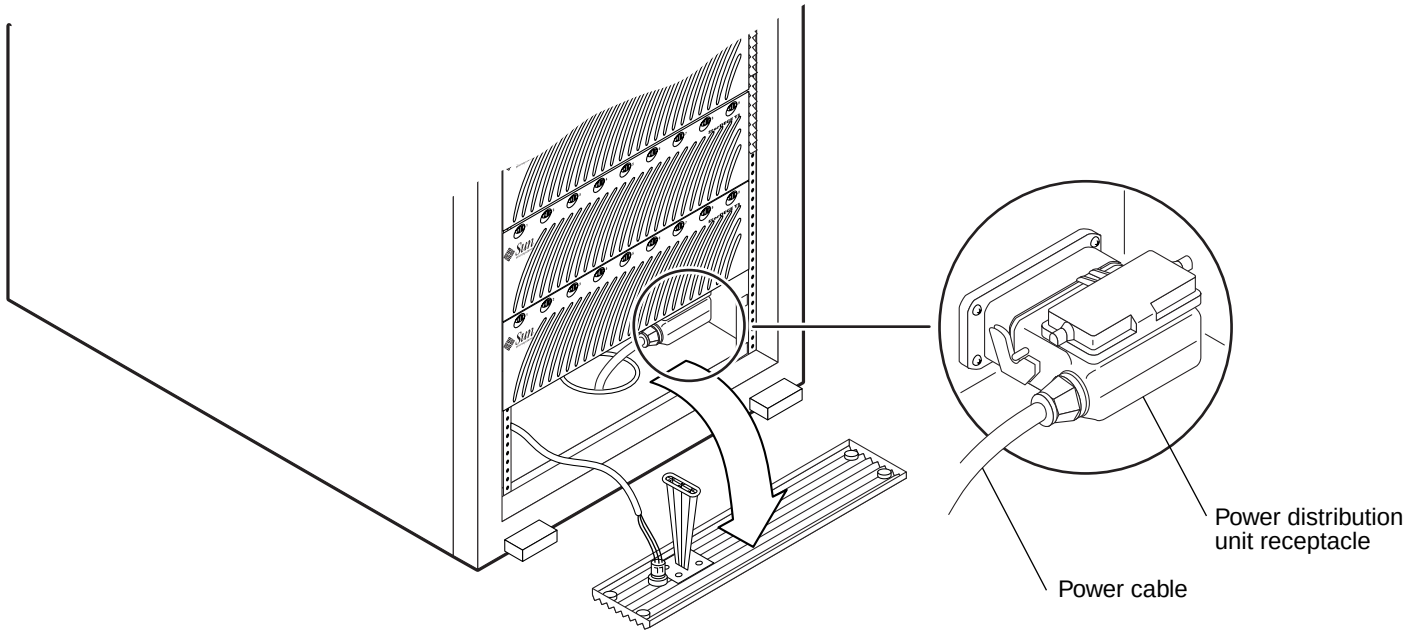

6 Ensure that the switches on the power distribution unit are in the down (power-on) position.

Replace the panel at the bottom of the expansion cabinet.

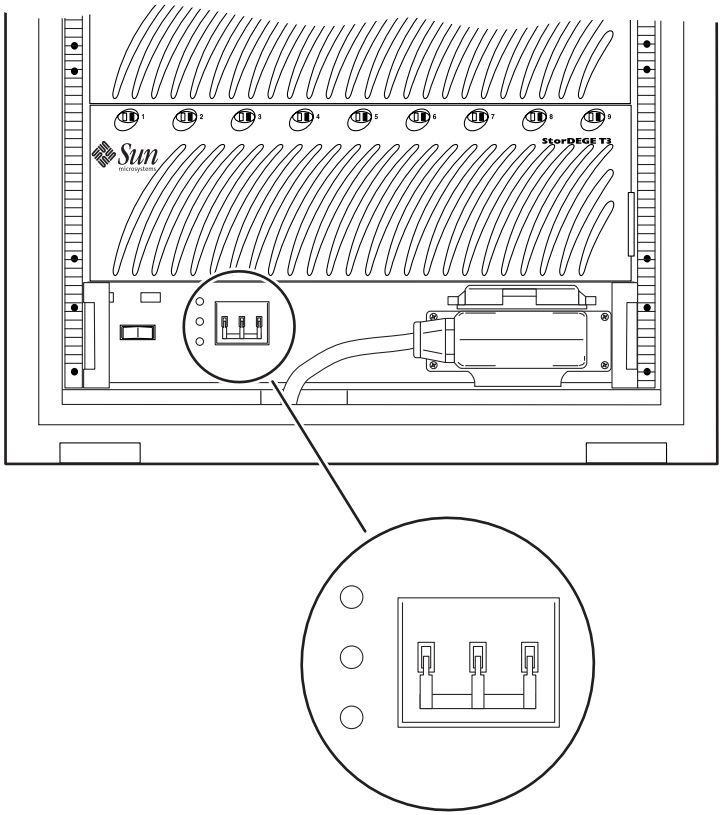

7 Power on the expansion cabinet.

a. At the back of the expansion cabinet, ensure that the Sun Enterprise 4500 Server power switch is off.

b. Ensure the power switch on every Sun StorEdge™ T3 Disk Tray is off.

c. Flip the three switches on the power distribution unit to the down (power-on) position.

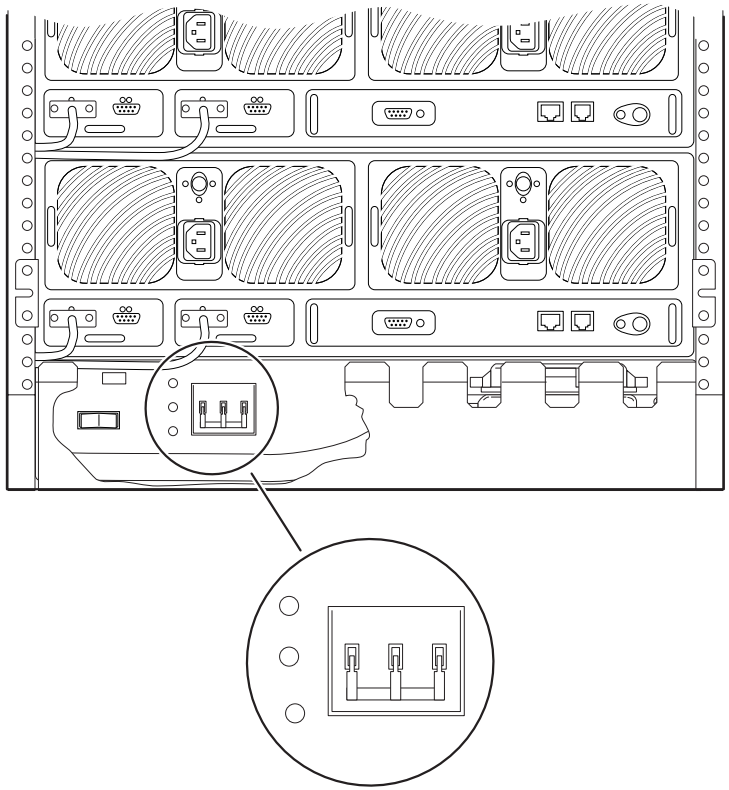

8 Power on the filer system.

a. At the front of the expansion cabinet, place the key in the keyswitch and turn it clockwise 90 degrees.

b. At the back of the expansion cabinet, power on the Sun StorEdge T3 Disk Trays and wait for the flashing LEDs on the front of the disk trays to light steady. Wait, this can take up to eight minutes for each disk tray.

c. At the back of the expansion cabinet, power on the Sun Enterprise 4500 and wait for the ok prompt to appear on the console monitor. This can take up to ten minutes depending on the components installed.

d. At the console, type `boot` at the `ok` prompt.

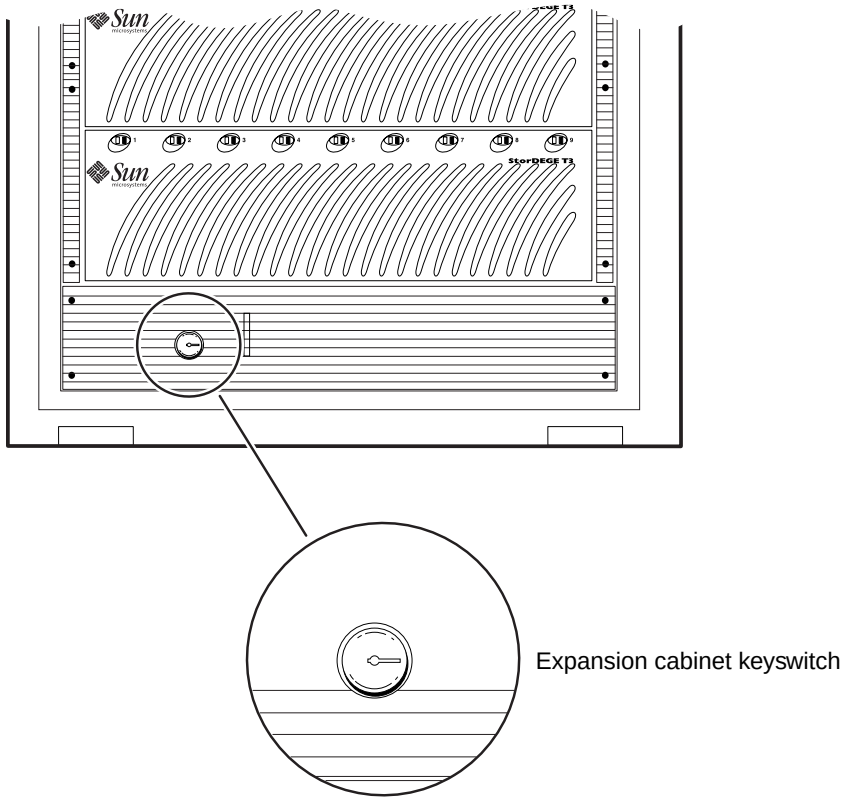

9 Refer to the filer documentation for procedures to perform the initial configuration and to verify the system.

- *Sun StorEdge N8600 Filer Release Notes Addendum*
- *Sun StorEdge N8600 Filer Release Notes*
- *Sun StorEdge N8600 Filer Installation, Configuration, and Service Guide*

These manuals are also on the *Sun StorEdge N8400 and N8600 Filer Documentation* CD.

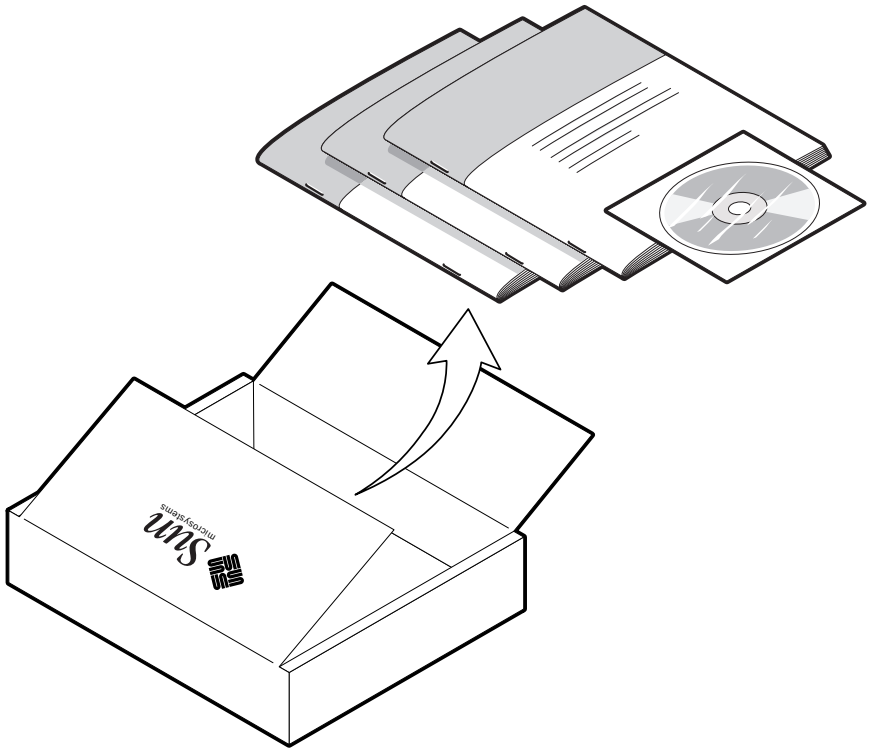

Copyright 2001 Sun Microsystems, Inc. All rights reserved. Use is subject to license terms. Third-party software, including font technology, is copyrighted and licensed from Sun suppliers. Sun, Sun Microsystems, the Sun logo, Sun StorEdge, and Sun Enterprise are trademarks of Sun Microsystems, Inc. in the U.S. and other countries. Federal Acquisitions: Commercial Software—Government Users Subject to Standard License Terms and Conditions.

Copyright 2001 Sun Microsystems, Inc. Tous droits réservés. Distribué par des licences qui en restreignent l'utilisation. Le logiciel détenu par des tiers, et qui comprend la technologie relative aux polices de caractères, est protégé par un copyright et licencié par des fournisseurs de Sun. Sun, Sun Microsystems, le logo Sun, Sun StorEdge, et Sun Enterprise sont des marques de fabrique de Sun Microsystems, Inc. aux Etats-Unis et dans d'autres pays.

Sun Microsystems, Inc.
901 San Antonio Road
Palo Alto, CA 94303
U.S.A. 650-960-1300

Part No. 816-2035-10
Revision A, July 2001