Tekelec EAGLE 5 SAS
Signaling Application System

Integrated Applications
Installation Manual

Table of Chapters

Table of Contents

List of Figures

List of Tables

List of Procedures

Chapter 1. Introduction

Chapter 2. Sentinel System Components

Appendix A. LEDs

Appendix B. Connectors

Appendix C. Cables

Appendix D. Power Cords to Peripherals

Index

910-0243-001 Revision B, November 2005

910-0243-001 Revision B, November 2005

Tekelec EAGLE® 5
Signaling Application System

Release 34.0

Integrated Applications - EAGLE 5 SAS

910-0243-001
Revision B, November 2005

TEKELEC

Copyright© 2005 Tekelec.
All Rights Reserved
Printed in U.S.A.

Notice
Information in this documentation is subject to change without notice. Unauthorized use or copying of this documentation can result in civil or criminal penalties.

Any export of Tekelec products is subject to the export controls of the United States and the other countries where Tekelec has operations.

No part of this documentation may be reproduced or transmitted in any form or by any means, electronic or mechanical, including photocopying or recording, for any purpose without the express written permission of an authorized representative of Tekelec.

Other product names used herein are for identification purposes only, and may be trademarks of their respective companies.

Trademarks
The Tekelec logo, EAGLE, G-Flex, G-Port, IP^7, IP^{7}Edge, IP^7 Secure Gateway, and TALI are registered trademarks of Tekelec, Inc. TekServer is a trademark of Tekelec, Inc. All other trademarks are the property of their respective owners.

Patents
This product is covered by one or more of the following U.S. and foreign patents:

U.S. Patent Numbers:

5,008,929, 5,953,404, 6,167,129, 6,324,183, 6,327,350, 6,606,379, 6,639,981, 6,647,113, 6,662,017, 6,735,441, 6,745,041, 6,765,990, 6,795,546, 6,819,932, 6,836,477, 6,839,423, 6,885,872

Ordering Information
Additional copies of this document can be ordered from:

Tekelec Network Signaling Division
Attention: Central Logistics
5200 Paramount Parkway
Morrisville, North Carolina, 27560

Or e-mail your request to *CentralLogistics@tekelec.com*.

Table of Contents

Chapter 1. Introduction

Safety Information 1-2
Admonishments and Conventions 1-2
Post-Installation Inspection 1-4
Introduction 1-6
Regulatory, Safety Compliance and Certification 1-7
Environmental Requirements 1-8
Temperature Variation 1-8
Relative Humidity 1-8
Elevation 1-8
Building Requirements 1-8
Scope and Audience 1-9
Signaling Products Systems 1-10
Integrated Application Products 1-11
Sentinel 1-11
Documentation 1-12
About this Manual 1-12
Related Publications 1-12
Documentation Packaging, Delivery, and Updates 1-20
References 1-20
Product Packaging and Delivery 1-21
Customer Assistance 1-21
Problem – Critical 1-22
Problem – Major 1-22
Problem – Minor 1-23
Response 1-23
Emergency Response 1-23
Hardware Repair and Return 1-24
Repair and Return Shipping Instructions 1-25
Specifically Targeted PCBs 1-27
Returning a Crate 1-27
Acronyms 1-29
Doc Assignments (from SW perspective) 1-35

Systems Components Overview 1-37
Module Installation 1-40
Hardware Operational Testing 1-40

Chapter 2. Sentinel System Components

Safety Information 2-3
Introduction 2-4
Installing Integrated Sentinel Hardware 2-5
Expanded 2-5
Breaker Panels 2-10
Break-Out Box 2-12
Ethernet Switches 2-13
Installation of Ethernet Switches 2-15
Routers 2-19
Servers Model 120 2-20
Server Model 120 Features 2-21
Adding Servers to the Netra-based ESP Frame 2-22
Integrated Sentinel ESP Cabling 2-26
Integrated Sentinel ESP TO-FROM Table 2-34
Installing Non-integrated Sentinel Hardware 2-38
Site Collector, i2000 Frame 2-42
Breaker Panels (2)(P/N 870-2248-04) 2-42
Site Collector, Break-Out Box 2-43
Hub 2-44
Flight Recorders 2-45
i2000 Shelves 2-47
Site Collector, i2000 Frame, Interconnect 2-50
Installng the Sentinel Server Frame 2-54
Server Frame, BP 2-56
Server Frame, Switch 2-56
Server Frame, Console Server 2-58
Server Frame, Interconnect 2-61
Packet Backplane Chassis 2-64
Taking ESD and Antistatic Precautions 2-65
PBC Handling the Chassis 2-66

Appendix A. LEDs

Circuit Card LEDs A-2
Introduction A-2

ATM E1/T1 Card P/N 870-2698-01 ..... A-2
ATM-LIM, AINF-LIM, E1-LIM, EILA, ILA A-3
DCM and DSM, Database Module A-4
E1/T1 MIM, ... A-5
General Purpose Service Module (GPSM-II) A-6
GR-376 Processor A-7
HMUX, High-Speed Multiplexer (Eagle STP only) A-8
MCAP, MAS Communications Applications Processor A-9
MDAL, Maintenance Disk and Alarm Card A-10
MPL-LIM, Multi-Port LIM A-11
MPLT, Multi-Port LIM with Taxi Component A-12
Integrated Applications LEDs A-13
Breaker Panel LEDs A-14
Host Server LEDs A-15
Hub LEDs A-16
Router LEDs A-17
Expanded (ESP) Ethernet Switches A-18
TAS, Tone and Announcement Server LEDs A-20

Appendix B. Connectors

Control Shelf Modules B-4
ACM/ASM/DCM/DSM/EILA/ILA/LIM/MPL/TSM Control Shelf Backplane Pin-Outs, Top Connector B-4
ACM/ASM/DCM/DSM/EILA/ILA/LIM/MPL/TSM Control Shelf Backplane Pin-Outs, Bottom Connector B-6
Extension Backplane (P/N 850-0356-01) B-9
Extension Shelf Backplane (P/N 850-0356-01) B-9
General Purpose Relay Connector 01 ..... B-10
General Purpose Relay Connector 02 ..... B-11
General Purpose Serial Interface B-12
Interface Backplane Control B-13
Interprocessor Message Multiplexer Control Shelf B-15
Control Shelf IPMX A Backplane P8 ..... B-15
Control Shelf IPMX B Backplane P24 ..... B-17
Interprocessor Message Multiplexer Extension Shelf B-20
Interprocessor Message Transport Connector B-22
Local Maintenance Center Alarm Backplane B-23
Power Connector Extension Backplane B-24

Power Connector Control Backplane B-25
Remote Maintenance Center Alarm Control Backplane B-26
Serial Port Control Backplane B-27
Shelf Power B-28
Shelf Power Connector P1, P2, P3 ..... B-28

Appendix C. Cables

Cables by Part Numbers C-1
Labeling C-4
Cable Labeling C-4
Introduction C-6
803-0029-01 MPL Card Diagnostic Cable C-7
804-0176-01 Converter C-7
804-1830-01 Coaxial Cable Adapter C-8
830-0224-xx Drive Power Cable C-9
830-0231-xx Local Maintenance Center Cable C-10
830-0232-xx Row Alarm Cable C-11
830-0233-xx Remote Maintenance Center Cable C-12
830-0257-xx Hazard Ground Cable C-13
830-0315-xx Power Cable C-14
830-0366-xx Interface Cable C-15
830-0421-xx CD ROM Cable C-16
830-0425-01 Adapter 15 Pin to 26 Pin C-17
830-0435-xx External Alarm Cable (Custom) C-18
830-0543-xx Alarm Holdover Clock Cable C-19
830-0527-xx RS232 ..... C-20
850-0514-01 Serial I/O Transition Card C-21
830-0531-03 Serial Interface Adapter/MODEM C-22
830-0531-01 Serial Interface Converter Cable C-23
830-0528-01 Terminal/Converter Cable C-24
830-0531-02 Serial Interface, Terminal and Printer Adapter C-25
830-0535-xx Terminal/Printer Cable C-26
830-0622-xx E1 Cable C-27
830-0624-xx BNC to BCN Cable Assembly, ... C-28
830-0625-xx BNC/Open End Cable C-29
830-0638-xx Filter Rack Alarm Cable C-30
830-0651-xx –48V Power Cable C-31
830-0680-01 RJ-11 to RJ-11 ..... C-32

830-0656-01 Fifty Position Hard Drive I/O Cable C-33
830-0708-xx MMI Port Cable..... C-34
830-0709-xx Modem/Terminal Cable..... C-35
830-0710-xx Network Cable C-36
830-0711-xx DCM, 100-BASE TX Interface C-37
830-0715-xx Ground Cable (2 Hole Lug)..... C-38
830-0723-xx Crossover (CAT-5) Cable..... C-39
830-0724-xx Data Cable (SXi rev D) C-40
830-0724-xx Straight Trough Cable (CAT-5) C-41
830-0759-xx Null Modem Cable C-42
830-0763-01 Loop Back Cable Adapter..... C-43
830-0772-xx Multi-Port LIM DS0 Cable..... C-44
830-0788-xx Straight Through, Patch Panel Cable..... C-45
830-0788-xx Router, Hub, Network GR-376 Cable C-45
830-0789-xx Crossover DCM Patch Panel Cable..... C-46
830-0788-xx Router, Hub, Network GR-376 Cable C-46
830-0814-xx Multi-Port Power Cable C-47
830-0822-01 Ground Cable C-48
830-0830-01 Ground Cable C-49
830-0846-01 High Speed Master Timing Adapter..... C-50
830-0849-xx DS1 Cable..... C-51
830-0859-xx Null-MODEM for Terminal C-52
830-0866-xx Breaker to Terminal Strip Power Cable..... C-53
830-0868-xx Power Cable..... C-54
830-0869-xx Router Power Cable..... C-55
830-0872-xx RAID Power Cable C-56
830-0892-xx Multi-Port DS0 Cable (24 AWG) C-57
830-0814-xx SXi Data Cable..... C-58
830-0857-01 HMUX Adapter Cable..... C-59
830-0884-01 Switch to Frame Ground Cable C-60
830-0888-xx RJ45/RJ45 Cable (Yellow)..... C-61
830-0889-xx RJ45/RJ45 (Blue) C-62
830-0894-xx T1 MIM LIM Cable C-63
830-0895-01 T1 LIM to MPL Cable Adapter C-64
830-0900-xx Alarm NETRA Server Cable C-65
830-0901-xx Tone and Announcement Server Alarm Cable C-66
830-0906-01 Serial IF Cable Rev A..... C-67

830-0907-xx Power Cable Rev A, ... C-68
830-0908-xx Power Ring C-69
830-0913-01 J1 Router Cable Rev B C-70
830-0913-02/03 Router Cable Rev B C-71
830-0917-01 RJ45 to 9 Pin, Adapter C-72
830-0948-xx E1/T1 MIM LIM Cable C-73
830-0949-xx E1/T1 MIM LIM to MPL Adapter C-74
830-0961-xx Serial Alarm Cable C-75
830-0963-xx DB9 F to DB15 M Serial Cable C-76
830-0965-xx Tekelec 1000 Power Cable C-77
830-0970-xx Null Modem Assembly Cable C-78
830-0972-01 Tekelec 1000 Serial DB44 to DB9 (X4) C-79
830-0959-01 ATM E1-T1 Cable C-80
830-0987-01 ATM E1-T1 Cable C-81
850-0496-01 Force Transition Card C-82
Fan Orientation Wiring Diagram Tekelec 1000 ..... C-83

Appendix D. Power Cords to Peripherals

International Power Cords D-2

Index

List of Figures

Figure 1-1. Removing Modules 1-40
Figure 2-1. EAGLE 5 SAS STP and Integrated Sentinel Diagram 2-5
Figure 2-2. Integrated Sentinel Frames 2-7
Figure 2-3. Netra-based ESP Maximum Configuration 2-8
Figure 2-4. Netra-based ESP Minimum Configuration Rear 2-9
Figure 2-5. Breaker Panel Front and Rear 2-11
Figure 2-6. Break-Out Box 2-12
Figure 2-7. Ethernet Switches Maximum Configuration 2-13
Figure 2-8. Ethernet Switches 2-15
Figure 2-9. Ethernet Switches Assembly 2-15
Figure 2-10. Ethernet Switches Ground Strap 2-17
Figure 2-11. Ethernet Switches Connections 2-18
Figure 2-12. Sentinel Router Front and Rear 2-19
Figure 2-13. Adding ESP Server to Frame 2-23
Figure 2-14. Adding a Server 2-23
Figure 2-15. Server Model 120 Front 2-24
Figure 2-16. Server Model 120, 1A and 1B Rear 2-24
Figure 2-17. Frame Ground Detail 2-25
Figure 2-18. Server Frame Ground 2-25
Figure 2-19. ESP BP Cabling 2-26
Figure 2-20. ESP Interconnect 2-27
Figure 2-21. ESP Interconnect 2-28
Figure 2-22. ESP Interconnect 2-29
Figure 2-23. ESP Interconnect 2-30
Figure 2-24. ESP Interconnect 2-31
Figure 2-25. Sentinel Probe 2-39
Figure 2-26. Site Collector, i2000 Frame 2-41
Figure 2-27. Site Collector, i2000 Frame 2-42
Figure 2-28. Break-Out Box Assembly 2-43
Figure 2-29. HUB (P/N 870-2224-01) 2-44
Figure 2-30. Flight Recorders A, B, and C Cabling 2-45
Figure 2-31. Site Collector Frame, i2000 Cabling 2-46

Figure 2-32. i2000 Shelf 2-47
Figure 2-33. i2000 Shelf Installation 2-48
Figure 2-34. Site Collector Frame, Rear 2-49
Figure 2-35. Site Collector, BP 2-50
Figure 2-36. Site Collector, Interconnect 2-51
Figure 2-37. Site Collector, Interconnect 2-52
Figure 2-38. Sentinel Server Frame 2-55
Figure 2-39. Ethernet Switch (P/N 804-1580-01) 2-56
Figure 2-40. Console Server 2-58
Figure 2-41. Sentinel Server Frame Console Server 2-58
Figure 2-42. Server Frame Console Server 2-58
Figure 2-43. Sentinel Server Frame Console Server 2-59
Figure 2-44. Server Frame, BP 2-61
Figure 2-45. Server Frame, Interconnect 2-62
Figure A-1. LIM LEDs A-3
Figure A-2. DCM LEDs A-4
Figure A-3. E1/T1 MIM (P/N 870-2198-01) A-5
Figure A-4. GPSM-II P/N 870-2360-01 ....A-6
Figure A-5. GR-376 LEDs A-7
Figure A-6. HMUX LEDs A-8
Figure A-7. MCAP LEDs A-9
Figure A-8. MDAL LEDs A-10
Figure A-9. MPL (P/N 870-2061-xx) LEDs A-11
Figure A-10. MPLT LEDs A-12
Figure A-11. Breaker Panel LEDs A-14
Figure A-12. Host Server LEDs A-15
Figure A-13. Hub Front View A-16
Figure A-14. Front View Routers A-17
Figure A-15. Rear View Isolation Router A-17
Figure A-16. Rear View Dial-in Router A-17
Figure A-17. Ethernet Switch A-18
Figure A-18. TAS - Front View A-20
Figure B-1. ACM/ASM/DCM/DSM/EILA/ILA/LIM/MPL/TSM Control Shelf Backplane Pin-Outs, Top Connector B-4
Figure B-2. ACM/ASM/DCM/DSM/EILA/ILA/LIM/MPL/TSM Control Shelf Backplane Pin-Outs, Bottom Connector B-6
Figure B-3. Extension Shelf Backplane (P/N 850-0356-01) B-9

Figure B-4. General Purpose Relay Connector 01 ..... B-10
Figure B-5. General Purpose Relay Connector 02 ..... B-11
Figure B-6. General Purpose Serial Interface Connector 01, GPSI B-12
Figure B-7. Interface Connector B-13
Figure B-8. Control Shelf IPMX A Backplane Pin-Outs B-15
Figure B-9. Control Shelf IPMX B Backplane Pin-Outs B-17
Figure B-10. IPMX Extension Shelf Backplane Connector P9 ..... B-20
Figure B-11. IMT Connector B-22
Figure B-12. Local Maintenance Center Alarm Connector B-23
Figure B-13. Power Connector B-24
Figure B-14. Power Connector B-25
Figure B-15. Remote Maintenance Center Alarm Connector B-26
Figure B-16. Serial Port Connector B-27
Figure B-17. Shelf Power Connector B-28
Figure C-1. Installer's Cable Running List Example C-4
Figure C-2. MPL Card Diagnostic Cable (P/N 803-0029-01) C-7
Figure C-3. Coaxial Cable Adapter P/N 804-1830-01 ..... C-8
Figure C-4. Drive Power Cable P/N 830-0224-xx C-9
Figure C-5. Local Maintenance Center Cable (P/N 830-0231-xx) C-10
Figure C-6. Row Alarm Cable P/N 830-0232-xx C-11
Figure C-7. Remote Maintenance Center Cable P/N 830-0233-xx C-12
Figure C-8. Hazard Ground Cable P/N 830-0257-xx C-13
Figure C-9. Power Cable (P/N 830-0315-xx) C-14
Figure C-10. Interface Cable P/N 830-0366-xx C-15
Figure C-11. CD ROM Cable P/N 830-0421-xx C-16
Figure C-12. Adapter 15 Pin to 26 Pin P/N 830-0425-01 ..... C-17
Figure C-13. External Alarm Cable (Custom) P/N 830-0435-xx C-18
Figure C-14. Alarm Holdover Clock Cable P/N 830-0543-xx C-19
Figure C-15. RS232 P/N 830-0527-xx C-20
Figure C-16. Serial I/O Transition Card P/N 850-0514-01 ..... C-21
Figure C-17. Serial Interface Adapter/MODEM P/N 830-0531-03 ..... C-22
Figure C-18. Serial Interface Converter Cable P/N 830-0531-01 ..... C-23
Figure C-19. Serial Interface, Adapter P/N 830-0531-02 ..... C-25
Figure C-20. Terminal/Printer Cable P/N 830-0535-xx C-26
Figure C-21. E 1 Cable P/N 830-0622-xx C-27
Figure C-22. Cable Assembly, BNC to BCN P/N 830-0624-xx C-28
Figure C-23. BNC/Open End Cable P/N 830-0625-xx C-29

Figure C-24. Filter Rack Alarm Cable P/N 830-0638-xx C-30
Figure C-25. –48V Power Cable P/N 830-0651-01 .....C-31
Figure C-26. RJ-11 to RJ-11 P/N 830-0680-01 .....C-32
Figure C-27. Fifty Position/Hard Drive IO P/N 830-0656-01 .....C-33
Figure C-28. Man-Machine Interface Port Cable P/N 830-0708-01 .....C-34
Figure C-29. Modem/Terminal Cable P/N 830-0709-xx C-35
Figure C-30. Network Cable P/N 830-0710-xx C-36
Figure C-31. DCM, 100-BASE TX Interface P/N 830-0711-xx C-37
Figure C-32. Ground Cable P/N 830-0715-xx C-38
Figure C-33. Crossover (CAT-5) Cable P/N 830-0723-xx C-39
Figure C-34. SXi Data Cable P/N 830-0724-xx rev D C-40
Figure C-35. Straight Through (CAT-5)(P/N 830-0724-xx) C-41
Figure C-36. Null Modem Cable P/N 830-0759-xx C-42
Figure C-37. Loop Back Cable Adapter P/N 830-0763-01 .....C-43
Figure C-38. Multi-Port LIM DS0 Cable P/N 830-0772-xx C-44
Figure C-39. Straight Through patch panel cable P/N 830-0788-xx C-45
Figure C-40. Patch Panel Crossover Cable (P/N 830-0789-xx) C-46
Figure C-41. Multi-Port Power Cable P/N 830-0814-xx C-47
Figure C-42. Ground Cable P/N 830-0822-01 .....C-48
Figure C-43. Ground Cable P/N 830-0830-01 .....C-49
Figure C-44. HS Master Timing Adapter P/N 830-0846-01 .....C-50
Figure C-45. DS1 Cable P/N 830-0849-xx C-51
Figure C-46. Null-MODEM for Terminal P/N 830-0859-01 .....C-52
Figure C-47. Power Cable to Breaker Strip P/N 830-0866-xx C-53
Figure C-48. Power Cable P/N 830-0868-xx C-54
Figure C-49. Router Power Cable P/N 830-0869-xx C-55
Figure C-50. RAID Power Cable P/N 830-0872-xx C-56
Figure C-51. Multi-Port DS0 P/N 830-0892-xx C-57
Figure C-52. SXi Data Cable P/N 830-0814-xx rev D C-58
Figure C-53. HMUX Adapter Cable P/N 830-0857-01 .....C-59
Figure C-54. Switch to Frame Ground Cable P/N 830-0884-01 .....C-60
Figure C-55. RJ45/RJ45 P/N 830-0888-xx C-61
Figure C-56. RJ45/RJ45 (P/N 830-0889-xx) C-62
Figure C-57. T1 MIM LIM Cable P/N 830-0894-xx C-63
Figure C-58. T1 LIM to MPL Cable Adapter P/N 830-0895-01 .....C-64
Figure C-59. Alarm NETRA Server Cable P/N 830-0900-xx C-65
Figure C-60. TAS Alarm Cable P/N 830-0901-xx C-66

Figure C-61. SXi Serial IF Cable P/N 830-0906-01 ..... C-67
Figure C-62. SXi Power Cable P/N 830-0907-xx rev A C-68
Figure C-63. Power Ring P/N 830-0908-xx C-69
Figure C-64. VXi J1 Router Cable P/N 830-0913-01 rev B C-70
Figure C-65. Router Cable P/N 830-0913-02/03 rev B C-71
Figure C-66. Adapter RJ45 to 9 Pin 830-0917-01 ..... C-72
Figure C-67. E1/T1 MIM LIM P/N 830-0948-xx C-73
Figure C-68. E1/T1 MIM LIM To MPL Adapter P/N 830-0949-xx C-74
Figure C-69. Serial Alarm Cable P/N 830-0961-xx C-75
Figure C-70. DB9 F to DB15 M Serial P/N 830-0963-xx C-76
Figure C-71. Power Cable Tekelec 1000 P/N 830-0965-XX C-77
Figure C-72. Assembly Null Modem Cable P/N 830-0970-xx C-78
Figure C-73. Serial DB44 to DB9 Tekelec 1000 P/N 830-0972-01 ..... C-79
Figure C-74. ATM E1/T1 Cable P/N 830-0959-XX C-80
Figure C-75. ATM Cable P/N 830-0987-01 ..... C-81
Figure C-76. Force Transition Card P/N 850-0496-01 ..... C-82
Figure C-77. Tekelec 1000 Fan Orientation Wiring Diagram C-83

List of Tables

Table 1-1. Safety Icons 1-2
Table 1-1. Sentinel Publications 1-18
Table 1-1. Basic RMA Types 1-24
Table 1-2. RMA Reasons for Return 1-24
Table 1-1. Documentation Abbreviation 1-35
Table 1-2. Components 1-37
Table 2-1. Safety Icons 2-3
Table 2-2. Tools and Equipment 2-3
Table 2-3. Frame and Server Naming Conventions 2-4
Table 2-4. Sentinel Server Frame Naming Conventions 2-4
Table 2-5. Breaker Panel LEDs 2-11
Table 2-6. Ethernet Switch LEDs. 2-14
Table 2-7. Router LEDs 2-19
Table 2-8. System Specifications. 2-21
Table 2-9. ESP Cable Specifications 2-32
Table 2-10. ESP Cable Specifications 2-33
Table 2-11. Integrated Sentinel ESP TO-FROM Table 2-34
Table 2-12. Upgrade Kit 2-37
Table 2-13. Site Collector Cable Specifications 2-53
Table 2-14. Server Frame, Acronyms 2-56
Table 2-15. Console Server, LEDs 2-60
Table 2-16. Server Frame, Legends A and B 2-63
Table A-1. Beaker Panel LED Description A-14
Table A-2. Host Server LED Descriptions A-15
Table A-3. Hub Front LEDs A-16
Table A-4. Routers - Front LEDs A-17
Table A-5. Routers - Rear LEDs A-17
Table A-6. Ethernet Server LEDs A-18
Table A-7. TAS LEDs A-20
Table B-1. Control Shelf Backplanes (P/N 850-0330-03/04 and P/N 850-0330-05/06) B-2

Table B-2. ACM/ASM/DCM/DSM/EILA/ILA/LIM/MPL/TSM Control Shelf Backplane Pin-Outs, Top Connector B-4
Table B-3. ACM/ASM/DCM/DSM/EILA/ILA/LIM/MPL/TSM Control Shelf Backplane Pin-Outs, Bottom Connector B-6
Table B-4. ACM/ASM/DCM/DSM/EILA/ILA/LIM/MPL/TSM Backplane Pin-Out Symbols B-7
Table B-5. General Purpose Relay Connector 01 ..... B-10
Table B-6. General Purpose Relay Connector 02 ..... B-11
Table B-7. General Purpose Serial Interface Connector 01, GPSI B-12
Table B-8. Interface Connector Pins and Signal B-13
Table B-9. Interface Connectors, Ports, and Card Slots B-14
Table B-10. Control Shelf IPMX A Backplane Pin-Outs B-15
Table B-11. Control Shelf IPMX B Backplane Pin-Outs B-17
Table B-12. IPMX Extension Shelf Backplane Pin-Outs P9 and P26 ..... B-20
Table B-13. IMT Connector Pins B-22
Table B-14. Local Maintenance Center Alarm Connector B-23
Table B-15. Power Connector B-24
Table B-16. Power Connector B-25
Table B-17. Remote Maintenance Center Alarm Connector B-26
Table B-18. Serial Port Connector B-27
Table B-19. Shelf Power Connector B-28
Table C-1. Local Maintenance Center Cable P/N 830-0231-xx C-10
Table C-2. Row Alarm Cable P/N 830-0232-xx C-11
Table C-3. Remote Maintenance Center Cable P/N 830-0233-xx C-12
Table C-4. Hazard Ground Cable P/N 830-0257-xx C-13
Table C-5. Power Cable P/N 830-0315-xx C-14
Table C-6. Interface Cable P/N 830-0366-xx C-15
Table C-7. RS232 P/N 830-0527-xx C-20
Table C-8. BNC to Open End P/N 830-0625-xx C-29
Table C-9. MMI Port Cable P/N 830-0708-xx C-34
Table C-10. Patch Panel Crossover P/N 830-0789-xx C-46
Table C-11. Null-MODEM for Terminal P/N 830-0859-xx C-52
Table C-12. Breaker Strip Power Cable P/N 830-0866-xx C-53
Table C-13. Router Power Cable P/N 830-0869-xx C-55
Table C-14. RAID Power Cable P/N 830-0872-xx C-56
Table C-15. RJ45/RJ45 Cable P/N 830-0888-xx C-61
Table C-16. RJ45/RJ45 Cable (P/N 830-0889-xx) C-62
Table C-17. Power Cable P/N 830-0908-xx C-69

Table 3-18. Tekelec 1000 Serial Pin Outs C-79
Table D-1. International Power Cords For Peripheral Equipment D-2

List of Procedures

RMA 1-25
Adding the Server to the Frame 2-22
Inspect System After Installation 1-4
Installing Switches 2-16
Mark and Label Cables C-4
Mounting the Console Server 2-59
Preparing Crate and Dolly for Return to Tekelec 1-28
Unpacking the PBC 2-66

1

Introduction

Safety Information 1–2
Post-Installation Inspection 1–4
Introduction 1–6
Regulatory, Safety Compliance and Certification 1–7
Environmental Requirements 1–8
Scope and Audience 1–9
Signaling Products Systems 1–10
Integrated Application Products 1–11
Documentation 1–12
About this Manual 1–12
Related Publications 1–12
Documentation Packaging, Delivery, and Updates 1–20
References 1–20
Product Packaging and Delivery 1–21
Customer Assistance 1–21
Hardware Repair and Return 1–24
Repair and Return Shipping Instructions 1–25
Acronyms 1–29

Safety Information

Admonishments and Conventions

Admonishments are icons and text throughout this manual that alert the reader and technical personnel to assure personal safety, to minimize possible service interruptions, and to warn of the potential for equipment damage. This manual has four admonishments, listed in descending order of priority.

NOTE: All personnel must be aware of and conform to the safety information provided in each "Safety Information" section of this manual.

Table 1-1. Safety Icons

	TOPPLE: (This icon and text indicate the possibility of ***personnel injury and equipment damage***.)
	DANGER: (This icon and text indicate the possibility of ***personnel injury***.)
	CAUTION: (This icon and text indicate the possibility of ***service interruption and personnel injury***.)
	WARNING: (This icon and text indicate the possibility of ***equipment damage and personnel injury***.)

TOPPLE: Always read and understand instructions thoroughly and completely before working on, moving, raising or lowering the frame, any portion of the frame, attachments to the frame or equipment.

TOPPLE: Never try to unpack any frame from the shipping container without at least two people to steady any movement of the frame and related components. At least two people are required to safely move and position any frame.

TOPPLE: Never pull out the shelf of any frame that is not anchored properly. Some frames are required to be attached to over head ladder racks before shelve are extended.

DANGER: No commercially AC powered equipment may be used or placed within 7 ft. of –48V equipment. This may create a shock or current loop that can be severely hazardous to personnel and equipment.

DANGER: *Do not* wear metal, chains, rings, watches, or jewelry *or* carry exposed metal, keys or tools in pockets when working on system equipment or other related electrostatic-sensitive components. Always wear a wrist strap or other electrostatic protection when handling printed circuit cards and other electrostatic-sensitive devices.

WARNING: *Do not* leave or allow unused metal objects, such as screws or washers, to remain anywhere within the equipment. Remove all unused material from the equipment

WARNING: *Do not* allow any metal shavings to remain in the equipment area. This may occur from over tightened screws or bolts. These small metal particles are hazardous to electronic equipment. Be careful not to over tighten screws or bolts.

WARNING: *Do not* use tie wraps on or above the top traverse arms on a frame. *Always* trim tie wrap flush and turn the trimmed tie wrap to the rear of the cable.

CAUTION: All personnel associated with the installation of these systems must adhere to all safety precautions and use required protection equipment, to avoid the possibility of injury to personnel, service degradation, and/or service interruption.

CAUTION: These are redundant systems to allow service during normal maintenance. When repairs require a total power disconnect, both input supply sources must be disconnected. This will cause service interruption and takes down the systems.

CAUTION: This equipment has a connection between the earthed conductor of the DC supply circuit and the earthing conductor.

CAUTION: The Branch Circuit Overcurrent Protection shall be rated min. -48V, max. 40A.

CAUTION: Equipment is to be installed in restricted access areas in accordance with articles 110-16, 110-17, and 110-18 of the National Electric Code, ANSI/NFPA 70.

CAUTION: A readily accessible disconnect device that is suitable, approved, and rated shall be incorporated in the field wiring.

CAUTION: Connect to a reliably grounded SELV source which is reliably earthed and electrically isolated from the AC source

CAUTION: Use only listed closed loop connectors for connection to the supply.

CAUTION: When some CPCI cards arrive from the manufacturer they may have a small plastic cover over the screws and/or the alignment ejector pins. Remove and discard these plastic covers. If inserting the cards takes an excessive amount of force, check for obstructions. Forcing the card into a slot may damage the ejector handle or pin.

Post-Installation Inspection

This section describes a general system inspection. Check the site to insure the site and system are clean, complete, and connected securely. Check all items listed on the post-installation list.

Procedure — Inspect System After Installation

Verify the following:

1. All items listed in the Equipment Specification have been installed.

2. Shipping container is properly packed with ramp and frame dollies and shipped to Tekelec.

3. Cabling is neatly installed and the labels are correct and easily readable.

4. Power cabling does not run through a cable rack.

5. Power cabling is not to be routed together with any other cables and has at least six inches of clearance.

6. Racks have protective paper between the rack and any cables that would otherwise touch the rack.

7. The main central office ground cable is correctly labeled and is marked "TO and "FROM" with the "Do Not Remove" tag installed on both ends of the cable at the central office grounding bar.

8. The –48VDC power feeds are correctly labeled at the central office power distribution panel. There should be an A feed and a B feed for each breaker panel and Fuse and Alarm Panel (FAP).

9. Any –48VDC returns are correctly labeled.

10. Systems are neat, clean, and level.

11. Earthquake bracing, if any, is properly installed.

12. Adequate floor clearances have been maintained.

13. Panels are correctly installed.

14. All cable connections are checked to ensure a tight and complete connection.

15. Cable sheets are properly filled out.

16. All documentation has been received and is available.

17. Terminals and printers connected to the system are operational.

18. Data information has been received and is properly stored.

19. Any attached modems are operational.

20. Any attached Media Access Units (MAUs) are operational with power indicator on.

Introduction

Products of Tekelec's Signaling Products include the EAGLE 5 SAS Signaling Transfer Point (STP) system, and Integrated Applications products, which include the Multi-Purpose Server (MPS) and Sentinel.

This *Signaling Products Integrated Applications Integrated Applications Installation Manual* provides installation information for Netra-based Sentinel components:

- *"Sentinel System Components"*
- *"LEDs"*
- *"Connectors"*
- *"Cables"*
- *"Power Cords to Peripherals"*

Refer to this manual to install components or the complete system. Components that apply to a particular system only, are clearly indicated. For information on Tekelec 1000-based Sentinel components, see the *Tekelec 1000 Hardware Manual and Tekelec 1100 Hardware Manual*. For MPS-based ELAP 4.0 and higher systems, see the *Tekelec 1100 Hardware Manual*.

For an overview of each system and their subsystems, details of standard and optional hardware components per system, and basic site engineering refer to the *Signaling Products Hardware Manual* included in your current Documentation Suite.

Regulatory, Safety Compliance and Certification

Tekelec products are tested to meet NEBS level 3 per Telcordia SR-3580 Issue 1, November 1995. Products in this manual conform to applicable Telcordia Electromagnetic Compatibility and Electrical Safety requirements in GR-1089-CORE; Issue 2, with Revision 1, February 1999 and applicable Physical Protection requirements in GR-63-CORE, Issue 2, April 2002.

Tekelec products comply with the relevant directives and harmonized standards in support of the products CE mark required in Europe. These products are in conformity with the requirements of RTTE Directive 1999/5/EC, Radio Telecommunications Terminal Equipment, as tested to the relevant standards identified in the Official Journal of the European Communities. These products are in conformity with the relevant standards in EMC directive 89/336/EEC.

These products comply with the relevant standards in Safety directive 73/23/EEC, supported by Certified Body (CB) Test Certificates US/5923/UL or US/5451/UL issued by the National Certification Body as tested to IEC 60950 with national differences for European countries.

These products are UL listed under UL File E200146 for USA and c-UL for Canada.

c UL US LISTED

CE

(GS) Germany

UL DE GS geprüfte Sicherheit

(D) Demko for Denmark,

D

Additional country marks will be added pending reviews.

Environmental Requirements

The environmental conditions for the system must be maintained to the following specifications:

Temperature Variation

Typical environmental conditions are temperature and humidity controlled. With loss of environmental control the equipment covered in this manual complies with these conditions:

- Operating: 5° C to 40° C (41° F to 104° F)
- Exceptional Operating Limit: -5° C to 50° C (23° F to 122° F) (no more than 96 hours duration at extremes and at elevations less than 1800m)
- Storage: -5° C to 50° C (23° F to 122° F)

Relative Humidity

- Operating: 5% to 85% non-condensing (maximum absolute humidity of 0.024 kg of water per kg of dry air)
- Short Term Operating: 5% to 90% non-condensing (maximum absolute humidity of 0.024 kg of water per kg of dry air)

Elevation

- Operating: 60m below sea level at ambient temperature of 30° C to +4000m above sea level at ambient temperature of 40° C.

Building Requirements

The building requirements are standard telephony industry requirements for equipment installation.

The building must provide a clear, uncluttered route between the loading/receiving dock and the planned location. In order to move the equipment to the proper location, recommend hall clearance is at least 4.5 feet, (1.4 meters) wide by 8 feet, (2.4. meters) tall.

Four feet, (1.2 meter) side aisles should be used to allow maneuvering frames into place and provide ample work space around the equipment.

Scope and Audience

This *Signaling Products Integrated Applications Installation Manual* is intended for qualified technical installation and test personnel that must have thorough knowledge of telecommunication installation specifications, procedures, and equipment standards.This manual covers only Netra-based Sentinel components and Netra-based MPS components; for infomation in Tekelec 1000-based Sentinel components, see the *Tekelec 1000 Application Server Hardware Manual.* For *Tekelec 1100-based MPS servers used in ELAP 4.0 and higher systems, see the Tekelec 1100 Application Server Hardware Manual.*

NOTE: All personnel must be aware of and conform to the safety information provided starting on page 1-2.

This manual does not attempt to cover all testing or system software.

Hardware operational testing is designed to verify the functionality of the finalized construction of the hardware at the customer site. The demarcation line for the testing is up to and including the patch panel directly connected to the system. All installations are site specific, therefore a comprehensive site survey is necessary for all installations.

For hardware descriptions or basic site engineering information, refer to the *Tekelec Signaling Products Hardware Manual* and the *Tekelec 1000 Hardware Manual and Tekelec 1100 Hardware Manual* included with your system documentation. For replacement procedures of existing hardware components, refer to the *Maintenance Manual* included with your system documentation.

Signaling Products Systems

The Signaling Products Integrated Applications Installation Manual describes the following *Signaling Products* systems:

- Integrated Sentinel
- Non-Integrated Sentinel (Probed) Sentinel Collector and Server Frames

Integrated Application Products

Integrated Application products use Commercial Off-The-Shelf (COTS) components configured in a Tekelec frame. Systems are configured at Tekelec for NEBS compliance and typically have redundant components for reliability and maintainability. Integrated Application systems support application-specific services that interact with the SS7 and IP networks. For information on Tekelec's Multi-purpose Server (MPS) used in EPAP 5.0 and higher and ELAP 4.0 and higher systems, see the *EAGLE 5 SAS with TekServer MPS Platform Software and Maintenance Manual.*

Sentinel

The Integrated Sentinel™ system (probeless) with special provisioning procedures for EAGLE 5 SAS® requires at least one ESP node to transfer information to the Integrated Sentinel server for 32 links at a maximum of .8 Erlang (N+1=17 ESP nodes for a maximum 1500 monitored link system).

The Non-Integrated Sentinel™ system (probe) with special provisioning procedures for other Non EAGLE 5 SAS SS7 connections allows transfer information. Non - Integrated Sentinel system, probe = Non-EAGLE 5 SAS, customer supplied Signaling System # 7 (SS7) equipment + a combination of Flight Recorders and I2000 servers.

Sentinel is a complete network monitoring and diagnostic system that gives service providers total visibility of and access to their SS7 and Internet Protocol (IP) networks. Sentinel includes network surveillance capabilities and fault-management functions. Sentinel features a Call Detail Record (CDR) generation system that uses raw network traffic on the links to generate CDR data for use in various business intelligence applications. Sentinel can also work in conjunction with other monitoring systems and Expanded . The Sentinel is a factory-configured system in the heavy duty frame.

Documentation

About this Manual

This section describes the organization, safety issues, and conventions used throughout the *Signaling Products Integrated Applications Installation Manual*.

This document is organized into the following chapters:

- Chapter 1, *Introduction* provides information about the manual, Tekelec products, and installation support.
- Chapter 2, *Sentinel System Components* describes the Expanded (ESP) including hardware, assemblies and cables.
- Appendix A, *LEDs* provides Light Emitting Diode (LED) information.
- Appendix B, *Connectors* provides information on connectors
- Appendix C, *Cables* provides information on cables
- Appendix D, *Power Cords to Peripherals* provides information on power cords for peripherals

Related Publications

The *Integrated Applications Installation Manual* is part of the EAGLE 5 SAS documentation set and may refer to one or more of the feollowing manuals:

- The *Commands Manual* contains procedures for logging into or out of the EAGLE 5 SAS, a general description of the terminals, printers, the disk drive used on the system, and a description of all the commands used in the system.
- The *Commands Pocket Guide* is an abridged version of the *Commands Manual*. It contains all commands and parameters, and it shows the command-parameter syntax.
- The *Commands Quick Reference Guide* contains an alphabetical listing of the commands and parameters. The guide is sized to fit a shirt-pocket.
- The *Commands Error Recovery Manual* contains the procedures to resolve error message conditions generated by the commands in the *Commands Manual*. These error messages are presented in numerical order.

- The *Database Administration Manual – Features* contains procedural information required to configure the EAGLE 5 SAS to implement these features:
  - X.25 Gateway
  - STP LAN
  - Database Transport Access
  - GSM MAP Screening
  - EAGLE 5 SAS Support for Integrated Sentinel
- The *Database Administration Manual - Gateway Screening* contains a description of the Gateway Screening (GWS) feature and the procedures necessary to configure the EAGLE 5 SAS to implement this feature.
- The *Database Administration Manual – Global Title Translation* contains procedural information required to configure an EAGLE 5 SAS to implement these features:
  - Global Title Translation
  - Enhanced Global Title Translation
  - Variable Length Global Title Translation
  - Interim Global Title Modification
  - Intermediate GTT Load Sharing
  - ANSI-ITU-China SCCP Conversion
- The *Database Administration Manual - IP7 Secure Gateway* contains procedural information required to configure the EAGLE 5 SAS to implement the SS7-IP Gateway.
- The *Database Administration Manual – SEAS* contains the EAGLE 5 SAS configuration procedures that can be performed from the Signaling Engineering and Administration Center (SEAC) or a Signaling Network Control Center (SNCC). Each procedure includes a brief description of the procedure, a flowchart showing the steps required, a list of any EAGLE 5 SAS commands that may be required for the procedure but that are not supported by SEAS, and a reference to optional procedure-related information, which can be found in one of these manuals:
  - Database Administration Manual – Gateway Screening
  - Database Administration Manual – Global Title Translation
  - Database Administration Manual – SS7

- The *Database Administration Manual – SS7* contains procedural information required to configure an EAGLE 5 SAS to implement the SS7 protocol.
- The *Database Administration Manual – System Management* contains procedural information required to manage the EAGLE 5 SAS database and GPLs, and to configure basic system requirements such as user names and passwords, system-wide security requirements, and terminal configurations.
- The *Dimensioning Guide for EPAP Advanced DB Features* is used to provide EPAP planning and dimensioning information. This manual is used by Tekelec personnel and EAGLE 5 SAS customers to aid in the sale, planning, implementation, deployment, and upgrade of EAGLE 5 SAS systems equipped with one of the EAGLE 5 SAS EPAP Advanced Database (EADB) Features.
- The *ELAP Administration Manual* defines the user interface to the EAGLE 5 SAS LNP Application Processor on the MPS/ELAP platform. The manual defines the methods for accessing the user interface, menus, screens available to the user and describes their impact. It provides the syntax and semantics of user input, and defines the output the user receives, including information and error messages, alarms, and status.
- The *EPAP Administration Manual* describes how to administer the EAGLE 5 SAS Provisioning Application Processor on the MPS/EPAP platform. The manual defines the methods for accessing the user interface, menus, and screens available to the user and describes their impact. It provides the syntax and semantics of user input and defines the output the user receives, including messages, alarms, and status.
- The *Feature Manual - EIR* provides instructions and information on how to install, use, and maintain the EIR feature on the Multi-Purpose Server (MPS) platform of the EAGLE 5 SAS. The feature provides network operators with the capability to prevent stolen or disallowed GSM mobile handsets from accessing the network.
- The *Feature Manual - G-Flex C7 Relay* provides an overview of a feature supporting the efficient management of Home Location Registers in various networks. This manual gives the instructions and information on how to install, use, and maintain the G-Flex feature on the Multi-Purpose Server (MPS) platform of the EAGLE 5 SAS.
- The *Feature Manual - G-Port* provides an overview of a feature providing the capability for mobile subscribers to change the GSM subscription network within a portability cluster while retaining their original MSISDNs. This manual gives the instructions and information on how to install, use, and maintain the G-Port feature on the Multi-Purpose Server (MPS) platform of the EAGLE 5 SAS.

- The *Feature Manual - INP* provides the user with information and instructions on how to implement, utilize, and maintain the INAP-based Number Portability (INP) feature on the Multi-Purpose Server (MPS) platform of the EAGLE 5 SAS.
- The *FTP-Based Table Retrieve Application (FTRA) User Guide* describes how to set up and use a PC to serve as the offline application for the EAGLE 5 SAS FTP Retrieve and Replace feature.
- The *Hardware Manual* - EAGLE 5 SAS contains hardware descriptions and specifications of Tekelec's signaling products. These include the EAGLE 5 SAS, OEM-based products such as the ASi 4000 Service Control Point (SCP), the Netra-based Multi-Purpose Server (MPS), and the Integrated Sentinel with Extended Services Platform (ESP) subassembly.

  The Hardware Manual provides an overview of each system and its subsystems, details of standard and optional hardware components in each system, and basic site engineering. Refer to this manual to obtain a basic understanding of each type of system and its related hardware, to locate detailed information about hardware components used in a particular release, and to help configure a site for use with the system hardware.
- The *Hardware Manual - Tekelec 1000 Application Server* provides general specifications and a description of the Tekelec 1000 Application Server (T1000 AS). This manual also includes site preparation, environmental and other requirements, procedures to physically install the T1000 AS, and troubleshooting and repair of Field Replaceable Units (FRUs).
- The *Hardware Manual - Tekelec 1100 Application Server* provides general specifications and a description of the Tekelec 1100 Application Server (T1000 AS). This manual also includes site preparation, environmental and other requirements, procedures to physically install the T1100 AS, and troubleshooting and repair of Field Replaceable Units (FRUs).
- The *Installation Manual* - EAGLE 5 SAS contains cabling requirements, schematics, and procedures for installing the EAGLE 5 SAS along with LEDs, Connectors, Cables, and Power Cords to Peripherals. Refer to this manual to install components or the complete systems.
- The *Installation Manual - Integrated Applications* provides the installation information for integrated applications such as EPAP 4.0 or earlier (Netra-based Multi-Purpose Server (MPS) platform) and Sentinel. The manual includes information about frame floors and shelves, LEDs, connectors, cables, and power cords to peripherals. Refer to this manual to install components or the complete systems.

- The *LNP Database Synchronization Manual - LSMS with* EAGLE 5 SAS describes how to keep the LNP databases at the LSMS and at the network element (the EAGLE 5 SAS is a network element) synchronized through the use of resynchronization, audits and reconciles, and bulk loads. This manual is contained in both the LSMS documentation set and in the EAGLE 5 SAS documentation set.
- The *LNP Feature Activation Guide* contains procedural information required to configure the EAGLE 5 SAS for the LNP feature and to implement these parts of the LNP feature on the EAGLE 5 SAS:
  - LNP services
  - LNP options
  - LNP subsystem application
  - Automatic call gapping
  - Triggerless LNP feature
  - Increasing the LRN and NPANXX Quantities on the EAGLE 5 SAS
  - Activating and Deactivating the LNP Short Message Service (SMS) feature
- The *Maintenance Manual* contains procedural information required for maintaining the EAGLE 5 SAS and the card removal and replacement procedures. The *Maintenance Manual* provides preventive and corrective maintenance procedures used in maintaining the different systems.
- The *Maintenance Pocket Guide* is an abridged version of the Maintenance Manual and contains all the corrective maintenance procedures used in maintaining the EAGLE 5 SAS.
- The *Maintenance Emergency Recovery Pocket Guide* is an abridged version of the Maintenance Manual and contains the corrective maintenance procedures for critical and major alarms generated on the EAGLE 5 SAS.
- The *MPS Platform Software and Maintenance Manual* - EAGLE 5 SAS *with Tekelec 1000 Application Server* describes the platform software for the Multi-Purpose Server (MPS) based on the Tekelec 1000 Application Server (T1000 AS) and describes how to perform preventive and corrective maintenance for the T1000 AS-based MPS. This manual should be used with the EPAP-based applications (EIR, G-Port, G-Flex, and INP).

- The *MPS Platform Software and Maintenance Manual* - EAGLE 5 SAS *with Tekelec 1100 Application Server* describes the platform software for the Multi-Purpose Server (MPS) based on the Tekelec 1100 Application Server (T1100 AS) and describes how to perform preventive and corrective maintenance for the T1100 AS-based MPS. This manual should be used with the ELAP-based application (LNP).
- The *Provisioning Database Interface Manual* defines the programming interface that populates the Provisioning Database (PDB) for the EAGLE 5 SAS features supported on the MPS/EPAP platform. The manual defines the provisioning messages, usage rules, and informational and error messages of the interface. The customer uses the PDBI interface information to write his own client application to communicate with the MPS/EPAP platform.
- The *Previously Released Features Manual* summarizes the features of previous EAGLE, EAGLE 5 SAS, and IP^7 Secure Gateway releases, and it identifies the release number of their introduction.
- The *Release Documentation* contains the following documents for a specific release of the system:
  - — *Feature Notice* - Describes the features contained in the specified release. The Feature Notice also provides the hardware baseline for the specified release, describes the customer documentation set, provides information about customer training, and explains how to access the Customer Support website.
  - — *Release Notice* - Describes the changes made to the system during the lifecycle of a release. The Release Notice includes Generic Program Loads (GPLs), a list of PRs resolved in a build, and all known PRs.

    NOTE: The *Release Notice* is maintained solely on Tekelec's Customer Support site to provide you with instant access to the most up-to-date release information.
  - — *System Overview* - Provides high-level information on SS7, the IP7 Secure Gateway, system architecture, LNP, and EOAP.
  - — *Master Glossary* - Contains an alphabetical listing of terms, acronyms, and abbreviations relevant to the system.
  - — *Master Index* - Lists all index entries used throughout the documentation set.
- The *System Manual – EOAP* describes the Embedded Operations Support System Application Processor (EOAP) and provides the user with procedures on how to implement the EOAP, replace EOAP-related hardware, device testing, and basic troubleshooting information.

Table 1-1 provides a road map of the publications that contain information on Sentinel features, procedures, and components. The table arranges the documents in the following groups: general documents, software manuals, hardware/Integrated Applications Installation Manuals, and technical reference documents.

Table 1-1. Sentinel Publications

Publication	Describes
General Documents	
Sentinel Feature Guide	Provides an overview of the Sentinel System and describes each feature, component, and application of the Sentinel System.
Feature Notice	Describes the features contained in the specified release.
Release Notice	Describes the changes made to the system for the specified release. Includes a report of known and resolved problem reports. The Release Notice also provides a list of run-time software licenses and instructions for accessing the Tekelec Web site.
Software Manuals	
Sentinel User's Manual	Provides procedural information intended for users who do not have administrative privileges to the monitoring functions of Sentinel. The following functions are covered: Base Sentinel Server functions, Protocol Analysis, Traffic Surveillance, Monitor Link Status, and Event Message Reports.
Sentinel System Administrator's Guide	Provides procedures for administering and provisioning the Sentinel system. The manual is divided into sections for Probed Sentinel, Probeless Sentinel, and common components. The manual is intended for system administrators.
Data Collection Applications Manual	Provides an overview of the Call Detail Records/Transaction Data Records, Usage Measurement Data Feeds, the Mass Call Detection, and Loop Detection applications. Describes how to provision the above applications and how to generate the reports that the above applications provide.
Alarms Reference and User's Manual	Includes introductory and overview information, lists the various alarms generated by Sentinel, provides system administrator configuration information, contains detailed information about using the SAMS graphical user interface, and describes the optional Alarm Forwarding System.

Table 1-1. Sentinel Publications (Continued)

Publication	Describes
Sentinel Hardware and Integrated Applications Installation Manuals	
Tekelec Signaling Products Integrated Applications Integrated Applications Installation Manual	Provides installation information for each system in the Network Signaling Division.
Tekelec Signaling Products Hardware Manual	Describes each system and subsystem in the Network Signaling Division. Includes details of the standard and optional hardware components in each system. See Chapter 5 for information on the Sentinel system.
Tekelec 1000 Hardware Manual and Tekelec 1100 Hardware Manual	Provides general specifications and a description of the Tekelec 1000. This manual also includes site preparation, environmental and other requirements, procedures to physically install the Tekelec 1000, and troubleshooting and repair of Field Replaceable Units (FRUs). In Sentinel, The ESP and the Traffic Database Server can be hosted on the Tekelec 1000.
Signaling/Cellular Generic Hardware Reference	Describes the Basic Hardware Configuration (BHC)/SNAP shelf. The manual is intended for personnel who install or maintain the BHC.
i3000 Hardware Reference	Describes the i3000 hardware. The manual is intended for personnel who install or maintain the i3000 hardware.
Technical Reference Documents	
Data Collection Subsystem: Collection and Delivery	Provides an overview of the Sentinel Data Collection subsystem and its interface to the Service Application Platform.
Sentinel Data Collection Subsystem: ANSI ISUP CDR Data Feed	Describes the interface of the ANSI ISUP Data Feed to the Service Application Platform. Also describes the format of the ANSI ISUP CDR data feed file.
Sentinel Data Collection Subsystem: ITU ISUP CDR Data Feed	Describes the interface of the ITU ISUP Data Feed to the Service Application Platform. Also describes the format of the ITU ISUP CDR data feed file.

Table 1-1. Sentinel Publications (Continued)

Publication	Describes
Sentinel Data Collection Subsystem: LIDB TDR Data Feed	Describes the interface of the LIDB Data Feed to the Service Application Platform. Also describes the format of the LIDB TDRs data feed file.
Sentinel Data Collection Subsystem: Peg Counter Data Feed File Format	Describes the interface of the Peg Counter (Usage Measurement) Data Feed to the Service Application Platform. Also describes the format of Peg Counter data feed file.

Documentation Packaging, Delivery, and Updates

Customer documentation is provided with each system in accordance with the contract agreements. Customer documentation is upgraded whenever significant changes that affect system operation or configuration are made. Customer documentation updates may be issued in the form of an addendum, or a reissue of the affected documentation. The document part number is shown on the title page along with the current revision of the document, the date of publication, and the software release that the document covers. The bottom of each page contains the document part number and the date of the publication. Two types of releases are major software releases and maintenance releases. Maintenance releases are issued as addenda with a title page and change bars. On the changed pages, the date and document part number are changed. On any unchanged pages that accompany the changed pages, the date and the document part number are changed.

In the event a software release has minimum effect on documentation, an addendum is provided. The addendum provides an instruction page, a new title page, a change history page, and replacement chapters bearing the date of publication, the document part number, and change bars.

If a new release has a major impact on documentation, such as a new feature, the entire documentation set is reissued with a new part number and a new release number.

References

The following document is referenced in this manual:

[1] *TL 9000 Quality Management System Requirements Handbook, Release 3.0, QuEST Forum, March 2001*.

Product Packaging and Delivery

DANGER: At least two people are required to safely move and position any frame.

Before opening any shipping container, inspect for evidence of damage during shipment. Report any damage to the carrier for investigation and possible claims. Also report any damage to the Tekelec site supervisor.

Check the packing slips against the equipment specification list for this installation site. Report any discrepancies to Tekelec Production Control at 1-888-673-4827, or if necessary, call 919-460-2150 inside the USA.

Inventory the shipment to make sure that all items listed on the pick list have been received in good condition. Report any discrepancies or damaged equipment by calling 1-888-673-4827.

TEKELEC

Attn: RMA Department

5200 Paramount Parkway

Morrisville, NC 27560

RMA#: <assigned by Tekelec>

Customer Assistance

The Customer Care Center offers a point of contact through which customers can receive support for problems that may be encountered during the use of Tekelec's products. The Customer Care Center is staffed with highly trained engineers to provide solutions to your technical questions and issues seven days a week, twenty-four hours a day. A variety of service programs are available through the Customer Care Center to maximize the performance of Tekelec products that meet and exceed customer's needs.

To receive technical assistance, call the Customer Care Center at one of the following locations:

- Tekelec, USA
  Phone (US and Canada) +1 888-FOR-TKLC
  Phone (international) +1 919-460-2150
  Fax +1-919-460-0877
  Email: support@tekelec.com
- Tekelec, Europe and UK
  Phone +44 1784 467 804
  Fax +44 1784 477 120
  Email: ecsc@tekelec.com

Once a Customer Service Request (CSR) is issued, Technical Services, along with the customer, determines the classification of the trouble.

Problems are reported using problem criteria, as defined in the following sections and "TL-9000 Quality System Metrics (Book Two, Release 3.0)"

The following sections list Problem Criteria, as defined in this document.

Problem – Critical

Critical problems severely affect service, capacity/traffic, billing, and maintenance capabilities and requires immediate corrective action, regardless of time of day or day of the week, as viewed by a customer upon discussion with the supplier. For example:

- A loss of service that is comparable to the total loss of effective functional capacity of an entire switching or transport system.
- A reduction in capacity or traffic handling capacity such that expected loads cannot be handled.
- Any loss of safety or emergency capability (for example, 911 calls).

Problem – Major

Major problems cause conditions that seriously affect system operations, maintenance, and administration, etc., and require immediate attention as viewed by the customer upon discussion with the supplier. The urgency is less than in a critical situations because of a lesser immediate or impending effect on system performance, customer, and the customer's operation and review. For example:

- Reduction in any capacity/traffic measurement function
- Any loss of functional visibility and/or diagnostic capability
- Short outage equivalent to system or subsystem outages, with accumulated duration of greater than two minutes in any 24-hour period, or that continue to repeat during longer periods
- Repeated degradation of DS1 or higher rate spans or connections
- Prevention of access for routine administrative activity
- Degradation of access for maintenance or recovery operations
- Degradation of the system's ability to provide any required critical or major trouble notification
- Any significant increase in product related customer trouble reports
- Billing error rates that exceed specifications
- Corruption of system or billing databases

Problem – Minor

Other problems that a customer does not view as critical or major are considered minor. Minor problems do not significantly impair the functioning of the system and do not significantly affect service to customers. These problems are tolerable during system use.

Engineering complaints are classified as minor unless otherwise negotiated between the customer and supplier.

Response

If a critical problem exists, emergency procedures are initiated (see "Emergency Response"). If the problem is not critical, information regarding the serial number of the system, Common Language Location Identifier (CLLI), and initial problem symptoms and messages is recorded and a primary Technical Support engineer is assigned to work the Customer Service Report (CSR) and provide a solution to the problem. The CSR is closed when problem has been resolved.

Emergency Response

In the event of a critical service situation, emergency response is offered by Tekelec Technical Services.

Call 24 hours a day, 7 days a week

- Tekelec, USA
  Phone (US and Canada) +1 888-FOR-TKLC
  Phone (international) +1 919-460-2150
  Fax +1-919-460-0877
  Email: support@tekelec.com
- Tekelec, Europe and UK
  Phone +44 1784 467 804
  Fax +44 1784 477 120
  Email: ecsc@tekelec.com

Emergency response provides immediate coverage, automatic escalation, and other features to ensure a rapid resolution to the problem.

Hardware Repair and Return

Any system components being returned for repair or replacement must be processed through the Tekelec Return Material Authorization (RMA) procedures. A hardware repair is defined as an item returned to Tekelec due to a failure, with the returned item being repaired and returned to the customer. It is essential that serial numbers are recorded correctly. RMAs cannot be created without a valid serial number. All repair and quality information is tracked by serial number. Table 1-1 lists the basic RMA types.

Table 1-1. Basic RMA Types

Replacement Type	Description	Turnaround
Priority Advance Replacement	Customer requests the URGENT replacement of a damaged product	Same Day Shipment
Advance Replacement	Customer request the replacement of a damaged product	Shipment Within 3 Business Days
Repair/Return	Customer will return a damaged product for repair	Shipment Within 5 Days After Receipt
Expendable	A damaged part, such as a cable, is replaced, but the Customer does not return the damaged product	Depends on Urgency - Shipment Within 3 Business Days

Table 1-2 lists the RMA return reasons.

Table 1-2. RMA Reasons for Return

Reason for Return	Description
Damaged by Environment	Product damaged by environmental phenomena such as water damage or earthquake
Damaged in Shipment	Damaged between shipment from Tekelec and receipt at the Customer's installation site.
DOA – Dead on Arrival	Product is not functional when it is first installed at the Customer's location.
Lab Return	Products returned from lab sites.
Product Capture	Defect to be captured by Quality or Engineering (not Product Recall).
Product Deficiency	Anything wrong with the part that doesn't fall into another category.
Product Recall	Products recalled by divisions for the repair of a defect or replacement of defective products.
Return – No Product Deficiency	Anything returned without the product being defective.

Repair and Return Shipping Instructions

All returned equipment, assemblies, or subassemblies must be shipped to the Tekelec Repair and Return Facility specified by the Technical Services engineer. The item being returned must be shipped in the original carton or in an equivalent container assuring proper static handling procedures and with the freight charges prepaid.

The assigned RMA number must be clearly printed on the "RMA#:" line of the shipping label on the outside of the shipping package. If the RMA number is not placed on the label, the return could be delayed.

Procedure- RMA

1 Obtain and confirm the following information before contacting the Tekelec Customer Contact Center:

- Your name:
- Company name:
- Call-back number:
- Email address:
- Which product you are calling about?
- Site location:
- CLLI number
- System serial number (NT, CE, LM, DS, etc…):
- Complete software release (e.g., 28.0.1-41.53.0):
- Upgrade forms
  WI005153
  WI005154
  WI005218

WI005219
WI005220

- Tekelec card type: (e.g., ILA, MPL, DSM, etc):
- Tekelec card part number (870-####-##):
- Associated serial number (102########):
- Reason for return or replacement (isolated from system):
- Full name of person the replacement card is being shipped to:
- Shipping address:

NOTE: If possible, include associated alarms (UAMs) and a copy of the associated output (capture file).

---

2 Contact the Customer Care Center and request a Return of Material Authorization (RMA).

Reference: "*Customer Assistance*" on page 21.

---

3 If the item is a like-for-like advance replacement, the Technical Services engineer arranges for shipment of the replacement item to the customer.

a Wait for the replacement component to arrive.

b Package the defective component in the box of materials you received with your replacement. Use proper static handling procedures.

c Label the outside and inside of the box with your RMA number clearly visible. Place the packing slip from the received replacements on the inside of your box.

d Ship the defective component to the return address listed on the packing slip.

---

4 If the item is a repair/return, the Technical Services engineer arranges for shipment of the replacement item to the customer.

a Package the defective component in a suitable package for shipping. Use proper static handling procedures.

b Label the outside and inside of the box with your RMA number clearly visible. Include a packing slip with all the information from Step 1 along with the RMA number.

c Ship the defective component to the following address:

TEKELEC

Attn: RMA Department

5200 Paramount Parkway

Morrisville, NC 27560

RMA#: <assigned by Tekelec>

d Wait for the repaired component to arrive.

Specifically Targeted PCBs

Manufacturing may be involved in the investigations. In certain unique circumstances the capture of an individual PCB, for evaluation, can be initiated through a customer request.

For any reason the Director of Quality (QA), with input from other groups such as NSG Customer Service, Hardware Systems, Repair and Maintenance Support (RMS) and/or Manufacturing, can authorize a board type to be "captured" and sent to the North Carolina facility for evaluation and analysis. NSG QA receives the board(s), records board information such as part number, serial number, and problem description on the appropriate forms. Next, NSG sends the PCB to a Hardware Systems representative who initiates the design engineering evaluation. Once the evaluation and repair, if applicable, is complete, the results are documented and the PCB returned to NSG QA.

Returning a Crate

Use the following procedure to return a shipping crate and dollies to Tekelec.

Procedure — Preparing Crate and Dolly for Return to Tekelec

1. Replace the retaining brace.

2. Replace the shipping container front panel using the bolts saved previously and arrange the return shipment by contacting:

   Shipping Manager
   TEKELEC

   Attn: RMA Department

   5200 Paramount Parkway

   Morrisville, NC 27560

   RMA#: <assigned by Tekelec>

3. After the frame is positioned and the dollies are removed from the frame, the dollies are returned to the same address as the shipping container listed above.

If the equipment is being immediately installed, ship the dollies back to Tekelec in the crate after use. After installing the equipment, bolt the dollies securely in the crate and return to Tekelec.

OR

If the equipment is not being immediately installed, ship the dollies back to Tekelec in the box supplied with the crate. After unpacking the equipment, return the crate to Tekelec and retain the box to return the dollies. After installing the equipment, remove the dollies and return to Tekelec in the supplied box.

It is the site supervisor's responsibility to assure the crate and dollies are returned to Tekelec.

Acronyms

A	Ampere
ACL	Application Processor Code Loader
ACM	Applications Communications Module
AIN	Advanced Intelligent Networks
AINF	Application Interface Applique
ANSI	American National Standards Institute.
AP	Application Processor
APD	Application Processor DCM bootstrap code
API	Application Interface
ASM	Application Services Module
ATM	Asynchronous Transfer Mode
BITS	Building Integrated Timing System
BM	Buss Master (Cognitronics)
BOM	Bill Of Materials
BP	Board Prom
BPDCM	Board Prom DCM
Bps	Bit per second
BSS	Base Sentinel Server
CAIN	Carrier Advanced Intelligent Network
C&C	Configuration and Control
CAP	Communication & Application Processor
CAR	Corrective Action Report
CE CISPR A	Compliance European, Comite Internationale Special des Perturbations Radioelectrique (European Compliance, International Special Committee on Radio Interference, Class A)
CDU	CAP Downloadable Utility
CF	Control Frame
CLLI	Common Language Location Identifier
CI	Clock Interface Card

CNAM ..... Calling Name Delivery Service

COTS..... Commercial Off-the-Shelf

CP ..... Communications Processor

cPCI..... compact *International Telecommunications Union* International Point Code

CSR ..... Customer Service Request

D1G ..... Database Communication 1 Gigabyte Expansion Memory Module

DB..... Database

DCM ..... Database Communications Module

DIAG ..... Diagnostics

DMS ..... Disk Management Service

DRAM ..... Dynamic Random Access Memory

DS0 ..... Digital Signal Level-0 (64 Kbits/sec)

DS1 ..... Digital Signal Level-1 (1.544Mbits/sec)

DSM ..... Database Services Module

E1..... European Digital Signal Level-1 (2.048 Mbits/sec).

EBI..... Extended Bus Interface

EDCM..... Enhanced Database Communications Module

EF ..... Extension Frame

ELAP..... EAGLE 5 SAS *Local Network Portability* Application Processor

EILA..... Enhanced Integrated LIM Applique

EMAP ..... EAGLE 5 SAS Measurement Application Processor

EMM ..... Extended Memory Management

EPAP ..... EAGLE 5 SAS Provisioning Application Processor

EOAM..... Enhanced OAM GPL

ESP ..... Expanded

FAP..... Fuse and Alarm Panel

GLS ..... Generic Loader Services

GPL ..... Generic Program Load

GPLM ..... GPL Management

GPSM-II ..... General Purpose Service Module

GTT ..... Global Title Translation

GWS ..... GTT Gateway Screening

HCAP ..... High-Speed Communications and Applications Processor

HMI ..... Human-Machine

HMUX ..... High-speed Multiplexer

IAD ..... Integrated Access Device

ICM ..... IMT configuration manager task

ILA ..... Integrated LIM Appliques

ILDR ..... IMT loader task

IMT ..... Inter-processor Message Transport

IMTC ..... IMT Control task

IP ..... Internet Protocol

IP^7 ..... Tekelec's Internet Protocol to SS7 Interface

IPD ..... IMT Processor DCM operational code

IPMX ..... IMT Power and Multiplexer card

ISDN ..... Integrated Services Digital Network.

IS-NR ..... In Service – Normal

ISR ..... Interrupt Service Routine

ITU ..... International Telecommunications Union

KHz ..... Kilo Hertz (1000 Hertz)

LAN ..... Local Area Network.

LFS ..... Link Fault Sectionalization

LIM ..... Link Interface Module

LNP ..... Local Number Portability

LIM-AINF ..... A LIM with a software-selectable interface

LSMS ..... Local Service Management System

M256 ..... 256 Megabyte Memory Expansion Card

MAS ..... Maintenance and Administration Subsystem

MASP ..... Maintenance and Administration Subsystem Processor

MAU ..... Media Access Unit

MBUS ..... Maintenance Bus

MCA ..... Matrix Controller Assembly

MCAP ..... Maintenance Communications & Applications Processor

MDAL ..... Maintenance Disk and Alarm Card

MF ..... Miscellaneous Frame

MEAS ..... Measurements

MG ..... Media Gateway

MGC ..... Media Gateway Controller

MGCP ..... Media Gateway Controller Protocol

MIB ..... Maintenance Information Base utility

MIM ..... Multi-Channel Interface Module

MMI ..... Machine-Machine Interfaces

MPL ..... Multi-Port Link interface module

MPS ..... Multi-Purpose Server

MSU ..... (SS7) Message Signalling Unit

MTOS ..... Multi-Tasking Operating System, Industrial Programming Inc.

NEBS ..... Network Equipment Building System

NSD ..... Tekelec's Network Systems Division

OAM ..... Operations, Administration, and Maintenance

OA&M ..... Operations, Administration, and Maintenance

OCU ..... Office Channel Unit

OOS ..... Out of Service

OOS-MT-DSBLD ..... Out of Service-Maintenance Disabled

OSS ..... Operations Support System

OS ..... Operations System

PMTC ..... Peripheral Maintenance task

PBC ..... Portable Backplane Chassis

PROT ..... Protocol

PSTN ..... Public Switched Telephone Network

RAM ..... Random Access Memory

RMA ..... Return Material Authorization

SAMS ..... Sentinel Alarm Management System

SCP ..... Service Control Point (SS7 Network)

SCCP ..... Signal Connection Control Part

SCM ..... System Configuration Manager

SCN ..... Switched Circuit Network

SCSI ..... Small Computer Systems Interface

SEAC ..... Signaling Engineering and Administration Center

SEAS ..... Signaling Engineering and Administration System

SG ..... Secure Gateway

SIP ..... Session Initiation Protocol

SS7 ..... Signaling System Seven

SSP ..... Service Switching Point (SS7 Network)

STC ..... Sentinel Transport Cards

STP ..... Signal Transfer Point (SS7 Network)

STPLAN ..... Signaling Transfer Point Local Area Network

SURV ..... Surveillance

T1 ..... The North American telecommunications standard defining a circuit that multiplexes and switches 24 channels and operates at speeds of 1.544 Mbps

TAS ..... Tone and Announcement Server

TCU ..... Table Creation Utility

TCP ..... Transport Control Protocol

TCP/IP ..... Transmission Control Protocol/Internet Protocol

TDM ..... Terminal Disk Module

TEKOS ..... Tekelec Operating System

TOCA	Timing Output Composite Automatic
TOS486	Tekos Operating System for the 486
TOS4M	Tekos Operating System for the 486 implemented via MTOS
TSC	Time Slot Counter
TSM	Translation Services Module
UAM	Unsolicited Alarm Output
UI	User Interface
UIM	Unsolicited Information Messages
UD1G	Upgraded Database Communication 1 Gigabyte Expansion Memory Module
V.35	ITU Interface Recommendation, V.35
VPN	Virtual Private Network
WAN	Wide Area Network
XLX	Xilinx

Doc Assignments (from SW perspective)

Table 1-1. Documentation Abbreviation

Abbreviations	Meanings	Description
C&C	Configuration and Control	Any Maintenance function that deals with taking devices in and out of states (INH, ALW, ACT, CANC, etc.). Also includes Upgrade.
DB	Database	Anything dealing with provisioning database entities (ENT, DLT, CHG, unless otherwise specified) and the display of those entities in the database (RTRV, unless otherwise specified). Also includes database maintenance (CHG-DB, REPT-STAT-DB) and audit (AUD-DATA.
DIAG	Diagnostics	Hardware or software, particularly CDU (for software) and manufacturing diagnostics (from hardware). For software
IP	Internet Protocol	Anything derived or originating from the IP^7 product line. Includes everything, maintenance, database, upgrade, etc.
MEAS	Measurements	Anything to do with measurements collection and reporting, including the associated database and retrieval commands. Also includes Measurements Platform, but not the FTP component (see UI below)
MPS	Multi-Server Platform	Anything to do with MPS applications, both ELAP (EAGLE 5 SAS *Local Network Portability* Application Processor) and EPAP (EAGLE 5 SAS Provisioning Application Processor)
OS	Operating Systems	Anything to do with any of the many the operating systems.
PROT	Protocol	Anything protocol application related, including SS^7, SCCP, GWS, STPLAN, LNP, INP, G-Flex, G-Port, etc., unless otherwise specified. Note that this does NOT include the database, maintenance, or measurements functions related to these applications.
SURV	Surveillance	Any Maintenance function that deals with collecting and reporting UIMs, UAMs, and status of devices (REPT-STAT-xxx, unless otherwise specified).

UI	User Interface	Anything dealing with the parsing of command input and the processing of command and unsolicited output for both Human-Machine (HMI) and Machine-Machine (MMI) interfaces (any data that comes and goes over one of the terminal types listed in CHG-TRM). Also includes Terminal Administration (CHG/RTRV-TRM), Terminal Echo (ACT/CANC-ECHO), Security Administration (ENT/CHG/DLT/RTRV-SECU-xxx), Security Log (xxx-SECULOG), and User ID and Password Administration (xxx-USER, CHG-PID). Also includes anything related to IP services provided by the EAGLE, including FTP and Telnet.
XLX	Xilinx	Used to include Xilinx changes by Hardware that need to be picked up by Software in a build.

Systems Components Overview

This section lists name, function, and part number(s) of *Signaling Products* systems components in alphabetical order. For a detailed hardware description, refer to the *Signaling Products Hardware Manual* and *Tekelec 1000 Hardware Manual and Tekelec 1100 Hardware Manual* included with your system documentation.

Table 1-2. Components

Acronym	Name	Function	Part Number	Note
ACM	Application Communication Module	Ethernet 10Base-T access to remote hosts	870-1008-xx	
CI	Clock Interface Card (Holdover Clock)	Input signal redundancy.	804-0165-xx	
cPCI	Compact Peripheral Component Interface	Alarm, ASM, and CSM laden PBC	840-1124-01	
DCM	Database Communications Module	IP connectivity	870-1671-04 870-1945-03 870-1984-01	K6, original K6-lll, 200 TPS DCMX
DSM	Database Service Module	Large-capacity Signaling Connection Control Part (SCCP)/database	870-1984-02 870-1984-03 870-1984-04 870-1984-05	DSM-1G DSM-2G DSM-3G DSM-4G
EDCM (double slot)	Enhanced Database Communications Module	IP connectivity	870-2197-xx	double-slot, IP^7 SG 4.0 and later
EDCM (single slot)	Enhanced Database Communications Module	IP connectivity	870-2372-xx	single-slot, IP^7 SG 4.0 and later
EILA	Enhanced Integrated Link Interface Module Applique	Provides 1 or 2 OCU, DS0A, or V.35 interfaces for SS7 links using 586 processor	870-2049-xx	
ESP	Expanded	Provides up to 1500 links through a series of Model 120 servers,		
HMUX	High-Speed Multiplexer	Provides Interprocessor Message Transport (IMT) bus continuity for all cards connected to the IMT bus for large systems	870-1965-xx	EAGLE 5 SAS only Used in large systems instead of IPMX

Table 1-2. Components (Continued)

Acronym	Name	Function	Part Number	Note
ILA	Integrated Link Interface Module Applique	Provides 1 or 2 OCU, DS0A, or V.35 interfaces for SS7 links	870-1484-xx	
IPMX	Interprocessor Message Transport Multiplexer	Provides Interprocessor Message Transport (IMT) bus continuity for all cards connected to the IMT bus	850-0188-xx 870-1171-03	
LIM	Link Interface Module	Provides specific SS7 interfaces	870-1014-xx	
LIM-AINF	Link Interface Module - Application Interface	Provides 1 or 2 OCU, DS0A, or V.35 interfaces for SS7 links	870-1488-xx	Replaced by ILA and EILA
LIM-ATM	Link Interface Module - Asynchronous Transfer Module	Provides 1 Asynchronous Transfer Mode over T1 Interface at 1.544 Mbps	870-1293-xx	
LIM-DS0A	Link Interface Module	Provides 2 Digital Signal Level 0 Applique DS0A interfaces at 56 kbps	870-1009-xx 870-1014-xx	Replaced by ILA and EILA
LIM- E1 and E1-T1 MIM	Link Interface Module - E1 andE1-T1 MIM	Connection point from system backplane to external E1 andE1-T1 MIM interface	E1 870-1379-xx andE1-T1 MIM 870-2198-01	European equivalent of the North American T1
LIM-OCU	Link Interface Module - Office Channel Units	Provides 2 Office Channel Unit (OCU) interfaces at 56 kbps	870-1010-xx 870-1486-xx	Replaced by ILA and EILA
LIM-V.35	Link Interface Module - Trunk Interface	Provides 1 V.35 interface at 56 and 64 kbps for SS7 and 4.8, 9.6, 19.2, 56, and 64 kbps for X.25	870-1012-xx 870-1487-xx	Replaced by ILA and EILA
GPSM-II	General Purpose Service Module	IP connectivity, replace MCAP in large systems	870-2360-01	
MCA	Matrix Controller Automatic (Holdover Clock)	Controls output protection switch matrix	000-0028-xx	
MCAP	Maintenance Administration Subsystem (MAS) Communications Applications Processor	Provides control for the interface functions of the TDM	870-1013-xx 870-1307-xx	MCAP-256

Table 1-2. Components (Continued)

Acronym	Name	Function	Part Number	Note
MDAL	Maintenance Disk and Alarm Card	Alarming and cartridge-based loading of software	870-0773-XX	
MIS	Maintenance Interface System Card (Holdover Clock)	Provides alarms output to system control shelf	804-0175-xx	
MPL	Multi-Port Link Interface Module	Provides up to 8 ANSI 56 Kbps DS0 link connectivity	870-2061-xx	
MPS	Multi-purpose Server	Database/reload functionality to various applications	890-1287-xx 890-1374-xx	Integrated Applications Open System
TDM	Terminal Disk Module	Hard disk storage. TDM 870-0774-08 and later	870-0774-xx	
TOCA	Timing Output Composite Automatic (Holdover Clock)	Clocks outputs (TO1 and TO2) for A and B through the system control shelf	804-0166-xx	
TSM	Translation Service Module	SCCP	870-1289-xx 870-1291-xx 870-1292-xx	TSM-1G TSM-3G TSM-4G

Module Installation

WARNING: Always wear a wrist strap or other electrostatic protection when handling electronic cards or electrostatic sensitive devices.

Modules connect to backplanes through connectors located on the rear of the card. Cam-out/lock-in levers, mounted on the front edge of the card, assist in insertion and removal of the card. Part numbers, LEDs, Text and Bar codes (CLEI and serial number) are also located on the faceplate of the cards.

NOTE: To remove a card use both hands to open injector/ejector module locking tabs out from the faceplate of the card. See Figure 1-1. To insert a card, align the card in the slot, push slowly in until the connectors engage and seat. Press both tabs in until they lock the card in place. To ensure proper seating, the tabs must be held in the release position until the locking tabs can engage with the upper and lower flange on the shelf. Once the locking tabs on the levers engage the shelf plane, the tabs are pressed in toward the card faceplate, and must be flush with the faceplate when the card is completely seated.

Figure 1-1. Removing Modules

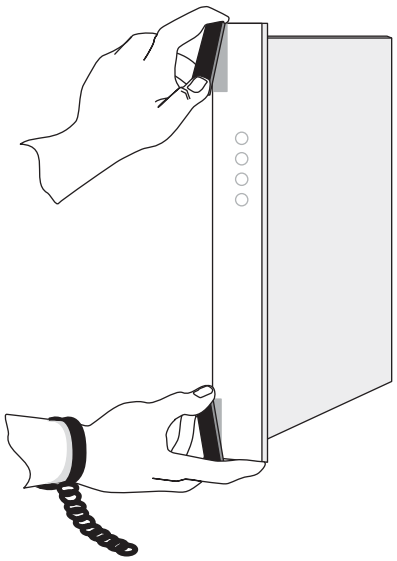

Hardware Operational Testing

Hardware operational testing is designed to verify the functionality of the finalized construction of the hardware at the customer site. The demarcation line for the testing is up to and including any panel directly connected to the system. All cabling, and other Tekelec equipment is also verified operational per the *Hardware Operational Test Manual* provided with the test equipment.

2

Sentinel System Components

Safety Information 2–3
Introduction 2–4
Installing Integrated Sentinel Hardware 2–5
Expanded 2–5
Breaker Panels 2–10
Break-Out Box 2–12
Ethernet Switches 2–13
Routers 2–19
Adding Servers to the Netra-based ESP Frame 2–22
Integrated Sentinel ESP Cabling 2–26
Integrated Sentinel ESP TO-FROM Table 2–34
Installing Non-integrated Sentinel Hardware 2–38
Site Collector, i2000 Frame 2–42
Site Collector, Break-Out Box 2–43
Site Collector, i2000 Frame, Interconnect 2–50
Installng the Sentinel Server Frame 2–54
Installng the Sentinel Server Frame 2–54
Server Frame, BP 2–56
Server Frame, Switch 2–56
Server Frame, Console Server 2–58

Server Frame, Interconnect 2–61

Packet Backplane Chassis 2–64

Safety Information

Tekelec uses these icons and text, throughout this manual, to alert the reader, to assure personnel safety, to minimize possible service interruptions, and to warn of the potential for equipment damage.

Table 2-1. Safety Icons

	TOPPLE/DANGER: This icon and text indicate the possibility of *personal injury and equipment damage*.
	DANGER: This icon and text indicate the possibility of *personal injury*.
	CAUTION: This icon and text indicate the possibility of *service interruption*.
	WARNING: This icon and text indicate the possibility of *equipment damage*.

Table 2-2. Tools and Equipment

Check	Tools and Equipment
	Safety glasses
	Tie wraps
	Lacing cord
	Flushcutter (to cut cable ties)
	Diagonal cutters
	#2 Phillips screwdriver
	#3 Phillips screwdriver
	Slotted screwdriver 1/8 inch blade, 8-inch shank, preferred
	Wrench set (1/4 inch or 3/8 inch drive or open-end wrenches)
	Crimper

Introduction

This chapter describes the installation, positioning, and procedures for Sentinel™ Netra-based server components.

> **NOTE: For information on Tekelec 1000-based Sentinel components that have become available beginning with Sentinel 11.x, including interconnect diagrams, cable lists, and installation instructions, see the *TekServer Platform Services Hardware Manual*.**

Sentinel can be deployed integrated with the EAGLE 5 SAS® system or in a non-integrated configuration with probes. The Integrated Sentinel monitors EAGLE STP links internally to eliminate hardware connections such as cabling, bridge amplifiers, and patch panels. The Integrated Sentinel can receive all acknowledged message signal units (MSU) as well as other important information from the Eagle STP.

The non-integrated Sentinel product provides external monitoring of SS7 links without direct connection to an EAGLE 5 SAS. In the non-integrated Sentinel, SS7 traffic is processed by a series of processes collectively referred to as a Sentinel Site Collector. A Sentinel Site Collector System consists of user workstations, the Eagle STP Shelves, Signaling Transfer Points (STPs) or other SS7 Network Equipment and a Site Collector Frame.

Table 2-3. Frame and Server Naming Conventions

Acronym	Name	Equipment
SPF	Sentinel Processor Frame	Frame plus provisioned hardware
ESP	Expanded	
ESPS	Expanded Server	Sun Netra™ 120 or Server model 120
FR	Flight Recorder (for probed Sentinel)	

Table 2-4. Sentinel Server Frame Naming Conventions

Acronym	Name	Equipment
SSF	Sentinel Server Frame	Frame plus Sun Netra™ 20
BSS	Base Sentinel Server	Sun Netra™ 20 or Server model 20
SAMS	Sentinel Alarm Management System	
DGS	Data Gateway Server (optional)	
TS	Traffic Server (optional)	

Installing Integrated Sentinel Hardware

Integrated Sentinel consists of user workstations, the EAGLE 5 SAS STP shelves, STC cards in the EAGLE 5 SAS shelves, Expanded (ESP), and other SS7 network equipment.

Figure 2-1. EAGLE 5 SAS STP and Integrated Sentinel Diagram

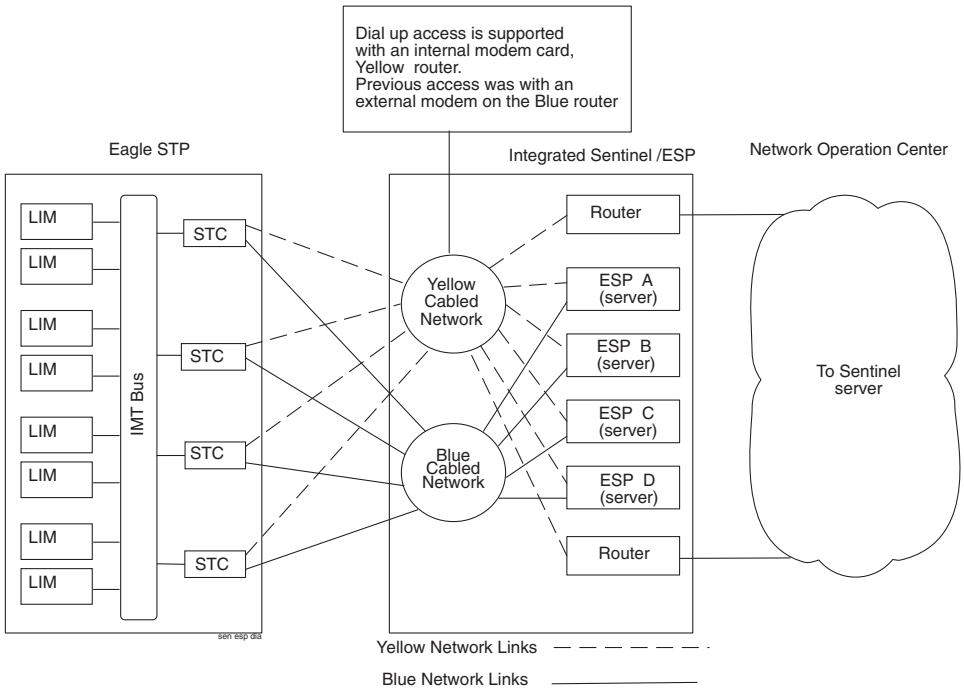

Expanded

The Integrated Sentinel probeless system contains the Expanded (ESP). The ESP is the Sentinel system with the hardware and software platform that provides the interface to the Integrated EAGLE 5 SAS and Sentinel monitoring system.

NOTE: Prior to Sentinel 11.0, the ESP hardware and software platform runs on the model 120 server. Starting with Sentinel 11.2, the ESP is hosted on Tekelec's Tekelec 1000. For installation information on Sentinel 11.0 and later ESPs, see the *TekServer Platform Services Hardware Manual*.

All Netra-based ESP servers located at one EAGLE 5 SAS location are ESP subsystems. Up to 17 (16 active plus one standby for N+1 redundancy) ESP servers are installed in one frame. The Sentinel ESP subsystem consists of a minimum of two ESP servers in the initial frame. The first server, designated 1A, services 32 EAGLE 5 SAS links and the second server, designated 1B, provides redundancy. An additional server is added for each 32 links monitored to a maximum of 17 servers per frame, 3 frames (1500 links). Each ESP server is considered a separate processing element with respect to communications to the downstream Sentinel servers and therefore requires its own IP address. A single demarcation point is provided for the Customer's network at the ESP frame's router.

Additional hardware is required to make a fully functional system. An ESP subassembly frame with maximum configuration contains:

- 2 Breaker Panels (P/N 870-2248-02)
- 1 Break-Out Box (part of P/N 804-1426-01)
- 4 Ethernet Network Switches (P/N 870-2437-02)
- 2 Isolation Routers (P/N 870-2249-06 or P/N 870-2711-01)
- 1 Modem Card (P/N 870-2739-01) router A, yellow router.
- 2 Model 120 Servers, ESP Servers (N+1 configuration)
- 15 Expansion Model 120 Servers, ESP Servers
- Sun Blade Workstation

Figure 2-2. Integrated Sentinel Frames

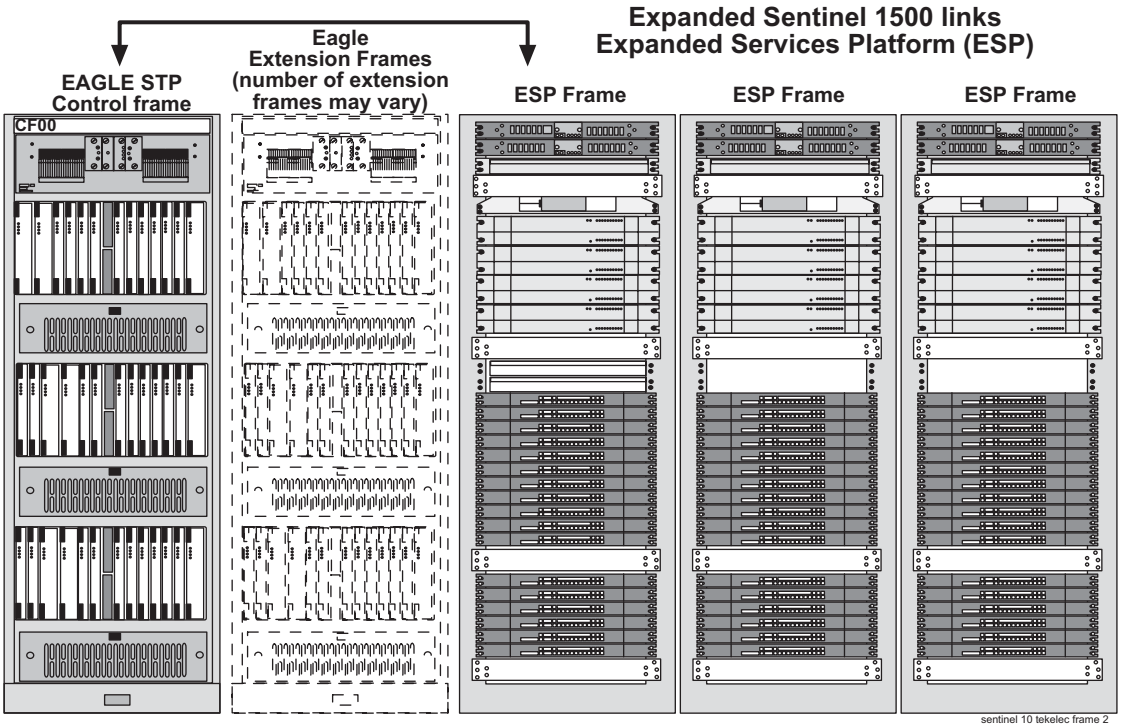

Figure 2-3 shows a maximum configuration front view of the Sentinel Processor Frame (SPF-00). 00 refers to the first Sentinel frame. Frame installation procedures are described in the *TekServer Platform Services Hardware Manual*.

Figure 2-3. Netra-based ESP Maximum Configuration

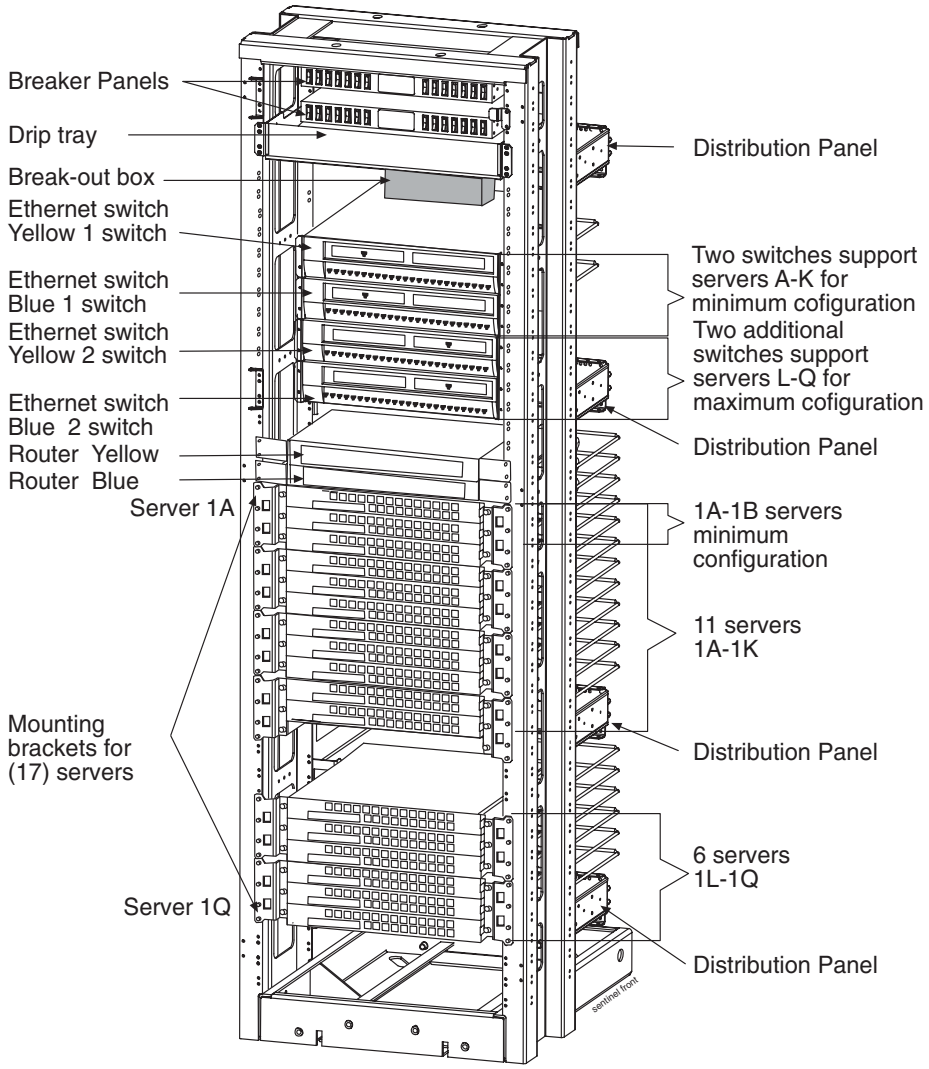

ESP Integrated Sentinel Front View
(maximum configuration)

Figure 2-4. Netra-based ESP Minimum Configuration Rear

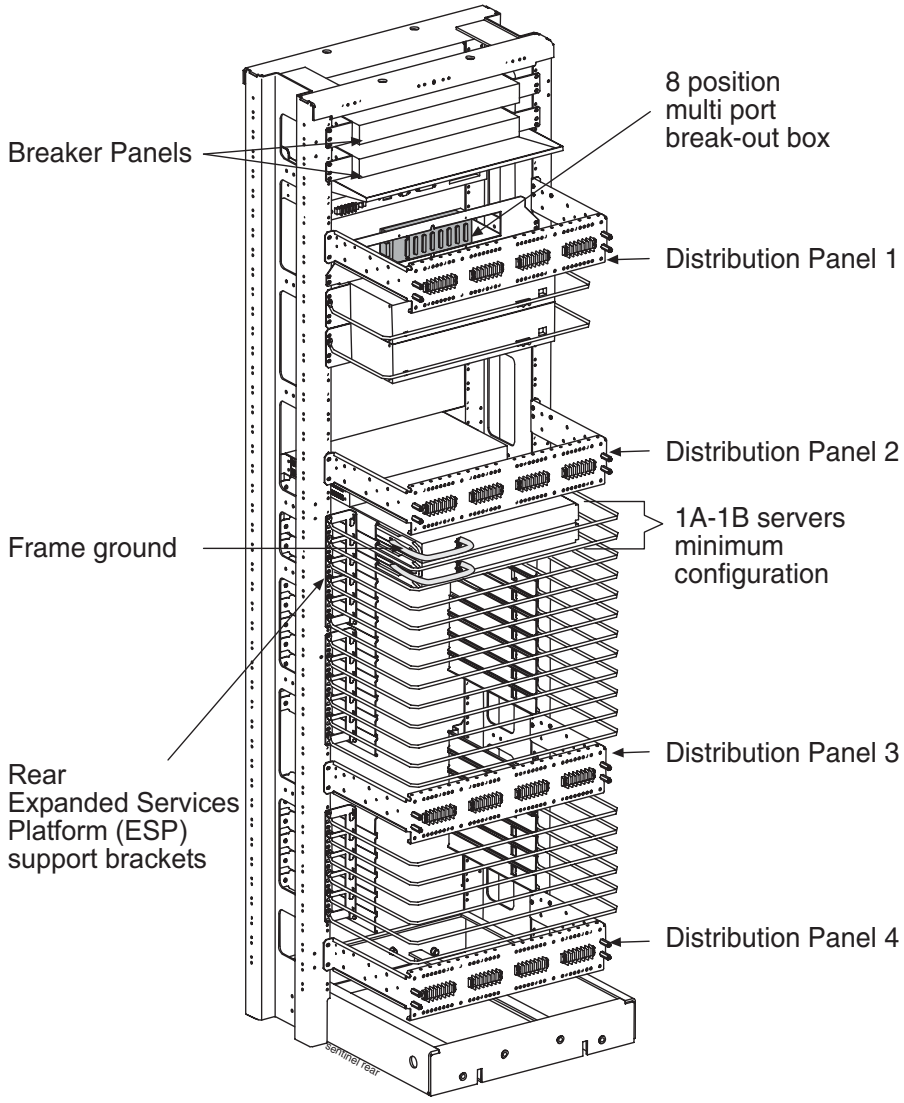

ESP Integrated Sentinel Rear View
(minimum configuration)

Breaker Panels

NOTE: Breaker Panels (P/N 870-2248-XX) are the breaker panels in frames that support Sentinel products. See the information and the illustrations beginning with Figure 2-5, on page 2-11. These pages are referenced when breaker panels are referred to. Individual breaker panels are labeled on the finger guard over the breaker with associated information.

The following section describes the components of the Breaker Panels (BP) (P/N 870-2248-02) used in Integrated Sentinel prior to Sentinel 11.2. The BPs provide the following features:

- Dual-feed power inputs (Input A and Input B) to each of 4 Power Distribution Panels (PDPs) and 2 BPs for the system. 40-amp domestic or 32-amp international/fuse/breaker supplied by the Power Distribution Center.
- Maximum of fourteen breakers for each breaker panel
- Breaker panels accept circuit breakers up to 20 ampere rating
- Visual A and B input power alarms with single remote dry contact indicator
- Replaceable alarm card

NOTE: The drip tray, located under the breaker panels, is designed to assure compliance with NEBS, UL, and CE safety requirements, aiding damage control in the event of a fire.

Figure 2-5 shows the details of the front and rear view of the breaker panel, and Figure 2-19 shows the details of the cabling of the breaker panels for the Sentinel ESP frame.

NOTE: If all breakers are not turned on, the alarm Light Emitting Diodes (LED) lights. To turn off the alarm LED, press RESET. The alarm LED resets and turns off.

Figure 2-5. Breaker Panel Front and Rear

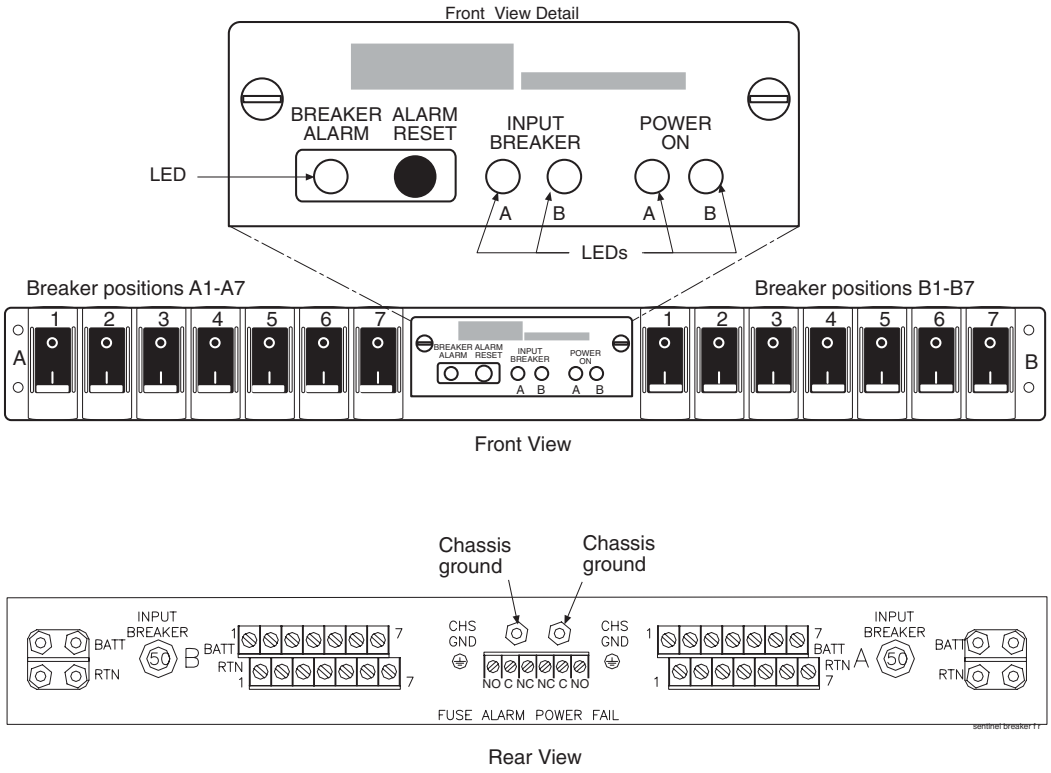

NOTE: When breakers (P/N 870-2248-XX) trip to the half-way position as a result of an overload, they must be switched completely OFF, then ON to reset.

Table 2-5. Breaker Panel LEDs

LED	Color	Description
Power On A	Green	Lights whenever Side A is receiving input power. LED remains lit even if the input breaker has tripped.
Power On B	Green	Lights whenever Side B is receiving input power. LED remains lit even if the input breaker has tripped.
Breaker Alarm	Red	Lights whenever an output circuit breaker has tripped or turned off.
Input Breaker A/B	Green	Lights whenever Side A/B is receiving input power, not on if the input breaker is tripped.

Break-Out Box

The high performance Peripheral Component Interconnect (PCI)/Serial Asynchronous Interface connection I/O is through an 8 port break-out box. The ESP Integrated Sentinel frame contains a break-out box located above Yellow switch 1 and below the drip pan. See Figure 2-6 on page 2-12

Figure 2-6. Break-Out Box

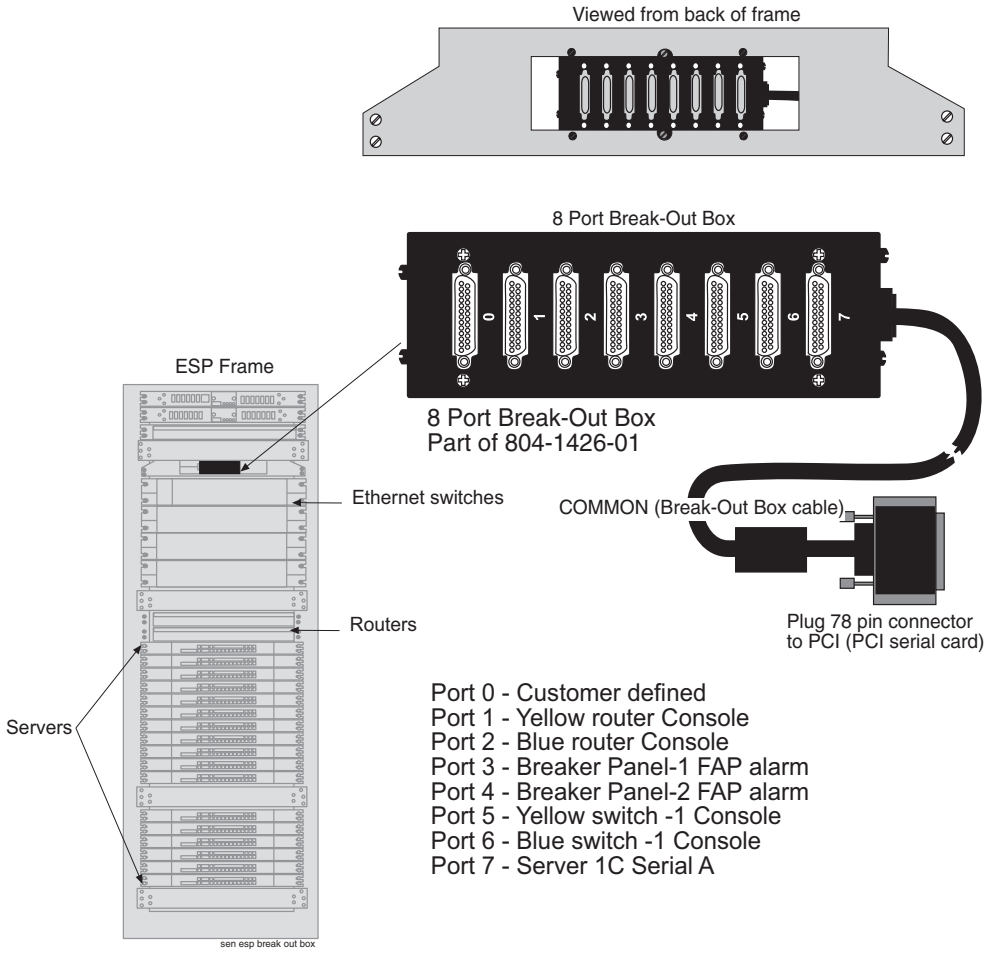

Ethernet Switches

The following section provides an overview of the Ethernet Local Area Network (LAN) switches used in an ESP subassembly. The Ethernet switches cross-connect all the components in the ESP, functioning as an internal LAN. The switches support 24 auto-sensing 10/100Base-T ports each. See Figure 2-7 for switch information for maximum configuration with 17 servers. These Ethernet switches (P/N 804-1579-01) are switches in frames that support Sentinel products. See the information and the illustrations beginning with Figure 2-7, on page 2-13.

Figure 2-7. Ethernet Switches Maximum Configuration

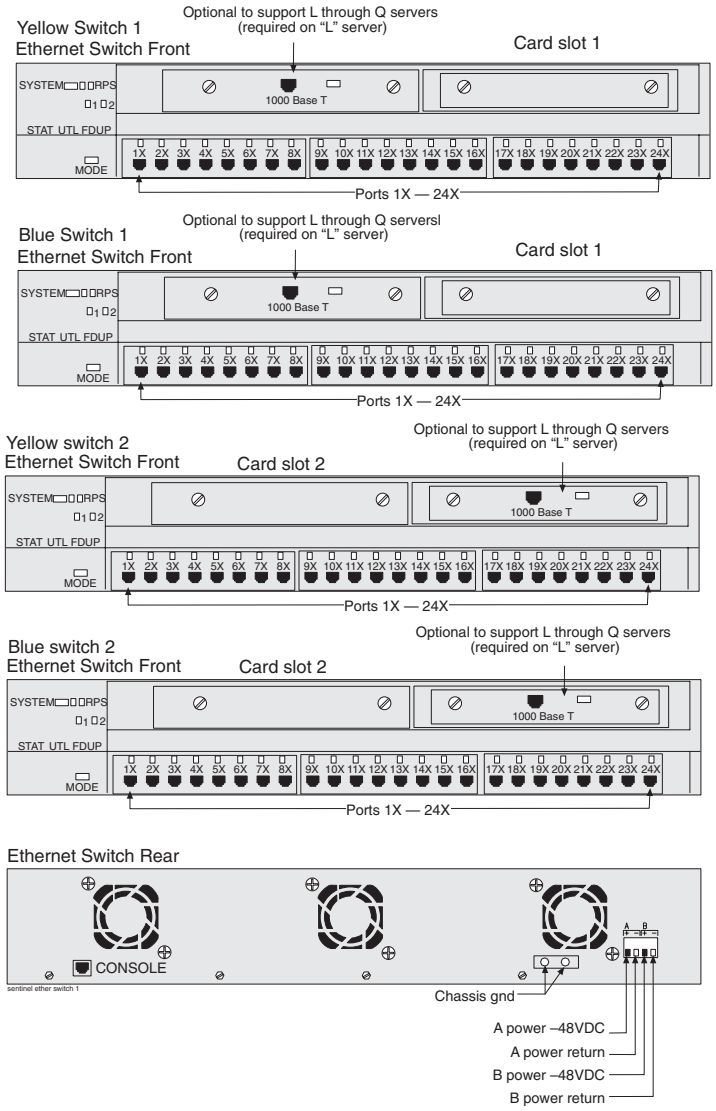

Table 2-6. Ethernet Switch LEDs.

LED	Description
System	Green-Indicates when power is present to the switch and the power switch is in the ON position. Amber-Indicates power is present but the system is not functioning properly.
1 and 2	Indicates expansion boards WS-X2932-XL are installed and functioning. LED 1 (Left board) LED 2 (Right board)
RPS (Always OFF)	OFF when the redundant power supply is not present. ON redundant power supply is present and functional.
Pressing the MODE switch on the front of the WS-C2924-XL-EN changes the per-port LED indications to the following.	
STAT (port status) Default	Off-No link. Solid green, Link present. Flashing green, Activity. Port is transmitting or receiving data. Alternating green/amber, Link fault. Error frames can affect connectivity, and errors such as excessive collisions, Cyclic Redundancy Check (CRC) errors, and alignment and jabber errors are monitored for a link-fault indication. Solid amber, Port is not forwarding. Port was disabled by management or an address violation or was blocked by Spanning Tree Protocol (STP). **NOTE: After a port is reconfigured, the port LED can remain amber for up to 30 seconds as STP checks the switch for possible loops.**
UTL (utilization)	Green The LEDs display backplane utilization on a logarithmic scuffle all port LEDs are green, the switch is using 50 percent or more of its total bandwidth capacity. If the right-most LED is amber, the switch is using less than 50 percent of its total bandwidth. If the LED to the left of the right-most LED is amber, the switch is using less than 25 percent of its total capacity, and so on.
FDUP (port full-duplex)	Off Port is operating in half duplex. Green Port is operating in full duplex.
100 (port speed)	Off Port is operating at 10 Mbps. Green Port is operating at 100 Mbps.

Installation of Ethernet Switches

Figure 2-8. Ethernet Switches

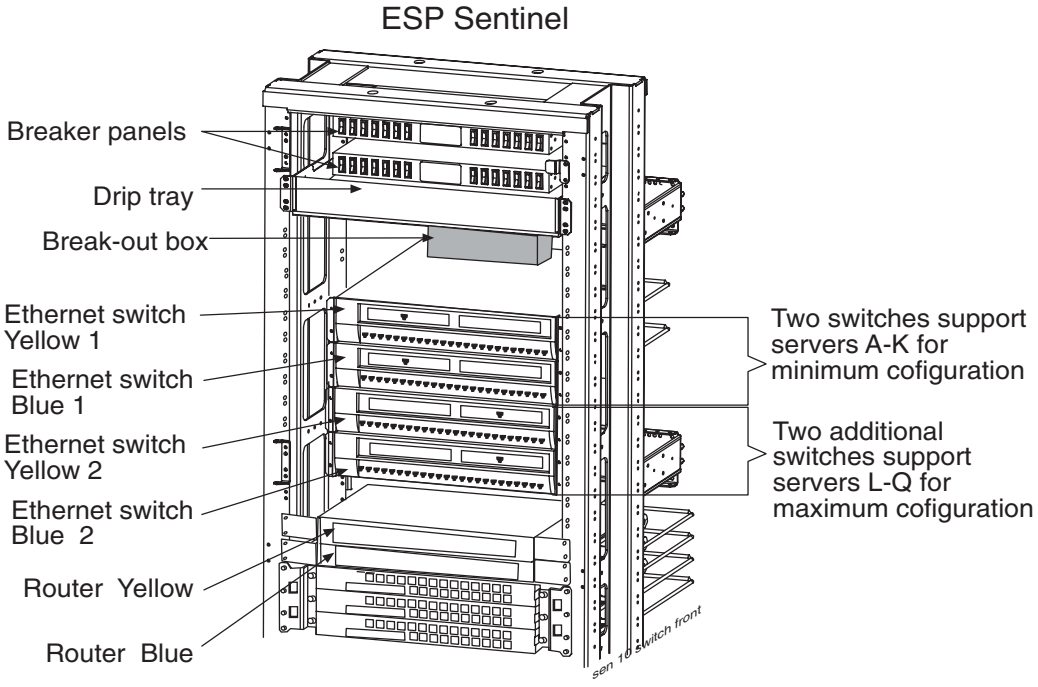

Figure 2-9. Ethernet Switches Assembly

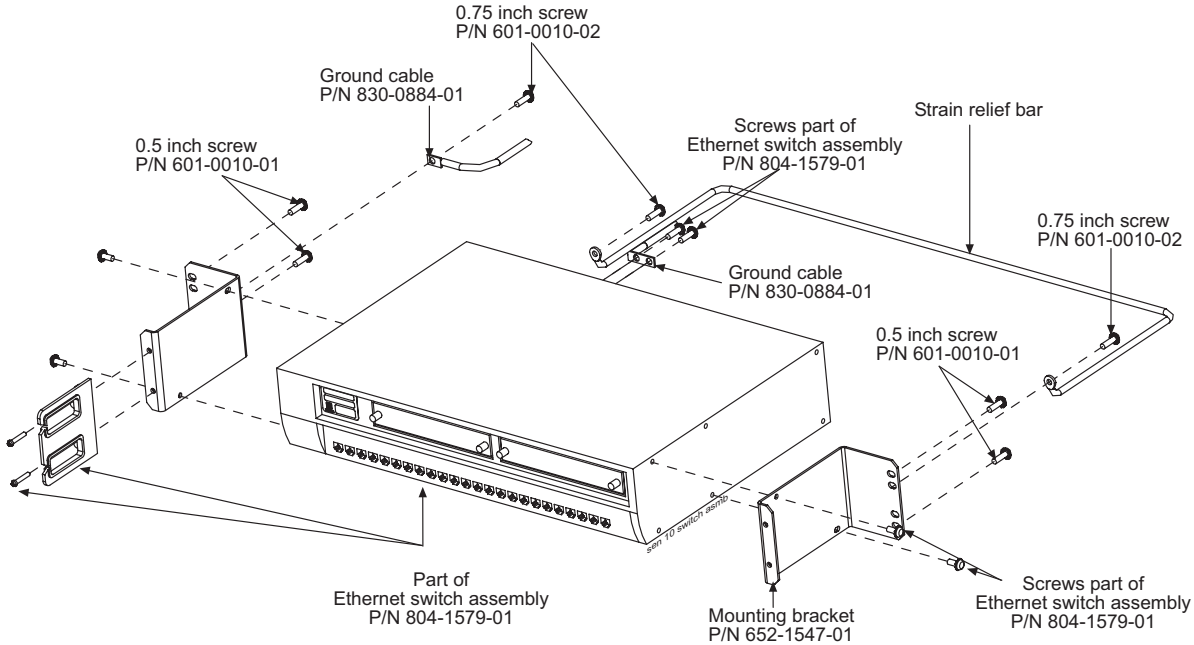

Procedure — Installing Switches

1. Inventory equipment to ensure that Ethernet switches assembly P/N 804-1579-01 and related equipment including cables are on site.

2. Secure the mounting brackets (P/N 652-1547-01) to both switches. There are two screws (P/N 600-0258-01) per bracket.

3. If applicable remove the cable strain relief bars below the switches.

4. Mount the Yellow Switch 2 directly below Blue Switch 1, using mounting positions 63-66. Mounting positions are counted from the bottom of the frame.

5. Holding the switch in place start the shorter of the available screws, 0.5 inch (P/N 601-0010-01) into the top hole of the mounting bracket on either side of the switch.

6. The strain relief bar mounting holes should be **above** the bar.
   With one of the strain relief bars (P/N 652-1437-04) that was removed earlier, place the strain relief bar mounting hole over the second mounting hole from the top on the switch bracket. Insert and twist a 0.75 inch (P/N 601-0010-02) screw into the mounting hole on the strain relief bar, through the hole on the switch bracket, and into the frame.
   On the other side, of the rear, of the switch, place the strain relief bar mounting hole over the second hole from the top of the switch mounting bracket. Insert a 0.75 inch (P/N 601-0010-02) screw into the strain relief bar mounting hole, through the mounting hole on the bracket, and into the frame. Torque both screws, one on either rear side of the switch, to 35 inch-pounds.
   The strain relief bar should be straight across the rear of the switch.

7. Remove the two screws, lower right side, below the fan exhaust, on the back of the switch for the chassis ground. Attach the ground cable (P/N 830-0823-03) with a two hole lug to the switch ground.

8. The ground strap is terminated in the third hole from the top of the mounting bracket on the right, rear, of the switch. With a 0.75 inch (P/N 601-0010-02) screw terminate the ground strap to the frame.

Figure 2-10. Ethernet Switches Ground Strap

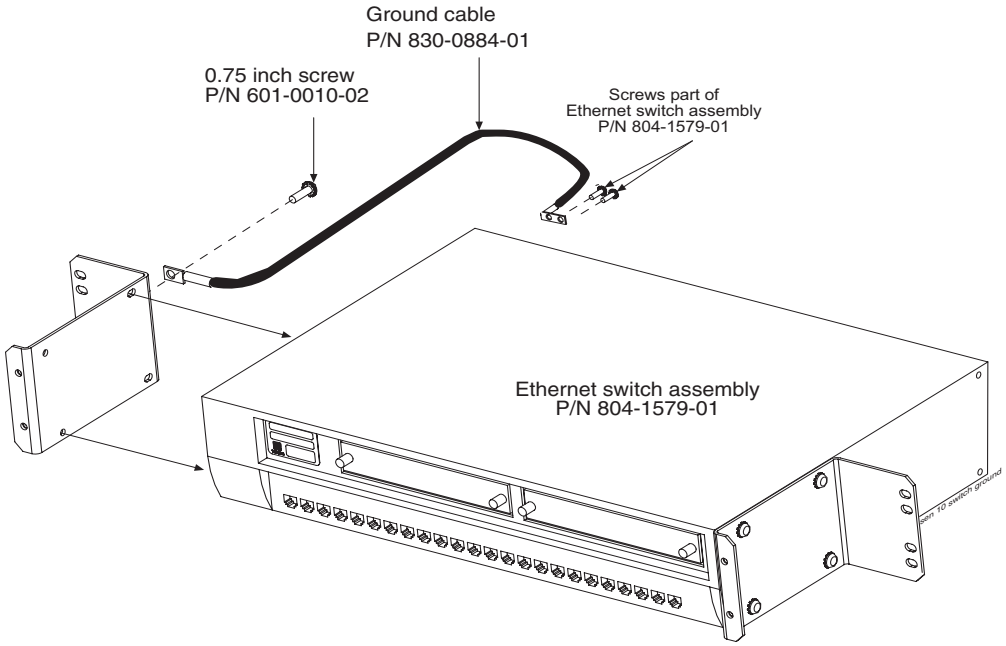

9. On the **left** side, rear, of the switch, in the third and fourth holes of the bracket start a 0.5 inch (P/N 601-0010-01) screw.
On the **right** side, rear, of the switch, in the fourth hole of the bracket start a 0.5 inch (P/N 601-0010-01) screw. When the screws are securely in place Torque the screws to 35 inch-pounds.

---

10. Mount the Blue Switch 2 directly below the Yellow Switch 2, in mounting positions 59-62. Again, mounting positions are counted from the bottom of the frame.

---

11. Holding the switch in place start the shorter of the available screws 0.5 inch (P/N 601-0010-01) in to the third hole of the mounting bracket on either side of the switch. The reason for placing the screw in the third hole first, is because the cable strain relief bar mounting lugs will mount in both the top and second mounting holes on this switch bracket.
The strain relief bar should be straight across the rear of the switch.

---

12. These strain relief bar mounting holes should be **below** the bar.
Place the cable strain relief bar (P/N 652-1437-04) mounting hole over the second mounting hole from the top on the switch bracket. Insert and twist a 0.75 inch (P/N 601-0010-02) screw into the mounting hole on the strain relief bar, through the hole on the switch bracket, and into the frame.
On the other side of the rear of the switch place the strain relief bar

mounting hole over the second hole from the top of the switch mounting bracket. Insert a 0.75 inch (P/N 601-0010-02) screw into the strain relief bar mounting hole, through the mounting hole on the bracket, and into the frame. Torque both screws one on either rear side of the switch to 35-inch-pounds.
The strain relief bar should be straight across the rear of the switch.

---

13. On Blue Switch 2 remove the two screws, rear, lower right side, below the fan exhaust, on the back of the switch for the chassis ground. Attach the ground cable (P/N 830-0823-03) with a two hole lug, to the switch ground.

---

14. On this switch the mounting screw in the third hole will be removed to terminate the ground strap. The ground strap is terminated in the third hole from the top of the mounting bracket on the right, rear, of the switch. With a 0.75 inch (P/N 601-0010-02) screw terminate the ground strap to the frame.

Figure 2-11. Ethernet Switches Connections

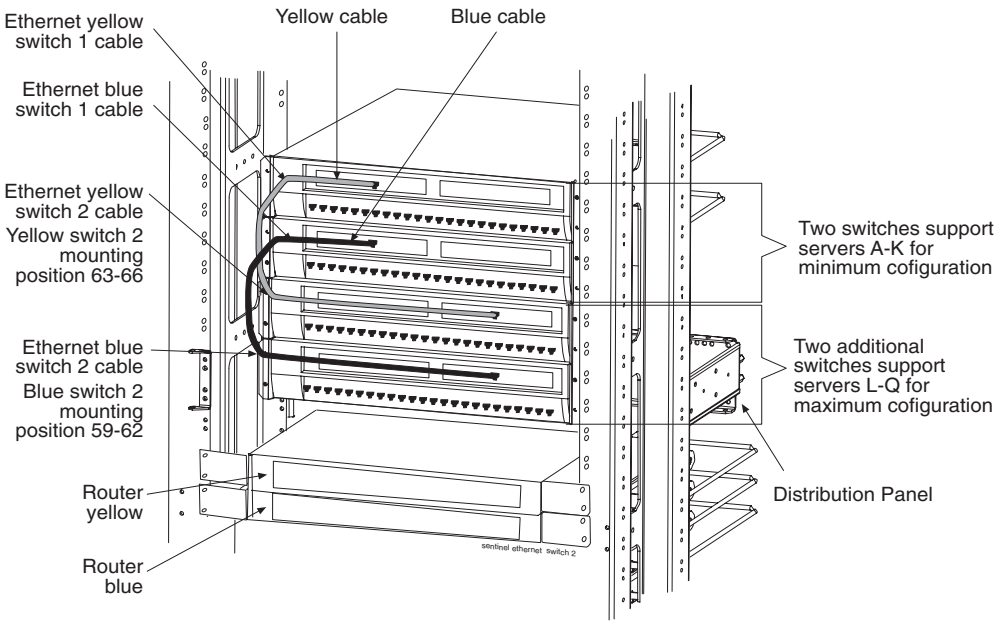

Routers

This section provides descriptions and installation instructions for Sentinel routers.These Routers are (P/N 870-2249-06 or P/N 870-2711-01) are the routers used in frames that support Sentinel products. See the information and the illustrations beginning with Figure 2-12, on page 2-19.

The isolation routers (P/N 870-2249-06 or P/N 870-2711-01) provide 10/100Base-T LAN communications between the customer LAN or dedicated network. Figure 2-12 shows the front and rear views of the router. Table 2-7 describes the LED indicator functions on the front and rear of the router.

Figure 2-12. Sentinel Router Front and Rear

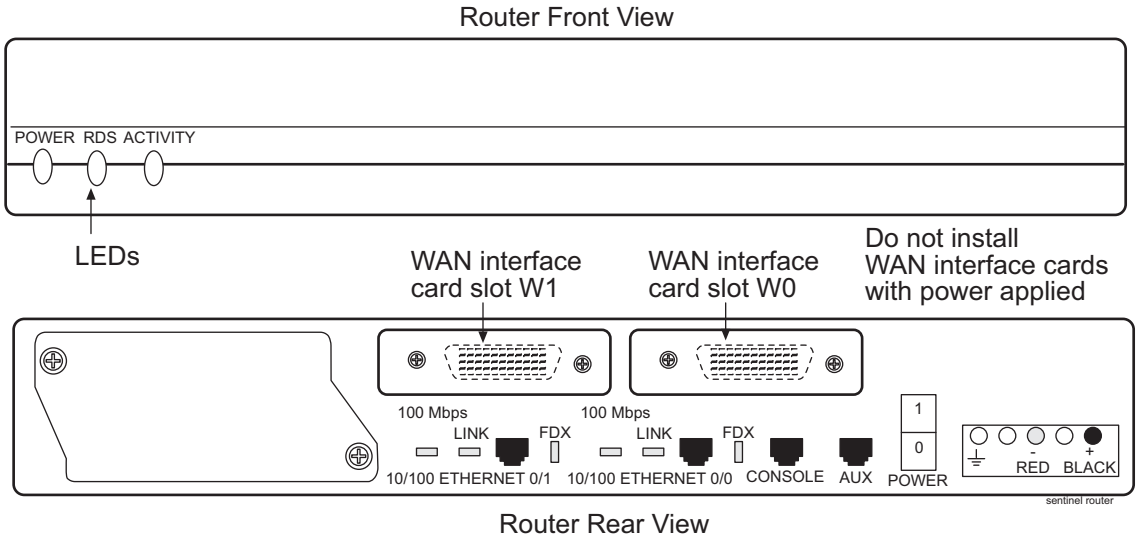

Table 2-7. Router LEDs

LED	Description Front
POWER	Indicates connection and power
RDS	Ready Data Set
ACTIVITY	Blink-indicates data activity on the link
LED	**Description Rear**
LNK	Indicates link is established to far end connection.
ACT	Blink-indicates data activity on the link.

Servers Model 120

This section describes the parts of the Netra-based ESP server nodes. An ESP server can monitor a maximum of 32 SS7 links. ESP server nodes are populated in an N + 1 configuration for redundancy to a maximum of 17 in an ESP subassembly frame. ESP server nodes are rack mounted in heavy-duty frames.

The ESP server node is a one-processor device and has no frame buffer, audio capability, mouse port, or keyboard port. The console ports and Ethernet ports are the primary interfaces of model 120 server.

The server node provides the following:

- High performance processor.
- Modular internal design.
- High performance disk, system, memory and I/O subsystems.
- High performance Peripheral Component Interconnect (PCI)/Serial Asynchronous Interface connection I/O (8 port break-out box).
- Redundant hot swap power supply units.
- Powered by redundant –48VDC supplies.

Server Model 120 Features

The server primary board contains the Central Processing Unit (CPU) module, memory, system control Application-Specific Integrated Circuits (ASICs) and I/O ASICs.

Table 2-8. System Specifications.

Server Node Specifications	
Dimensions and Weight Height Width Depth Weight (unpackaged but fully configured)	 44.0 mm (1.73 in.) 437.2 mm (17.21 in.) 487.4 mm (19.19 in.) 10kg (22 lbs.)
CPU Processor type Clock rate CPUs provided Cache on module	 UltraSPARC-II 650 MHz One Processors (NEBS level 3 compliant) 256 Kbyte Internal
Memory Size Memory type	 4 GB maximum PC133 standard Registered DIMMs
Storage (Internal) Bus Disks CD-ROM	 66 MB/second UltraSCSI Two 3.5x1-in. disks (36GB); disk bays are front accessible and support hot-plug 644 MB Slim line CD-ROM drive; 24X speed or DVD-ROM
I/O Architecture PCI Interface/Serial Asynchronous Interface connection Serial ports I/O ports	**See Note:** Two RS-232C/RS-423 serial ports (RJ45) Expansion Serial port interface. Two Ultra-SCSI port Two standard 10/100BASE-T ports
Operating System	Solaris 8

NOTE: ESP server 1A (top server) has an expansion serial board connected by cable to the serial break-out box. ESP server 1B through 1-Q are accessible only though the standard Ethernet ports and serial ports.

Adding Servers to the Netra-based ESP Frame

NOTE: Model 120, ESP Servers: (Server A P/N 870-2655-xx and Server B P/N 870-2655-01) are servers in the frames that support Sentinel products. See the information and the illustrations beginning on Figure 2-13, on page 2-23 when model 120 ESP Servers are referred to.

NOTE: When adding servers to the frame system refer to Internal Frame Expansion Kit P/N 840-0117-01.

Up to 15 additional servers (total 17) may be added to an ESP frame.

Procedure — Adding the Server to the Frame

1. Notice that the expansion brackets are installed at the factory during manufacture. See Figure 2-13 through Figure 2-18for the location of the captive thumb screws, brackets, and grounding information.

2. Stand in front of the frame and slide the additional server into the slot of the bracket, attached to the frame immediately below the lowest existing server. Captive thump screws are on either side of the server.

3. The captive thumb screws line up with the next available hole provided in the bracket attached to the frame.

Figure 2-13. Adding ESP Server to Frame

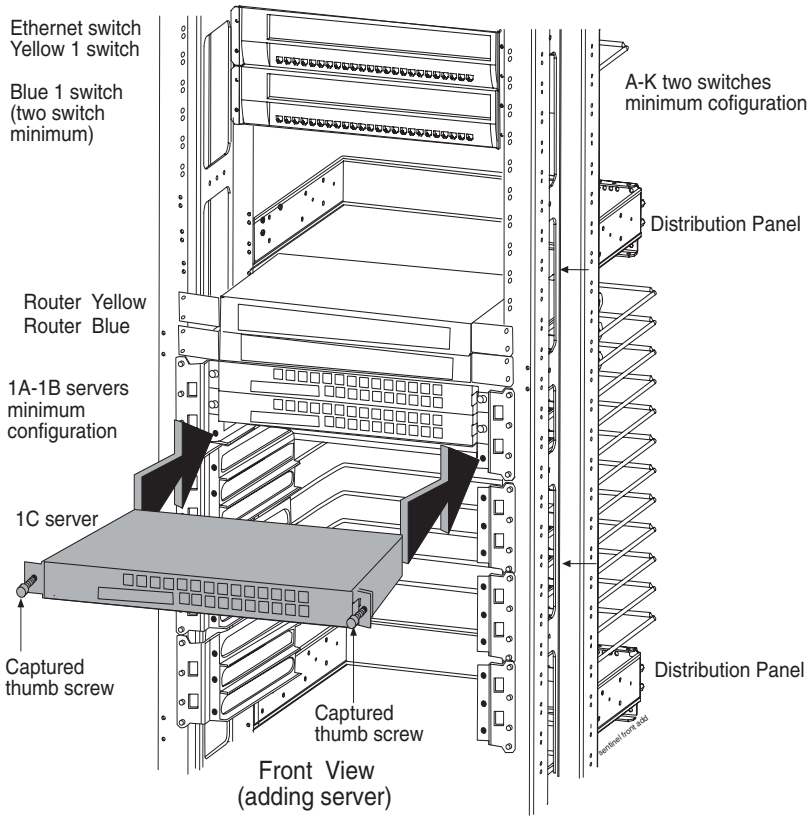

See Figure 2-15 for the location of the thumb screws.

Figure 2-14. Adding a Server

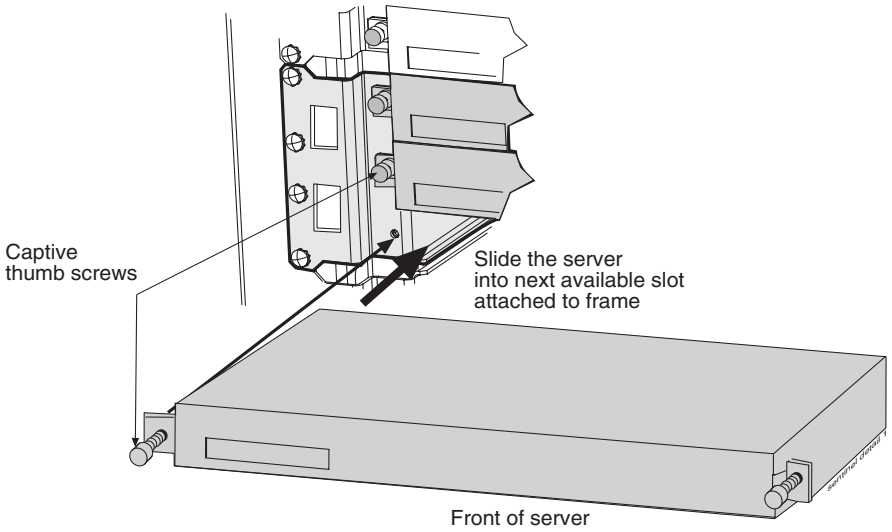

See Figure 2-15 for the location of the captive thumb screws and brackets.

Figure 2-15. Server Model 120 Front

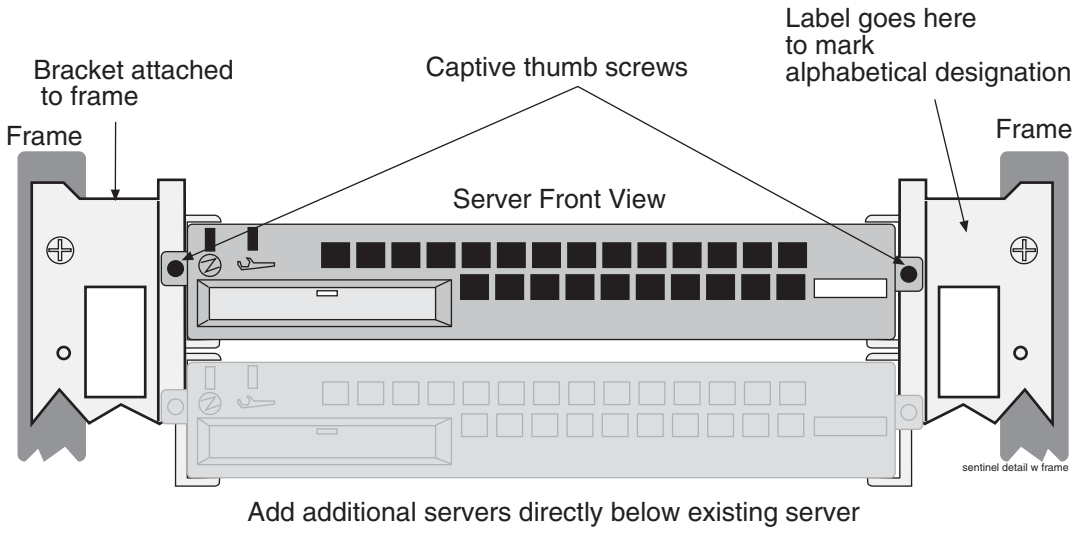

Place the next added server directly below the existing installed server using the Internal Frame Expansion Kit (P/N 840-0117-01).

Figure 2-16. Server Model 120, 1A and 1B Rear

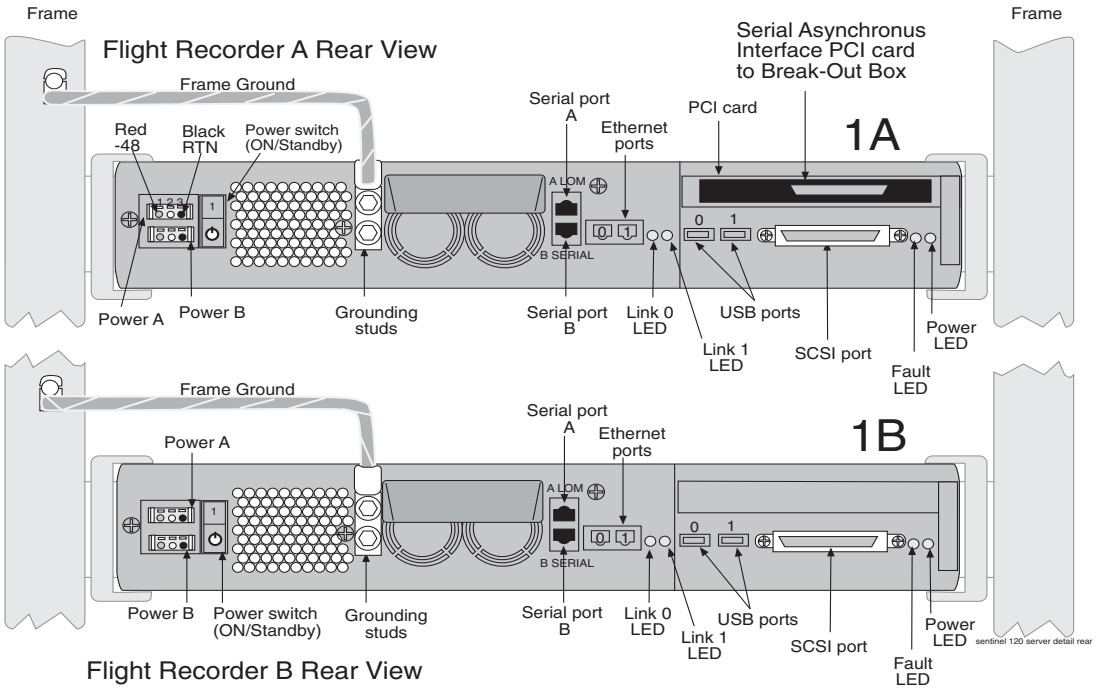

The frame groundings studs are located on the rear of the sentinel server and the provided cable attaches to the side of the bracket on the frame holding the server in place. See Figure 2-17 and Figure 2-18 for an illustration showing the frame ground cables.

These figures also show Philip pan head screws P/N 601-0600-02 that screws through the brackets on the frame, on either side of the server. These screws, pressing against the server to maintain stability.

Figure 2-17. Frame Ground Detail

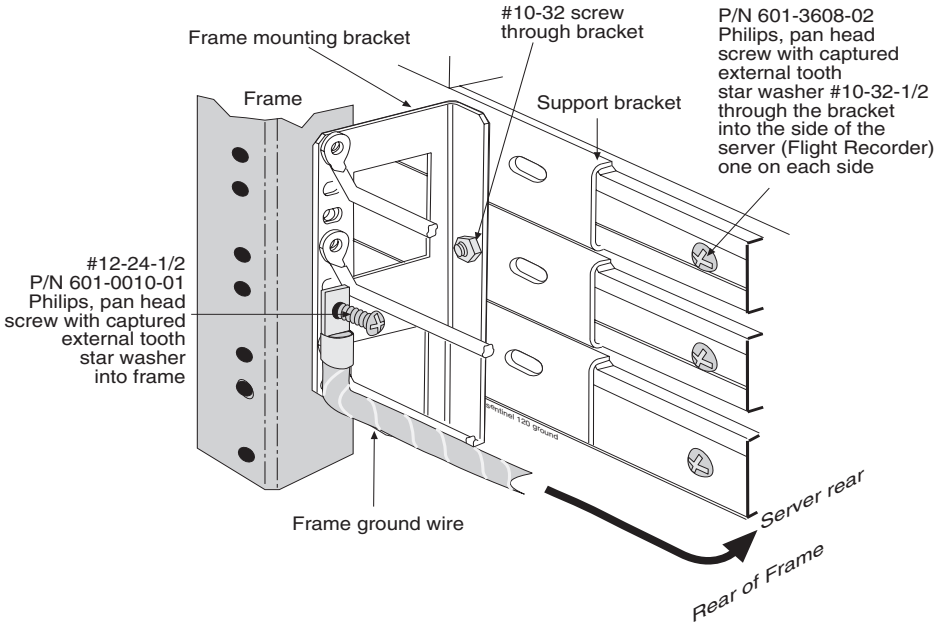

Figure 2-18. Server Frame Ground

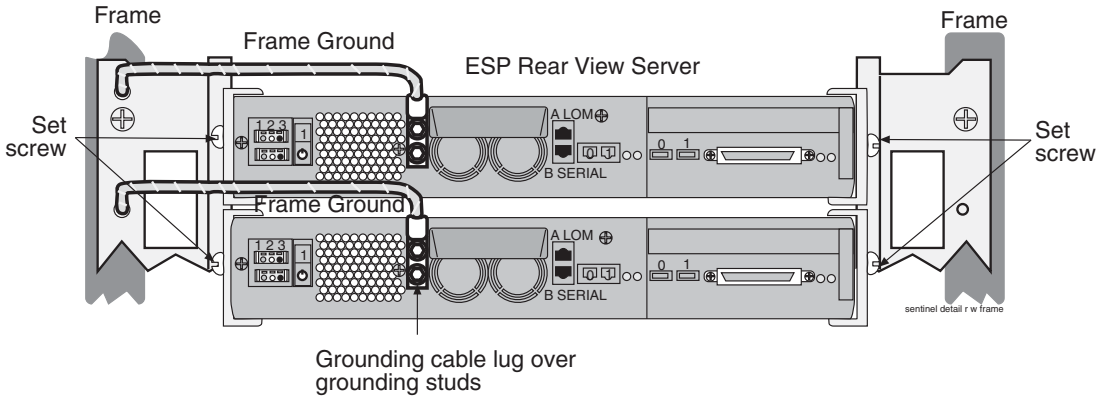

Integrated Sentinel ESP Cabling

NOTE: Remove any covering for the back of the Breaker Panel (BP) (P/N 870-2248-02) to gain unobstructed access to the breaker panel connections.

Figure 2-19. ESP BP Cabling

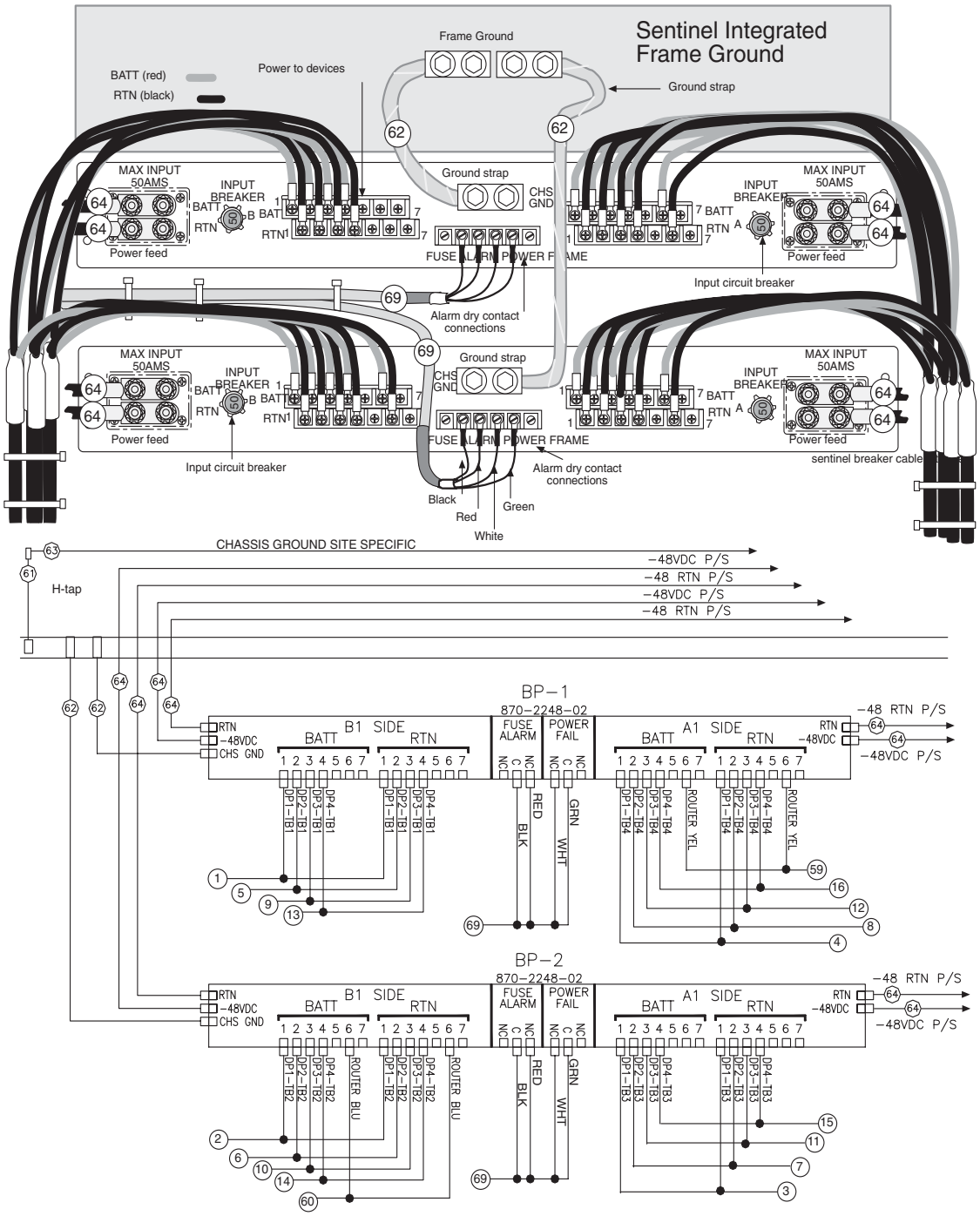

Figure 2-20. ESP Interconnect

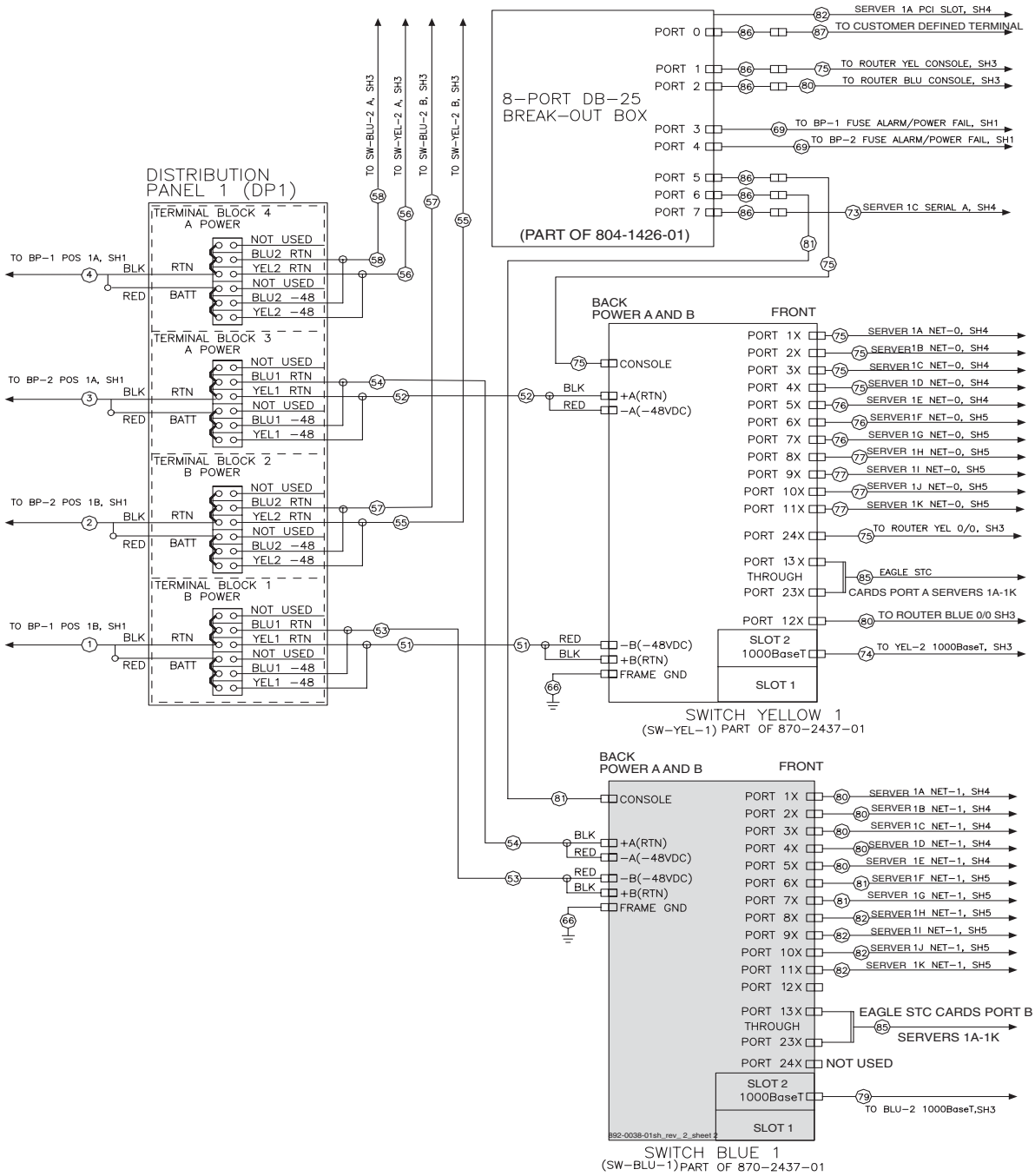

Figure 2-21. ESP Interconnect

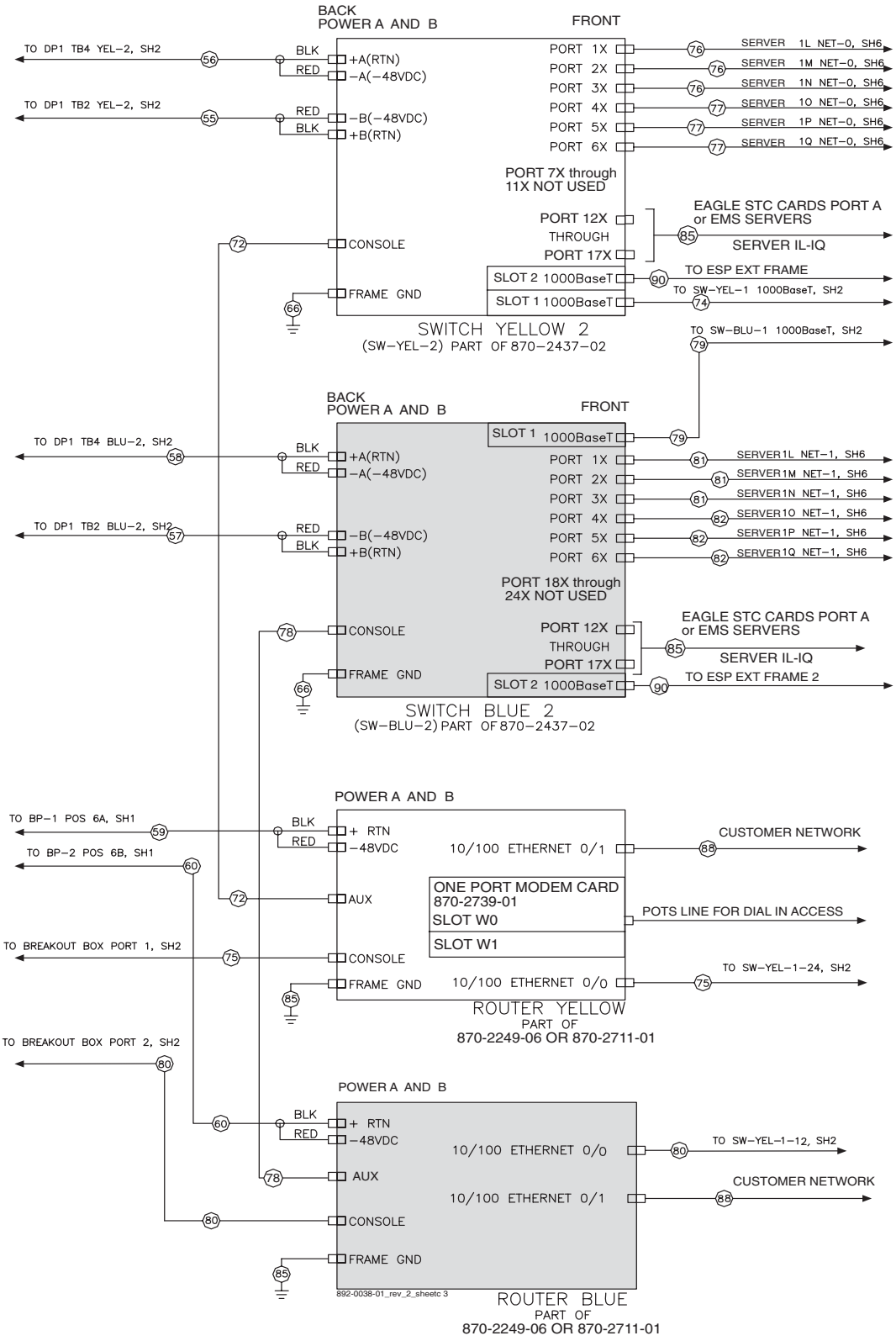

Figure 2-22. ESP Interconnect

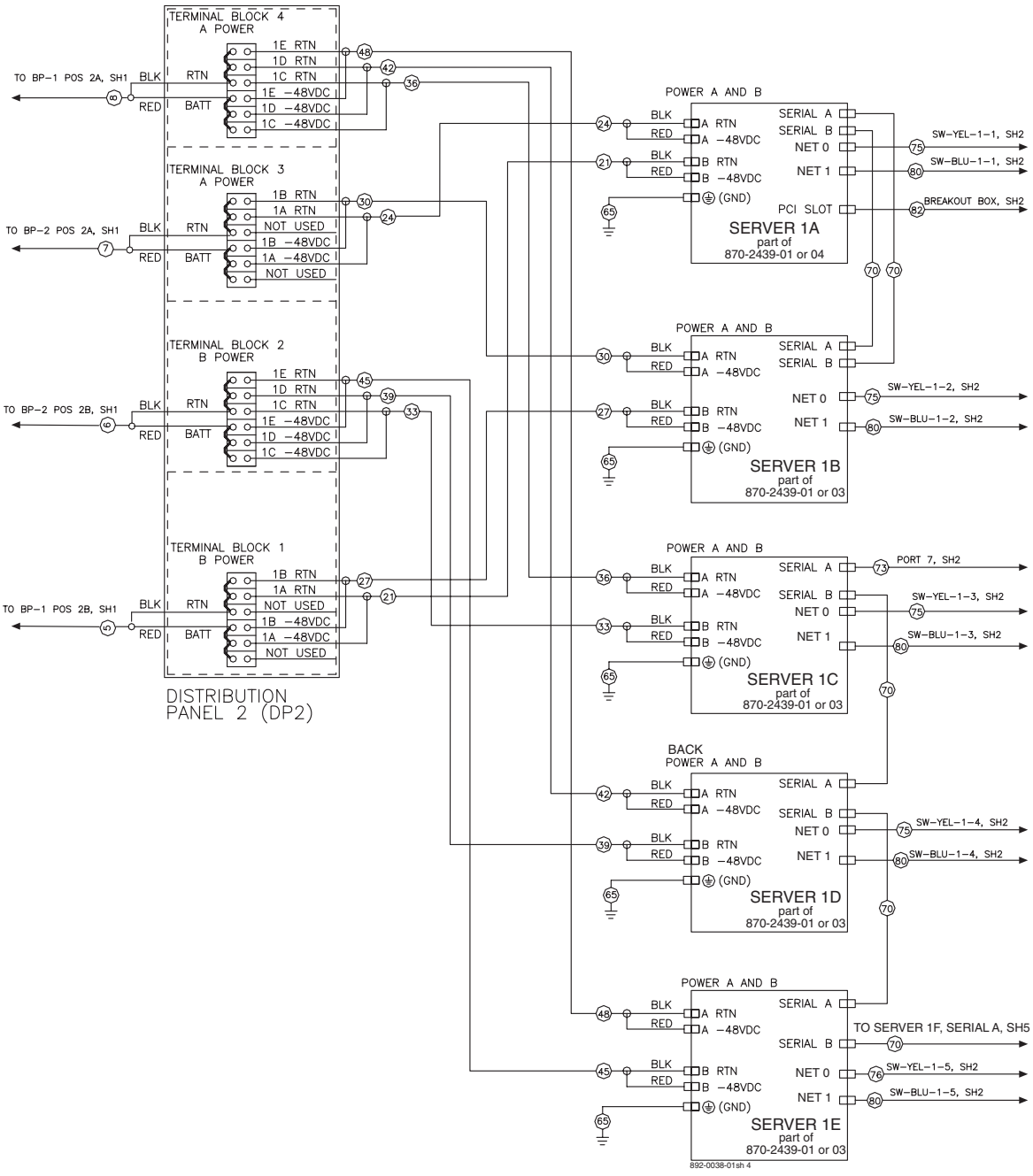

Figure 2-23. ESP Interconnect

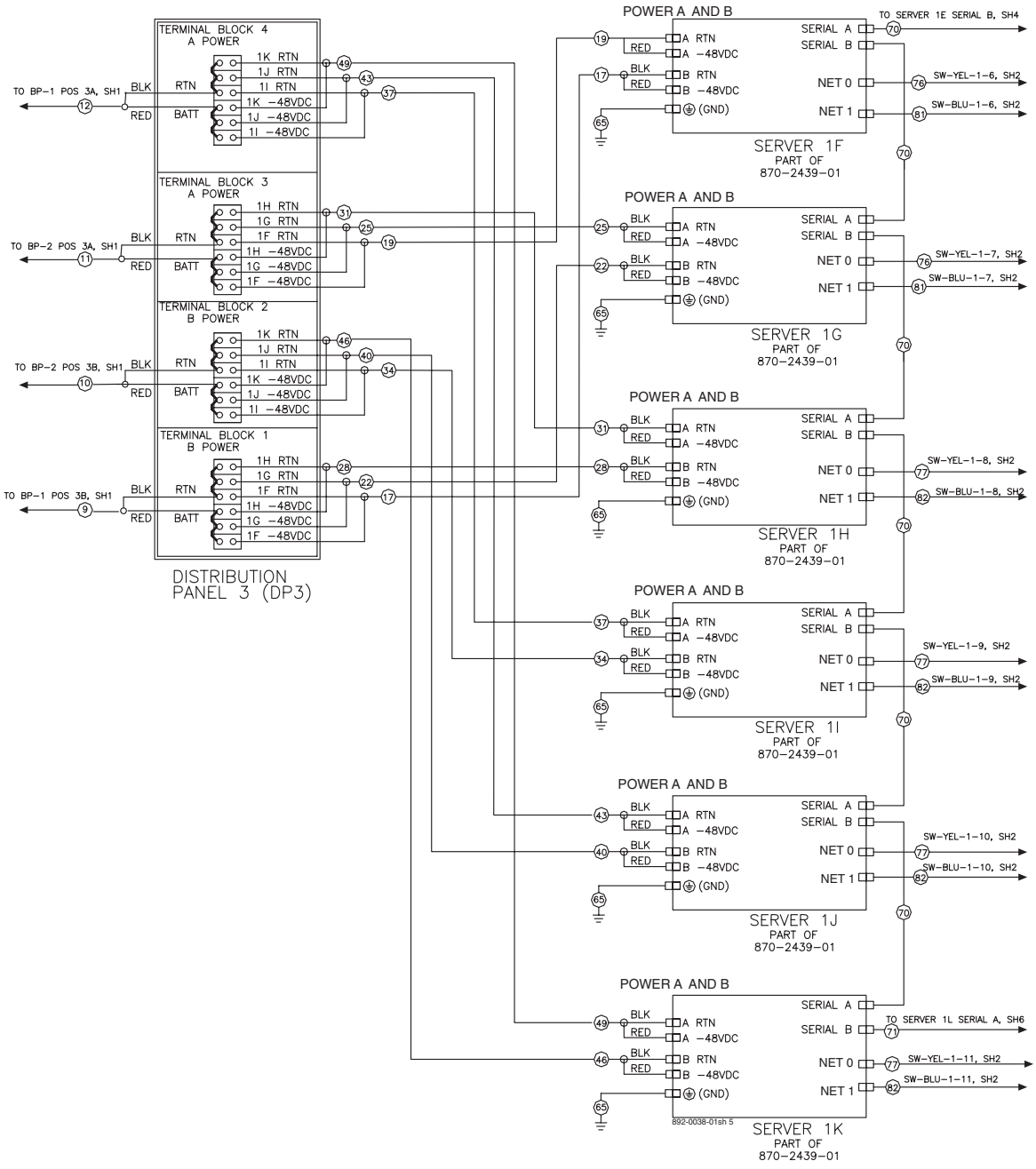

Figure 2-24. ESP Interconnect

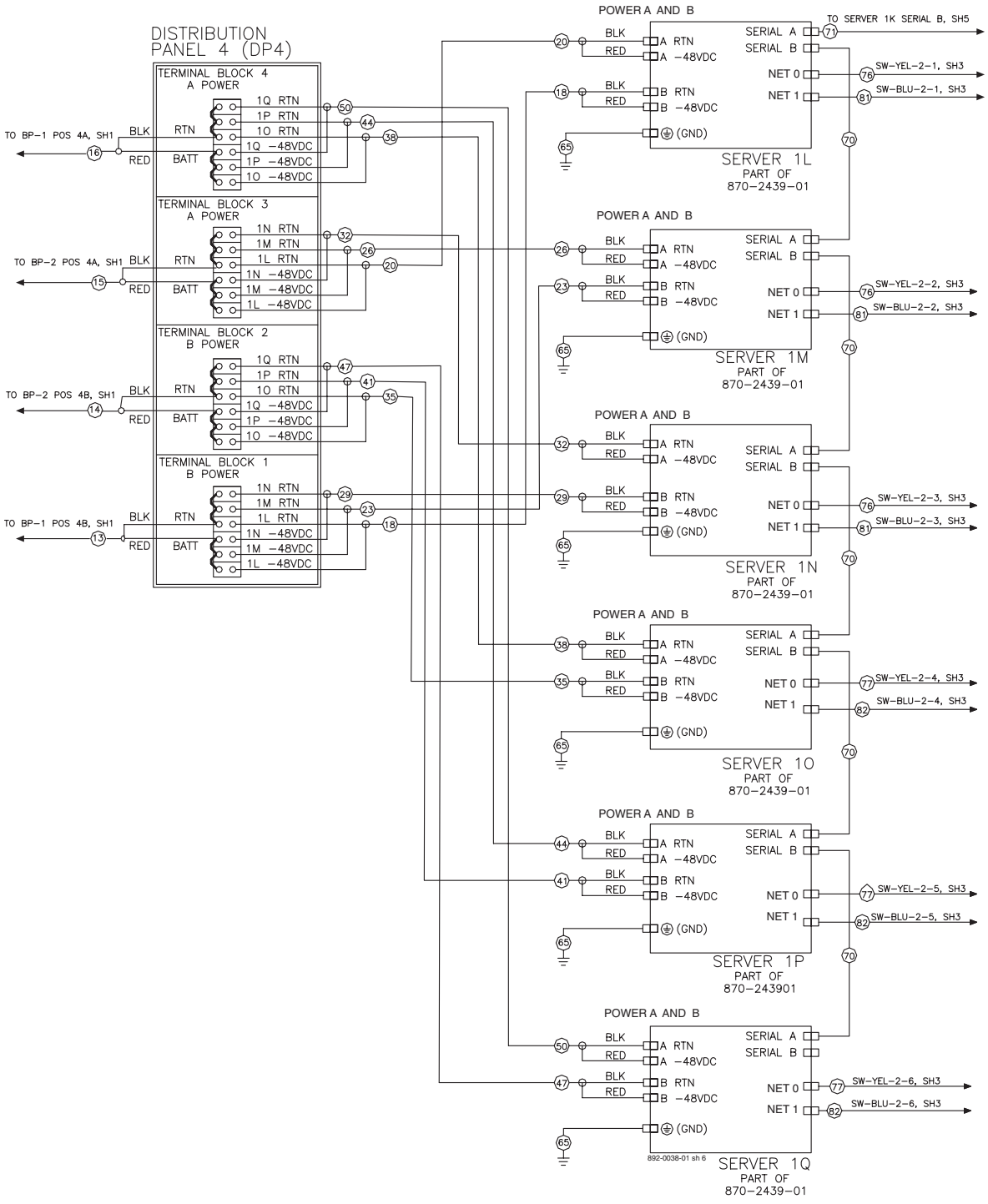

Table 2-9. ESP Cable Specifications

POWER

POWER CABLE PART NUMBERS				
ITEM NO.	TEKELEC P/N	QUANTITY	LENGTH	COMMENT
1	830-0881-01	1	31.00 INCHES	BP-1 POS 1B TO DP1 TB1
2	830-0881-02	1	33.00 INCHES	BP-2 POS 1B TO DP1 TB2
3	830-0881-03	1	35.00 INCHES	BP-2 POS 1A TO DP1 TB3
4	830-0881-04	1	33.00 INCHES	BP-1 POS 1A TO DP1 TB4
5	830-0881-05	1	50.00 INCHES	BP-1 POS 2B TO DP2 TB1
6	830-0881-06	1	52.00 INCHES	BP-2 POS 2B TO DP2 TB2
7	830-0881-07	1	53.50 INCHES	BP-2 POS 2A TO DP2 TB3
8	830-0881-08	1	51.50 INCHES	BP-1 POS 2A TO DP2 TB4
9	830-0881-09	1	81.00 INCHES	BP-1 POS 3B TO DP3 TB1
10	830-0881-10	1	83.00 INCHES	BP-2 POS 3B TO DP3 TB2
11	830-0881-11	1	84.00 INCHES	BP-2 POS 3A TO DP3 TB3
12	830-0881-12	1	82.00 INCHES	BP-1 POS 3A TO DP3 TB4
13	830-0881-13	1	97.00 INCHES	BP-1 POS 4B TO DP4 TB1
14	830-0881-14	1	99.00 INCHES	BP-2 POS 4B TO DP4 TB2
15	830-0881-15	1	99.00 INCHES	BP-2 POS 4A TO DP4 TB3
16	830-0881-16	1	97.00 INCHES	BP-1 POS 4A TO DP4 TB4
17	830-0882-02	1	42.50 INCHES	DP3 TB1 1F TO SERVER 1F B
18	830-0882-03	1	44.00 INCHES	DP4 TB1 1L TO SERVER 1L B
19	830-0882-05	1	52.50 INCHES	DP3 TB3 1F TO SERVER 1F A
20	830-0882-06	1	54.00 INCHES	DP4 TB3 1L TO SERVER 1L A
21	830-0882-07	1	37.50 INCHES	DP2 TB1 1A TO SERVER 1A B
22	830-0882-08	1	41.00 INCHES	DP3 TB1 1G TO SERVER 1G B
23	830-0882-09	1	42.00 INCHES	DP4 TB1 1M TO SERVER 1M B
24	830-0882-10	1	47.50 INCHES	DP2 TB3 1A TO SERVER 1A A
25	830-0882-11	1	51.00 INCHES	DP3 TB3 1G TO SERVER 1G A
26	830-0882-12	1	52.50 INCHES	DP4 TB3 1M TO SERVER 1M A
27	830-0882-13	1	39.50 INCHES	DP2 TB1 1B TO SERVER 1B B
28	830-0882-14	1	43.00 INCHES	DP3 TB1 1H TO SERVER 1H B
29	830-0882-15	1	41.50 INCHES	DP4 TB1 1N TO SERVER 1N B
30	830-0882-16	1	49.50 INCHES	DP2 TB3 1B TO SERVER 1B A
31	830-0882-17	1	53.00 INCHES	DP3 TB3 1H TO SERVER 1H A
32	830-0882-18	1	51.50 INCHES	DP4 TB3 1N TO SERVER 1N A
33	830-0882-19	1	45.50 INCHES	DP2 TB2 1C TO SERVER 1C B
34	830-0882-20	1	45.00 INCHES	DP3 TB2 1I TO SERVER 1I B
35	830-0882-21	1	43.50 INCHES	DP4 TB2 1O TO SERVER 1O B
36	830-0882-22	1	55.50 INCHES	DP2 TB4 1C TO SERVER 1C A
37	830-0882-23	1	55.00 INCHES	DP3 TB4 1I TO SERVER 1I A
38	830-0882-24	1	53.50 INCHES	DP4 TB4 1O TO SERVER 1O A
39	830-0882-25	1	47.50 INCHES	DP2 TB2 1D TO SERVER 1D B
40	830-0882-26	1	44.00 INCHES	DP3 TB2 1J TO SERVER 1J B
41	830-0882-27	1	42.50 INCHES	DP4 TB2 1P TO SERVER 1P B
42	830-0882-28	1	57.50 INCHES	DP2 TB4 1D TO SERVER 1D A
43	830-0882-29	1	54.00 INCHES	DP3 TB4 1J TO SERVER 1J A
44	830-0882-30	1	52.50 INCHES	DP4 TB4 1P TO SERVER 1P A
45	830-0882-31	1	50.00 INCHES	DP2 TB2 1E TO SERVER 1E B
46	830-0882-32	1	42.50 INCHES	DP3 TB2 1K TO SERVER 1K B
47	830-0882-33	1	41.00 INCHES	DP4 TB2 1Q TO SERVER 1Q B
48	830-0882-34	1	60.00 INCHES	DP2 TB4 1E TO SERVER 1E A
49	830-0882-35	1	52.50 INCHES	DP3 TB4 1K TO SERVER 1K A
50	830-0882-36	1	51.00 INCHES	DP4 TB4 1Q TO SERVER 1Q A
51	830-0886-01	1	44.50 INCHES	DP1 TB1 YEL1 TO YEL-1 B
52	830-0886-02	1	53.50 INCHES	DP1 TB3 YEL1 TO YEL-1 A
53	830-0886-03	1	48.50 INCHES	DP1 TB1 BLU1 TO BLU-1 B
54	830-0886-04	1	57.50 INCHES	DP1 TB3 BLU1 TO BLU-1 A
55	830-0886-05	1	57.00 INCHES	DP1 TB2 YEL2 TO YEL-2 B
56	830-0886-06	1	66.00 INCHES	DP1 TB4 YEL2 TO YEL-2 A
57	830-0886-07	1	61.00 INCHES	DP1 TB2 BLU2 TO BLU-2 B
58	830-0886-08	1	70.00 INCHES	DP1 TB4 BLU2 TO BLU-2 A
59	830-0869-07	1	80.00 INCHES	BP-1 POS 6A TO ROUTER YEL
60	830-0869-08	1	72.00 INCHES	BP-2 POS 6B TO ROUTER BLU
61	830-0715-01	1	SITE SPECIFIC	CHASSIS GROUND TO GROUND WINDOW
62	830-0830-01	2	N/A	CIRCUIT BREAKER TO FRAME GND
63	CHASSIS GND (FIELD ROUTED)	1	SITE SPECIFIC	
64	-48VDC AND 48V RTN (FIELD ROUTED)	8	SITE SPECIFIC	

892-0038-01_rev_2_sheet7

Table 2-10. ESP Cable Specifications

	CABLE PART NUMBERS				
	ITEM NO.	TEKELEC P/N	QUANTITY	LENGTH	COMMENT
POWER	65	830-0823-01	2	22.00 INCHES	ROUTER TO FRAME GND
	66	830-0823-02	17	18.00 INCHES	SERVER TO FRAME GND
	67	830-0823-03	4	22.00 INCHES	SWITCH TO FRAME GND
	68	NOT USED			
DATA	69	830-0836-02	2	48.00 INCHES	BREAKER ALARM TO BREAKOUT BOX
	70	830-0890-01	15	8.00 INCHES	CROSS-PINNED RJ45 TO RJ45
	71	830-0890-02	1	12.00 INCHES	CROSS-PINNED RJ45 TO RJ45
	72	830-0890-03	1	72.00 INCHES	CROSS-PINNED RJ45 TO RJ45
	73	830- 0724 -01	1	12.00 INCHES	STRAIGHT THRU RJ45 TO RJ45
	74	830-0888-11	1	3.00 INCHES	STRAIGHT THRU RJ45 TO RJ45 – YELLOW JACKET
	75	830-0888-02	7	66.00 INCHES	STRAIGHT THRU RJ45 TO RJ45 – YELLOW JACKET
	76	830-0888-03	6	72.00 INCHES	STRAIGHT THRU RJ45 TO RJ45 – YELLOW JACKET
	77	830-0888-04	7	78.00 INCHES	STRAIGHT THRU RJ45 TO RJ45 – YELLOW JACKET
	78	890-0890-04	1	72.00 INCHES	CROSS-PINNED RJ45 TO RJ45
	79	830-0889-11	1	3.00 INCHES	STRAIGHT THRU RJ45 TO RJ45 – BLUE JACKET
	80	830-0889-02	7	66.00 INCHES	STRAIGHT THRU RJ45 TO RJ45 – BLUE JACKET
	81	830-0889-03	6	72.00 INCHES	STRAIGHT THRU RJ45 TO RJ45 – BLUE JACKET
	82	830-0889-04	7	78.00 INCHES	STRAIGHT THRU RJ45 TO RJ45 – BLUE JACKET
	83	NOT USED			
	84	804-1426-01	1	N/A	BREAKOUT BOX W/ CABLE PART OF PCI CARD, 804-1426-01
	85	830-0788-XX	12	SITE SPECIFIC	YELLOW SWITCH PORTS 13X THRU 23X TO EAGLE STC
	86	PART OF 804-1573-01 830-0859-XX	5	N/A	DB25 TO RJ45 ADAPTER – COMES WITH NETRA T1 DC200 804-1516-01 CAN BE USED AS AN ALTERNATE D25/D25 M/M SITE SPECIFIC NULL MODEM SERIAL CABLE
	87		1	SITE SPECIFIC	
	88	CUSTOMER SUPPLIED	----	SITE SPECIFIC	TO CUSTOMER NETWORK -- RJ45 CONNECTION REQUIRED
	89	830-0723-XX	1	SITE SPECIFIC	STRAIGHT THROUGH J45 TO RJ45-LENGTH SITE SPECIFIC
	90	830-0724-XX	2	SITE SPECIFIC	CROSSOVER J45 TO RJ45-LENGTH SITE SPECIFIC

Integrated Sentinel ESP TO-FROM Table

Table 2-11. Integrated Sentinel ESP TO-FROM Table

Number	From	To	Cable Color and Part Number	Length	Notes
8 Port Break-Out Box (see Figure 2-6)					
86/87	PORT-0 DB25	EAGLE TERMINAL *TBD*	GRAY		SITE SPECIFIC
86/75	PORT-1 DB25	YELLLOW-ROUTER-CONSOLE RJ45	YELLOW 830-0888-02	5.5FT	REQUIRES ADAPTER TO RJ45
86/80	PORT-2 DB25	BLUE-ROUTER-CONSOLE RJ45	BLUE 830-0889-02	5.5FT	REQUIRES ADAPTER TO RJ45
69	PORT-3 DB25	BP-1-ALARM #4 SPADE	RED/BLACK 830-0836-02	4.0FT	POWER
69	PORT- 4 DB25	BP-2-ALARM #4 SPADE	RED/BLACK 830-0836-02	4.0FT	POWER
86/75	PORT-5 DB25	SW-YELLLOW-1-CONSOLE RJ45	YELLOW 830-0888-02	5.5FT	REQUIRES ADAPTER TO RJ45
86/81	PORT-6 DB25	BLUE-SW-1-CONSOLE R J-45	BLUE 830-0889-03	6.0FT	REQUIRES ADAPTER TO RJ45
86/73	PORT-7 DB25	ESP-1C-SERIAL A RJ45	GRAY 830-0724-06	6.0FT	REQUIRES ADAPTER TO RJ45
Expanded					
75	SW-YELLOW-1-24 RJ45	YELLLOW-ROUTER-NET 0/0 RJ45	YELLOW 830-0888-02	5.5FT	STRAIGHT THRU
79	SW-YELLOW-1-12 RJ45	BLUE-ROUTER-NET 0/0 RJ45	BLUE 830-0889-02	5.5FT	STRAIGHT THRU
Expanded 1A					
70	ESP-1A-SERIAL A RJ45	ESP-1B-SERIAL B RJ45	GRAY 830-0890-01	0.67FT	CROSS-PINNED
70	ESP-1A-SERIAL B RJ45	ESP-1B-SERIAL A RJ45	GRAY 830-0890-01	0.67FT	CROSS-PINNED
80	ESP-1A-NET-1 RJ45	BLUE-SW-1-1X RJ45	BLUE 830-0889-02	5.5FT	STRAIGHT THRU
75	ESP-1A-NET-0 RJ45	YELLLOW-SW-1-1X RJ45	YELLOW 830-0888-02	5.5FT	STRAIGHT THRU
Expanded 1B					
75	ESP-1B-NET-0 RJ45	YELLLOW-SW-1-2X RJ45	YELLOW 830-0888-02	5.5FT	STRAIGHT THRU
80	ESP-1B-NET-1 RJ45	BLUE-SW-1-2X RJ45	BLUE 830-0889-02	5.5FT	STRAIGHT THRU
Expanded 1C					
70	ESP-1C-SERIAL B RJ45	ESP-1D-SERIAL A RJ45	GRAY 830-0890-01	0.67FT	CROSS-PINNED

Number	From	To	Cable Color and Part Number	Length	Notes
75	ESP-1C-NET-0 RJ45	YELLLOW-1SW--3X RJ45	YELLOW 830-0888-02	5.5FT	STRAIGHT THRU
80	ESP-1C-NET-1 RJ45	BLUE-SW-1-3X RJ45	BLUE 830-0889-02	5.5FT	STRAIGHT THRU
Expanded 1D					
70	ESP-1D-SERIAL B RJ45	ESP-1E-SERIAL A RJ45	GRAY 830-0890-01	0.67FT	CROSS-PINNED
75	ESP-1D-NET-0 RJ45	YELLLOW-SW-1-4X RJ45	YELLOW 830-0888-02	5.5FT	STRAIGHT THRU
80	ESP-1D-NET-1 RJ45	BLUE-SW-1-4X RJ45	BLUE 830-0889-02	5.5FT	STRAIGHT THRU
Expanded 1E					
70	ESP-1E-SERIAL B RJ45	ESP-1F-SERIAL A RJ45	GRAY 830-0890-01	0.67FT	CROSS-PINNED
76	ESP-1E-NET-0 RJ45	YELLLOW-SW-1-5X RJ45	YELLOW 830-0888-03	6.0FT	STRAIGHT THRU
80	ESP-1E-NET-1 RJ45	BLUE-SW-1-5X RJ45	BLUE 830-0889-02	5.5FT	STRAIGHT THRU
Expanded 1F					
70	ESP-1F-SERIAL B RJ45	ESP-1G-SERIAL A RJ45	GRAY 830-0890-01	0.67FT	CROSS-PINNED
76	ESP-1F-NET-0 RJ45	YELLLOW-SW-1-6X RJ45	YELLOW 830-0888-03	6.0FT	STRAIGHT THRU
81	ESP-1F-NET-1 RJ45	BLUE-SW-1-6X RJ45	BLUE 830-0889-03	6.0FT	STRAIGHT THRU
Expanded 1G					
70	ESP-1G-SERIAL B RJ45	ESP-1H-SERIAL A RJ45	GRAY 830-0890-01	0.67FT	CROSS-PINNED
76	ESP-1G-NET-0 RJ45	YELLLOW-SW-1-7X RJ45	YELLOW 830-0888-03	6.0FT	STRAIGHT THRU
81	ESP-1G-NET-1 RJ45	BLUE-SW-1-7X RJ45	BLUE 830-0889-03	6.0FT	STRAIGHT THRU
Expanded 1H					
70	ESP-1H-SERIAL B RJ45	ESP-1I-SERIAL A RJ45	GRAY 830-0890-01	0.67FT	CROSS-PINNED
77	ESP-1H-NET-0 RJ45	SW-YELLLOW-SW-1-8 X RJ45	YELLOW 830-0888-04	6.5FT	STRAIGHT THRU
82	ESP-1H-NET-1 RJ45	BLUE-1-8X RJ45	BLUE 830-0889-04	6.5FT	STRAIGHT THRU
Expanded 1I					
70	ESP-1I-SERIAL B RJ45	ESP-1J-SERIAL A RJ45	GRAY 830-0890-01	0.67FT	CROSS-PINNED

Number	From	To	Cable Color and Part Number	Length	Notes
77	ESP-1I-NET-0 RJ45	YELLLOW-SW-1-9X RJ45	YELLOW 830-0888-04	6.5FT	STRAIGHT THRU
82	ESP-1I-NET-1 RJ45	BLUE-SW-1-9X RJ45	BLUE 830-0889-04	6.5FT	STRAIGHT THRU
Expanded 1J					
70	ESP-1J-SERIAL B RJ45	ESP-1K-SERIAL A RJ45	GRAY 830-0890-01	0.67FT	CROSS-PINNED
77	ESP-1J-NET-0 RJ45	YELLLOW-SW-1-10X RJ45	YELLOW 830-0888-04	6.5FT	STRAIGHT THRU
82	ESP-1J-NET-1 RJ45	BLUE-SW-1-10X RJ45	BLUE 830-0889-04	6.5FT	STRAIGHT THRU
Expanded 1K					
77	ESP-1K-NET-0 RJ45	YELLLOW-SW-1-11X RJ45	YELLOW 830-0888-04	6.5FT	STRAIGHT THRU
82	ESP-1K-NET-1 RJ45	BLUE-SW-1-11X RJ45	BLUE 830-0889-04	6.5FT	STRAIGHT THRU
Move to the Bottom Section of Servers ESP-1L through ESP-1Q					
Expanded 1L					
70	ESP-1L-SERIAL B RJ45	ESP-1M-SERIAL A RJ45	GRAY 830-0890-01	0.67FT	CROSS-PINNED
Expanded 1M					
70	ESP-1M-SERIAL B RJ45	ESP-1N-SERIAL A RJ45	GRAY 830-0890-01	0.67FT	CROSS-PINNED
Expanded 1N					
70	ESP-1N-SERIAL B RJ45	ESP-1O-SERIAL A RJ45	GRAY 830-0890-01	0.67FT	CROSS-PINNED
Expanded 1O					
70	ESP-1O-SERIAL B RJ45	ESP-1P-SERIAL A RJ45	GRAY 830-0890-01	0.67FT	CROSS-PINNED
Expanded 1P					
70	ESP-1P-SERIAL B RJ45	ESP-1Q-SERIAL A RJ45	GRAY 830-0890-01	0.67FT	CROSS-PINNED
Expanded 1Q					

Table 2-12. Upgrade Kit

Upgrade Kit					
79	BLUE-SW-1-BASE T1000 RJ45	BLUE-SW-2-BASE T1000 RJ45	BLUE 830-0889-01	1.0FT	STRAIGHT THRU
74	YELLOW-SW-1-BASE T1000 RJ45	YELLOW-SW-2-BASE T1000 RJ45	YELLOW 830-0888-01	1.0FT	STRAIGHT THRU
82	ESP-1Q-NET-1 RJ45	BLUE-SW-2-6X RJ45	BLUE 830-0889-04	6.5FT	STRAIGHT THRU
77	ESP-1Q-NET-0 RJ45	YELLLOW-SW-2-6X RJ45	YELLOW 830-0888-04	6.5FT	STRAIGHT THRU
82	ESP-1P-NET-1 RJ45	BLUE-SW-2-5X RJ45	BLUE 830-0889-04	6.5FT	STRAIGHT THRU
77	ESP-1P-NET-0 RJ45	YELLLOW-SW-2-5X RJ45	YELLOW 830-0888-04	6.5FT	STRAIGHT THRU
82	ESP-1O-NET-1 RJ45	BLUE-SW-2-4X RJ45	BLUE 830-0889-04	6.5FT	STRAIGHT THRU
77	ESP-1O-NET-0 RJ45	YELLLOW-SW-2-4X RJ45	YELLOW 830-0888-04	6.5FT	STRAIGHT THRU
81	ESP-1N-NET-1 RJ45	BLUE-SW-2-3X RJ45	BLUE 830-0889-03	6.0FT	STRAIGHT THRU
76	ESP-1N-NET-0 RJ45	YELLLOW-SW-2-3X RJ45	YELLOW 830-0888-03	6.0FT	STRAIGHT THRU
81	ESP-1M-NET-1 RJ45	BLUE-SW-2-2X RJ45	BLUE 830-0889-03	6.0FT	STRAIGHT THRU
76	ESP-1M-NET-0 RJ45	YELLLOW-SW-2-2X RJ45	YELLOW 830-0888-03	6.0FT	STRAIGHT THRU
81	ESP-1L-NET-1 RJ45	BLUE-2-1X RJ45	BLUE 830-0889-03	6.0FT	STRAIGHT THRU
76	ESP-1L-NET-0 RJ45	YELLLOW-SW-2-1X RJ45	YELLOW 830-0888-03	6.0FT	STRAIGHT THRU
71	ESP-1K-SERIAL B RJ45	ESP-1L-SERIAL A RJ45	GRAY 830-0890-02	1.0FT	CROSS-PINNED
78	BLUE-SW-2 CONSOLE RJ45	BLUE-ROUTER AUX RJ45	GRAY 830-0890-04	6.0FT	CROSS-PINNED
72	YELLOW-SW-2-CONSOLE RJ45	ROUTER-YELLLOWAUX RJ45	GRAY 830-0890-03	6.0FT	CROSS-PINNED

The next section addresses the installation of the Sentinel Site Collector Frame, i2000.

Installing Non-integrated Sentinel Hardware

Non-integrated Sentinel consists of user workstations, Signaling Transfer Points (STPs), probes, site collector frame containing Netra-based Flight Recorder servers, and other SS7 network equipment and a site collector frame.

Figure 2-25. Sentinel Probe

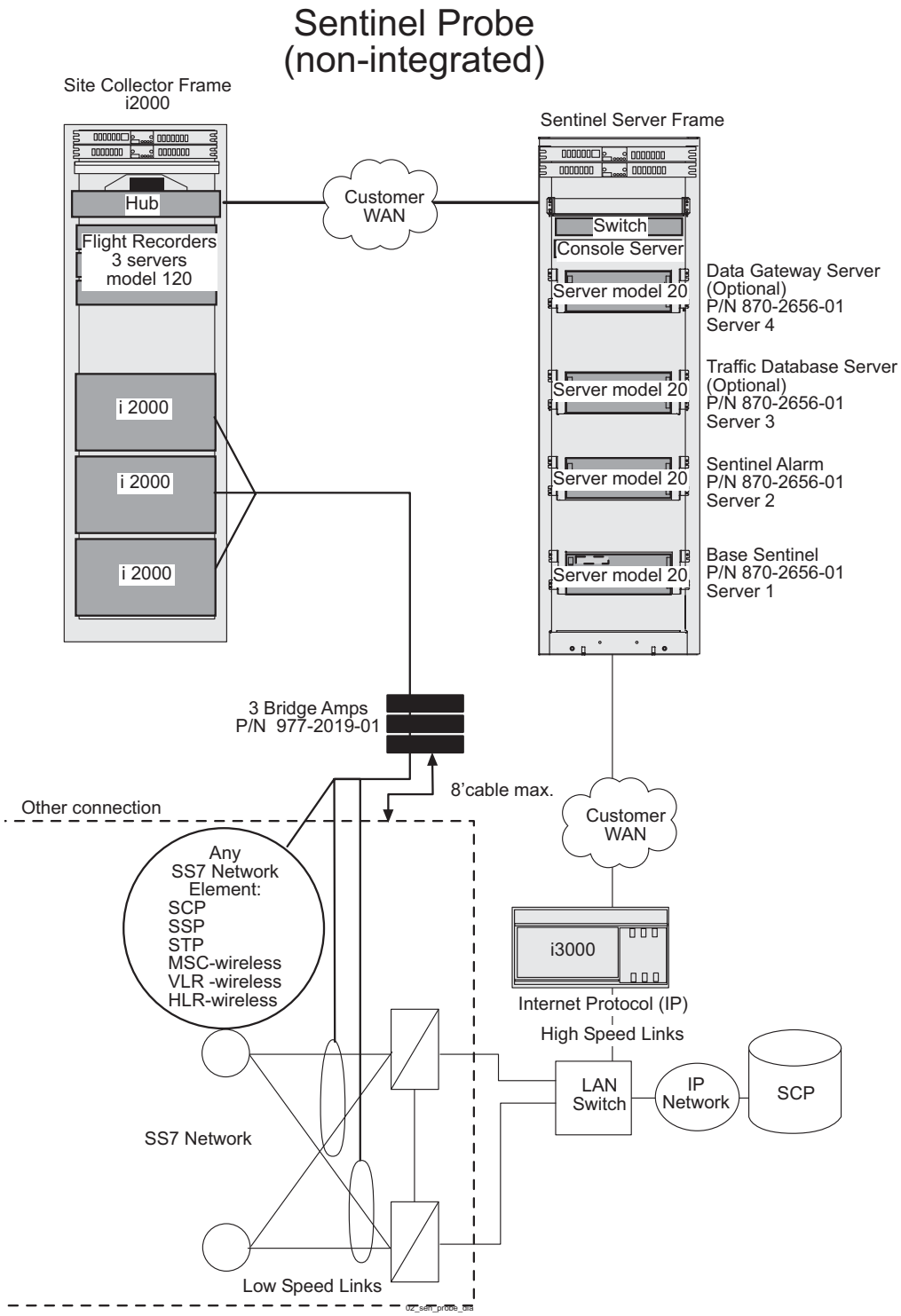

NOTE: If Integrated Sentinel (EAGLE 5 SAS and an ESP) is part of the system, the Sentinel i2000 Site Collector frame may not be used.

When maximally configured the Probed Site Collector Frame contains:

- 2 Breaker Panels (P/N 870-2248-04)
- 1 Network Hub (P/N 870-2224-01)
- 3 Model 120 Servers (known as flight recorders).The first server (A) contains an serial asynchronous interface adapter card with a serial cable connected to an 8 port break-out box.
- Up to 3 i2000 servers (shelves) (P/N 955-1003-02).

The i2000 servers are never shipped in the frame and are installed on site. The i2000, shelf A is installed from the rear of the frame at the bottom of the frame. If other i2000 shelves are installed they are also installed from the rear of the frame with the second i2000, shelf B, above the first i2000 shelf A. The third i2000 shelf C is installed above the second i2000 shelf B. All i2000 shelves related to the site collector frames are DC powered.

Printed Circuit Boards (PCBs) for the i2000 are installed on site. See Figure 2-26, on page 2-41 for detailed information.

For more information on the i2000 shelf see *Signalling/Cellular Generic Hardware Reference*.

Figure 2-26. Site Collector, i2000 Frame

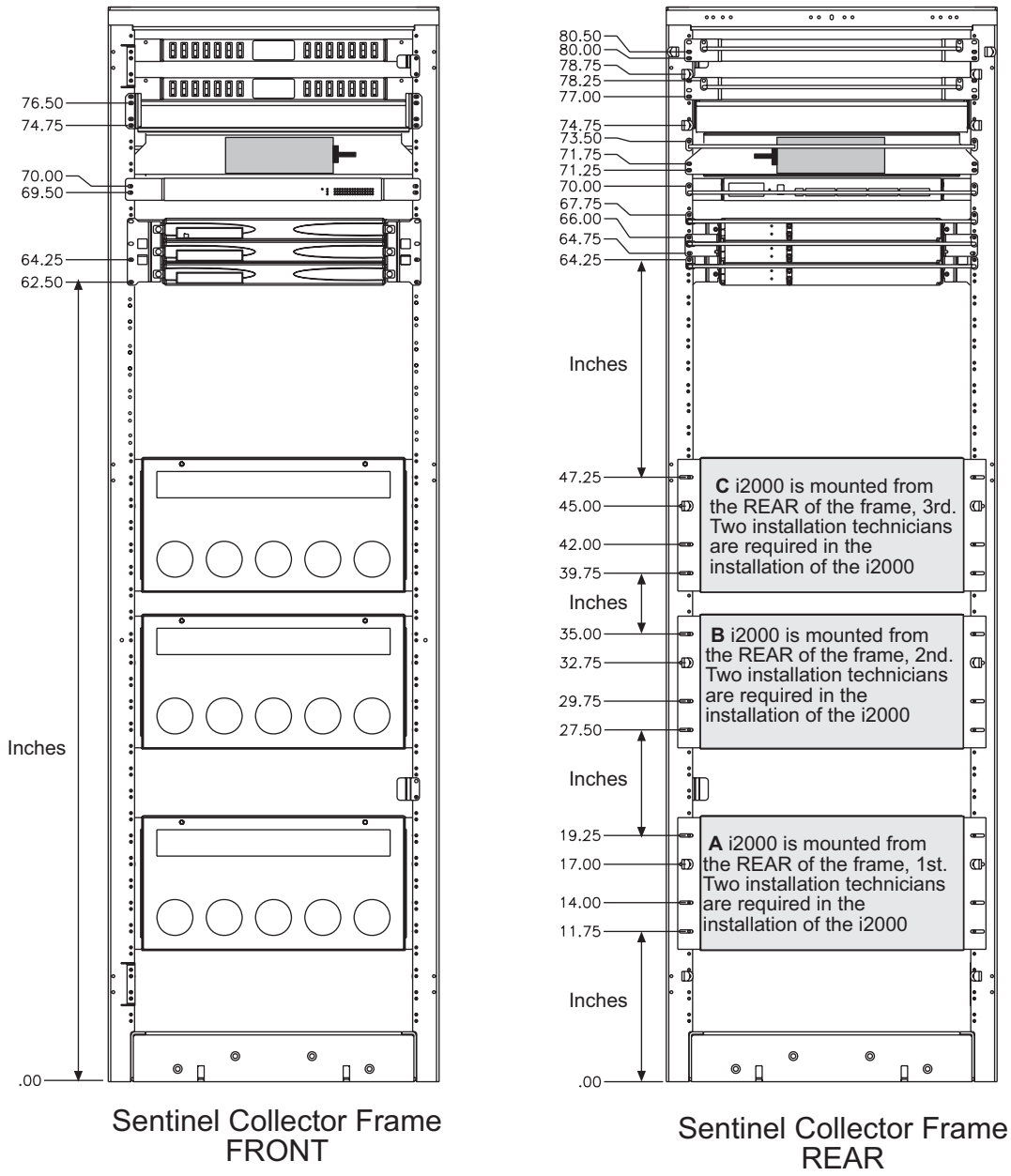

All measurements in Figure 2-26 are in inches. The i2000 shelf weighs approximately 44 kilos or 96.8lbs and requires two technicians to install it properly from the rear of the frame. Use four 12-24 0.75 inch (P/N 601-0010-02) screws, with a captive external tooth lock washers, on each side for a total of eight screws per shelf.

Figure 2-27. Site Collector, i2000 Frame

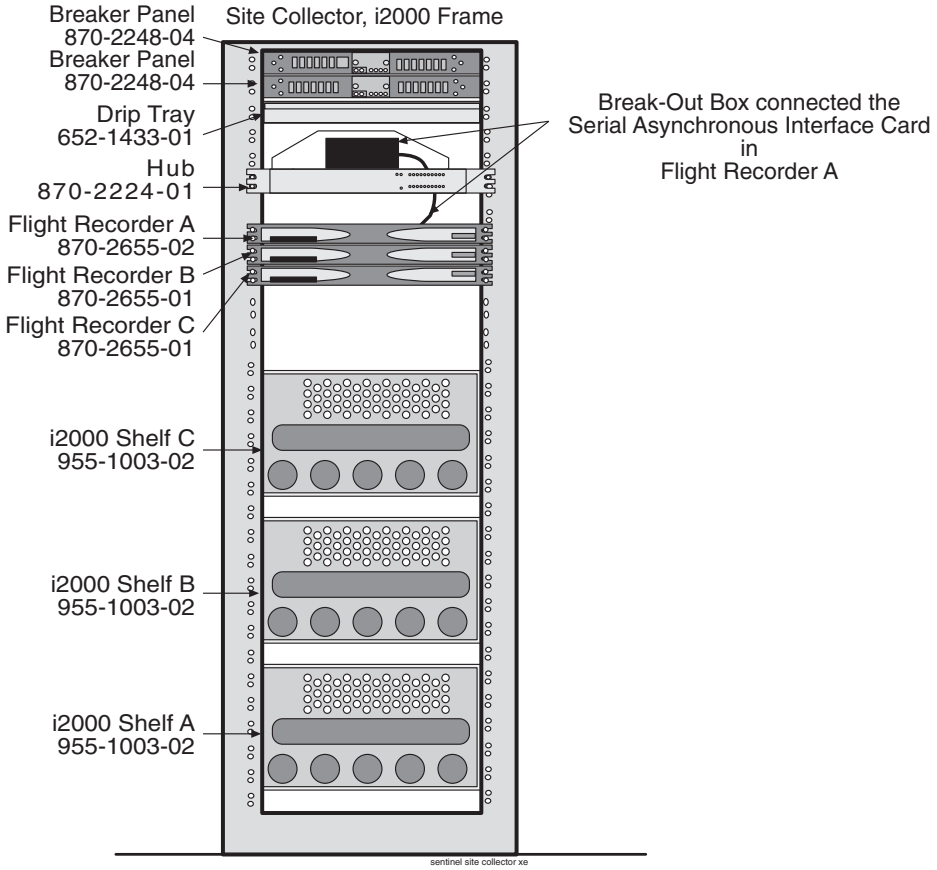

Site Collector, i2000 Frame

The Sentinel site collector frame arrives at the site partially populated and internally cabled to support; breaker panels, network hubs, flight recorders (servers) A, B, and C, and up to three i2000 server shelves. The i2000 shelves are installed at the site and never shipped in the frame.

Breaker Panels (2)(P/N 870-2248-04)

NOTE: Breaker Panels (P/N 870-2248-XX) are the breaker panels in frames that support Sentinel products. See the information and the illustrations beginning with Figure 2-5, on page 2-11. These pages are referenced when breaker panels are referred to. The wiring diagrams and cable configurations are different but the breaker panels are typical. Individual breaker panels are labeled on the finger guard, over the breaker, with associated information.

Site Collector, Break-Out Box

Flight recorder (server A)(P/N 870-2655-02), in the site collector frame is the top server and contains an serial asynchronous interface card (P/N 804-1426-01) connected to an eight port break-out box. The break-out box is located above the hub and below the breaker panels.

Service access to components is provided through the break-out box.

Figure 2-28. Break-Out Box Assembly

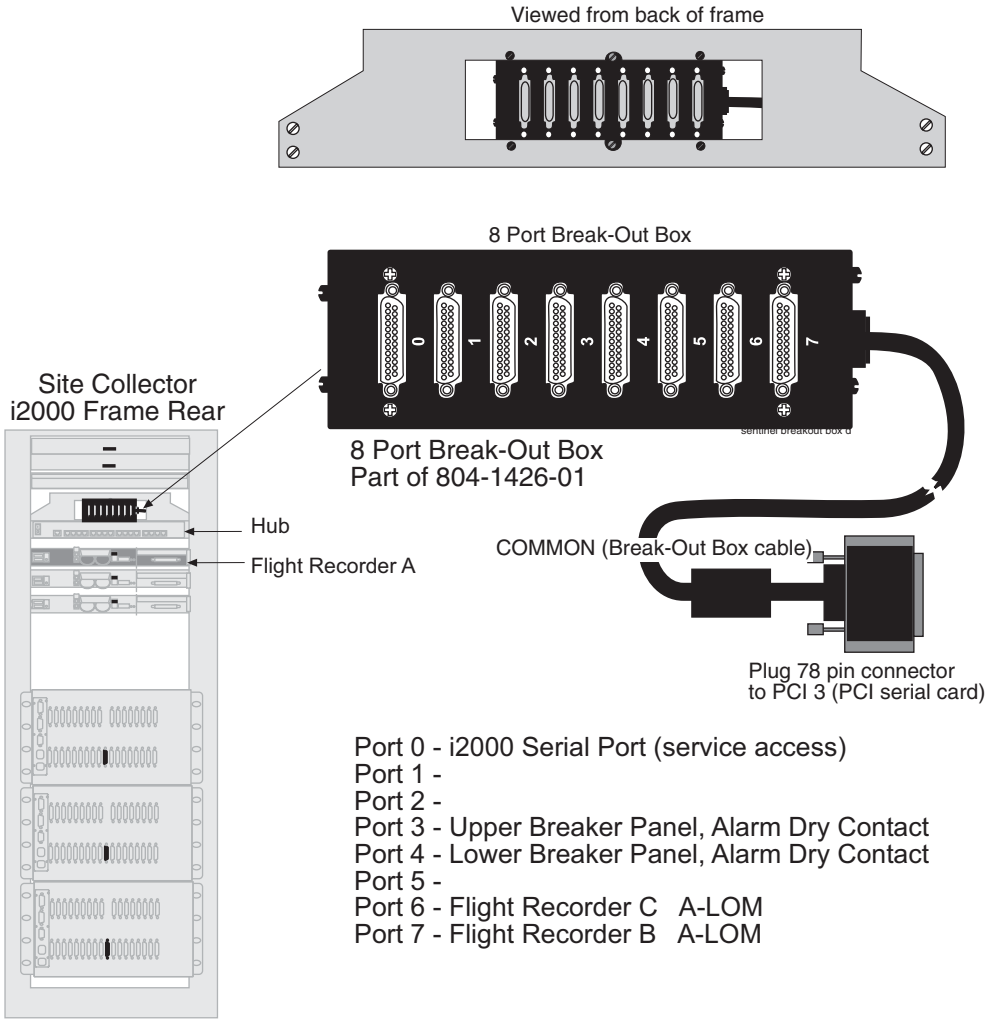

Hub

The hub is NEBS compliant and provides 16 RJ45 ports per hub. The dual-speed network chip enables the hub to identify and accept either 10/100MB signals on a per-port basis. Each RJ45 port is independent to match the speed of the server, providing flexibility in transition to Ethernet speeds. The hub is pre-installed from the front of the frame during manufacturing.

Figure 2-29. HUB (P/N 870-2224-01)

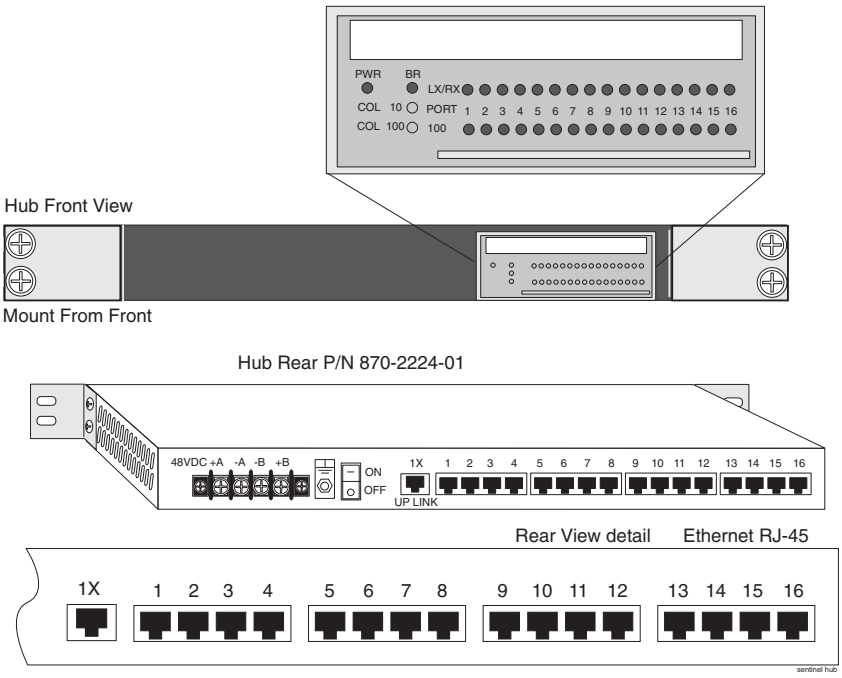

The frame grounding stud are located on the rear of the hub and the provided cable attaches to the side of the frame.

Flight Recorders

NOTE: Model 120, (flight recorder): (Server A P/N 870-2655-02 and Server B P/N 870-2655-01) are servers in the site collector frames that support Sentinel products. See the information and the illustrations beginning on Figure 2-13, on page 2-23 referenced when model 120, ESP Servers, are referred to.

Up to three flight recorders (model 120 servers) may populate a site collector frame that is maximally configured. The top server is referred to as A (P/N 870-2655-02), the middle B (P/N 870-2655-01) and the bottom server is referred to as C (P/N 870-2655-01).

Flight recorder A (P/N 870-2655-02) contains a serial PCI card (P/N 804-1426-01) with serial asynchronous interface connected to an 8-Port break-out box.

There are different configurations possible in the site collector frame. For illustrations of the combinations of flight recorders (model 120 servers) available in a site collector frame see Figure 2-30 on page 2-45.

Figure 2-30. Flight Recorders A, B, and C Cabling

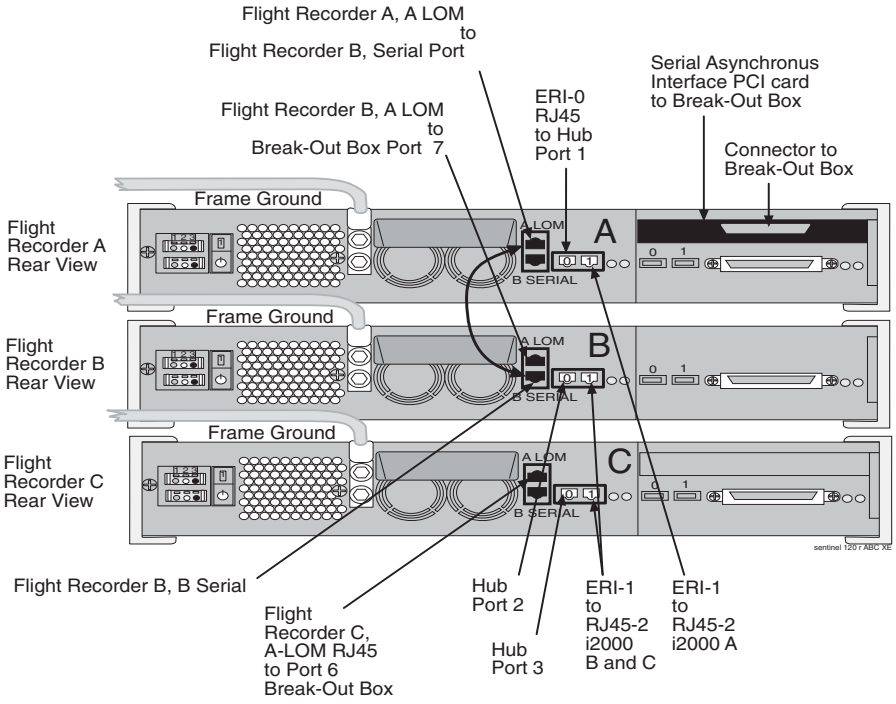

See Figure 2-13 for installation information on the flight recorders (model 120 servers).

Figure 2-31. Site Collector Frame, i2000 Cabling

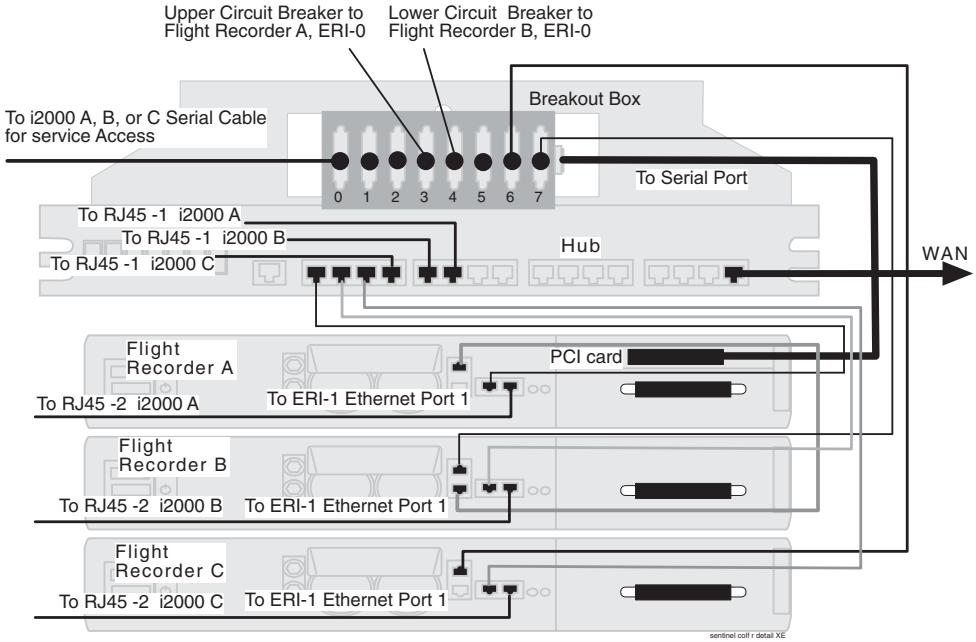

i2000 Shelves

The i2000 shelves (P/N 955-1003-02) are not shipped in the frame. Printed circuit boards are not shipped in the i2000 and must be installed on site. All i2000 shelves are packaged in a cardboard container, and then packed and shipped in a wooded crate. The first i2000 shelf is installed from the rear of the frame at the bottom of the frame, i2000 shelf **A**. If other i2000 shelves are to be installed they are installed from the rear of the frame with the second i2000 shelf **B** above the first i2000 shelf **A**. The third i2000 shelf **C** is installed above the second i2000 shelf **B**. For more information on the i2000 shelf refer to *Signalling/Cellular Generic Hardware Reference* and see Figure 2-26, on page 2-41 through Figure 2-36, on page 2-51.

Figure 2-32. i2000 Shelf

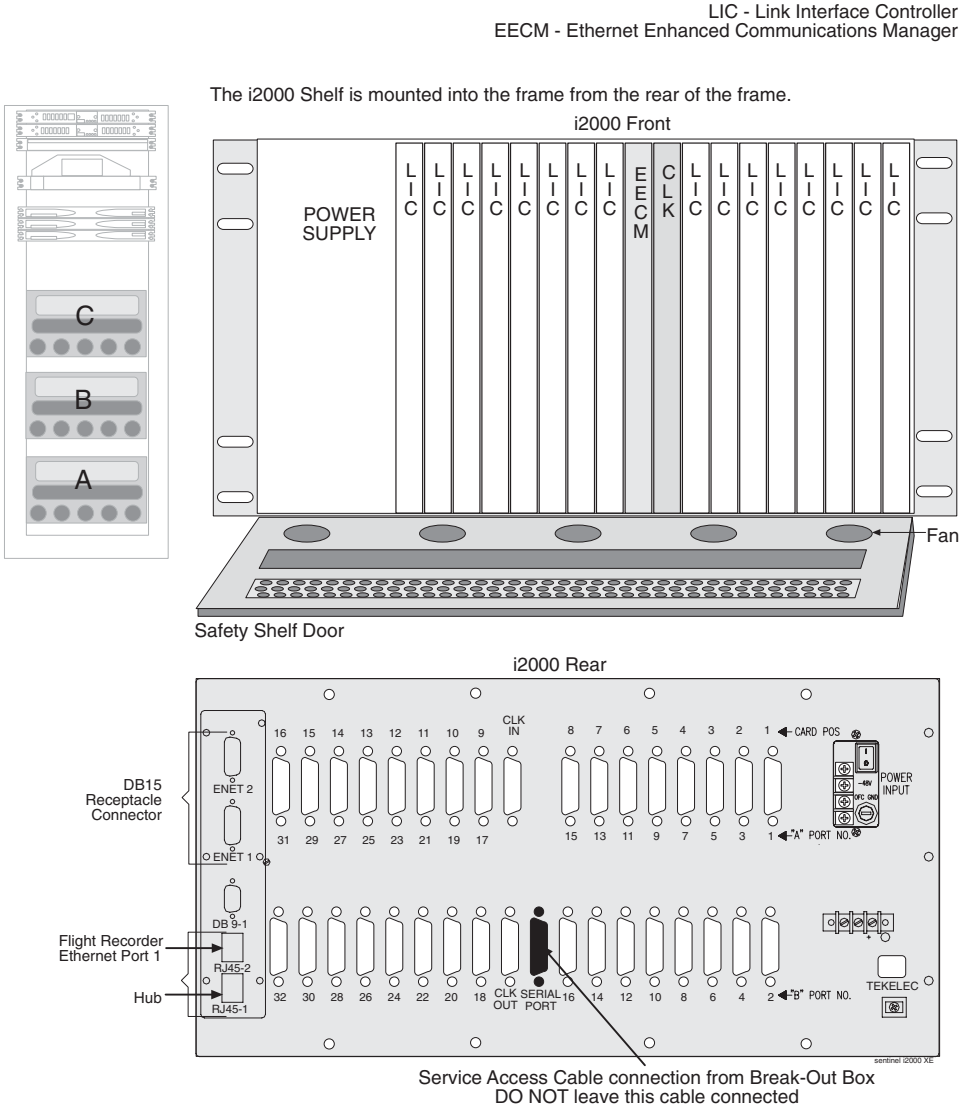

Figure 2-33. i2000 Shelf Installation

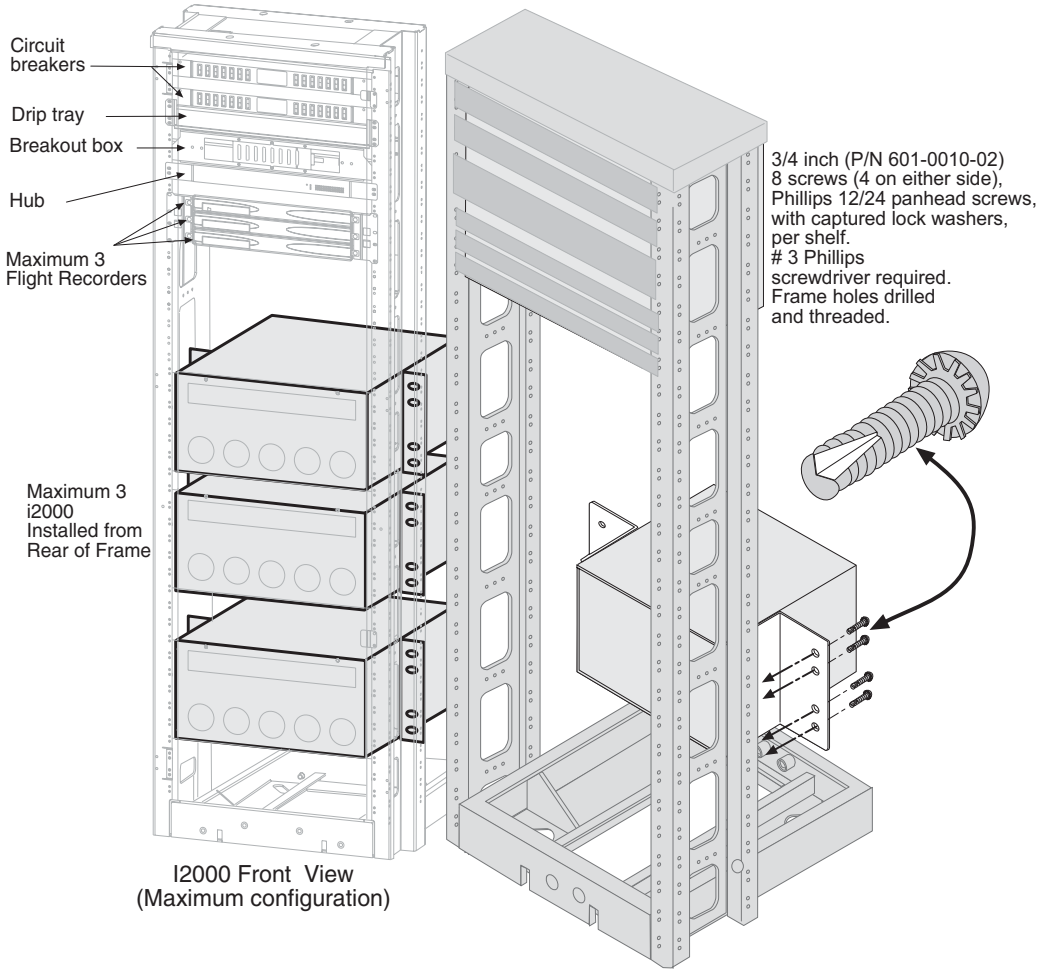

Figure 2-34. Site Collector Frame, Rear

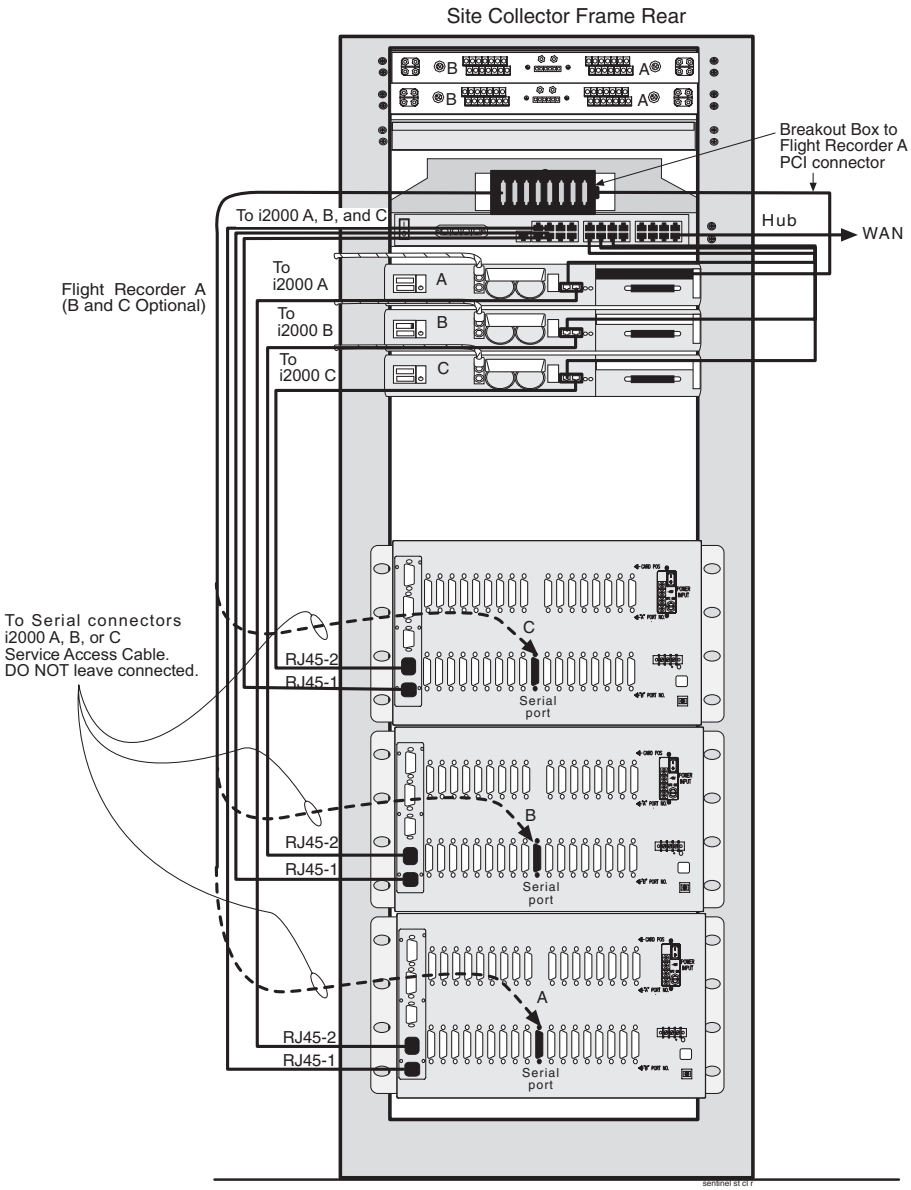

Site Collector, i2000 Frame, Interconnect

The Sentinel site collector frame can interconnect with any STP frame. For the Sentinel site collector i2000 interconnect diagrams see Figure 2-35 on page 2-50 through Figure 2-37, on page 2-52. Table 2-13 on page 2-53 contains the cable legend.

Figure 2-35. Site Collector, BP

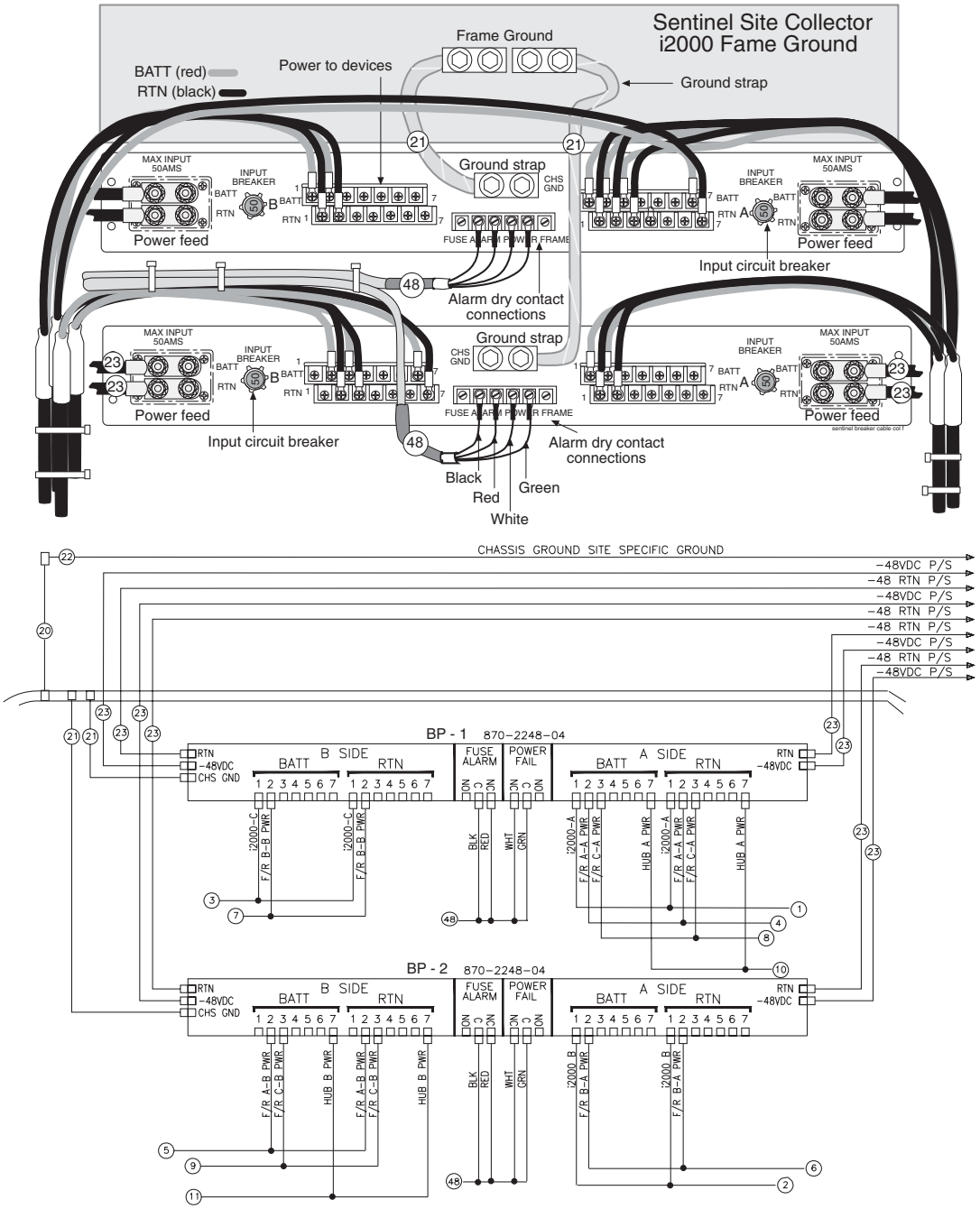

Figure 2-36. Site Collector, Interconnect

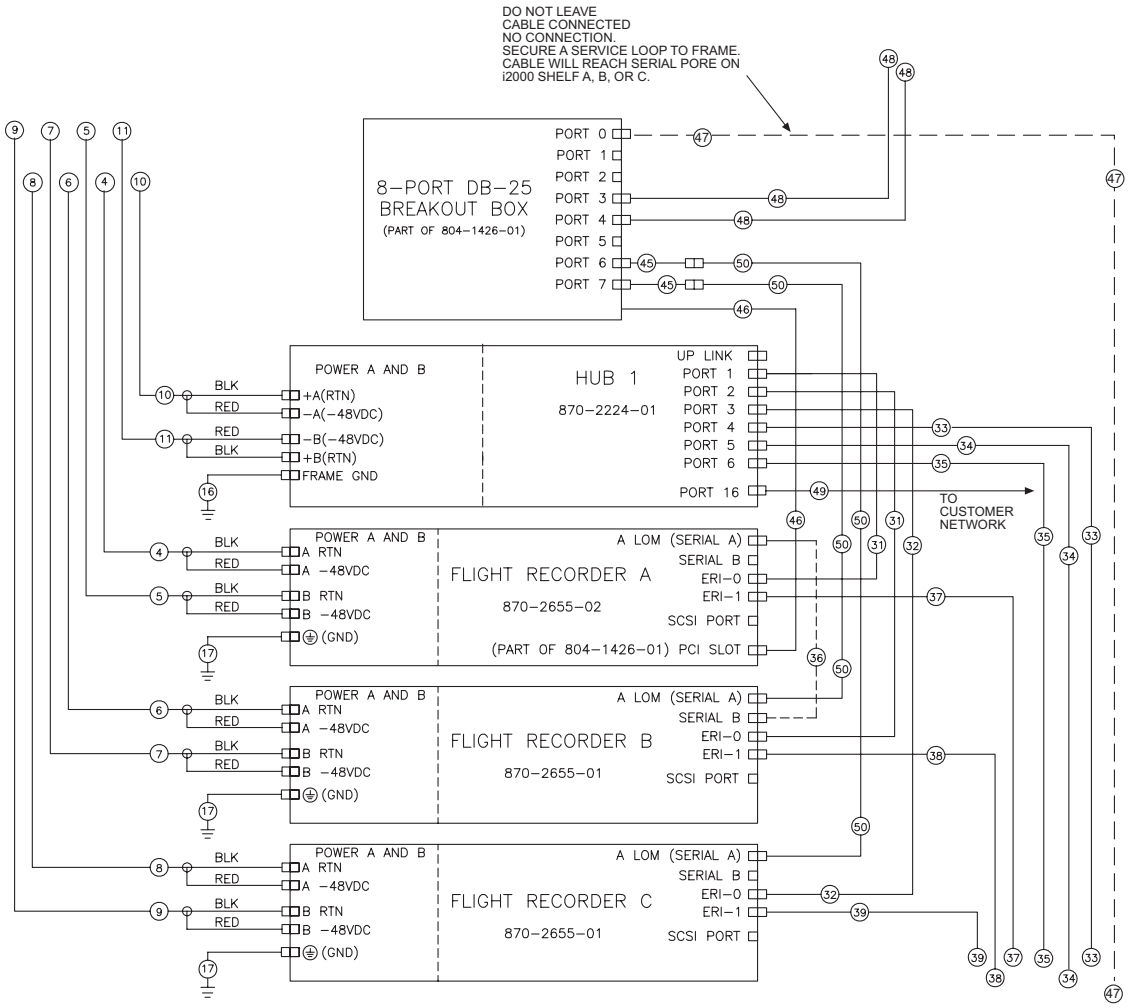

Figure 2-37. Site Collector, Interconnect

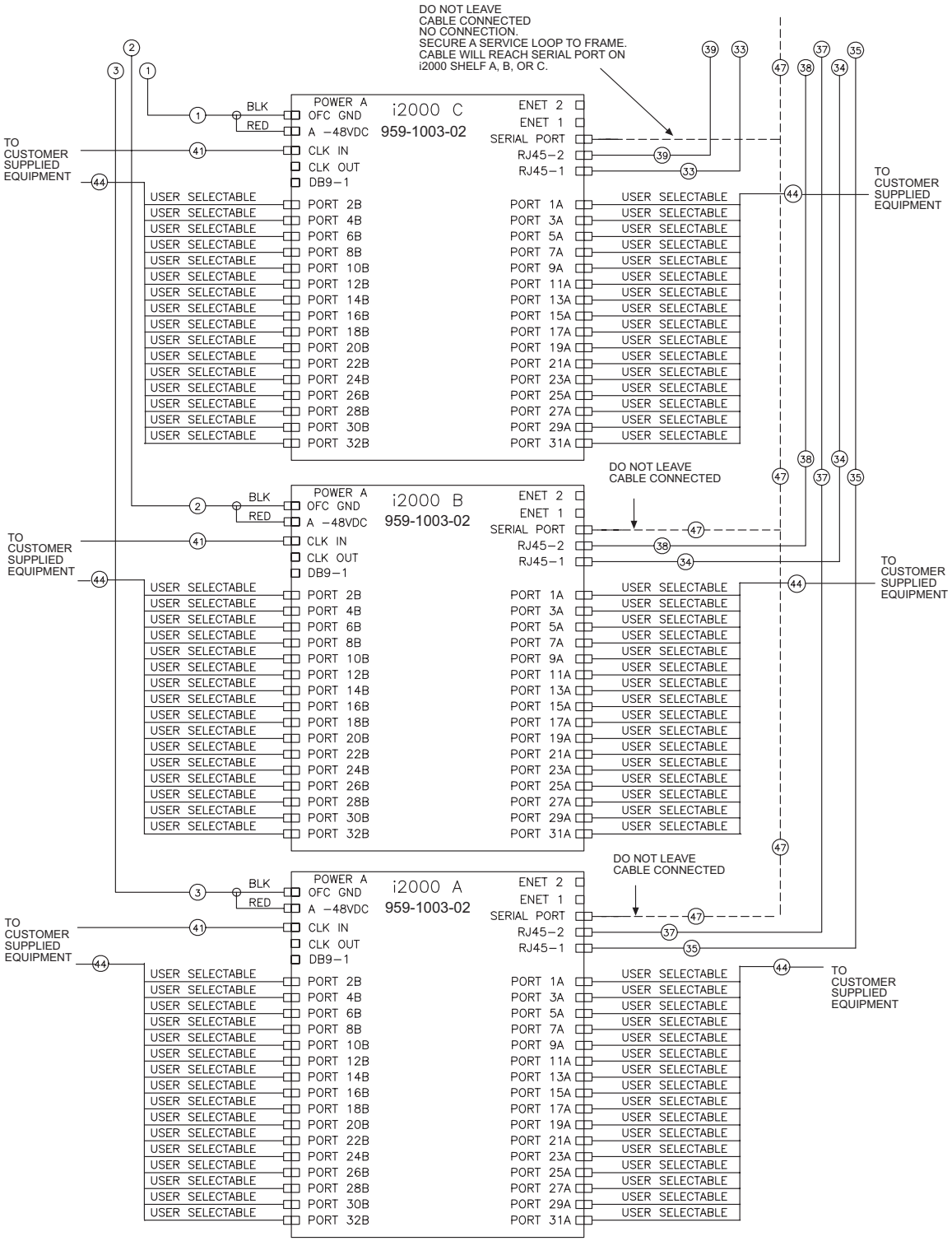

Table 2-13. Site Collector Cable Specifications

TABLE A – POWER/GROUND CABLE PART NUMBERS

ITEM NO.	TEKELEC P/N	QUANTITY	LENGTH	COMMENT
1	830-0929-03	1	77.00 INCHES	BP-1 POS 1B TO i2000 POS C
2	830-0929-02	1	80.00 INCHES	BP-2 POS 1A TO i2000 POS B
3	830-0929-01	1	98.00 INCHES	BP-1 POS 1A TO i2000 POS A
4	830-0930-01	1	50.00 INCHES	BP-1 POS 2A TO F/R A-A POWER
5	830-0930-02	1	41.00 INCHES	BP-2 POS 2B TO F/R A-B POWER
6	830-0930-03	1	49.00 INCHES	BP-2 POS 2A TO F/R B-A POWER
7	830-0930-04	1	46.00 INCHES	BP-1 POS 2B TO F/R B-B POWER
8	830-0930-05	1	54.00 INCHES	BP-1 POS 3A TO F/R C-A POWER
9	830-0930-06	1	45.00 INCHES	BP-2 POS 3B TO F/R C-B POWER
10	830-0868-17	1	45.00 INCHES	BP-1 POS 7A TO HUB A POWER
11	830-0868-18	1	36.00 INCHES	BP-2 POS 7B TO HUB B POWER
12	NOT USED			
13	NOT USED			
14	NOT USED			
15	NOT USED			
16	830-0822-01	1	14.38 INCHES	HUB TO FRAME GROUND
17	830-0823-02	3	18.00 INCHES	F/R TO FRAME GROUND
18	NOT USED			
19	NOT USED			
20	830-0715-01	1	SITE SPECIFIC	CHASSIS GROUND TO MAIN GROUND
21	830-0830-01	2	N/A	CIRCUIT BREAKER TO FRAME GROUND
22	CHASSIS GND (FIELD ROUTED)	1	SITE SPECIFIC	SEE TABLE D
23	-48VDC AND 48V RTN (FIELD ROUTED)	8	SITE SPECIFIC	SEE TABLE E
24	NOT USED			
25	NOT USED			
26	NOT USED			
27	NOT USED			
28	NOT USED			
29	NOT USED			
30	NOT USED			

TABLE C – DATA CABLE PART NUMBERS

ITEM NO.	TEKELEC P/N	QUANTITY	LENGTH	COMMENT
31	830-0724-66	2	48.00 INCHES	STRAIGHT THRU RJ45 TO RJ45 FROM: F/R A ERI-0 TO: HUB PORT 1 FROM: F/R B ERI-0 TO: HUB PORT 2
32	830-0724-01	1	60.00 INCHES	STRAIGHT THRU RJ45 TO RJ45 FROM: F/R C ERI-0 TO: HUB PORT 3
33	830-0724-06	1	72.00 INCHES	STRAIGHT THRU RJ45 TO RJ45 FROM: i2000 C PORT RJ45-1 TO: HUB PORT 4
34	830-0724-07	1	84.00 INCHES	STRAIGHT THRU RJ45 TO RJ45 FROM: i2000 B PORT RJ45-1 TO: HUB PORT 5
35	830-0724-67	1	96.00 INCHES	STRAIGHT THRU RJ45 TO RJ45 FROM: i2000 A PORT RJ45-1 TO: HUB PORT 6
36	830-0890-05	1	8.00 INCHES	CROSS PINNED RJ45 TO RJ45 FROM: F/R A A LOM TO: F/R B SERIAL B
37	830-0723-63	1	96.00 INCHES	CROSSOVER RJ45 TO RJ45 FROM: F/R A ERI-1 TO: i2000 A PORT RJ45-2
38	830-0723-64	1	84.00 INCHES	CROSSOVER RJ45 TO RJ45 FROM: F/R B ERI-1 TO: i2000 B PORT RJ45-2
39	830-0723-65	1	72.00 INCHES	CROSSOVER RJ45 TO RJ45 FROM: F/R C ERI-1 TO: i2000 C PORT RJ45-2
40	NOT USED			
41	958-0551-XX	A/R	SITE SPECIFIC	CLOCK CABLE (i2000 SHELF)
42	NOT USED			
43	NOT USED			
44	SEE TABLE B	A/R	SITE SPECIFIC	LINK INTERFACE CABLES USER SELECTABLE
45	804-1516-01	2	N/A	ADAPTER DB25 TO RJ45 TO:BREAKOUT BOX PORTS 6 AND 7
46	PART OF 804-1426-01	1	SITE SPECIFIC	BREAKOUT BOX W/ CABLE (PART OF PCI CARD PN 804-1426-01) CONNECTS TO THE 78 PIN CONNECTOR IN PCI SLOT
47	830-0859-02	1	120 INCHES	DB25 TO DB25 SERIAL CABLE FROM: BREAKOUT BOX PORT 0 TO: i2000 A, B OR C SERIAL PORT
48	830-0836-03	2	60.00 INCHES	BREAKER ALARM DB25 TO RING TERMINALS FROM: BREAKOUT BOX PORT 3 TO: BP 1 ALARM FROM: BREAKOUT BOX PORT 4 TO: BP 2 ALARM
49	830-0724-XX	1	SITE SPECIFIC	TO CUSTOMER NETWORK – RJ45 STRAIGHT THRU
50	830-0724-06	2	72.00 INCHES	STRAIGHT THROUGH RJ45 TO RJ45 FROM: BREAKOUT BOX PORT 7 TO: F/R B- A LOM FROM: BREAKOUT BOX PORT 6 TO: F/R C- A LOM

Installng the Sentinel Server Frame

The Sentinel Server Frame contains the Base Sentinel Server and the Sentinel Alarm Management System, and optional servers. The Base Sentinel Server (BSS) and the Sentinel Alarm Management System (SAMS) are required for both the Integrated and Non-Integrated Sentinel products. The Sentinel Server Frame is site specific and can be populated with a variety of options relating to the configuration and provisioning of the Model 20 server.

The frame containing the Model 20 is the Sentinel Server Frame.

The two optional servers are:

- Traffic Database Server (TDS)
- Data Gateway Server (DGS)

The other optional servers listed directly above may be configured and linked in various combinations.Traffic Database Servers can be Netra-based or Tekelec 1000-based servers. For information on Tekelec 1000-based TDS, see *TekServer Platform Services Hardware Manual*.

When maximally configured the Server Frame contains:

- **2** Breaker Panels (P/N 870-2248-06)
- **1** Ethernet Switch (P/N 804-1580-01)
- **1** Console Server (P/N 870-2742-01)
- **4** Model 20 servers (P/N 870-2656-0x)

Figure 2-38. Sentinel Server Frame

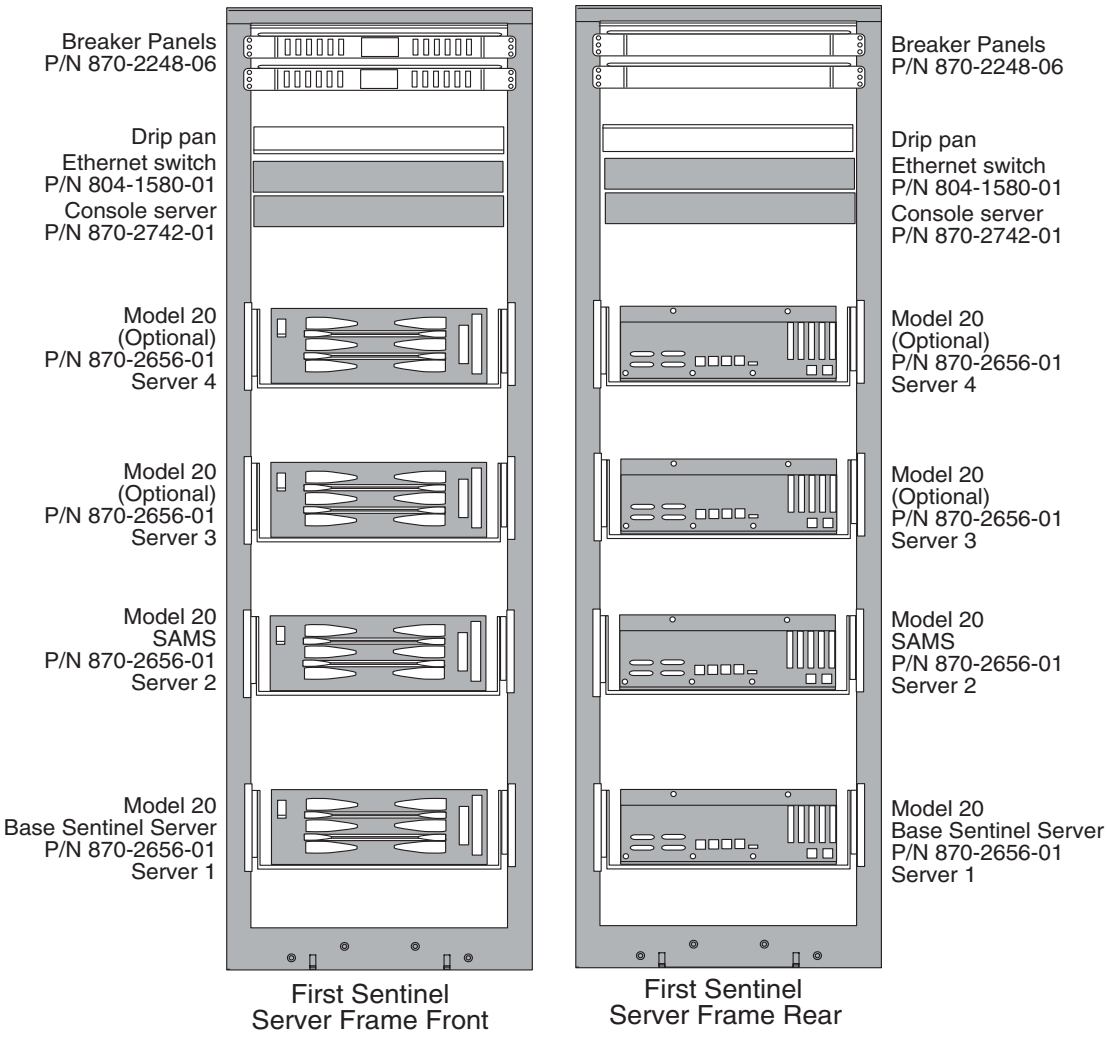

Table 2-14. Server Frame, Acronyms

Acronym	Name	Equipment
SSF	Sentinel Server Frame	Frame plus model 20 Server
BSS	Base Sentinel Server	Model 20 Server
SAMS	Sentinel Alarm Management System	
DGS	Data Gateway Server (optional)	
TDS	Traffic Database Server (optional) **NOTE: Beginning with Sentinel 11.2, the Traffic Database Server can be Netra-based or Tekelec 1000 based. Tekelec 1000-based TDS can be in an AC or DC environment. For information on Tekelec 1000-based TDS, see the *TekServer Platform Services Hardware Manual*.**	

Server Frame, BP

Breaker Panels (2)(P/N 870-2248-06) are the breaker panels in Sentinel server frames that support Sentinel products.

NOTE: Breaker Panels (P/N 870-2248-XX) are the breaker panels in frames that support Sentinel products. See the information and the illustrations beginning with Figure 2-5, on page 2-11. These pages are referenced when breaker panels are referred to. The wiring diagrams and cable configurations are different but the breaker panels are typical. Individual breaker panels are labeled on the finger guard over the breaker with associated information.

Server Frame, Switch

Ethernet switch (P/N 804-1580-01) is part of assembly (P/N 870-2441-01) in the Sentinel Server Frame to support Sentinel products. See the information and the illustration Figure 2-39, on page 2-56.

Figure 2-39. Ethernet Switch (P/N 804-1580-01)

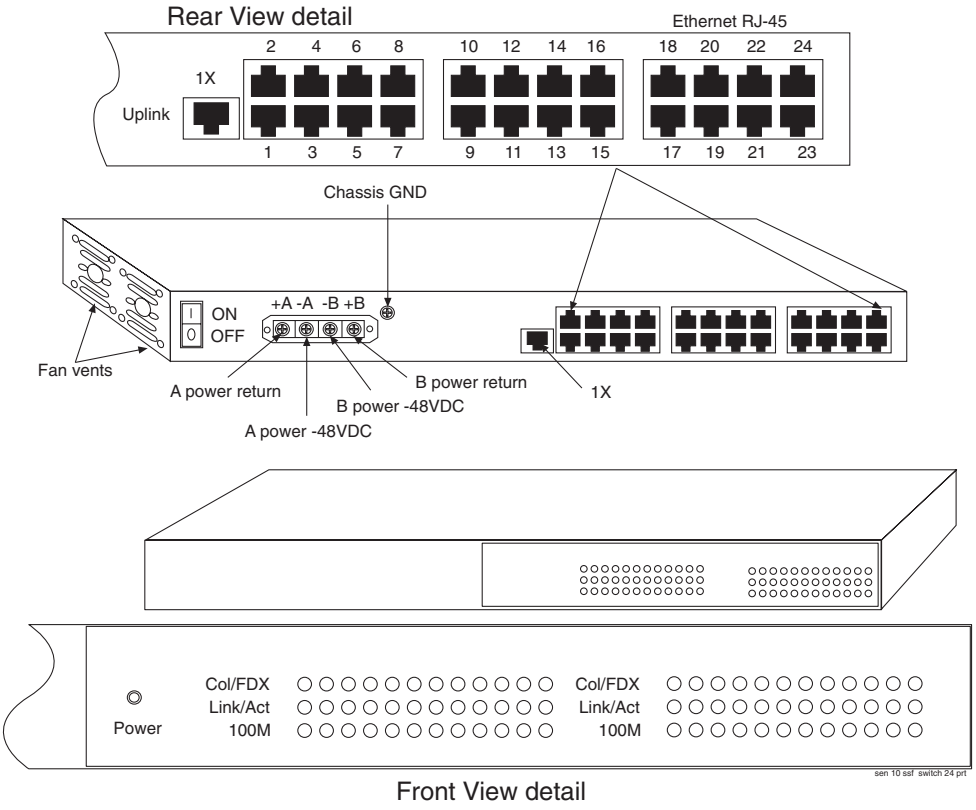
Rear View detail
Ethernet RJ-45
2 4 6 8
10 12 14 16
18 20 22 24
1X
Uplink
1 3 5 7
9 11 13 15
17 19 21 23
Chassis GND
ON
OFF
+A -A -B +B
Fan vents
A power return
B power -48VDC
B power return
1X
A power -48VDC
Power
Col/FDX
Link/Act
100M
Col/FDX
Link/Act
100M
sen 10 ssf switch 24 prt
Front View detail

Server Frame, Console Server

Figure 2-40. Console Server

Figure 2-41. Sentinel Server Frame Console Server

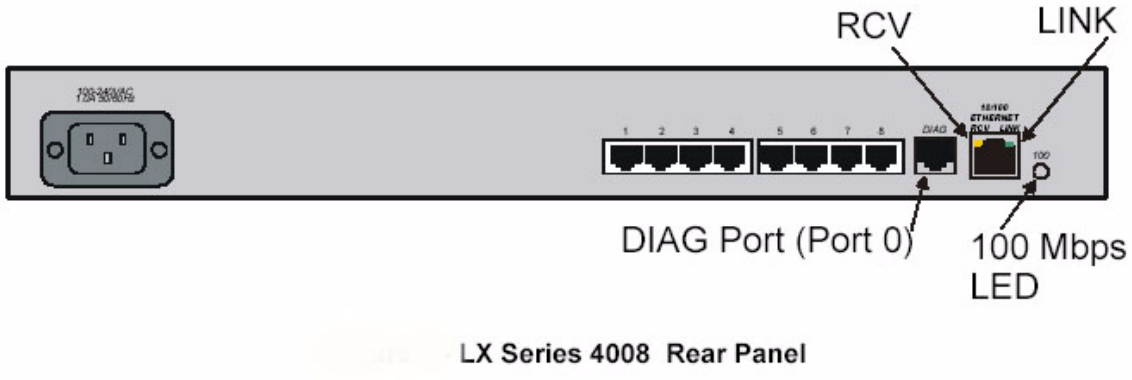

MRV™ Model LX Series 4008M with modem rear panel (console server P/N 870-2742-01) hardware in the Sentinel server frames that support Sentinel products.

Figure 2-42. Server Frame Console Server

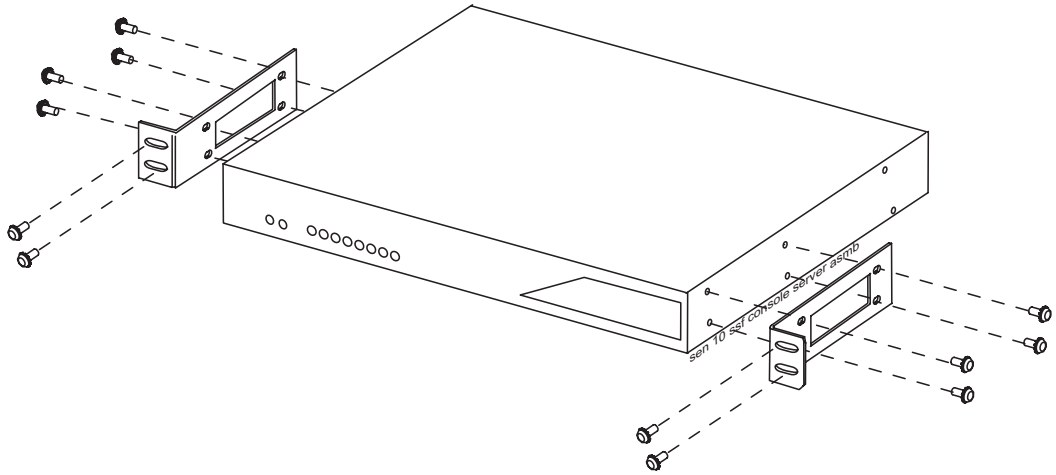

Procedure — Mounting the Console Server

The three bottom screws hold the cover on the server.

1. To front-mount the server:
   Remove the front and center-top and bottom screws before attaching the rack mounted brackets.
   Insert the supplied screws through the brackets and into the same holes.

Figure 2-43. Sentinel Server Frame Console Server

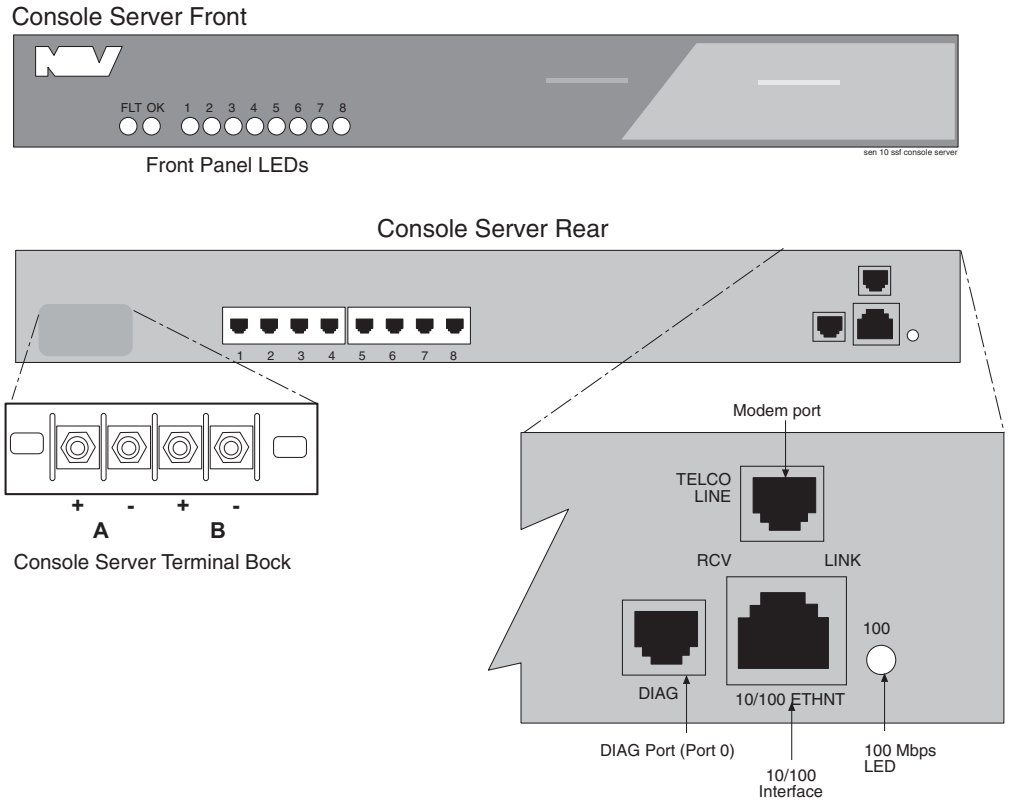

Table 2-15. Console Server, LEDs

LEDs Front	Description Front
FLT	Red indicates a fault condition exist or maintenance is required. This LED remains on until the initial Power On Shelf Test (POST) is completed successfully.
OK	Green indicates the system's voltage is normal and the server has passed POST test.
Port Status LEDs	All eight LEDs flash GREEN when receive, transmit, or status activity is detected on the corresponding serial port. The port status LEDs are used in several ways. During the initialization process, the LEDs indicate self-test plans are being performed, and if self-test fails, they indicate an error code. After the POST test and a system software boot, the LEDs indicate when a ports is actively being used.
LED Rear	**Description Rear**
100	Indicates 100 Mbps LED active.

Server Frame, Interconnect

Figure 2-44. Server Frame, BP

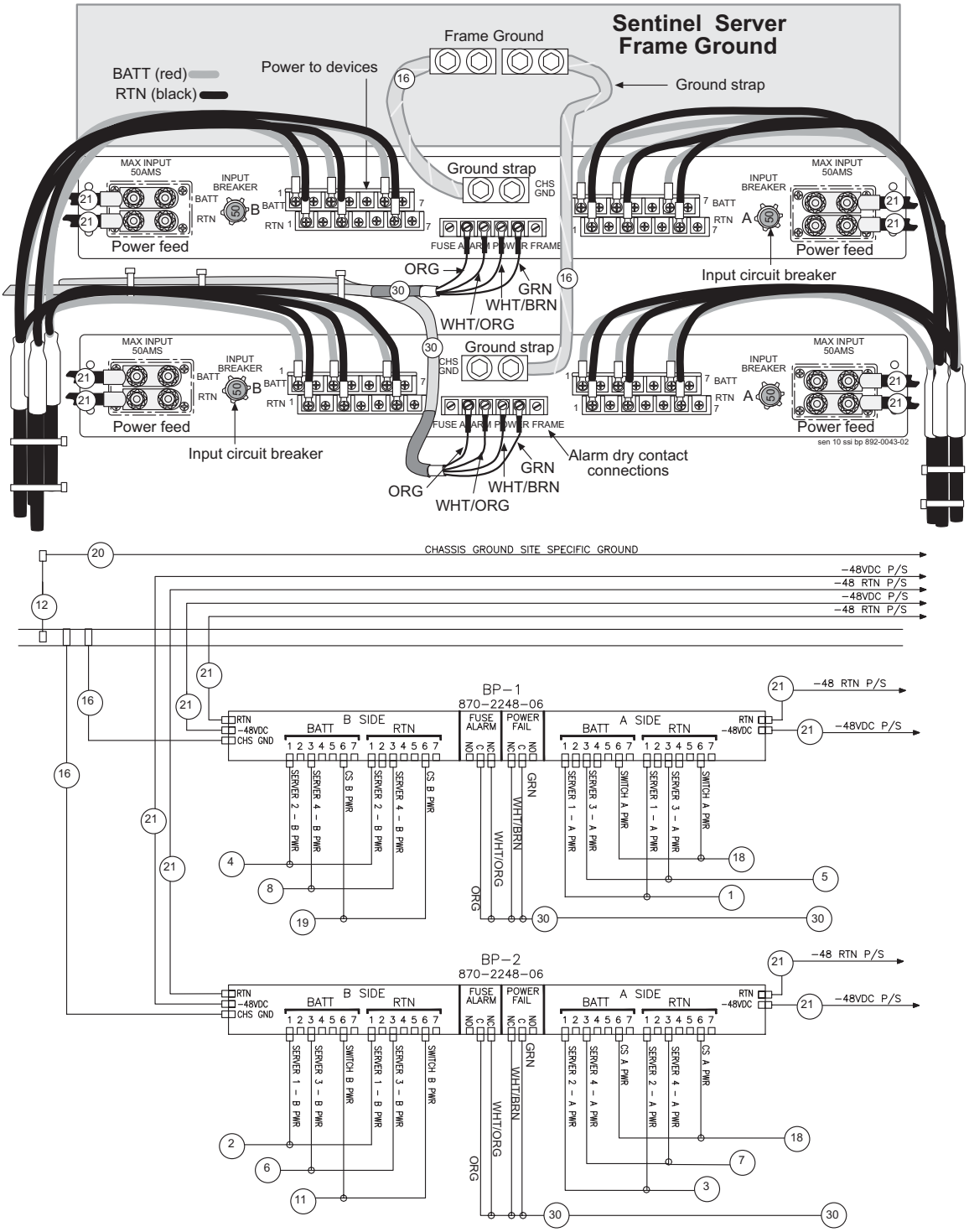

Figure 2-45. Server Frame, Interconnect

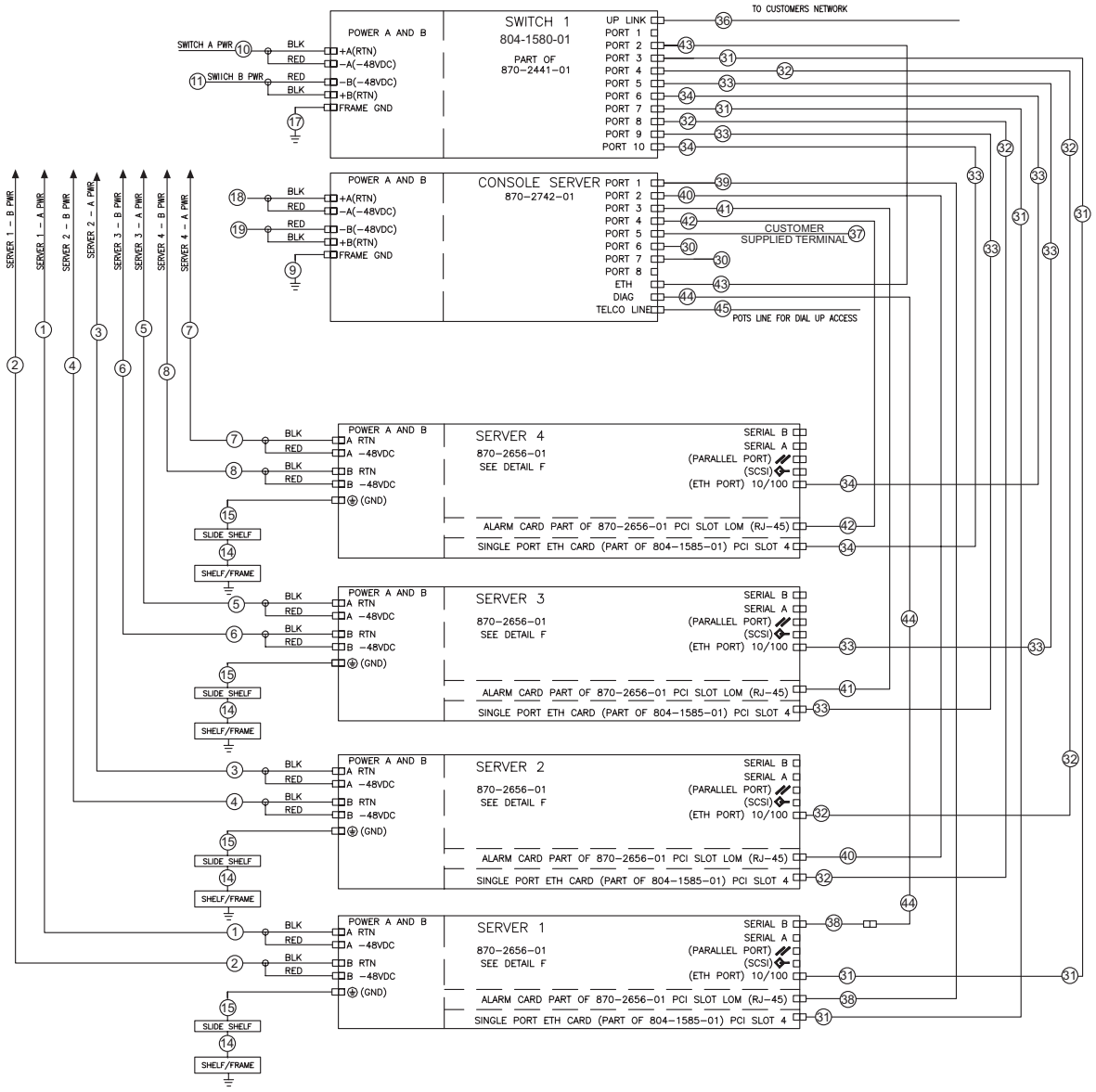

Table 2-16. Server Frame, Legends A and B

TABLE A – POWER/GROUND CABLE PART NUMBERS

ITEM NO.	TEKELEC P/N	QUANTITY	LENGTH	COMMENT
1	830–0931–01	1	103.00 INCHES	BP–1 POS 1A TO SERVER 1–A POWER
2	830–0931–02	1	106.00 INCHES	BP–2 POS 1B TO SERVER 1–B POWER
3	830–0931–03	1	84.00 INCHES	BP–2 POS 1A TO SERVER 2–A POWER
4	830–0931–04	1	93.00 INCHES	BP–1 POS 1B TO SERVER 2–B POWER
5	830–0931–05	1	72.00 INCHES	BP–1 POS 3A TO SERVER 3–A POWER
6	830–0931–06	1	75.00 INCHES	BP–2 POS 3B TO SERVER 3–B POWER
7	830–0931–07	1	50.00 INCHES	BP–2 POS 3A TO SERVER 4–A POWER
8	830–0931–08	1	60.00 INCHES	BP–1 POS 3B TO SERVER 4–B POWER
9	830-1003-01		24.00 INCHES	CHASSIS GROUND SWITCH
10	830–0868–25	1	42.00 INCHES	BP–1 POS 6A TO SWITCH–A POWER
11	830–0868–26	1	33.00 INCHES	BP–2 POS 6B TO SWITCH–B POWER
12	830–0715–01	1	36.00 INCHES	CHASSIS GROUND TO GROUND WINDOW
13	NOT USED			
14	830–0820–01	4	23.50 INCHES	GROUND, SLIDE SHELF TO FRAME
15	830–0907–03	4	16.00 INCHES	GROUND, NETRA 20 TO SLIDE SHELF
16	830–0830–01	2	N/A	GROUND, BP 1 AND 2 TO FRAME GROUND
17	830–0822–02	1	14.38 INCHES	GROUND, SWITCH FRAME GROUND
18	830–0868–27	1	41.00 INCHES	BP–2 POS 6A TO CONSOLE SERVER–A POWER
19	830–0868–28	1	38.00 INCHES	BP–1 POS 6B TO CONSOLE SERVER–B POWER
20	CHASSIS GND (FIELD ROUTED)	1	SITE SPECIFIC	SEE TABLE D
21	–48VDC AND 48V RTN (FIELD ROUTED)	8	SITE SPECIFIC	SEE TABLE C
22–29	NOT USED			

TABLE B – DATA CABLE PART NUMBERS

ITEM NO.	TEKELEC P/N	QUANTITY	LENGTH	COMMENT
30	830–1000–01	2	46.00 INCHES	BREAKER ALARM RING TERMINALS TO RJ45 FROM: BP 1 ALARM TO: CONSOLE SERVER PORT 6 FROM: BP 2 ALARM TO: CONSOLE SERVER PORT 7
31	830–0724–02	2	120.00 INCHES	STRAIGHT THRU RJ45 TO RJ45 FROM: SERVER 1 10/100 PORT TO: SWITCH PORT 3 FROM: SERVER 1 EHT PCI CARD TO: SWITCH PORT 7
32	830–0724–67	2	96.00 INCHES	STRAIGHT THRU RJ45 TO RJ45 FROM: SERVER 2 10/100 PORT TO: SWITCH PORT 4 FROM: SERVER 2 EHT PCI CARD TO: SWITCH PORT 8
33	830–0724–07	2	84.00 INCHES	STRAIGHT THRU RJ45 TO RJ45 FROM: SERVER 3 10/100 PORT TO: SWITCH PORT 5 FROM: SERVER 3 EHT PCI CARD TO: SWITCH PORT 9
34	830–0724–07	2	84.00 INCHES	STRAIGHT THRU RJ45 TO RJ45 FROM: SERVER 4 10/100 PORT TO: SWITCH PORT 6 FROM: SERVER 4 EHT PCI CARD TO: SWITCH PORT 10
35	NOT USED			
36	830–0724–XX	1	SITE SPECIFIC	TO CUSTOMER NETWORK – RJ45 STRAIGHT THRU
37	830–0724–XX	A/R	SITE SPECIFIC	TO CUSTOMER SUPPLIED TERMINAL
38	830–1001–01	1	NA	ADAPTER–CONSOLE SERVER TO NETRA
39	830–0990–09	1	108.00	CONSOLE CABLE RJ45 TO RJ45 FROM SERVER 1 LOM PORT TO: CONSOLE SERVER PORT 1
40	830–0990–08	1	108.00	CONSOLE CABLE RJ45 TO RJ45 FROM SERVER 2 LOM PORT TO: CONSOLE SERVER PORT 2
41	830–0990–07	1	108.00	CONSOLE CABLE RJ45 TO RJ45 FROM SERVER 3 LOM PORT TO: CONSOLE SERVER PORT 3
42	830–0990–06	1	108.00	CONSOLE CABLE RJ45 TO RJ45 FROM SERVER 4 LOM PORT TO: CONSOLE SERVER PORT 4
43	870-0724-66	–	–	
44	830–0990–10	1	108.00	CONSOLE CABLE RJ45 TO RJ45 FROM: SERVER 1 SERIAL PORT TO: CONSOLE SERVER DIAG PORT
45	SITE SPECIFIC	1	SITE SPECIFIC	POTS LINE FOR DIAL IN ACCESS
46	NOT USED			
47	NOT USED			
48	NOT USED			
49	NOT USED			
50	NOT USED			

sen 10 892-0043-02_tables a-b

Packet Backplane Chassis

This section provides instructions for handling the Packet Based Chassis (PBC). For infomation on how to prepare floors and install Tekelec heavy-duty frames for both Netra-based servers and Tekelec 1000-based servers, see the *TekServer Platform Services Hardware Manual*.

The Packet Backplane Chassis consists of the following standard features:

- Steel Packet Backplane Chassis (PBC) with high frequency shielding for protection against radiation and interference.
- 12U (21 inches) height chassis with 23-inch rack mount options.
- 21-slot Compact Peripheral Component Interconnect (cPCI) backplane.
- Two 2.16 compliant redundant CPSB Switch Module (CSM) cards.
- 17 PCI Industrial Computer Manufactures Group (PICMG) 2.16 compliant node slots.
- Replaceable chassis front Air Filter (P/N 804-1671-02).
- Two hot-swappable, high performance fan trays with four fans mounted in each Fan Tray (P/N 870-2594-01).
- Three 500w hot-swappable, N+1 redundant Power Supplies (P/N 870-2595-01).
- Dual wide-ranging DC inputs.
- Power circuit breakers accessible on the back panel.
- Front access service and installation of cards, fans, and Power Supplies.
- Access to rear transition cards.

Taking ESD and Antistatic Precautions

When handling circuit cards and associated internal computer components, use an antistatic wrist strap.

CAUTION: Circuit cards and associated system components are sensitive to Electro Static Discharge (ESD) and can be damaged by ESD. To avoid damaging cards or components, take appropriate precautions when handling them.

- Plug in the anti-static grounding wire from the wrist strap to the grounding plug on the service panel or to the grounding plug on the DC power input panel on the rear.
- Plug in the card and lock the handles on the card firmly onto the front panel.
- Tighten the retaining screws in the handles.
- Provide adequate space around the fans and all air inlets and outlets for successful airflow. Insufficient cooling may cause the operating system software to fail with resultant serious hardware damage.
- Use shielded Ethernet cables.

CAUTION: To avoid damage to the cards or Field Replaceable Units (FRUs) installed before the delivery of the system, Do Not reseat FRUs or cards in this system. Install cards only in the designated slots.

PBC Handling the Chassis

Due to the weight of the fully loaded chassis at least two technicians are required for transport and installation of this shelf.

Procedure — Unpacking the PBC

1. Make sure the packing carton is upright. (Shelves may be shipped in a wooden crate).
2. Carefully cut the sealing tape with a box cutter and open the box.
3. Remove the cardboard packing and any other packing material carefully from the box.
4. Lift up the chassis carefully out of the carton.
5. Visually inspect the product for any physical damage.
6. Report any product damage immediately to Tekelec.
7. Do not block any area with used packing material.
8. Move the chassis to the location designated for installation.
9. Properly dispose of any used packing material that is not to be returned to Tekelec.

A

LEDs

Circuit Card LEDs A–2
Introduction A–2
ATM-LIM, AINF-LIM, E1-LIM, EILA, ILA A–3
DCM and DSM, Database Module A–4
General Purpose Service Module (GPSM-II) A–6
GR-376 Processor A–7
HMUX, High-Speed Multiplexer (Eagle STP only) A–8
MCAP, MAS Communications Applications Processor A–9
MDAL, Maintenance Disk and Alarm Card A–10
MPL-LIM, Multi-Port LIM A–11
Breaker Panel LEDs A–14
Host Server LEDs A–15
Hub LEDs A–16
Router LEDs A–17
Expanded (ESP) Ethernet Switches A–18
Expanded (ESP) Ethernet Switches A–18
TAS, Tone and Announcement Server LEDs A–20

Circuit Card LEDs

Introduction

This appendix contains Light Emitting Diode (LED) information for all circuit cards and OEMs in this system. This appendix is designed to assist maintenance personnel in troubleshooting.

WARNING: Use the antistatic wrist strap connected to the wrist strap grounding point when handling any card components.

The Systems are configured with card modules that provide specific functions and services. Cards are connected to the shelf backplane through connectors located on the rear of the card. Cam-out/lock-in levers, mounted on the front edge of the card, assist in insertion and removal of the card. Part numbers, LEDs, Text and Bar codes are also located on the front of the cards.

To remove a card use both hands to toggle the levers out from the face of the card. To insert a card, align the card in the slot, push slowly in until the connectors engage and press both levers in until they lock the card in place. To ensure proper seating, the toggle levers must be held in the release position until the locking tabs can engage the upper and lower flange on the shelf. Once the locking tabs on the levers engage the shelf plane, the levers are pressed in toward the card faceplate, and must be flush with the faceplate when the card is completely seated.

ATM E1/T1 Card P/N 870-2698-01

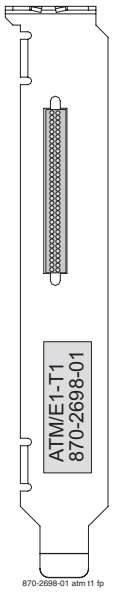

ATM-LIM, AINF-LIM, E1-LIM, EILA, ILA

ATM-LIM (P/N 870-1293-xx)
AINF-LIM (P/N 870-1488-xx, (*Replaced by the Integrated LIM Applique, ILA and EILA)*
E1-LIM (P/N 870-1379-01)
EILA (P/N 870-2049-xx)
ILA (P/N 870-1484-xx)
LIM(P/N 870-1014-xx)

Figure A-1. LIM LEDs

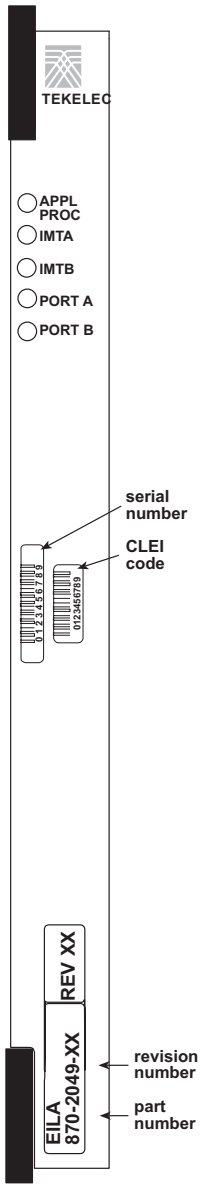

LEDs	Descriptions
APPL PROC	RED – Application processor is not running or is failing diagnostics. AMBER – LIM is loading an application or is being polled (may be prevented from loading by maintenance out of service condition). GREEN – LIM is running an application. RED/GREEN – Operational, no communication with MASP
IMTA	RED – LIM is off IMT bus A. AMBER – LIM is on IMT bus A, but testing is not complete. GREEN – LIM is on IMT bus A. BLANK – Communication processor is not operating.
IMTB	RED – LIM is off IMT bus B. AMBER – LIM is on IMT bus B, but testing is not complete. GREEN – LIM is on IMT bus B. BLANK – Communication processor is not operating.
PORT A	RED – Link is out of service. AMBER – Link is attempting to align GREEN – Link is aligned and in service.
PORT B	RED – Link is out of service. AMBER – Link is attempting to align GREEN – Link is aligned and in service.

DCM and DSM, Database Module

DCM Database Communications Module part numbers are:
P/N 870-1671-04 K6 DCM the original card
P/N 870-1945-03 K6-lll DCM required for 200 TPS
P/N 870-1984-01 DCMX (K6-lll equivalent) (primary board).
DSM Database Services Module (primary board plus memory boards) part numbers are:
P/N 870-1984-02 DSM-1G
P/N 870-1984-03 DSM-2G
P/N 870-1984-04 DSM-3G
P/N 870-1984-05 DSM-4G

Figure A-2. DCM LEDs

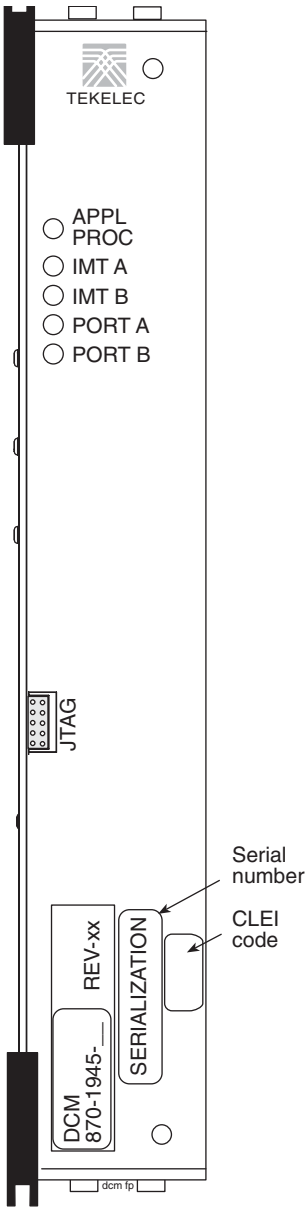

LEDs	Descriptions
APPL PROC	RED – Critical alarm condition detected. GREEN – No alarm
IMT A	RED – Major alarm condition detected. GREEN – No alarm
IMT B	AMBER – Minor alarm condition detected. GREEN – No alarm
PORT A	GREEN – PORT A is the active PORT. RED – PORT A is inactive
PORT B	GREEN – PORT B is the active PORT. RED – PORT B is inactive.

E1/T1 MIM,

European and North American standard for signaling and channels
MIM (Multi-channel Interface Module)

Figure A-3. E1/T1 MIM (P/N 870-2198-01)

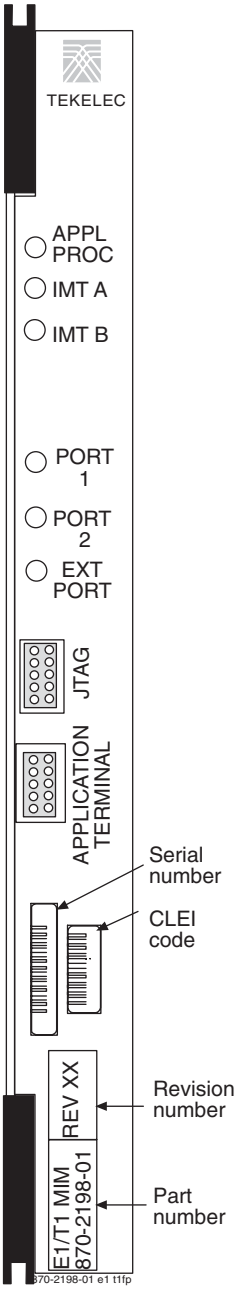

LEDs	Descriptions
APPL PROC	RED – Critical alarm condition detected GREEN – No alarm
IMT A	RED – Major alarm condition detected GREEN – No alarm
IMT B	AMBER – Minor alarm condition detected GREEN – No alarm
PORT 1	AMBER – Card is an E1-T1 Channel Card GREEN – All channels provisioned =ISNR AMBER BLINKING – Any channels provisioned = OOS RED BLINKING – All channels provisioned = OOS RED – No channels are provisioned
PORT 2	AMBER – Card is an E1-T1 Channel Card GREEN – All channels provisioned =ISNR AMBER BLINKING – Any channels provisioned = OOS RED BLINKING – All channels provisioned = OOS RED – No channels are provisioned
EXT PORT	AMBER – Card is an E1-T1 Master Card GREEN – All channels provisioned =ISNR AMBER BLINKING – Any channels provisioned = OOS RED BLINKING – All channels provisioned = OOS RED – No channels are provisioned
OOS	Out of service

General Purpose Service Module (GPSM-II)

GPSM-II (P/N 870-2360-01 cards with Upgraded Daughter boards 1 Gigabyte (UD1G)(P/N 850-0527-02/03)

Figure A-4. GPSM-II P/N 870-2360-01

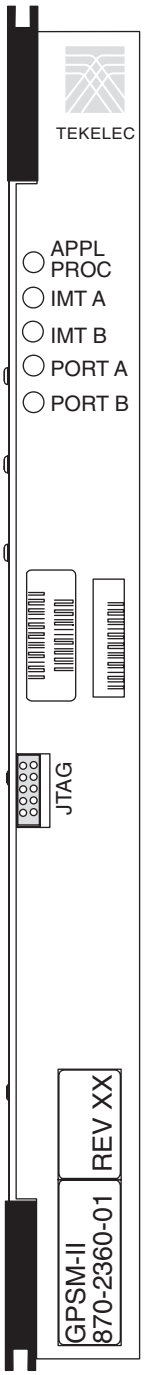

LEDs	Descriptions
APPL PROC	RED – Critical alarm condition detected. GREEN – No alarm
IMT A	RED – Major alarm condition detected. AMBER – Minor alarm condition detected. GREEN – No alarm
IMT B	RED – Major alarm condition detected. AMBER – Minor alarm condition detected. GREEN – No alarm
PORT A	GREEN – PORT A is the active PORT. RED – PORT A is inactive
PORT B	GREEN – PORT B is the active PORT. RED – PORT B is inactive.

Figure A-5. GR-376 LEDs

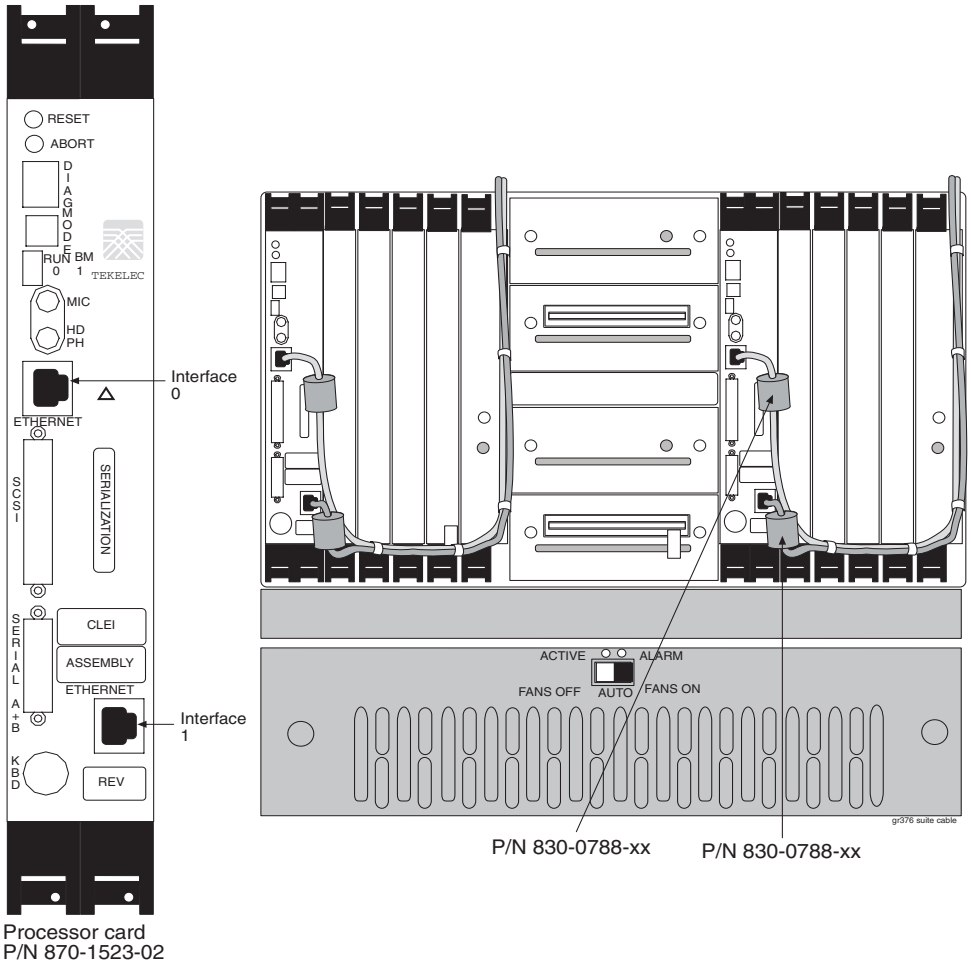

HMUX, High-Speed Multiplexer (Eagle STP only)

HMUX (P/N 870-1965-04)

Figure A-6. HMUX LEDs

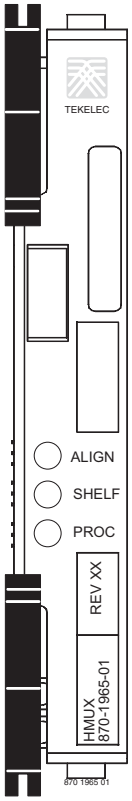

LEDs	Descriptions
ALIGN	AMBER – Programming XILINX complete GREEN – Complete code initialization (stays Amber until the first valid Shelf ID is received from MASP), Code running
SHELF ID	AMBER – Programming XILINX complete, Complete code initialization RED – While code running if ID address received from OAM **does not** match the on-board stored address read from the assigned shelf address register (see first note below) GREEN – While code running if ID address received from OAM matches the on-board stored address read from the assigned shelf address register (see second note below)
PROC Health	RED – Power on Reset AMBER – Programming XILINX GREEN – Programming XILINX complete, Complete code initialization, Code running

NOTE: The LED color state change during power up and reset happens within one second. To determine operating status, wait until reset is over.

NOTE: At start up, each HMUX card receives an ID address from the OAM. The HMUX card stores this address in on-board memory, in register FF. Every five seconds, the OAM re-sends the same addresses to the HMUX cards, which compare the re-send with the address they previously received and stored in memory. If the address sent to an HMUX card by OAM does not match the stored address, the HMUX Illegal Address Error alarm will cause the Shelf LED color to change to RED.

MCAP, MAS Communications Applications Processor

MCAP (P/N 870-1013-xx) or MCAP-256 (P/N 870-1307-xx)

Figure A-7. MCAP LEDs

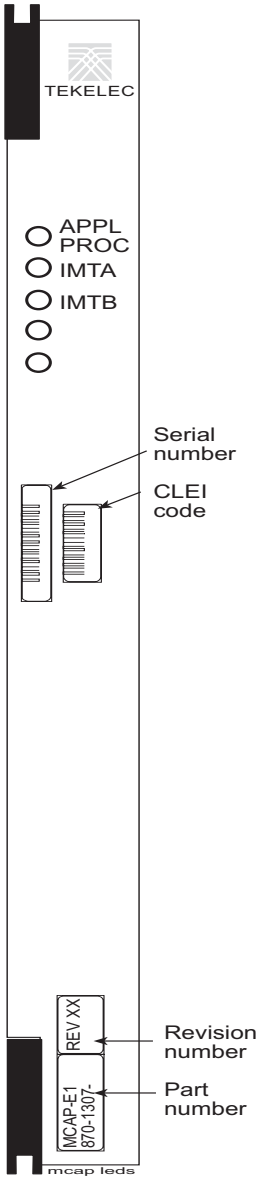

LEDs	Descriptions
APPL PROC – Applications Processor Status	RED – Application processor is not running, is failing diagnostics, or is starting up after insertion. AMBER – Application is loading. GREEN – Application is running.
IMTA – IMT Bus A Status	RED – MCAP is off IMT bus A. AMBER – MCAP is on IMT bus A, but testing is not complete. GREEN – MCAP is on IMT bus A. BLANK – Communication processor is not operating.
IMTB – IMT Bus B Status	RED – MCAP is off IMT bus B. AMBER – MCAP is on IMT bus B, but testing is not complete. GREEN – MCAP is on IMT bus B. BLANK – Communication processor is not operating.

MDAL, Maintenance Disk and Alarm Card

MDAL (P/N 870-0773-XX)

Figure A-8. MDAL LEDs

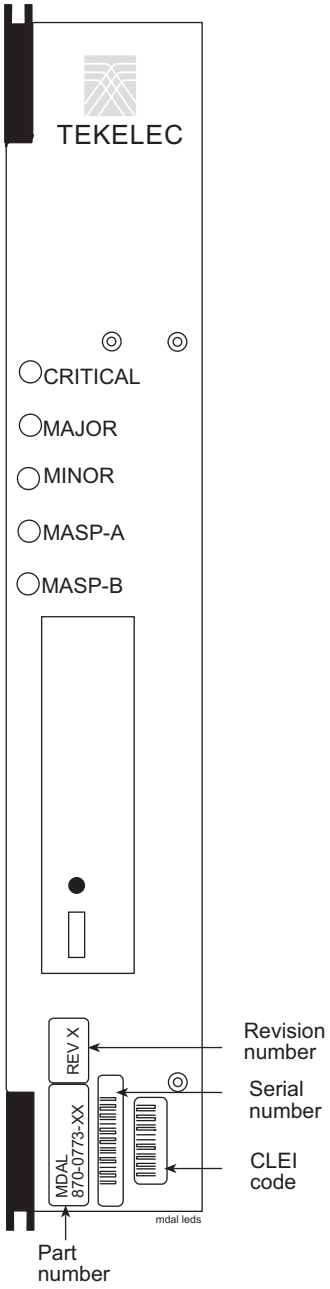

LEDs	Descriptions
CRITICAL	RED – Critical alarm condition detected GREEN – No alarm
MAJOR	RED – Major alarm condition detected GREEN – No alarm
MINOR	AMBER – Minor alarm condition detected GREEN – No alarm
MASP-A	GREEN – MASP-A is the active MASP OFF – MASP-A is the standby MASP or is not present
MASP-B	GREEN – MASP-B is the active MASP OFF – MASP-B is the standby MASP or is not present

Figure A-9. MPL (P/N 870-2061-xx) LEDs

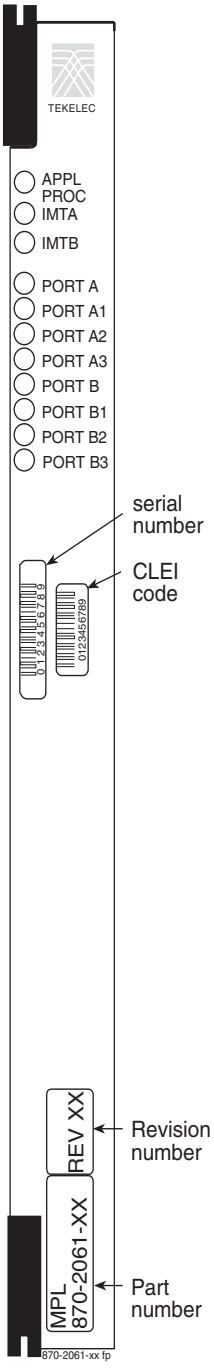

LEDs	Descriptions
APPL PROC	RED – Application processor is not running or is failing diagnostics. AMBER – MPL is loading an application or is being polled (may be prevented from loading by maintenance out of service condition). GREEN – MPL is running an application. RED/GREEN (Alternating) Operational but no communication with MASP
IMTA	RED – MPL is off IMT bus A. AMBER – MPL is on IMT bus A, but testing is not complete. GREEN – MPL is on IMT bus A. BLANK – Communication processor is not operating.
IMTB	RED – MPL is off IMT bus B. AMBER – MPL is on IMT bus B, but testing is not complete. GREEN – MPL is on IMT bus B. BLANK – Communication processor is not operating.
PORT A	RED – Link is out of service. AMBER – Link attached to Port is attempting to align GREEN – Link is aligned and in service. RED/GREEN (alternating) – Link attached to Port is in a loop-back condition.
PORT A1	RED – Link is out of service. AMBER – Link attached to Port is attempting to align GREEN – Link is aligned and in service. RED/GREEN (alternating) – Link attached to Port is in a loop-back condition.
PORT A2	RED – Link is out of service. AMBER – Link attached to Port is attempting to align GREEN – Link is aligned and in service. RED/GREEN (alternating) – Link attached to Port is in a loop-back condition.
PORT A3	RED – Link is out of service. AMBER – Link attached to Port is attempting to align GREEN – Link is aligned and in service. RED/GREEN (alternating) – Link attached to Port is in a loop-back condition.
PORT B	RED – Link is out of service. AMBER – Link attached to Port is attempting to align GREEN – Link is aligned and in service. RED/GREEN (alternating) – Link attached to Port is in a loop-back condition.
PORT B1	RED – Link is out of service. AMBER – Link attached to Port is attempting to align GREEN – Link is aligned and in service. RED/GREEN (alternating) – Link attached to Port is in a loop-back condition.
PORT B2	RED – Link is out of service. AMBER – Link attached to Port is attempting to align GREEN – Link is aligned and in service. RED/GREEN (alternating) – Link attached to Port is in a loop-back condition.
PORT B3	RED – Link is out of service. AMBER – Link attached to Port is attempting to align GREEN – Link is aligned and in service. RED/GREEN (alternating) – Link attached to Port is in a loop-back condition.

MPLT, Multi-Port LIM with Taxi Component

MPLT (P/N 870-2062-02)

Figure A-10. MPLT LEDs

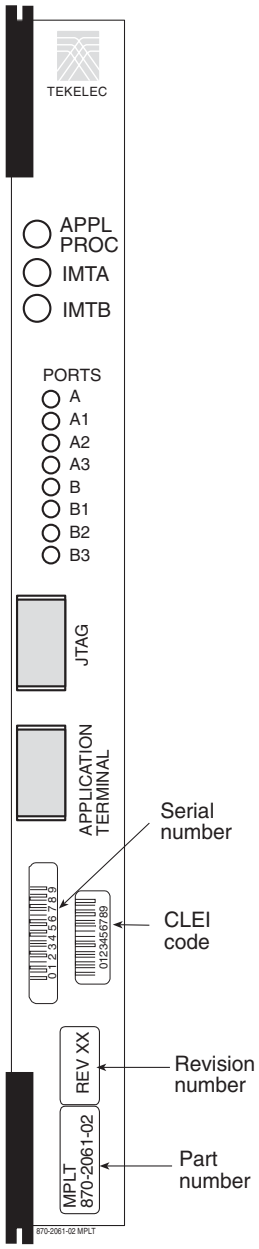

LEDs	Descriptions
APPL PROC	RED – Application processor is not running or is failing diagnostics. AMBER – MPL is loading an application or is being polled (may be prevented from loading by maintenance out of service condition). GREEN – MPL is running an application.
IMTA	RED – MPL is off IMT bus A. AMBER – MPL is on IMT bus A, but testing is not complete. GREEN – MPL is on IMT bus A. BLANK – Communication processor is not operating.
IMTB	RED – MPL is off IMT bus B. AMBER – MPL is on IMT bus B, but testing is not complete. GREEN – MPL is on IMT bus B. BLANK – Communication processor is not operating.
PORT A	RED – Link is out of service. GREEN – Link is aligned and in service.
PORT A1	RED – Link is out of service. GREEN – Link is aligned and in service.
PORT A2	RED – Link is out of service. GREEN – Link is aligned and in service.
PORT A3	RED – Link is out of service. GREEN – Link is aligned and in service.
PORT B	RED – Link is out of service. GREEN – Link is aligned and in service.
PORT B1	RED – Link is out of service. GREEN – Link is aligned and in service.
PORT B2	RED – Link is out of service. GREEN – Link is aligned and in service.
PORT B3	RED – Link is out of service. GREEN – Link is aligned and in service.

Integrated Applications LEDs

Visual alarms and operational status are indicated on the front of all components with Light Emitting Diodes (LEDs). This chapter describes these LEDs.

Field Replaceable Unit (FRU) component failures can be diagnosed using the LEDs with the referenced tables in this chapter. For replacement procedures, refer to the *Maintenance Manual* included in your current Documentation Suite.

Alarms for vendor-supplied equipment are referenced in associated documentation supplied with your system. For server conditions that are tested and abnormalities reported, alarm information is logged in the server and sent to an attached workstation.

A workstation connected to the system must be running the Network Event Monitoring System (NEMS) application for alarm notification. To display system information at the workstation, the System Status Display (SSD) application must be selected from the application menu. For additional information about the NEMS, SSD, and other system administration applications, refer to your system's user guide.

Breaker Panel LEDs

The visual alarm indicators are on the front of the breaker panel. Refer to Figure A-11 for breaker panel LED locations. Table A-1 describes the breaker panel alarm LED indications.

Figure A-11. Breaker Panel LEDs

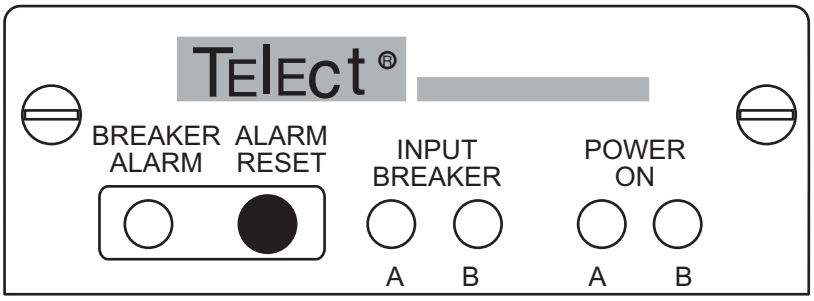

FRONT VIEW

Table A-1. Beaker Panel LED Description

LED	Color	Description
Power On A	Green	Lights whenever Side A is receiving input power (LED will remain lit even if the input breaker has tripped)
Power On B	Green	Lights whenever Side B is receiving input power (LED will remain lit even if the input breaker has tripped)
Breaker Alarm	Red	Lights whenever an output circuit breaker has tripped or turned off
Input Breaker A/B	Green	Lights whenever Side A/B is receiving input power (Not lit if input breaker is tripped)

Host Server LEDs

The LEDs on the front and rear of the host server indicate the current status of the system. Refer to Figure A-12 for a view of the front LEDs. Table A-2 describes the LED indicators on the front and rear of the server.

Figure A-12. Host Server LEDs

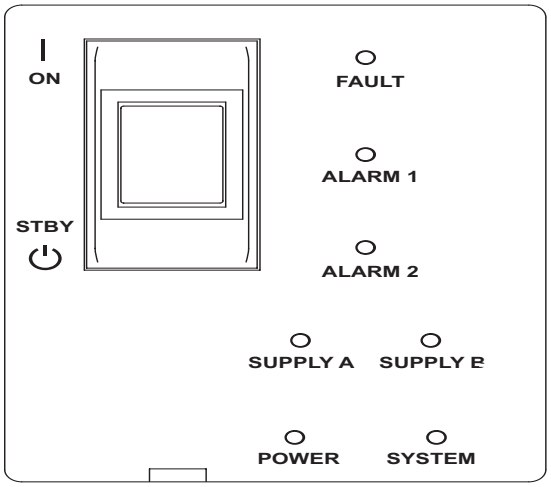

Table A-2. Host Server LED Descriptions

LED	Color	Description
FAULT	Amber	Flashes when a fan or Power Supply Unit (PSU) has failed Lights continuously when manually switched on
ALARM 1	Amber	Illuminated when the VX*i* MGC server critical alarms are present
ALARM 2	Amber	Illuminated when the VX*i* MGC server major alarms are present
SUPPLY A	Green	Lights whenever DC input A is present on all fitted PSUs
SUPPLY B	Green	Lights whenever DC input B is present on all fitted PSUs
POWER	Green	Lights at all times when the system is on
SYSTEM	Green	Off (or reset) during power up procedures Lights when UNIX is running and the alarms driver is installed **NOTE: This LED is reset by a hardware watchdog time-out or whenever user-defined Alarm 3 is asserted**
LINK	Green	Located on Quad Fast Ethernet card in slot 1 at the rear of the server. LED indicators from top to bottom correspond to QFE0 to QFE3. Lights when links are connected.

Hub LEDs

Figures A-13 shows the front view of the hub indicating L.ED locations. Table A-3 describes the LEDs on the front of the hub.

Figure A-13. Hub Front View

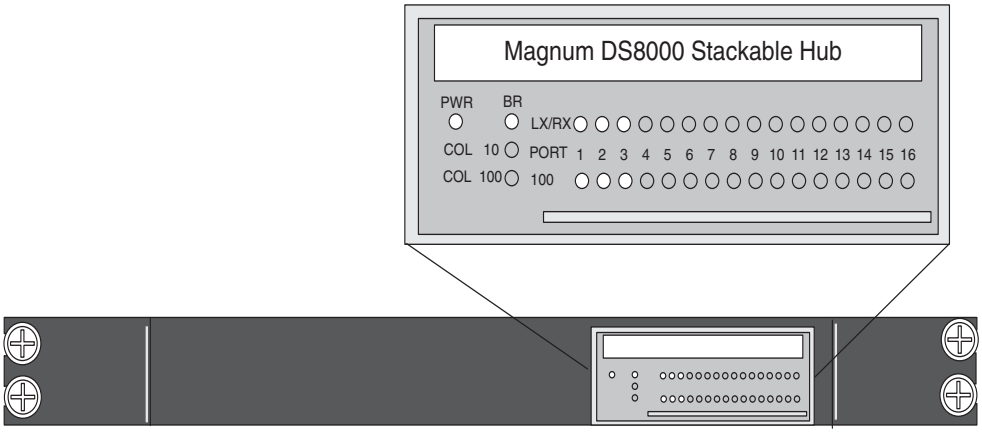

Table A-3. Hub Front LEDs

LED	Color	Description
PWR	Green	Lights when -48VDC power is applied
COL 10	Red	Blinks intermittently when a collision occurs in the 10 Mb domain
COL 100	Red	Blinks intermittently when a collision occurs in the 100 Mb domain
BR	Green	Lights when the 10/100 Mb bridge module is installed
100 (Per Port)	Green	• Lights when port speed is 100 Mb • Unlit when speed is 10 Mb • Blinks when link is not connected or when auto-negotiating
LK/RX (Per Port)	Green	• Lights steadily when port is operational • Blinks when port is receiving data or is not connected

Router LEDs

Three routers are configured by Tekelec for NEBS compliancy. Two are configured as isolation routers and one is configured as a dial-in router. Figure A-14 shows the positions of LED indicators on the front of the routers and Table A-4 describes the front LED functions.

Figure A-14. Front View Routers

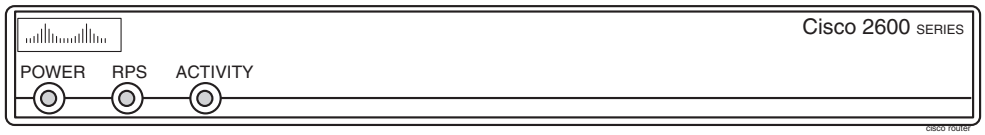

Table A-4. Routers - Front LEDs

LED	Description
PWR	Indicates when power is present to the router.
RPS	Off when the redundant power supply is not present. On redundant power supply is present and functional.
Activity	Off-No network activity Blink-(500 ms ON and 500ms OFF) in ROMMON no errors detected. Blink-(500 ms ON and 500ms OFF two seconds between codes) in ROMMON and error detected

Figures A-15 and A-16 show the rear views of the Isolation and Dial-In routers. Link (LNK) and activity (ACT) LEDs are located near each ethernet port at the rear of the routers. Table A-5 describes the rear LED indicators.

Figure A-15. Rear View Isolation Router

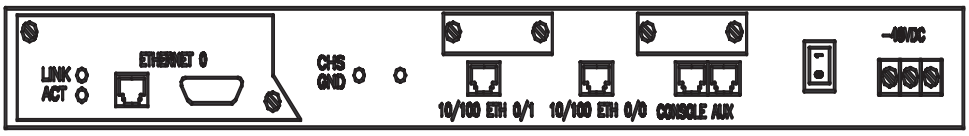

Figure A-16. Rear View Dial-in Router

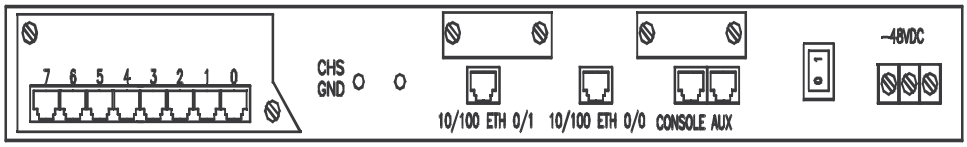

Table A-5. Routers - Rear LEDs

LED	Description
LNK	Indicates link is established to far end connection
ACT	Blink-indicates data activity on the link

Expanded (ESP) Ethernet Switches

The ESP interconnects all components on the ESP internal LANs using WS-C2924-XL-EN Ethernet switches. Figure A-17 illustrates the front and rear of the Ethernet switch.

Figure A-17. Ethernet Switch

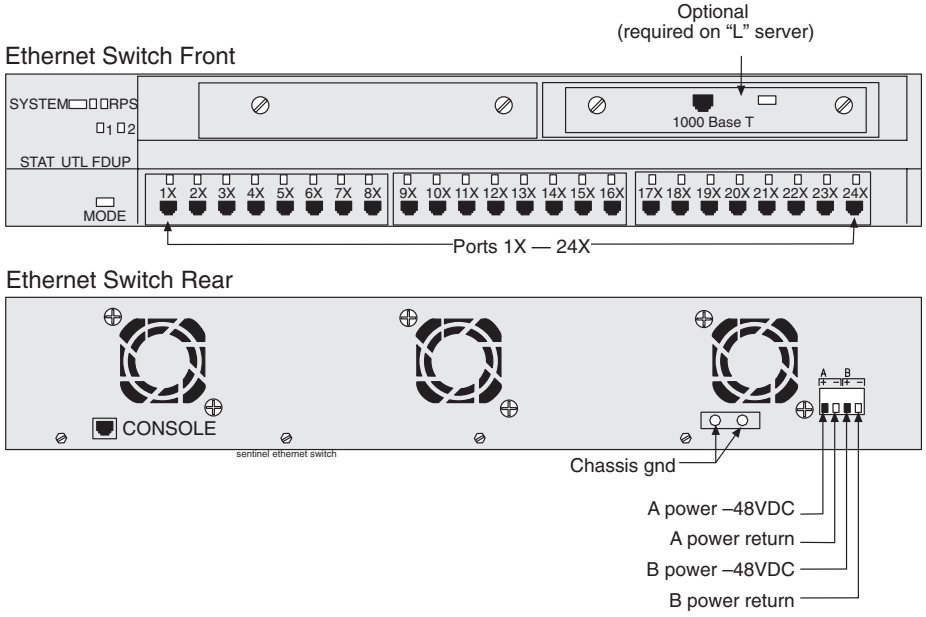

Table A-6 describes the LEDs located on the front of the switches.

Table A-6. Ethernet Server LEDs

LED	Description
System	Green-Indicates when power is present to the switch and the power switch is in the ON position. Amber-Indicates power is present but system is not functioning properly
1 and 2	Indicates expansion boards WS-X2932-XL are installed and functioning LED 1 (Left board) LED 2 (Right board)
RPS (Always OFF)	Off when the redundant power supply is not present. On redundant power supply is present and functional.
Pressing the MODE switch on the front of the WS-C2924-XL-EN changes the per-port LED indications to the following.	

Table A-6. Ethernet Server LEDs (Continued)

LED	Description
STAT (port status) Default	Off-No link. Solid green-Link present. Flashing green-Activity. Port is transmitting or receiving data. Alternating green/amber-Link fault. Error frames can affect connectivity, and errors such as excessive collisions, CRC errors, and alignment and jabber errors are monitored for a link-fault indication. Solid amber-Port is not forwarding. Port was disabled by management or an address violation or was blocked by Spanning Tree Protocol (STP). **NOTE: Note After a port is reconfigured, the port LED can remain amber for up to 30 seconds as STP checks the switch for possible loops.**
UTL (utilization)	Green-The LEDs display backplane utilization on a logarithmic scuffle all port LEDs are green, the switch is using 50 percent or more of its total bandwidth capacity. If the right-most LED is amber, the switch is using less than 50 percent of its total bandwidth. If the LED to the left of the right-most LED is amber, the switch is using less than 25 percent of its total capacity, and so on.
FDUP (port full-duplex)	Off-Port is operating in half duplex. Green-Port is operating in full duplex.
100 (port speed)	Off-Port is operating at 10 Mbps. Green-Port is operating at 100 Mbps.

TAS, Tone and Announcement Server LEDs

Figure A-18 shows the front view of the TAS indicating LED locations. Table A-7. describes the LEDs.

For information on TAS alarms, refer to the *Cognitronics Exchange (CX) Series CX3000 Hardware Manual*.

Figure A-18. TAS - Front View

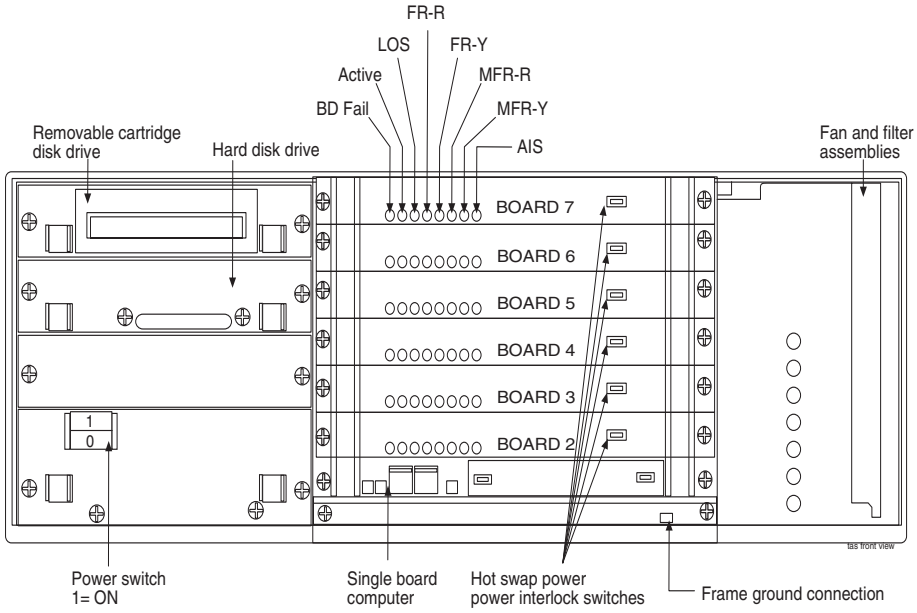

Table A-7. TAS LEDs

Location	LED Name	Color	Description
Front Panel	Maj	Red	Major alarm
Front Panel	Min 1	Yellow	Minor alarm level one
Front Panel	Min 2	Yellow	Minor alarm level two
Front Panel	Min 3	Yellow	Minor alarm level three
Front Panel	Standby	Yellow	Power applied unit in standby mode
Front Panel	Alive	Green	Blinks five seconds on and five seconds off when operating
Front Panel	Power	Green	Indicates when power is present to the router and the power switch is in the ON position.

Table A-7. TAS LEDs (Continued)

Location	LED Name	Color	Description
Single Board Computer (SBC)	DIAG	Green	Not Used
(SBC)	Run	Green	SBC in operation
(SBC)	Buss Master (BM)	Green	Blinks during normal operation
Telephony Interface (TI) Cards	Board Fail (BD) Fail	Red	TI board failure
(TI) Cards	Active	Green	Idle - Blinks two seconds on two seconds off Calls Received - Blinks accelerate as call activity increases
(TI) Cards	Loss Of Signal (LOS)	Red	TAS received no signal from switch
(TI) Cards	Frame Red (FR-R)	Red	TAS unable to synchronize with switch. May indicate LOS of unframed signal
(TI) Cards	Frame Yellow (FR-Y)	Yellow	Yellow alarm from switch
(TI) Cards	Multi-Frame Red (MFR-R)	Red	TAS unable to synchronize with multi-frame signal from switch
(TI) Cards	Multi-Frame Yellow (MFR-Y)	Yellow	Yellow alarm from switch
(TI) Cards	Alarm Indication Signal (AIS)	Yellow	Switch is receiving no signal from TAS
Hard Drive		Green	Hard drive operational.

B

Connectors

Control Shelf Modules B–4

ACM/ASM/DCM/DSM/EILA/ILA/LIM/MPL/TSM Control Shelf Backplane Pin-Outs, Top Connector B–4

ACM/ASM/DCM/DSM/EILA/ILA/LIM/MPL/TSM Control Shelf Backplane Pin-Outs, Bottom Connector B–6

Extension Shelf Backplane (P/N 850-0356-01) B–9

General Purpose Relay Connector 01 ..... B–10

General Purpose Relay Connector 02 ..... B–11

General Purpose Serial Interface B–12

Interface Backplane Control B–13

Interprocessor Message Multiplexer Control Shelf B–15

Control Shelf IPMX A Backplane P8 ..... B–15

Control Shelf IPMX B Backplane P24 ..... B–17

Interprocessor Message Multiplexer Extension Shelf B–20

Interprocessor Message Transport Connector B–22

Local Maintenance Center Alarm Backplane B–23

Power Connector Extension Backplane B–24

Power Connector Control Backplane B–25

Remote Maintenance Center Alarm Control Backplane B–26

Serial Port Control Backplane B–27

Shelf Power B–28

Table B-1. Control Shelf Backplanes (P/N 850-0330-03/04 and P/N 850-0330-05/06)

Control Shelf Backplane (P/N 850-0330-03/04)	Control Shelf Backplane (P/N 850-0330-05/06)	Control Shelf Backplane (P/N 850-0330-03/04)	Control Shelf Backplane (P/N 850-0330-05/06)
J-1 B POWER	J-1 B POWER PRIMARY	J-38 PORT 1A	J-45 PORT 1A
J-2 B FAN POWER	J-8 B FAN POWER	J-39 RALM 3	J-46 RALM 3
J-3 A FAN POWER	J-9 A FAN POWER	J-40 LMC	J-47 LMC
	J-10 A POWER SECONDARY	J-41 SECONDARY BITS	J-48 SECONDARY BITS
	J-2 B POWER SECONDARY	J-42 PRIMARY BITS	J-49 PRIMARY BITS
J-4 A POWER	J-11 A POWER PRIMARY	J-43 PORT 10B	J-50 PORT 10B
J-5 RALM0	J-13 RALM0	J-44 PORT 9B	J-51 PORT 9B
J-6 B CLK 0	J-3 B CLK 0 J-4 B CLK 6	J-45 PORT 8B	J-52 PORT 8B
J-7 A CLK 0	J-7 A CLK 0 J-6 A CLK 6	J-46 PORT 7B	J-53 PORT 7B
J-8 A IMT IN GND	J-23 A IMT IN	J-47 PORT 6B	J-54 PORT 6B
J-9 A CLK IN	N/A	J-48 PORT 5B	J-55 PORT 5B
J-10 A CLK OUT	J-14 CI	J-49 PORT 4B	J-56 PORT 4B
J-11 RALM 1	J-15 RALM 1	J-50 PORT 3B	J-57 PORT 3B
J-12 B CLK 2	J-16 B CLK 2 J-17 B CLK 7	J-51 PORT 2B	J-58 PORT 2B
J-13 B CLK 1	J-18 B CLK 1	J-52 PORT 1B	J-59 PORT 1B
J-14 A CLK 2	J-21 A CLK 2	J-53 RALM4	J-61 RALM4 J-60 RALM 6
J-15 A CLK 1	J-20 A CLK 1	J-54 B CLK4	J-62 B CLK 4
J-16 A IMT OUT	J-22 A IMT OUT	J-55 B CLK 3	J-63 B CLK 3
J-17 MMI	J-24 MMI 0	J-56 A CLK 4	J-64 A CLK 4
J-18 MMI	J-25 MMI 1	J-57 A CLK 3	J-65 A CLK 3
J-19 MMI	J-26 MMI 2	J-58 B IMT IN	J-75 B IMT IN
J-20 MMI	J-27 MMI 3	J-59 B CLK IN	N/A
J-21 MMI	J-28 MMI 4	J-60 B CLK OUT	N/A

Table B-1. Control Shelf Backplanes (P/N 850-0330-03/04 and P/N 850-0330-05/06)

Control Shelf Backplane (P/N 850-0330-03/04)	Control Shelf Backplane (P/N 850-0330-05/06)	Control Shelf Backplane (P/N 850-0330-03/04)	Control Shelf Backplane (P/N 850-0330-05/06)
J-22 MMI	J-29 MMI 5	J-61 RALM5	J-68 RALM5
J-23 MMI	J-30 MMI 6	J-62 B CLK 5	J-70 B CLK 5 J-71 GP01
J-24 MMI	J-31 MMI 7	J-63 A CLK 5	J-72 A CLK 5
J-25 RALM2	J-32 RALM2	J-64 B IMT OUT	J-74 B IMT OUT
J-26 RMC	J-33 RMC	J-65 MMI 8	J-76 MMI 8
J-27 ROW ALM	J-34 ROW ALM	J-66 MMI 9	J-77 MMI 9
J-28 EXT ALARM	J-35 CUST ALM 1 J-66 CUST ALM 2	J-67 MMI 10	J-78 MMI 10
J-29 PORT 10A	J-36 PORT 10A	J-68 MMI 11	J-79 MMI 11
J-30 PORT 9A	J-37 PORT 9A	J-69 MMI 12	J-80 MMI 12
J-31 PORT 8A	J-38 PORT 8A	J-70 MMI 13	J-81 MMI 13
J-32 PORT 7A	J-39 PORT 7A	J-71 MMI 14	J-82 MMI 14
J-33 PORT 6A	J-40 PORT 6A	J-72 MMI 15	J-83 MMI 15
J-34 PORT 5A	J-41 PORT 5A	J-73 GP02	J-69 OAPALM
J-35 PORT 4A	J-42 PORT 4A	J-74 OAPALM J-75 GP01	J-5 GP02 J-71 GP01
J-36 PORT 3A	J-43 PORT 3A	J-76 GPSI	J-73 GPS1
J-37 PORT 2A	J-44 PORT 2A		J-67 RALM7

NOTE: This table is a cross reference between Control Shelf backplanes (P/N 850-0330-03/04 and P/N 850-0330-05/06).

Control Shelf Modules

ACM/ASM/DCM/DSM/EILA/ILA/LIM/MPL/TSM/ Control Shelf Backplane top connectors P6, P7, and P9 through P16 and bottom connectors P22, P23, and P25 through P32.

This section details the backplane circuit board connectors used for Application Communication Modules (ACMs), Application Service Modules (ASMs), Database Communications Modules (DCMs), and Database Services Modules (DSMs), Enhanced Integrated Link Interface Modules Appliques (EILAs), Integrated Link Interface Modules Appliques (ILAs), Link Interface Modules (LIMs), Multi-Port LIMs (MPLs), Translation Service Modules (TSMs).

ACM/ASM/DCM/DSM/EILA/ILA/LIM/MPL/TSM Control Shelf Backplane Pin-Outs, Top Connector

Table B-2 lists pinouts for connectors P6, P7, and P9 through P16 on the control shelf.

Refer to Table B-4 on page B-7 for signal symbol values ($, #, &, @, and ^).

Figure B-1. ACM/ASM/DCM/DSM/EILA/ILA/LIM/MPL/TSM Control Shelf Backplane Pin-Outs, Top Connector

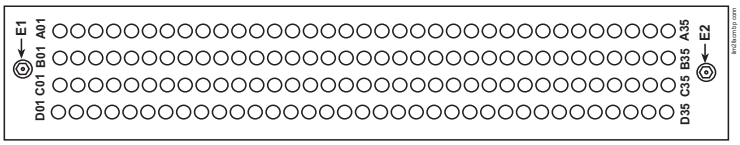

Table B-2. ACM/ASM/DCM/DSM/EILA/ILA/LIM/MPL/TSM Control Shelf Backplane Pin-Outs, Top Connector

Pin	Signal	Pin	Signal	Pin	Signal	Pin	Signal
A01	LGND	B01	LGND	C01	EBI_^XA02	D01	EBI_^XA14
A02	ASERO#-_50	B02	LGND	C02	EBI_^XA03	D02	EBI_^XA15
A03	ASERO#+_50	B03	LGND	C03	EBI_^XA04	D03	EBI_^XA16
A04	LGND	B04	LGND	C04	EBI_^XA05	D04	EBI_^XA17
A05		B05	LGND	C05	EBI_^XA06	D05	EBI_^XA18
A06		B06	LGND	C06	EBI_^XA07	D06	EBI_^XA19
A07	LGND	B07	LGND	C07	EBI_^XA08	D07	EBI_^XA20
A08	ASEL#-	B08		C08	EBI_^XA09	D08	EBI_^XA21
A09		B09		C09	EBI_^XA10	D09	EBI_^XA22

Table B-2. ACM/ASM/DCM/DSM/EILA/ILA/LIM/MPL/TSM Control Shelf Backplane Pin-Outs, Top Connector

Pin	Signal	Pin	Signal	Pin	Signal	Pin	Signal
A10	AMUXIN-	B10		C10		D10	EBI_^XA23
A11	LGND	B11	AIN#-	C11		D11	EBI_^XA24
A12		B12	LGND	C12		D12	EBI_^XA25
A13		B13	LGND	C13		D13	EBI_^XA26
A14	LGND	B14	LGND	C14		D14	EBI_^XA27
A15	ASERI#-_50	B15	LGND	C15		D15	
A16	ASERI#+_50	B16	LGND	C16		D16	
A17	LGND	B17	LGND	C17		D17	
A18		B18		C18		D18	
A19	LGND	B19	MBUSSRX+ _50	C19	LGND*	D19	
A20		B20	MBUSSRX- _50	C20		D20	LGND
A21	LGND	B21	MBUSSTX+ _50	C21	MA56KHZ+_50	D21	
A22		B22	MBUSSTX- _50	C22	MA56KHZ-_50	D22	LGND
A23	LGND	B23		C23	MA8KHZ+_50	D23	
A24	&-IF1_60	B24		C24	MA8KHZ-_50	D24	LGND
A25	LGND	B25		C25	EBI_^XSP4	D25	EBI_^XSP5
A26	&-IF2_60	B26		C26	EBI_^XA11	D26	
A27	LGND	B27		C27	EBI_^XA12	D27	
A28	&-IF3_60	B28	&-IF10_60	C28	EBI_^XA13	D28	LGND
A29	LGND	B29	&-IF19_60	C29	EBI_^BREQ-	D29	
A30	&-IF4_60	B30	&-IF20_60	C30	EBI_^BG-	D30	LGND
A31	&-IF5_60	B31	&-IF21_60	C31	EBI_^XIRQ-	D31	
A32	&-IF6_60	B32	&-IF22_60	C32	EBI_^HOSTSAN-	D32	LGND
A33	&-IF7_60	B33	&-IF23_60	C33	EBI_^GSTSAN-	D33	
A34	&-IF8_60	B34	&-IF25_60	C34	&-IF24_60	D34	LGND
A35	&-IF9_60	B35	&-IF18_60	C35	&-IF26_60	D35	
E2	LGND	*Connection to logic ground for slots 2 (P16), 4 (P14), 6 (P12), 8 (P10) only.					

ACM/ASM/DCM/DSM/EILA/ILA/LIM/MPL/TSM
Control Shelf Backplane Pin-Outs, Bottom Connector

Table B-3 Pinouts for ACM/ASM/DCM/DSM/EILA/ILA/LIM/MPL/TSM Control Shelf Backplane bottom connectors P22, P23, and P25 through P32

Figure B-2. ACM/ASM/DCM/DSM/EILA/ILA/LIM/MPL/TSM Control Shelf Backplane Pin-Outs, Bottom Connector

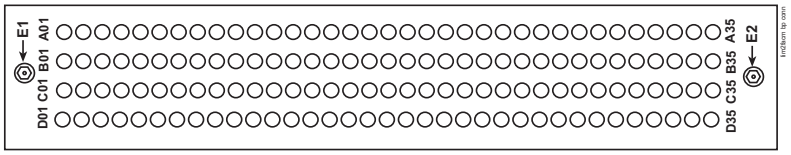

Table B-3. ACM/ASM/DCM/DSM/EILA/ILA/LIM/MPL/TSM Control Shelf Backplane Pin-Outs, Bottom Connector

Pin	Signal	Pin	Signal	Pin	Signal	Pin	Signal
A01	LGND	B01	&-IF1_60	C01	&-IF10_60	D01	IN2-
A02	&-IF3_60	B02	&-IF2_60	C02	&-IF19_60	D02	LGND
A03	LGND	B03		C03	&-IF20_60	D03	LGND
A04	&-IF4_60	B04		C04	&-IF21_60	D04	LGND
A05	&-IF5_60	B05		C05	&-IF22_60	D05	LGND
A06	&-IF6_60	B06	&-IF24_60	C06	&-IF23_60	D06	LGND
A07	&-IF7_60	B07	&-IF26_60	C07		D07	@-IF25_60
A08	&-IF8_60	B08	&-IF9_60	C08	&-IF18_60	D08	LGND
A09	LGND	B09		C09		D09	LGND
A10		B10		C10	EBI_^XSP2	D10	EBI_^XSP3
A11	LGND	B11	LGND	C11	EBI_^XBE0-	D11	EBI_^XD00
A12	BSERO@-_50	B12	LGND	C12	EBI_^XBE1-	D12	EBI_^XD01
A13	BSERO@-_50	B13	LGND	C13	EBI_^XBE2-	D13	EBI_^XD02
A14	LGND	B14	LGND	C14	EBI_^XBE3-	D14	EBI_^XD03
A15		B15	LGND	C15	EBI_^XBS8-	D15	EBI_^XD04
A16		B16	LGND	C16	EBI_^XBS16-	D16	EBI_^XD05
A17	LGND	B17	LGND	C17	EBI_^ADS0-	D17	EBI_^XD06
A18	BSEL@-	B18		C18	EBI_^ADS1-	D18	EBI_^XD07
A19		B19		C19	EBI_^XW/R	D19	EBI_^XD08
A20	BMUXIN-	B20		C20	EBI_^XM/IO	D20	EBI_^XD09

Table B-3. ACM/ASM/DCM/DSM/EILA/ILA/LIM/MPL/TSM Control Shelf Backplane Pin-Outs, Bottom Connector

Pin	Signal	Pin	Signal	Pin	Signal	Pin	Signal
A21	LGND	B21	BIN@-	C21	EBI_^XSP1	D21	EBI_^XD10
A22		B22	LGND	C22	EBI_^XINTA-	D22	EBI_^XD11
A23		B23	LGND	C23	EBI_^XRDY-	D23	EBI_^XD12
A24	LGND	B24	LGND	C24	EBI_^XCAS0-	D24	EBI_^XD13
A25	BSERI@-_50	B25	LGND	C25	EBI_^XCAS1-	D25	EBI_^XD14
A26	BSERI@+_50	B26	LGND	C26	EBI_^XCAS2-	D26	EBI_^XD15
A27	LGND	B27	LGND	C27		D27	
A28		B28		C28		D28	LGND
A29	LGND	B29		C29		D29	
A30		B30		C30		D30	LGND
A31	LGND	B31		C31	MB56KHZ+_50	D31	
A32		B32		C32	MB56KHZ-_50	D32	LGND
A33	LGND	B33		C33	MB8KHZ+_50	D33	
A34		B34		C34	MB8KHZ-_50	D34	LGND
A35	CHASSIS GND	B35	CHASSIS GND	C35	CHASSIS GND	D35	CHASSIS GND

Table B-4 lists the signal symbol values used in Table B-2.

Table B-4. ACM/ASM/DCM/DSM/EILA/ILA/LIM/MPL/TSM Backplane Pin-Out Symbols

Slot/Connector	Interface Port	Address	Signal Symbol Values				
			$	#	&	@	^
1 top / P16	0A	0	1A	L	0A		0
1 bottom / P32	0B	0	1A		0B	A	0
2 top / P15	1A	1	1A	K	1A		0
2 bottom / P31	1B	1	1A		1B	B	0
3 top / P14	2A	2	1B	J	2A		2
3 bottom / P30	2B	2	1B		2B	C	2
4 top / P13	3A	3	1B	I	3A		2
4 bottom / P29	3B	3	1B		3B	D	2
5 top / P12	4A	4	2A	H	4A		4

Table B-4. ACM/ASM/DCM/DSM/EILA/ILA/LIM/MPL/TSM Backplane Pin-Out Symbols (Continued)

Slot/Connector	Interface Port	Address	Signal Symbol Values				
			$	#	&	@	^
5 bottom / P28	4B	4	2A		4B	E	4
6 top / P11	5A	5	2A	G	5A		4
6 bottom / P27	5B	5	2A		5B	F	4
7 top / P10	6A	6	2B	F	6A		6
7 bottom / P26	6B	6	2B		6B	G	6
8 top / P9	7A	7	2B	E	7A		6
8 bottom / P25	7B	7	2B		7B	H	6
11 top/P7	8A	8	4A	D	8A		8
11 bottom/P23	8B	8	4A		8B	I	8
12 top/P6	9A	9	4A	C	9A		8
12 bottom/P22	9B	9	4A		9B	J	8

Extension Backplane (P/N 850-0356-01)

Extension Shelf Backplane (P/N 850-0356-01)

Figure B-3. Extension Shelf Backplane (P/N 850-0356-01)

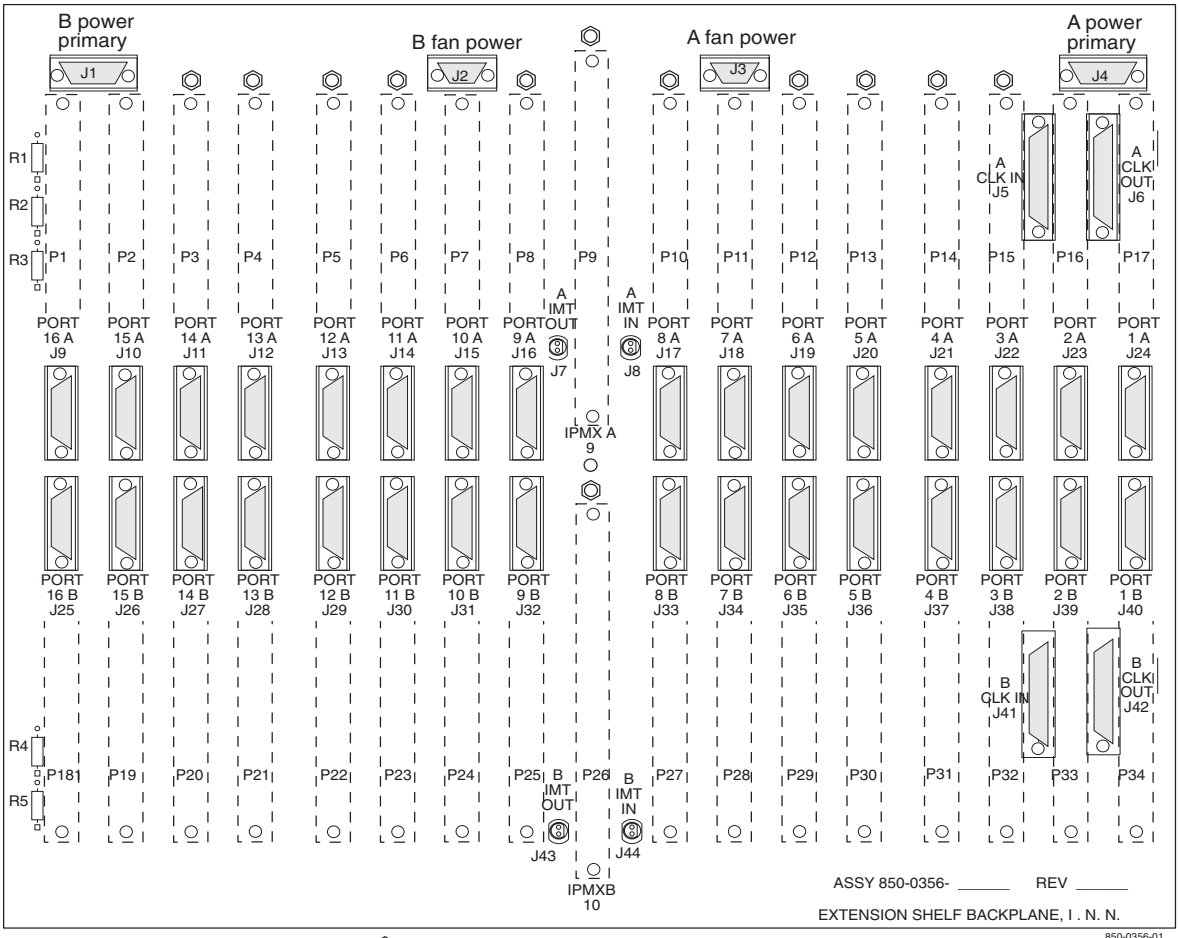

NOTE: ⬡ Conducts -48VDC for the printed circuit board (HOT)

General Purpose Relay Connector 01

J75 on backplane (P/N 850-0330-03/04) and
J71 on backplane (P/N 850-0330-05/06)

Figure B-4. General Purpose Relay Connector 01

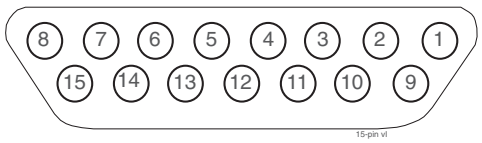

Table B-5. General Purpose Relay Connector 01

Pin	Signal
4, 8, 10, 15	not used
1	GPRNO0 - General Purpose Relay 0, Normally Open
2	GPRCOM0 - General Purpose Relay 0, Common
3	GPRNC0 - General Purpose Relay 0, Normally Closed
5	GPRNO1 - General Purpose Relay 1, Normally Open
6	GPRCOM1 - General Purpose Relay 1, Common
7	GPRNC1 - General Purpose Relay 1, Normally Closed
9	Logic ground
11	OAP1_RST+ - OAP 1 reset, +
12	OAP1_RST- - OAP 1 reset, -
13	OAP2_RST+ - OAP 2 reset, +
14	OAP2_RST- - OAP 2 reset, -

General Purpose Relay Connector 02

J73 on backplane (P/N 850-0330-03/04) and
J75 on backplane (P/N 850-0330-05/06)

Figure B-5. General Purpose Relay Connector 02

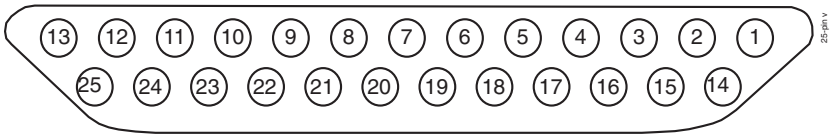

Table B-6. General Purpose Relay Connector 02

Pin	Signal
1, 2, 13, 14, 18, 25	not used
3	GPRNC2 - General Purpose Relay 2, Normally Closed
4	GPRCOM2 - General Purpose Relay 2, Common
5	GPRNO2 - General Purpose Relay 2, Normally Open
6	GPRNC2 - General Purpose Relay 3, Normally Closed
7	GPRCOM2 - General Purpose Relay 3, Common
8	GPRNO2 - General Purpose Relay 3, Normally Open
9	GPRNC2 - General Purpose Relay 4, Normally Closed
10	GPRCOM2 - General Purpose Relay 4, Common
11	GPRNO2 - General Purpose Relay 4, Normally Open
12	Logic ground
15	GPRNC2 - General Purpose Relay 5, Normally Closed
16	GPRCOM2 - General Purpose Relay 5, Common
17	GPRNO2 - General Purpose Relay 5, Normally Open
19	GPRNC2 - General Purpose Relay 6, Normally Closed
20	GPRCOM2 - General Purpose Relay 6, Common
21	GPRNO2 - General Purpose Relay 6, Normally Open
22	GPRNC2 - General Purpose Relay 7, Normally Closed
23	GPRCOM2 - General Purpose Relay 7, Common
24	GPRNO2 - General Purpose Relay 7, Normally Open

General Purpose Serial Interface

J76 on backplane (P/N 850-0330-03/04) and
J73 on backplane (P/N 850-0330-05/06)

Figure B-6. General Purpose Serial Interface Connector 01, GPSI

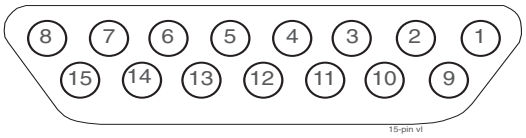

Table B-7. General Purpose Serial Interface Connector 01, GPSI

Pin	Signal
1, 2, 3, 8, 9, 10, 11, 12, 13, 14, 15	Not used
4	RX_HO - Holdover Clock Receive Data
5	TX_HO - Holdover Clock Transmit Data
6	DTR_HO - Holdover Clock Data Terminal Ready
7	Logic ground

Interface Backplane Control

J29 - J38, J43 - J52 on backplane (P/N 850-0330-03/04) and
J36 - J45, J50 - J59 on backplane (P/N 850-0330-05/06)

Figure B-7. Interface Connector

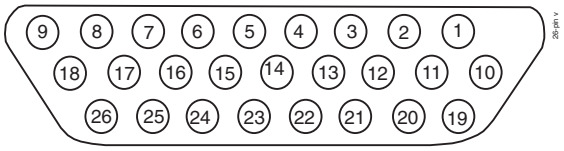

Table B-8. Interface Connector Pins and Signal

Interface Connector Pins and Signal									
DB-26 Pin	**V.35 Signal**	**V.35 Pin**	**DS0A/ OCU Signal**	**Ethernet Signal (ACM)**	**DB-26 Pin**	**V.35 Signal**	**V.35 Pin**	**DS0A/OCU Signal ATM**	**Ethernet Signal (ACM)**
1	RxCA	V		RXD-	14				
2	RxCB	X		RXD+	15				
3	TxCCA	Y		COL+	16				
4	TxCCB	AA		COL-	17				CHASS GND
5	TEST			-	18	LOOPL	J		
6	RLSD	F		TXD-	19	RTS	C		SIG GND
7	DSR	E			20	TxDA	P	TX-RING	+12VDC
8	CHASS GND	A		TXD+	21	TxDB	S	TX-TIP	+12VDC
9	CTS	D			22	RxDA	R	RX-RING	
10	SIG GND	B		SIG GND	23	RxDB	T	RX-TIP	
11					24	TxCTA	U		
12					25	TxCDB	W		
13					26	LOOPM	BB		

Table B-9. Interface Connectors, Ports, and Card Slots

Interface Connectors, Ports, and Card Slots				
Card slot	**Port**	**Connector**	**Port**	**Connector**
01	1A	J38	1B	J52
02	2A	J37	2B	J51
03	3A	J36	3B	J50
04	4A	J35	4B	J49
05	5A	J34	5B	J48
06	6A	J33	6B	J47
07	7A	J32	7B	J46
08	8A	J31	8B	J45
11	9A	J30	9B	J44
12	10A	J29	10B	J43

Interprocessor Message Multiplexer Control Shelf

J8, J24 on backplane (P/N 850-0330-03/04) and
J23, J31 on backplane (P/N 850-0330-05/06)

Control Shelf IPMX A Backplane P8

Figure B-8. Control Shelf IPMX A Backplane Pin-Outs

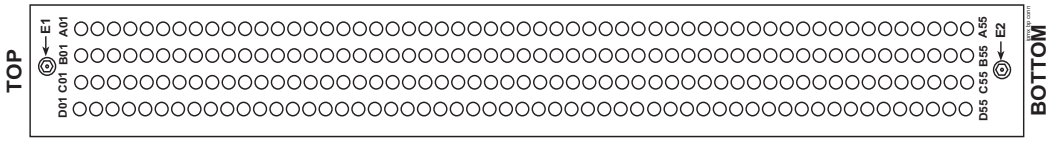

Table B-10. Control Shelf IPMX A Backplane Pin-Outs

Pin	Signal	Pin	Signal	Pin	Signal	Pin	Signal
A01	LGND	B01	LGND	C01	LGND	D01	LGND
A02	ASEROD-_50	B02	LGND	C02	ASEROE-_50	D02	LGND
A03	ASEROD+_50	B03	LGND	C03	ASEROE+_50	D03	LGND
A04	LGND	B04	ASELD-	C04	LGND	D04	ASELE-
A05	ASERID-_50	B05	LGND	C05	ASERIE-_50	D05	LGND
A06	ASERID+_50	B06	LGND	C06	ASERIE+_50	D06	LGND
A07	LGND	B07	AIND-	C07	LGND	D07	AINE-
A08	ASEROC-_50	B08	LGND	C08	ASEROF-_50	D08	LGND
A09	ASEROC+_50	B09	LGND	C09	ASEROF+_50	D09	LGND
A10	ABMUXIN-	B10	ASELC-	C10	LGND	D10	ASELF-
A11	ASERIC-_50	B11	LGND	C11	ASERIF-_50	D11	LGND
A12	ASERIC+_50	B12	LGND	C12	ASERIF+_50	D12	LGND
A13	LGND	B13	AINC-	C13	LGND	D13	AINF-
A14	ASEROB-_50	B14	LGND	C14	ASEROG-_50	D14	LGND
A15	ASEROB+_50	B15	LGND	C15	ASEROG+_50	D15	LGND
A16	LGND	B16	ASELB-	C16	LGND	D16	ASELG-
A17	ASERIB-_50	B17	LGND	C17	ASERIG-_50	D17	LGND
A18	ASERIB+_50	B18	LGND	C18	ASERIG+_50	D18	LGND
A19	LGND	B19	AINB-	C19	LGND	D19	AING-

Table B-10. Control Shelf IPMX A Backplane Pin-Outs (Continued)

Pin	Signal	Pin	Signal	Pin	Signal	Pin	Signal
A20		B20	LGND	C20	ASEROH-_50	D20	LGND
A21		B21	LGND	C21	ASEROH+_50	D21	LGND
A22	LGND	B22		C22	LGND	D22	ASELH-
A23		B23	LGND	C23	ASERIH-_50	D23	LGND
A24		B24	LGND	C24	ASERIH+_50	D24	LGND
A25	LGND	B25		C25	LGND	D25	AINH-
A26	ASEROA-_50	B26	LGND	C26	ASEROI-_50	D26	LGND
A27	ASEROA+_50	B27	LGND	C27	ASEROI+_50	D27	LGND
A28	LGND	B28	ASELA-	C28	LGND	D28	ASELI-
A29	ASERIA-_50	B29	LGND	C29	ASERII-_50	D29	LGND
A30	ASERIA+_50	B30	LGND	C30	ASERII+_50	D30	LGND
A31	LGND	B31	AINA-	C31	LGND	D31	AINI-
A32		B32	LGND	C32	ASEROJ-_50	D32	LGND
A33		B33	LGND	C33	ASEROJ+_50	D33	LGND
A34	LGND	B34		C34	LGND	D34	ASELJ-
A35		B35	LGND	C35	ASERIJ-_50	D35	LGND
A36		B36	LGND	C36	ASERIJ+_50	D36	LGND
A37	LGND	B37		C37	LGND	D37	AINJ-
A38		B38	LGND	C38	ASEROK-_50	D38	LGND
A39		B39	LGND	C39	ASEROK+_50	D39	LGND
A40	LGND	B40		C40	LGND	D40	ASELK-
A41		B41	LGND	C41	ASERIK-_50	D41	LGND
A42		B42	LGND	C42	ASERIK+_50	D42	LGND
A43	LGND	B43		C43	LGND	D43	AINK-
A44		B44	LGND	C44	ASEROL-_50	D44	LGND
A45		B45	LGND	C45	ASEROL+_50	D45	LGND
A46	LGND	B46		C46	LGND	D46	ASELL-
A47		B47	LGND	C47	ASERIL-_50	D47	LGND
A48		B48	LGND	C48	ASERIL+_50	D48	LGND
A49	LGND	B49		C49	LGND	D49	AINL-
A50	AIMTIN-_78	B50	LGND	C50	AIMTOUT-_78	D50	LGND

Table B-10. Control Shelf IPMX A Backplane Pin-Outs (Continued)

Pin	Signal	Pin	Signal	Pin	Signal	Pin	Signal
A51	AIMTIN+_78	B51	LGND	C51	AIMTOUT+_78	D51	LGND
A52	LGND	B52	LGND	C52	LGND	D52	LGND
A53		B53	MBUSSRX-_50	C53	MBUSSRX+_50	D53	
A54		B54	MBUSSTX-_50	C54	MBUSSTX+_50	D54	LGND
A55	CHASSIS GND	B55	CHASSIS GND	C55	CHASSIS GND	D55	CHASSIS GND
E2	P3A48RTN						

Control Shelf IPMX B Backplane P24

Figure B-9. Control Shelf IPMX B Backplane Pin-Outs

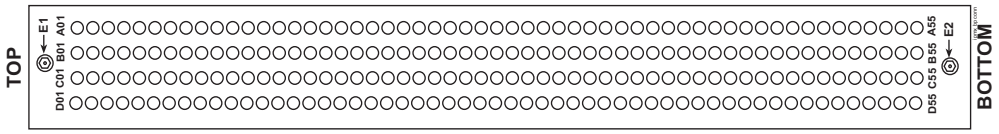

Table B-11. Control Shelf IPMX B Backplane Pin-Outs

Pin	Signal	Pin	Signal	Pin	Signal	Pin	Signal
A01	LGND	B01	LGND	C01	LGND	D01	LGND
A02	BSEROH-_50	B02	LGND	C02	BSEROI-_50	D02	LGND
A03	BSEROH+_50	B03	LGND	C03	BSEROI+_50	D03	LGND
A04	LGND	B04	BSELH-	C04	LGND	D04	BSELI-
A05	BSERIH-_50	B05	LGND	C05	BSERII-_50	D05	LGND
A06	BSERIH+_50	B06	LGND	C06	BSERII+_50	D06	LGND
A07	LGND	B07	BINH-	C07	LGND	D07	BINI-
A08	BSEROG-_50	B08	LGND	C08	BSEROJ-_50	D08	LGND
A09	BSEROG+_50	B09	LGND	C09	BSEROJ+_50	D09	LGND
A10	BMUXIN-	B10	BSELG-	C10	LGND	D10	BSELJ-
A11	BSERIG-_50	B11	LGND	C11	BSERIJ-_50	D11	LGND
A12	BSERIG+_50	B12	LGND	C12	BSERIJ+_50	D12	LGND
A13	LGND	B13	BING-	C13	LGND	D13	BINJ-

Table B-11. Control Shelf IPMX B Backplane Pin-Outs (Continued)

Pin	Signal	Pin	Signal	Pin	Signal	Pin	Signal
A14	BSEROF-_50	B14	LGND	C14	BSEROK-_50	D14	LGND
A15	BSEROF+_50	B15	LGND	C15	BSEROK+_50	D15	LGND
A16	LGND	B16	BINF-	C16	LGND	D16	BSELK-
A17	BSERIF-_50	B17	LGND	C17	BSERIK-_50	D17	LGND
A18	BSERIF+_50	B18	LGND	C18	BSERIK+_50	D18	LGND
A19	LGND	B19	BINF-	C19	LGND	D19	BINK-
A20	BSEROE-_50	B20	LGND	C20		D20	LGND
A21	BSEROE+_50	B21	LGND	C21		D21	LGND
A22	LGND	B22	BSELE-	C22	LGND	D22	
A23	BSERIE-_50	B23	LGND	C23		D23	LGND
A24	BSERIE+_50	B24	LGND	C24		D24	LGND
A25	LGND	B25	BINE-	C25	LGND	D25	
A26	BSEROD-_50	B26	LGND	C26	BSEROL-_50	D26	LGND
A27	BSEROD+_50	B27	LGND	C27	BSEROL+_50	D27	LGND
A28	LGND	B28	BSELD-	C28	LGND	D28	BSELL-
A29	BSERID-_50	B29	LGND	C29	BSERIL-_50	D29	LGND
A30	BSERID+_50	B30	LGND	C30	BSERIL+_50	D30	LGND
A31	LGND	B31	BIND-	C31	LGND	D31	BINL-
A32	BSEROC-_50	B32	LGND	C32		D32	LGND
A33	BSEROC+_50	B33	LGND	C33		D33	LGND
A34	LGND	B34	BSELC-	C34	LGND	D34	
A35	BSERIC-_50	B35	LGND	C35		D35	LGND
A36	BSERIC+_50	B36	LGND	C36		D36	LGND
A37	LGND	B37	BINC-	C37	LGND	D37	
A38	BSEROB-_50	B38	LGND	C38		D38	LGND
A39	BSEROB+_50	B39	LGND	C39		D39	LGND
A40	LGND	B40	BSELB-	C40	LGND	D40	
A41	BSERIB-_50	B41	LGND	C41		D41	LGND
A42	BSERIB+_50	B42	LGND	C42		D42	LGND
A43	LGND	B43	BINB-	C43	LGND	D43	
A44	BSEROA-_50	B44	LGND	C44		D44	LGND

Table B-11. Control Shelf IPMX B Backplane Pin-Outs (Continued)

Pin	Signal	Pin	Signal	Pin	Signal	Pin	Signal
A45	BSEROA+_50	B45	LGND	C45		D45	LGND
A46	LGND	B46	BSELA-	C46	LGND	D46	
A47	BSERIA-_50	B47	LGND	C47		D47	LGND
A48	BSERIA+_50	B48	LGND	C48		D48	LGND
A49	LGND	B49	BINA-	C49	LGND	D49	
A50	BIMTIN-_78	B50	LGND	C50	BIMTOUT-_78	D50	LGND
A51	BIMTIN+_78	B51	LGND	C51	BIMTOUT+_78	D51	LGND
A52	LGND	B52	LGND	C52	LGND	D52	LGND
A53		B53	MBUSSRX-_50	C53	MBUSSRX+_50	D53	
A54		B54	MBUSSTX-_50	C54	MBUSSTX+_50	D54	LGND
A55	CHASSIS GND	B55	CHASSIS GND	C55	CHASSIS GND	D55	CHASSIS GND
E2	P3B48RTN						

Interprocessor Message Multiplexer Extension Shelf

IPMX Extension Shelf Backplane Pin-Outs P9, P26

Figure B-10. IPMX Extension Shelf Backplane Connector P9

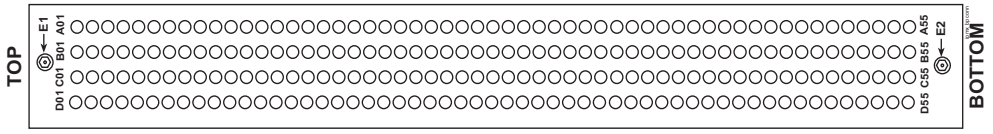

Table B-12. IPMX Extension Shelf Backplane Pin-Outs P9 and P26

Pin #	Signal	Pin #	Signal	Pin #	Signal	Pin #	Signal
A01	LGND	B01	LGND	C01	LGND	D01	LGND
A02	$SEROH-_50	B02	LGND	C02	$SEROI-_50	D02	LGND
A03	$SEROH+_50	B03	LGND	C03	$SEROI+_50	D03	LGND
A04	LGND	B04	$SELH-	C04	LGND	D04	$SELI-
A05	$SERIH-_50	B05	LGND	C05	$SERII-_50	D05	LGND
A06	$SERIH+_50	B06	LGND	C06	$SERII+_50	D06	LGND
A07	LGND	B07	$INH-	C07	LGND	D07	$INI-
A08	$SEROG-_50	B08	LGND	C08	$SEROJ-_50	D08	LGND
A09	$SEROG+_50	B09	LGND	C09	$SEROJ+_50	D09	LGND
A10	$BMUXIN-	B10	$SELG-	C10	LGND	D10	$SELJ-
A11	$SERIG-_50	B11	LGND	C11	$SERIJ-_50	D11	LGND
A12	$SERIG+_50	B12	LGND	C12	$SERIJ+_50	D12	LGND
A13	LGND	B13	$ING-	C13	LGND	D13	$INJ-
A14	$SEROF-_50	B14	LGND	C14	$SEROK-_50	D14	LGND
A15	$SEROF+_50	B15	LGND	C15	$SEROK+_50	D15	LGND
A16	LGND	B16	$INF-	C16	LGND	D16	$SELK-
A17	$SERIF-_50	B17	LGND	C17	$SERIK-_50	D17	LGND
A18	$SERIF+_50	B18	LGND	C18	$SERIK+_50	D18	LGND
A19	LGND	B19	$INF-	C19	LGND	D19	$INK-
A20	$SEROE-_50	B20	LGND	C20	$SEROL-_50	D20	LGND
A21	$SEROE+_50	B21	LGND	C21	$SEROL+_50	D21	LGND
A22	LGND	B22	$SELE-	C22	LGND	D22	$SELL-

Table B-12. IPMX Extension Shelf Backplane Pin-Outs P9 and P26 (Continued)

Pin #	Signal	Pin #	Signal	Pin #	Signal	Pin #	Signal
A23	$SERIE-_50	B23	LGND	C23	$SERIL-_50	D23	LGND
A24	$SERIE+_50	B24	LGND	C24	$SERIL+_50	D24	LGND
A25	LGND	B25	$INE-	C25	LGND	D25	$INL-
A26	$SEROD-_50	B26	LGND	C26	$SEROM-_50	D26	LGND
A27	$SEROD+_50	B27	LGND	C27	$SEROM+_50	D27	LGND
A28	LGND	B28	$SELD-	C28	LGND	D28	$SELM-
A29	$SERID-_50	B29	LGND	C29	$SERIM-_50	D29	LGND
A30	$SERID+_50	B30	LGND	C30	$SERIM+_50	D30	LGND
A31	LGND	B31	$IND-	C31	LGND	D31	$INM-
A32	$SEROC-_50	B32	LGND	C32	$SERON-_50	D32	LGND
A33	$SEROC+_50	B33	LGND	C33	$SERON+_50	D33	LGND
A34	LGND	B34	$SELC-	C34	LGND	D34	$SELN-
A35	$SERIC-_50	B35	LGND	C35	$SERIN-_50	D35	LGND
A36	$SERIC+_50	B36	LGND	C36	$SERIN+_50	D36	LGND
A37	LGND	B37	$INC-	C37	LGND	D37	$INN-
A38	$SEROB-_50	B38	LGND	C38	$SEROO-_50	D38	LGND
A39	$SEROB+_50	B39	LGND	C39	$SEROO+_50	D39	LGND
A40	LGND	B40	$SELB-	C40	LGND	D40	$SELO-
A41	$SERIB-_50	B41	LGND	C41	$SERIO-_50	D41	LGND
A42	$SERIB+_50	B42	LGND	C42	$SERIO+_50	D42	LGND
A43	LGND	B43	$INB-	C43	LGND	D43	$INO-
A44	$SEROA-_50	B44	LGND	C44	$SEROP-_50	D44	LGND
A45	$SEROA+_50	B45	LGND	C45	$SEROP+_50	D45	LGND
A46	LGND	B46	$SELA-	C46	LGND	D46	$SELP-
A47	$SERIA-_50	B47	LGND	C47	$SERIP-_50	D47	LGND
A48	$SERIA+_50	B48	LGND	C48	$SERIP+_50	D48	LGND
A49	LGND	B49	$INA-	C49	LGND	D49	$INP-
A50	$IMTIN-_78	B50	LGND	C50	$IMTOUT-_78	D50	LGND
A51	$IMTIN+_78	B51	LGND	C51	$IMTOUT+_78	D51	LGND
A52	LGND	B52	LGND	C52	LGND	D52	LGND

Table B-12. IPMX Extension Shelf Backplane Pin-Outs P9 and P26 (Continued)

Pin #	Signal	Pin #	Signal	Pin #	Signal	Pin #	Signal
A53		B53	MBUSSRX-_50	C53	MBUSSRX+_50	D53	
A54		B54	MBUSSTX-_50	C54	MBUSSTX+_50	D54	LGND
A55	CHASSIS GND	B55	CHASSIS GND	C55	CHASSIS GND	D55	CHASSIS GND
E2	P3$48RTN						
$= A or B, for IPMX-A (P9) and IPMX-B (P26) respectively							

Interprocessor Message Transport Connector

J8, J16, J58, J64 on backplane (P/N 850-0330-03/04) and
J23, J22, J75, J74 on backplane (P/N 850-0330-05/06)

Figure B-11. IMT Connector

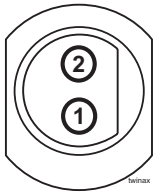

Table B-13. IMT Connector Pins

Connector	Pin	Signal
A IMT IN backplane (P/N 850-0330-03/04)(J8) A IMT IN backplane (P/N 850-0330-05/06)(J23)	1	AIMTIN+_78
	2	AIMTIN-_78
A IMT OUT backplane (P/N 850-0330-03/04)(J16) A IMT OUT backplane (P/N 850-0330-05/06)(J22)	1	AIMTOUT+_78
	2	AIMTOUT-_78
B IMT IN backplane (P/N 850-0330-03/04)(J58) B IMT IN backplane (P/N 850-0330-05/06)(J75)	1	BIMTIN+_78
	2	BIMTIN-_78
B IMT OUT backplane (P/N 850-0330-03/04)(J64) B IMT OUT backplane (P/N 850-0330-05/06)(J74)	1	BIMTOUT+_78
	2	BIMTOUT-_78

Local Maintenance Center Alarm Backplane

J40 on backplane (P/N 850-0330-03/04) and
J47 on backplane (P/N 850-0330-05/06)

Figure B-12. Local Maintenance Center Alarm Connector

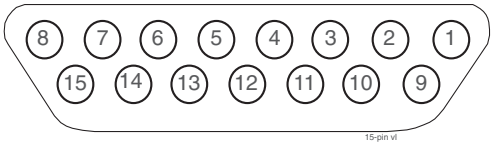

Table B-14. Local Maintenance Center Alarm Connector

Pin	Signal
1, 3, 4, 5, 11, 12	Not used
2	LMCANC - Local Maintenance Center Audible Alarm, Normally Closed
6	LMCVMJNC - Local Maintenance Center Major Alarm, Normally Closed
7	LMCVMNNC - Local Maintenance Center Minor Alarm, Normally Closed
8	LMCVCRNC - Local Maintenance Center Critical Alarm, Normally Closed
9	LMCACOM - Local Maintenance Center Audible Alarm Common
10	LMCANO - Local Maintenance Center Audible alarm, normally Open
13	LMCVCOM - Local Maintenance Center Common
14	LMCVMJNO - Local Maintenance Center Major Alarm, Normally Open
15	LMCVMNNO - Local Maintenance Center Minor Alarm, Normally Open

Power Connector Extension Backplane

J1, J4 (P/N 850-0356-01), J1, J4, Primary and J45, J46 Secondary (P/N 850-0356-03)

Figure B-13. Power Connector

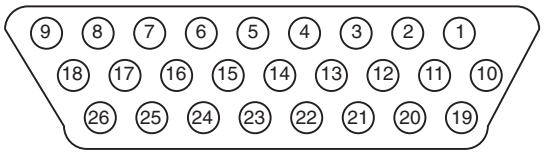

Table B-15. Power Connector

Pin	Signal	Pin	Signal
1	P5$48VDC	14	LGND
2	P5$48RTN	15	P3$48RTN
3	P4$48VDC	16	P3$48VDC
4	P4$48RTN	17	P2$48RTN
5	LGND	18	P2$48VDC
6	P3$48RTN	19	P1$48RTN
7	P3$48VDC	20	P1$48RTN
8	P2$48RTN	21	P1$48VDC
9	P2$48VDC	22	P1$48VDC
10	P5$48VDC	23	PF$48RTN
11	P5$48RTN	24	PF$48RTN
12	P4$48VDC	25	PF$48VDC
13	P4$48RTN	26	PF$48VDC
$= A or B, A POWER (J4) or B POWER (J1)			

Power Connector Control Backplane

J1, J4 on backplane (P/N 850-0330-03/04)
J1, J11 Primary and J2, J10 Secondary on backplane (P/N 850-0330-05/06)

Figure B-14. Power Connector

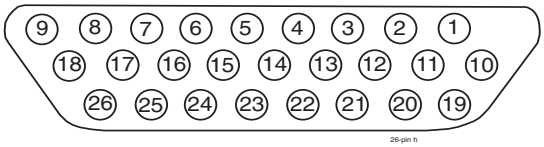

Table B-16. Power Connector

Pin	Signal	Pin	Signal
1	P5$48VDC	14	LGND
2	P5$48RTN	15	P3$48RTN
3	P4$48VDC	16	P3$48VDC
4	P4$48RTN	17	P2$48RTN
5	LGND	18	P2$48VDC
6	P3$48RTN	19	P1$48RTN
7	P3$48VDC	20	P1$48RTN
8	P2$48RTN	21	P1$48VDC
9	P2$48VDC	22	P1$48VDC
10	P5$48VDC	23	PF$48RTN
11	P5$48RTN	24	PF$48RTN
12	P4$48VDC	25	PF$48VDC
13	P4$48RTN	26	PF$48VDC
$= A or B, A POWER (J4) or B POWER (J1)			

Remote Maintenance Center Alarm Control Backplane

J26 on backplane (P/N 850-0330-03/04) and
J33 on backplane (P/N 850-0330-05/06)

Figure B-15. Remote Maintenance Center Alarm Connector

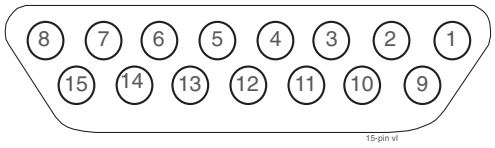

Table B-17. Remote Maintenance Center Alarm Connector

Pin	Signal
1, 3, 4, 5, 9, 11, 12	not used
2	RMCANC - Remote Maintenance Center Audible Alarm, Normally Closed
6	RMCMJNC - Remote Maintenance Center Major Alarm, Normally Closed
7	RMCMNNC - Remote Maintenance Center Minor Alarm, Normally Closed
8	RMCCRNC - Remote Maintenance Center Critical Alarm, Normally Closed
10	RMCANO - Remote Maintenance Center Audible Alarm, Normally Open
13	RMCCOM - Remote Maintenance Center Common
14	RMCMJNO - Remote Maintenance Center Major Alarm, Normally Open
15	RMCMNNO - Remote Maintenance Center Minor Alarm, Normally Open

Serial Port Control Backplane

J17 - J24, J65 - J72 on backplane (P/N 850-0330-03/04) and J24 - J31, J76 - J83 on backplane (P/N 850-0330-05/06)

Figure B-16. Serial Port Connector

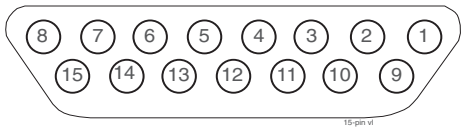

Table B-18. Serial Port Connector

Pin	Signal	Pin	Signal
1		9	
2		10	
3	DCD$	11	
4	RX$	12	
5	TX$	13	CTS$
6	DTR$	14	RTS$
7	logic ground	15	
8			
$= 0 through 15, MMI0 through MMI15 respectively, J17 through J24 and J65 through J72 respectively			

Shelf Power

Shelf Power Connector P1, P2, P3

Figure B-17. Shelf Power Connector

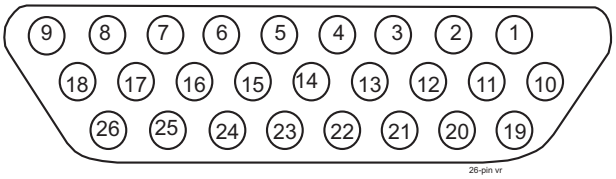

Table B-19. Shelf Power Connector

Connector	Fuse Position	Pin Numbers	Circuit Descriptions
P1 (to top shelf in frame)	1	3 and 12	+48VDC
		2 and 11	48VDC return
	2	1 and 10	+48VDC
		19 and 20	48VDC return
	3	21 and 22	+48VDC
		4 and 13	48VDC return
	4	23 and 24	+48VDC
		6 and 15	48VDC return
	5	9 and 18	+48VDC
		8 and 17	48VDC return
	6	7 and 16	+48VDC
		25 and 26	48VDC return

Table B-19. Shelf Power Connector (Continued)

Connector	Fuse Position	Pin Numbers	Circuit Descriptions
P2 (to middle shelf in frame)	7	3 and 12	+48VDC
		2 and 11	48VDC return
	8	1 and 10	+48VDC
		19 and 20	48VDC return
	9	21 and 22	+48VDC
		4 and 13	48VDC return
	10	23 and 24	+48VDC
		6 and 15	48VDC return
	11	9 and 18	+48VDC
		8 and 17	48VDC return
	12	7 and 16	+48VDC
		25 and 26	48VDC return
P3 (to bottom shelf in frame)	13	3 and 12	+48VDC
		2 and 11	48VDC return
	14	1 and 10	+48VDC
		19 and 20	48VDC return
	15	21 and 22	+48VDC
		4 and 13	48VDC return
	16	23 and 24	+48VDC
		6 and 15	48VDC return
	17	9 and 18	+48VDC
		8 and 17	48VDC return
	18	7 and 16	+48VDC
		25 and 26	48VDC return
P1, P2, and P3		5 and 14	logic ground
NOTES: A side and B side connectors, fuse positions, and pins are identical. All return pins are common.			

C

Cables

Cables by Part Numbers

Labeling C–4

Introduction C–6

803-0029-01 MPL Card Diagnostic Cable C–7

804-0176-01 Converter C–7

804-1830-01 Coaxial Cable Adapter C–8

830-0224-xx Drive Power Cable C–9

830-0231-xx Local Maintenance Center Cable C–10

830-0232-xx Row Alarm Cable C–11

830-0233-xx Remote Maintenance Center Cable C–12

830-0257-xx Hazard Ground Cable C–13

830-0315-xx Power Cable C–14

830-0366-xx Interface Cable C–15

830-0421-xx CD ROM Cable C–16

830-0425-01 Adapter 15 Pin to 26 Pin C–17

830-0435-xx External Alarm Cable (Custom) C–18

830-0543-xx Alarm Holdover Clock Cable C–19

830-0527-xx RS232 ..... C–20

850-0514-01 Serial I/O Transition Card C–21

830-0531-03 Serial Interface Adapter/MODEM C–22

830-0531-01 Serial Interface Converter Cable.....C–23
830-0528-01 Terminal/Converter Cable.....C–24
830-0531-02 Serial Interface, Terminal and Printer Adapter.....C–25
830-0535-xx Terminal/Printer Cable.....C–26
830-0622-xx E1 Cable.....C–27
830-0624-xx BNC to BCN Cable Assembly,.....C–28
830-0625-xx BNC/Open End Cable.....C–29
830-0638-xx Filter Rack Alarm Cable.....C–30
830-0651-xx –48V Power Cable.....C–31
830-0656-01 Fifty Position Hard Drive I/O Cable.....C–33
830-0680-01 RJ-11 to RJ-11.....C–32
830-0708-xx MMI Port Cable.....C–34
830-0709-xx Modem/Terminal Cable.....C–35
830-0710-xx Network Cable.....C–36
830-0711-xx DCM, 100-BASE TX Interface.....C–37
830-0715-xx Ground Cable (2 Hole Lug).....C–38
830-0723-xx Crossover (CAT-5) Cable.....C–39
830-0724-xx Straight Trough Cable (CAT-5).....C–41
830-0759-xx Null Modem Cable.....C–42
830-0763-01 Loop Back Cable Adapter.....C–43
830-0772-xx Multi-Port LIM DS0 Cable.....C–44
830-0788-xx Straight Through, Patch Panel Cable.....C–45
830-0789-xx Crossover DCM Patch Panel Cable.....C–46
830-0814-xx Multi-Port Power Cable.....C–47
830-0822-01 Ground Cable.....C–48
830-0830-01 Ground Cable.....C–49
830-0846-01 High Speed Master Timing Adapter.....C–50
830-0849-xx DS1 Cable.....C–51
830-0859-xx Null-MODEM for Terminal.....C–52
830-0866-xx Breaker to Terminal Strip Power Cable.....C–53

830-0868-xx Power Cable C–54
830-0869-xx Router Power Cable C–55
830-0872-xx RAID Power Cable C–56
830-0892-xx Multi-Port DS0 Cable (24 AWG) C–57
830-0814-xx SXi Data Cable C–58
830-0857-01 HMUX Adapter Cable C–59
830-0884-01 Switch to Frame Ground Cable C–60
830-0888-xx RJ45/RJ45 Cable (Yellow) C–61
830-0889-xx RJ45/RJ45 (Blue) C–62
830-0894-xx T1 MIM LIM Cable C–63
830-0895-01 T1 LIM to MPL Cable Adapter C–64
830-0900-xx Alarm NETRA Server Cable C–65
830-0901-xx Tone and Announcement Server Alarm Cable C–66
830-0906-01 Serial IF Cable Rev A C–67
830-0907-xx Power Cable Rev A, ... C–68
830-0908-xx Power Ring C–69
830-0913-01 J1 Router Cable Rev B C–70
830-0913-02/03 Router Cable Rev B C–71
830-0917-01 RJ45 to 9 Pin, Adapter C–72
830-0948-xx E1/T1 MIM LIM Cable C–73
830-0949-xx E1/T1 MIM LIM to MPL Adapter C–74
830-0961-xx Serial Alarm Cable C–75
830-0963-xx DB9 F to DB15 M Serial Cable C–76
830-0965-xx Tekelec 1000 Power Cable C–77
830-0970-xx Null Modem Assembly Cable C–78
830-0972-01 Tekelec 1000 Serial DB44 to DB9 (X4) C–79
830-0959-01 ATM E1-T1 Cable C–80
830-0987-01 ATM E1-T1 Cable C–81
850-0496-01 Force Transition Card C–82
Fan Orientation Wiring Diagram Tekelec 1000 ..... C–83

Labeling

This section provides general labeling instructions for cables.

Cable Labeling

Before installing use this procedure to label the cables to ensure connection to the proper ports and ease of future maintenance.

Tools

- Installer's Cable Running List
- All cables listed in Installer's Cable Running List
- Any non-Tekelec cables
- Cable labels (including blank labels for non-Tekelec cables)
- Fine point marker

Procedure — Mark and Label Cables

1. Locate the Installer's Cable Running List in the *Equipment Specification* for the site. Refer to Figure C-1 for an example.

Figure C-1. Installer's Cable Running List Example

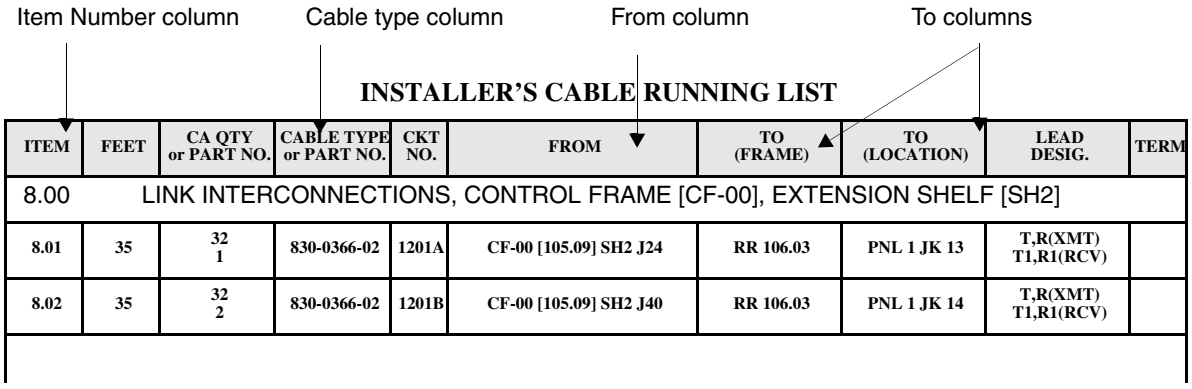

2. Locate the labels included with the cable shipment.

3. Take one cable and identify the cable's part number in the *Cable Type* column of the cable running list.

4. Match the cable with its corresponding pair of labels:

   a. Go to the cable's *From* column of the cable running list.

   b. Match the *From* column information to the *From* information on one label.

   c. Match the *From* column information to the *To* information on the other label.

   NOTE 1: The label for the connector end of these cables can be identified by the presence of a "J" number, for example: J32, that appears in the "From" area of the label.

   NOTE 2: Make sure that all cables specific to an A or B side are clearly labeled as A cable and B cable.

---

5. Repeat Step 4 for each cable to ensure that all labels are present and that originations and destinations of all cables are clearly identified.

---

6. For cables that come from the factory with connectors already installed, apply the appropriate label onto each end of the cable approximately two inches from the connector.

   NOTE: Ensure that the labels are positioned so they are still readable after the cables are installed.

---

7. For cables that need to be cut to the appropriate length:
   After the cable is cut to the appropriate length, affix labels with the item number approximately two inches from the end of the cable insulation.

---

8. For cables not ordered through Tekelec, confirm source, part number, and origination/destination points before labeling them.

NOTE: All cables must be labeled "TO" and "FROM"

After you have labeled all cables, you are ready for cable installation.

Introduction

The listing of all cables are in numerical order.

The words NOT TERMINATED or UNTERMINATED refers to the end of the cable that is not equipped with a connector in manufacturing and the wires must be cut, dressed, and connected at the site specific location.

NOTE: For EAGLE 5 SAS 28.2, from a hardware baseline perspective, there are no STC cards or MCPM cards; rather, there are DCM cards and DSM-2G cards. For EAGLE 5 SAS 28.2, DCM cards (P/N 870-1945-xx) will serve as STC cards, and DSM-2G cards (2 gigabytes of expansion memory - (P/N 870-2371-03) will serve as MCPM cards.

803-0029-01 MPL Card Diagnostic Cable

Diagnostic Cable (P/N 803-0029-01) provides a terminal interface for on board diagnostic tests of the Multi-Port Link Interface Module (MPL) card. The MPL card supports eight Digital Signal Level-0 (DS0) ports/links per module.

Figure C-2. MPL Card Diagnostic Cable (P/N 803-0029-01)

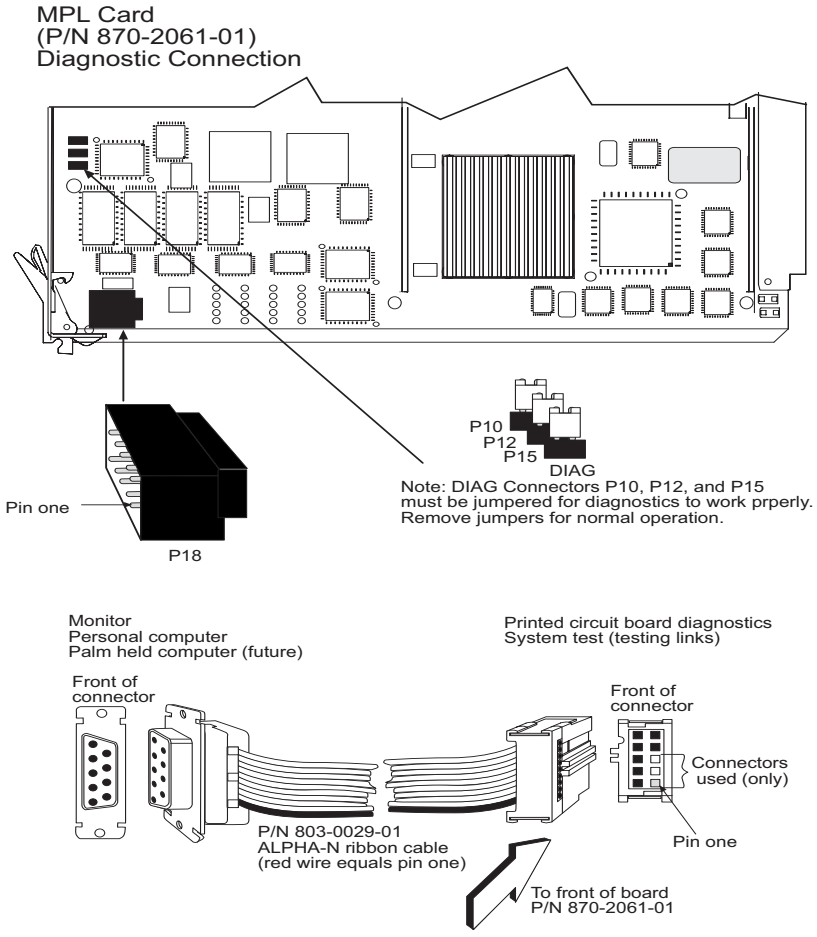

804-0176-01 Converter

This straight through converter is a purchased part. There is no illustration or wiring diagram. The part number is here for reference only.

804-1830-01 Coaxial Cable Adapter

BNC to M4 adapter used in site specific European and South American locations.

Figure C-3. Coaxial Cable Adapter P/N 804-1830-01

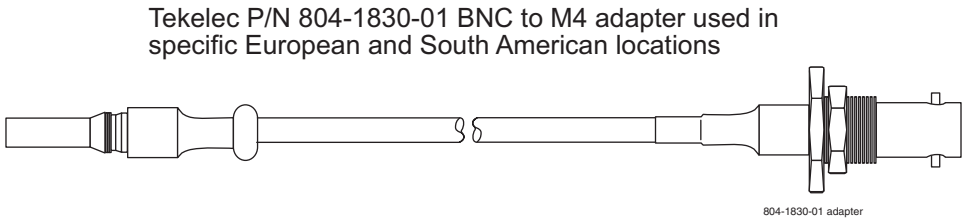

830-0224-xx Drive Power Cable

Figure C-4. Drive Power Cable P/N 830-0224-xx

PART NUMBERS	INCHES	CENTIMETERS
830-0224-01	4.50	11.41
830-0224-02	3.50	8.87

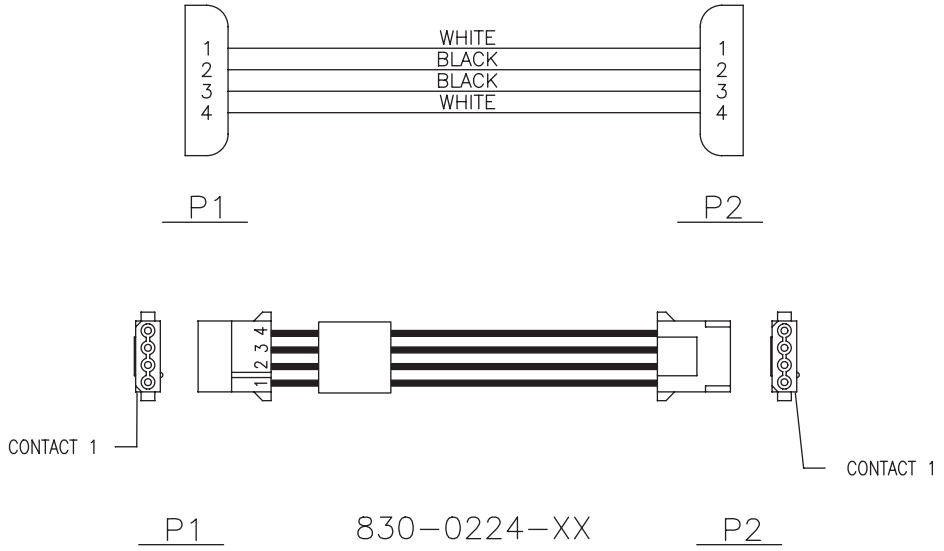

830-0231-xx Local Maintenance Center Cable

Table C-1. Local Maintenance Center Cable P/N 830-0231-xx

Part Number	Length (feet/meters)	Part Number	Length (feet/meters)
830-0231-01	50/15.25	830-0231-07	200/61.00
830-0231-02	75/22.88	830-0231-08	250/76.25
830-0231-03	100/30.50	830-0231-09	300/91.50
830-0231-04	125/38.13	830-0231-10	500/152.50
830-0231-05	150/45.75	830-0231-11	1000/305.00
830-0231-06	175/53.38		

Figure C-5. Local Maintenance Center Cable (P/N 830-0231-xx)

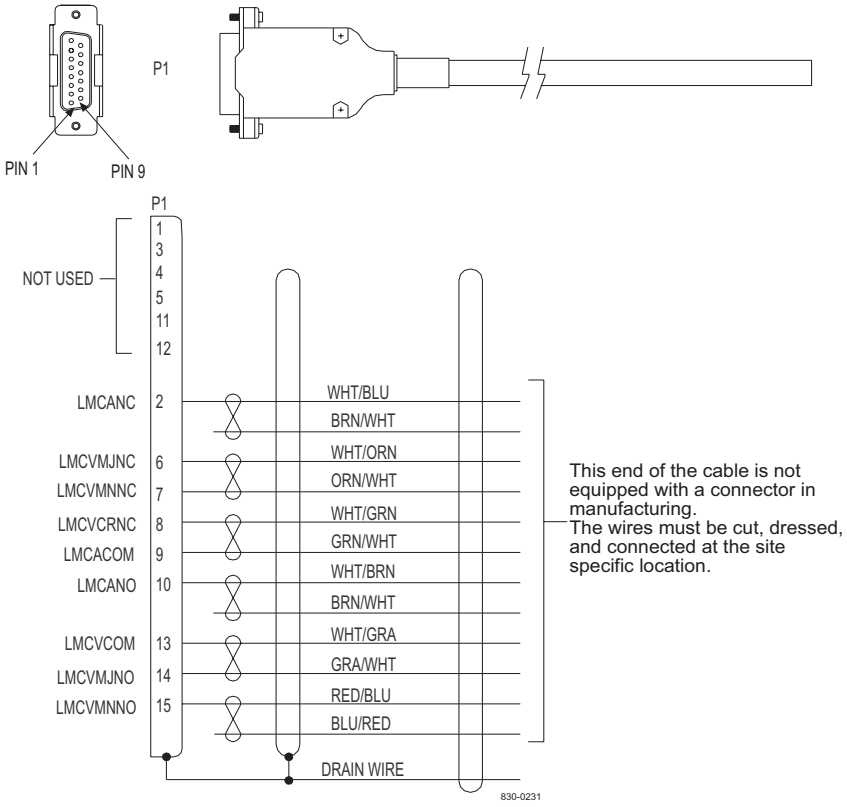

830-0232-xx Row Alarm Cable

Table C-2. Row Alarm Cable P/N 830-0232-xx

Part Number	Length feet	Length meters	Part Number	Length feet	Length meters
830-0232-01	5	1.53	830-0232-12	20	6.1
830-0232-02	8	2.44	830-0232-13	30	9.25
830-0232-03	10	3.05	830-0232-14	40	12.2
830-0232-04	12	3.66	830-0232-15	50	15.25
830-0232-05	14	4.27			

Figure C-6. Row Alarm Cable P/N 830-0232-xx

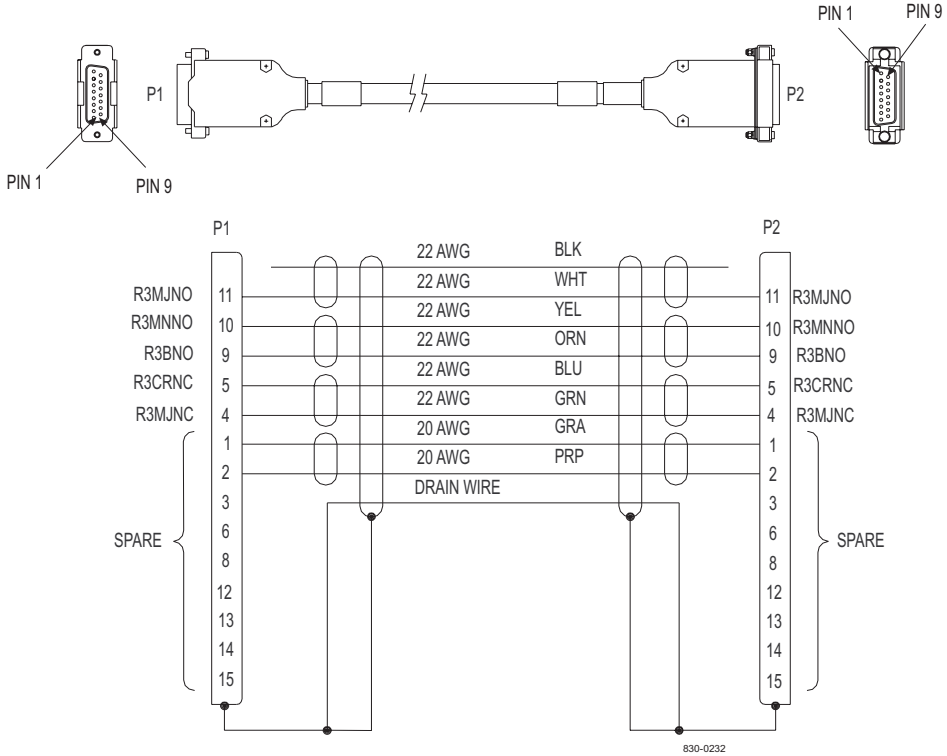

830-0233-xx Remote Maintenance Center Cable

For more connector information, refer to Appendix B, *Connectors*, *"Remote Maintenance Center Alarm Control Backplane"*.

Table C-3. Remote Maintenance Center Cable P/N 830-0233-xx

Part Number	Length feet	Length meters	Part Number	Length feet	Length meters
830-0233-01	50	15.25	830-0233-07	200	61.00
830-0233-02	75	22.88	830-0233-08	250	76.25
830-0233-03	100	30.50	830-0233-09	300	91.50
830-0233-04	125	38.13	830-0233-10	500	152.50
830-0233-05	150	45.75	830-0233-11	1000	305.00
830-0233-06	175	53.38			

Figure C-7. Remote Maintenance Center Cable P/N 830-0233-xx

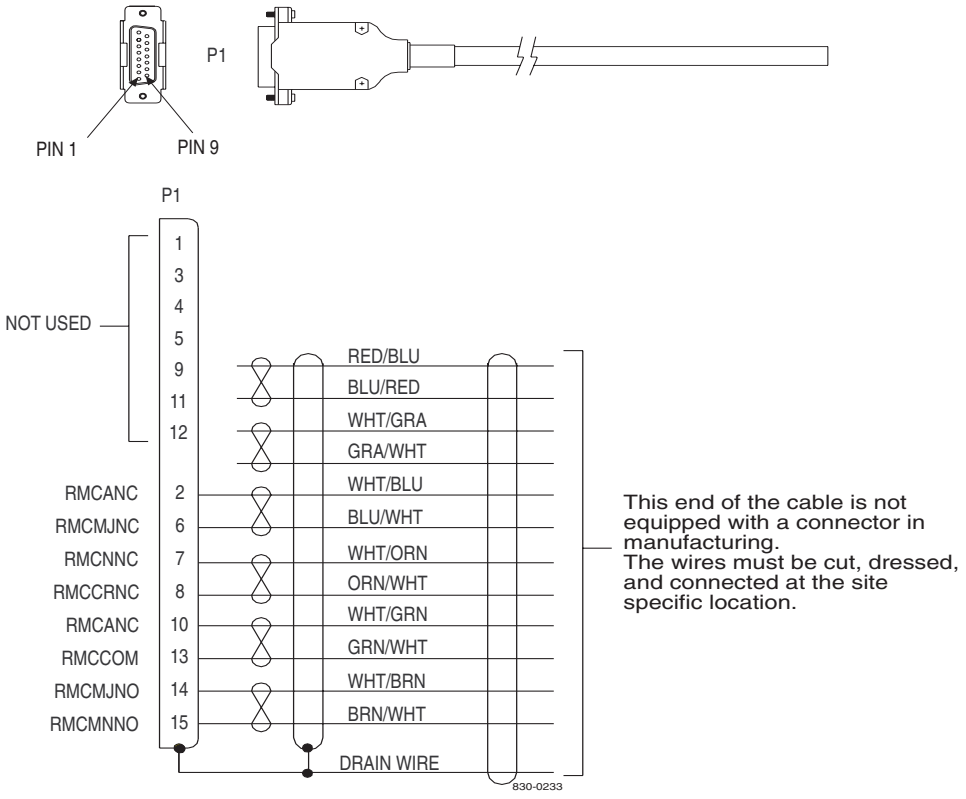

830-0257-xx Hazard Ground Cable

Table C-4. Hazard Ground Cable P/N 830-0257-xx

Part Number	Length inches	Length centimeters	Part Number	Length inches	Length centimeters
830-0257-01	15	38.1	830-0257-03	36	91.4
830-0257-02	24.75	62.9	830-0257-04	36	91.4

Figure C-8. Hazard Ground Cable P/N 830-0257-xx

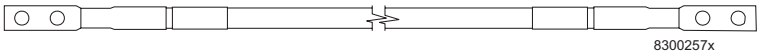

830-0315-xx Power Cable

Table C-5. Power Cable P/N 830-0315-xx

Part Number	Length feet	Length meters	Part Number	Length feet	Length meters
830-0315-01	4.0	1.07	830-0315-04	4.5	1.22
830-0315-02	6.0	1.07	830-0315-05	6.5	1.98
830-0315-03	8.0	2.29	830-0315-06	8.5	2.58

Figure C-9. Power Cable (P/N 830-0315-xx)

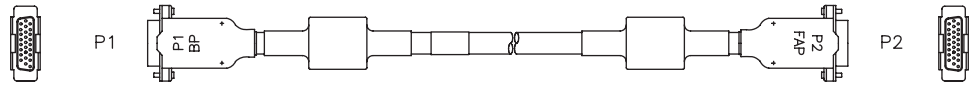

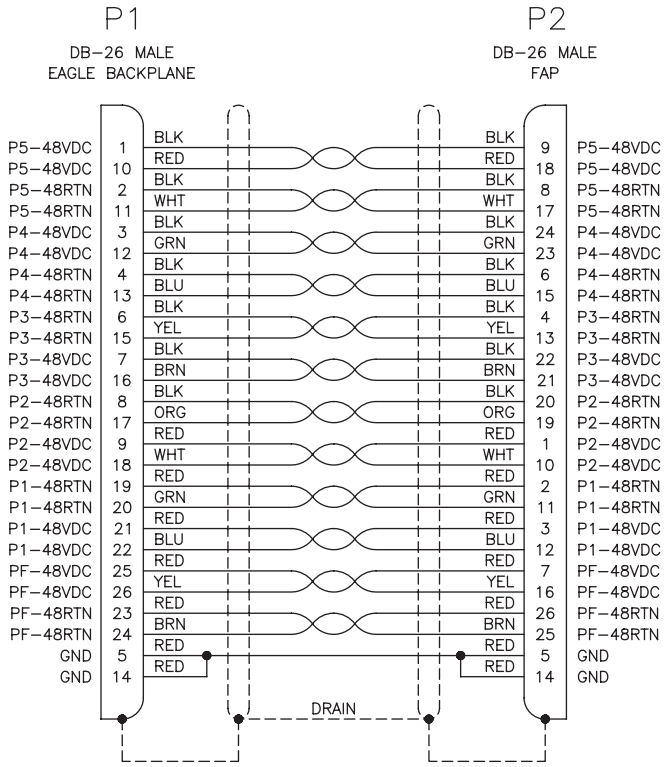

WIRING DIAGRAM

830-0366-xx Interface Cable

Table C-6. Interface Cable P/N 830-0366-xx

Part Number	Length feet	Length meters	Part Number	Length feet	Length meters
830-0366-01	25	7.63	830-0366-09	200	61.00
830-0366-02	35	10.68	830-0366-10	250	76.25
830-0366-03	50	15.25	830-0366-11	300	91.50
830-0366-04	75	22.88	830-0366-12	500	152.50
830-0366-05	100	30.50	830-0366-13	1000	305.00
830-0366-06	125	38.13	830-0366-14	15	4.58
830-0366-07	150	45.75	830-0366-15	20	6.10
830-0366-08	175	53.38	830-0366-16	30	9.15

Figure C-10. Interface Cable P/N 830-0366-xx

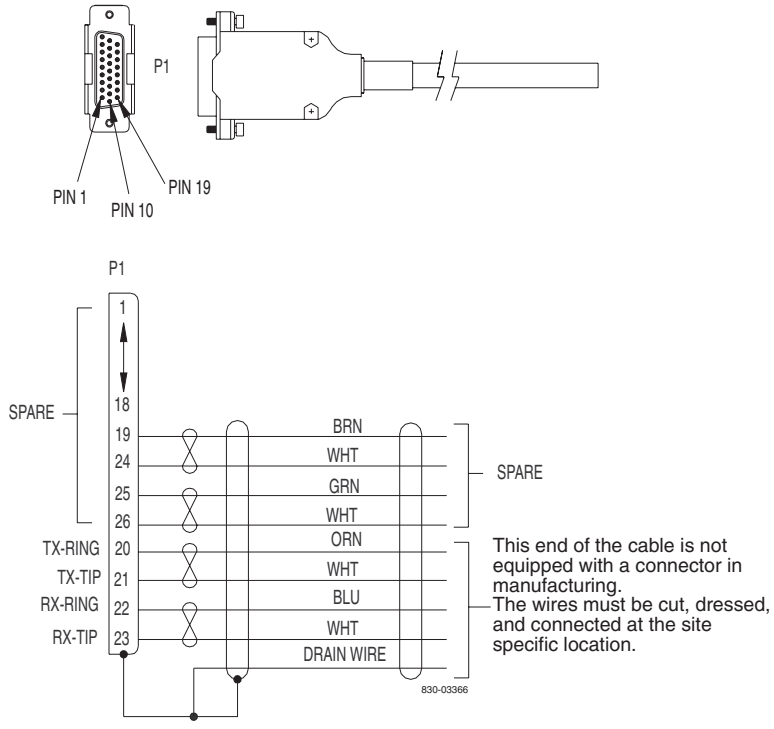

830-0421-xx CD ROM Cable

Figure C-11. CD ROM Cable P/N 830-0421-xx

PART NUMBER	LENGTH	
	INCHES	CENTIMETERS
830-0421-01	3.50	8.87
830-0421-02	2.50	6.33

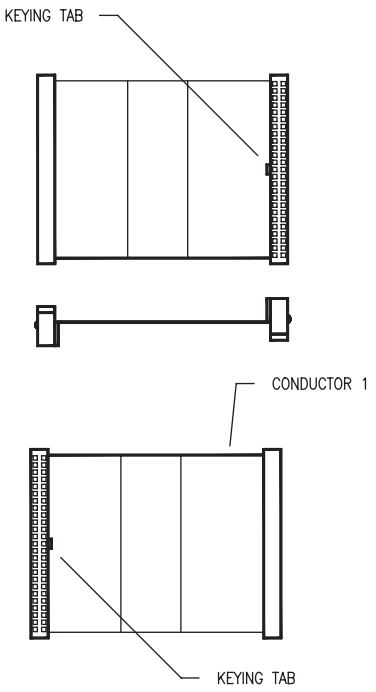

830-0425-01 Adapter 15 Pin to 26 Pin

Figure C-12. Adapter 15 Pin to 26 Pin P/N 830-0425-01

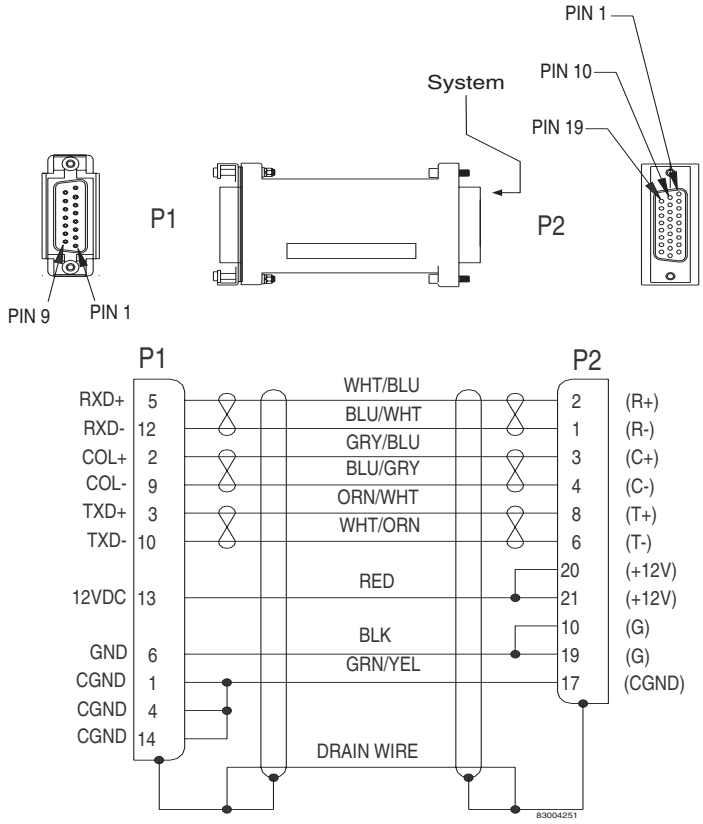

830-0435-xx External Alarm Cable (Custom)

Figure C-13. External Alarm Cable (Custom) P/N 830-0435-xx

PART NUMBER	FEET	METERS
830–0435–01	50	15.24
830–0435–02	75	22.86
830–0435–03	100	30.48
830–0435–04	125	38.10
830–0435–05	150	45.72
830–0435–06	175	53.34
830–0435–07	200	60.96
830–0435–08	250	76.20
830–0435–09	300	91.40
830–0435–10	500	152.40
830–0435–11	1000	304.80

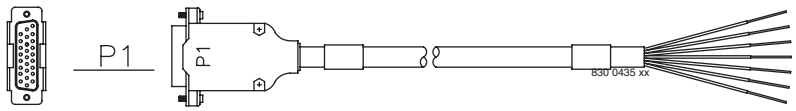

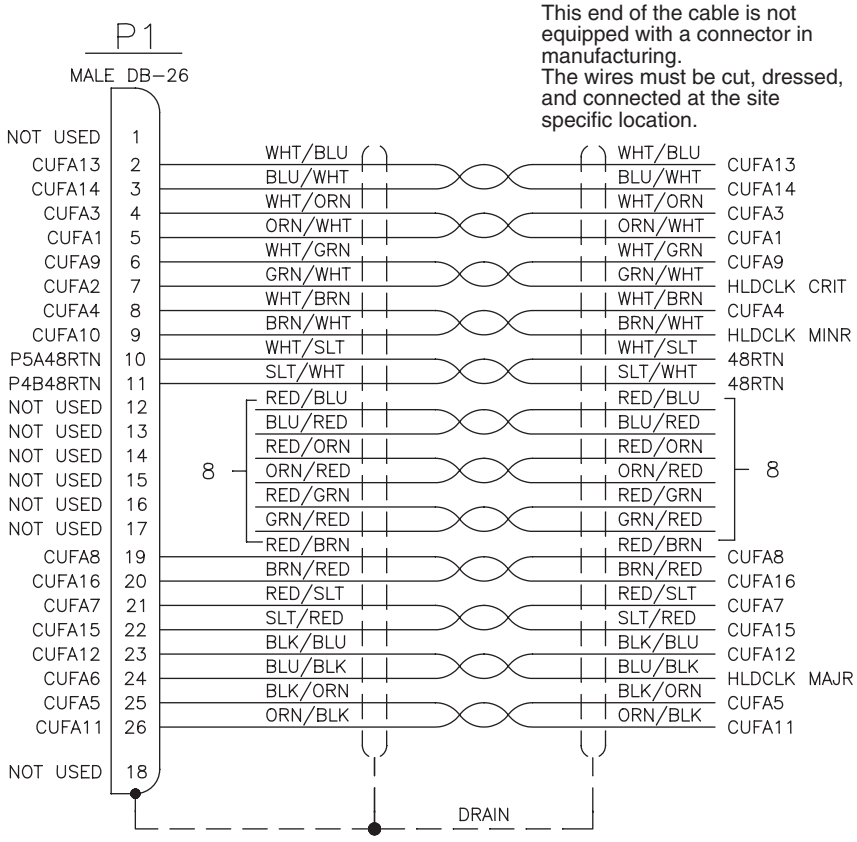

830-0543-xx Alarm Holdover Clock Cable

For more connector information, refer to Appendix B, *Connectors*

Figure C-14. Alarm Holdover Clock Cable P/N 830-0543-xx

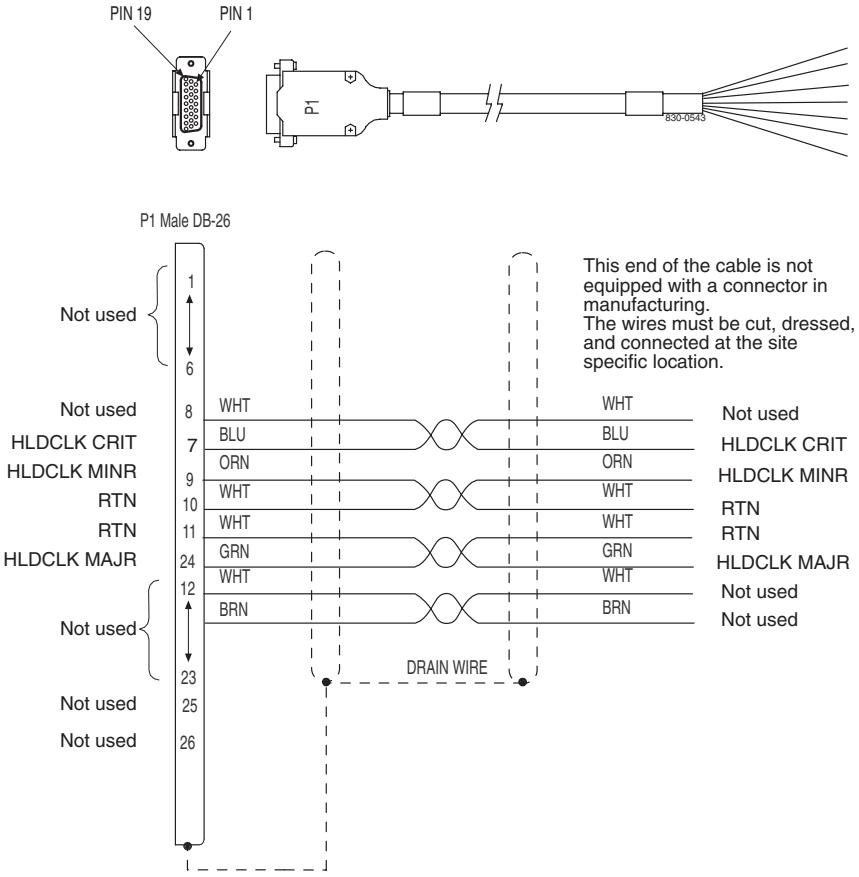

CUST ALM 1 cable (P/N 830-0543-01) connects directly to the Holdover clock. (CUST ALM 2 is not software supported at this time) Cable (P/N 830-0435-xx) is an optional cable that may go from the CUST ALM 1.

830-0527-xx RS232

Standard Purchased part. Serial port connected to an optional second asynchronous maintenance modem and connections between the TTYA and a VT-520 terminal.

Table C-7. RS232 P/N 830-0527-xx

Part Number	Length feet	Length meters
830-0527-01	15	4.57
830-0527-02	25	7.62
830-0527-03	50	15.24
830-0527-04	75	22.86
830-0527-05	100	30.48
8300527-06	125	38.10
830-0527-07	150	45.72

Figure C-15. RS232 P/N 830-0527-xx

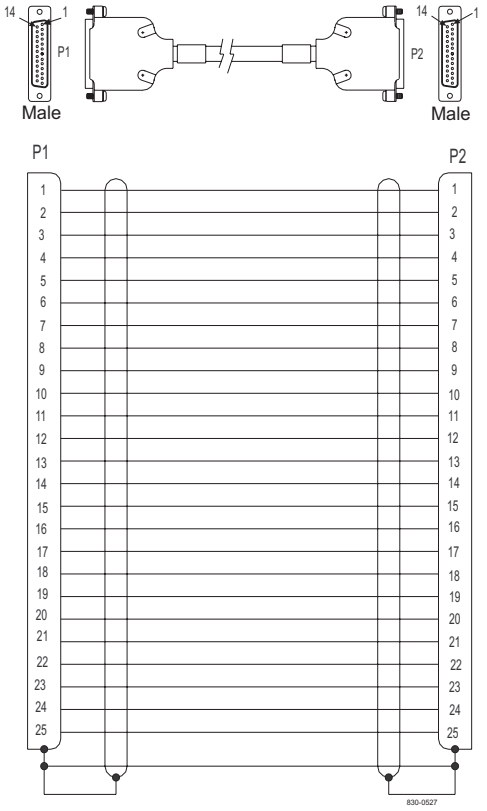

850-0514-01 Serial I/O Transition Card

Figure C-16. Serial I/O Transition Card P/N 850-0514-01

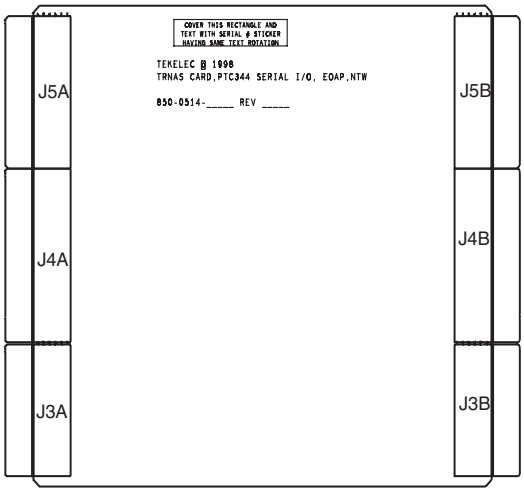

830-0531-03 Serial Interface Adapter/MODEM

Figure C-17. Serial Interface Adapter/MODEM P/N 830-0531-03

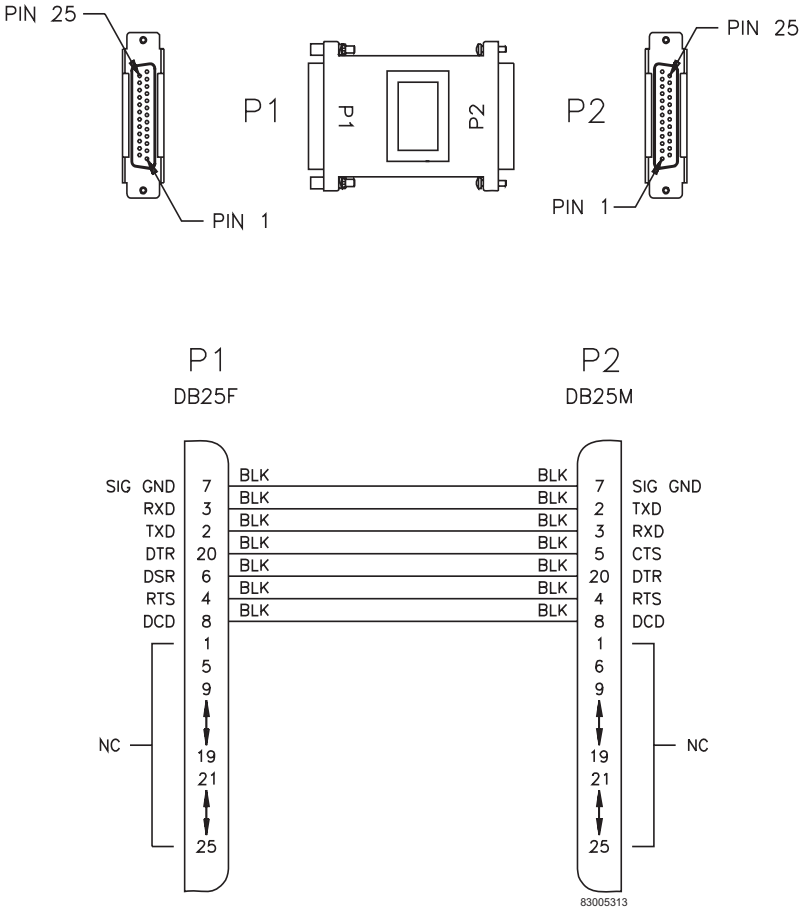

830-0531-01 Serial Interface Converter Cable

Figure C-18. Serial Interface Converter Cable P/N 830-0531-01

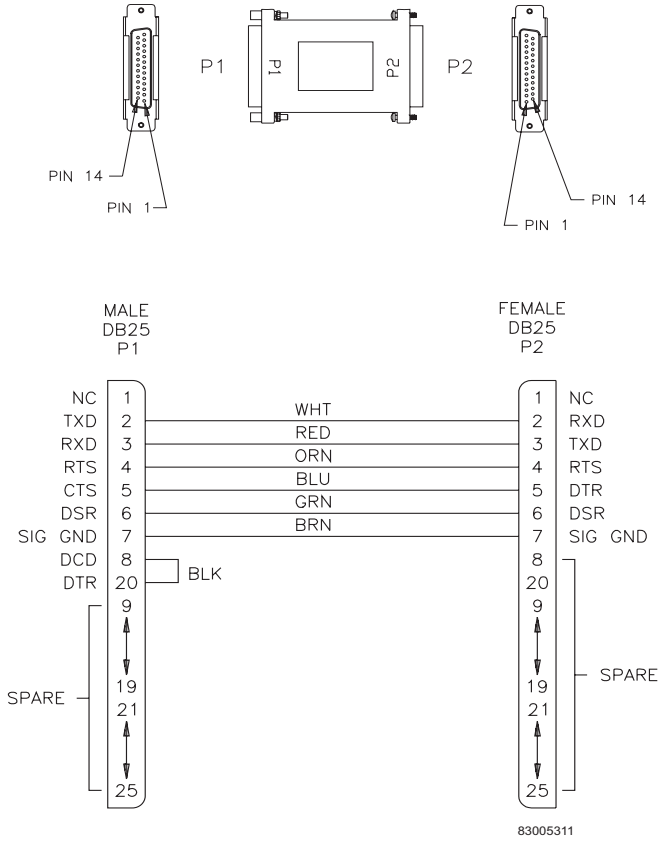

830-0528-01 Terminal/Converter Cable

This converter is a purchased part and the pin out is that of a straight through converter. There is no illustration or wiring diagram. The part number is here for reference.

830-0531-02 Serial Interface, Terminal and Printer Adapter

Figure C-19. Serial Interface, Adapter P/N 830-0531-02

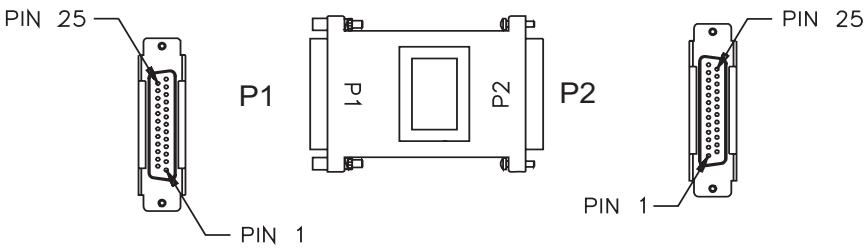

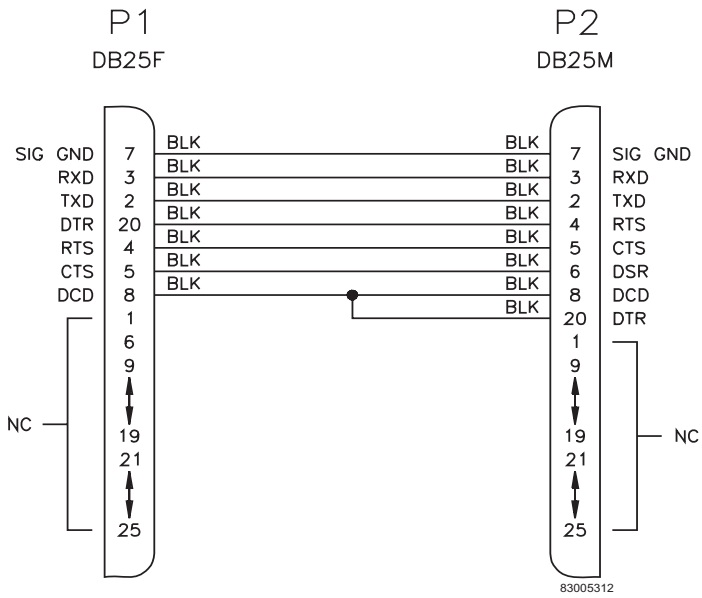

830-0535-xx Terminal/Printer Cable

Figure C-20. Terminal/Printer Cable P/N 830-0535-xx

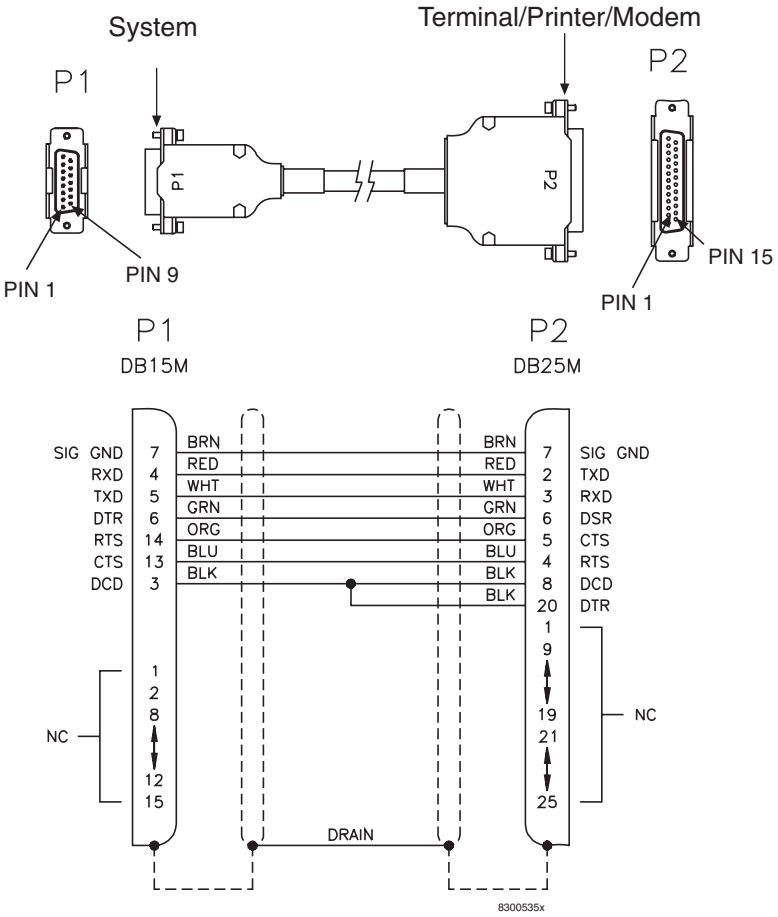

830-0622-xx E1 Cable

Figure C-21. E 1 Cable P/N 830-0622-xx

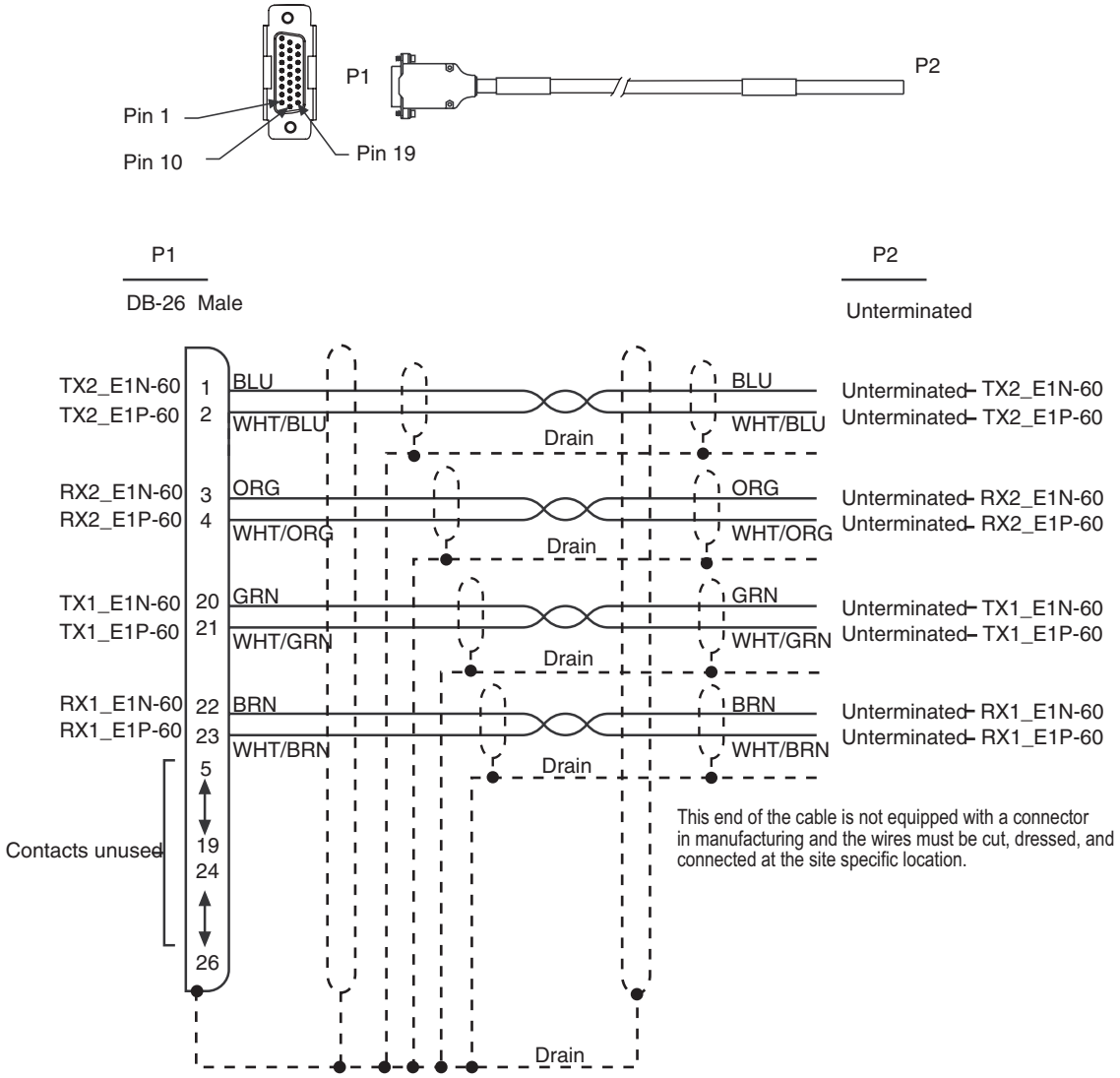

830-0624-xx BNC to BCN Cable Assembly,

Figure C-22. Cable Assembly, BNC to BCN P/N 830-0624-xx

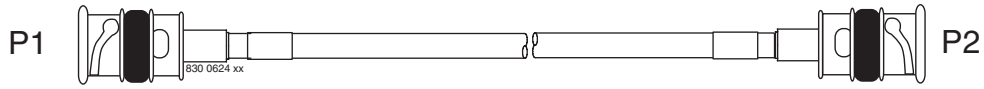

830-0625-xx BNC/Open End Cable

.

Table C-8. BNC to Open End P/N 830-0625-xx

Part Number	Length feet	Length meters
830-0625-01	15	4.57
830-0625-02	25	7.62
830-0625-03	50	15.24
830-0625-04	75	22.86
830-0625-05	100	30.48
830-0625-06	125	38.10
830-0625-07	150	45.72
830-0625-08	175	53.34
830-0625-09	200	60.96
830-0625-10	250	76.2
830-0625-11	300	91.44
830-0625-12	500	152.4
830-0625-13	1000	304.8

Figure C-23. BNC/Open End Cable P/N 830-0625-xx

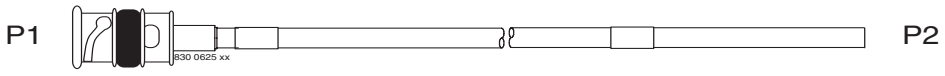

830-0638-xx Filter Rack Alarm Cable

Figure C-24. Filter Rack Alarm Cable P/N 830-0638-xx

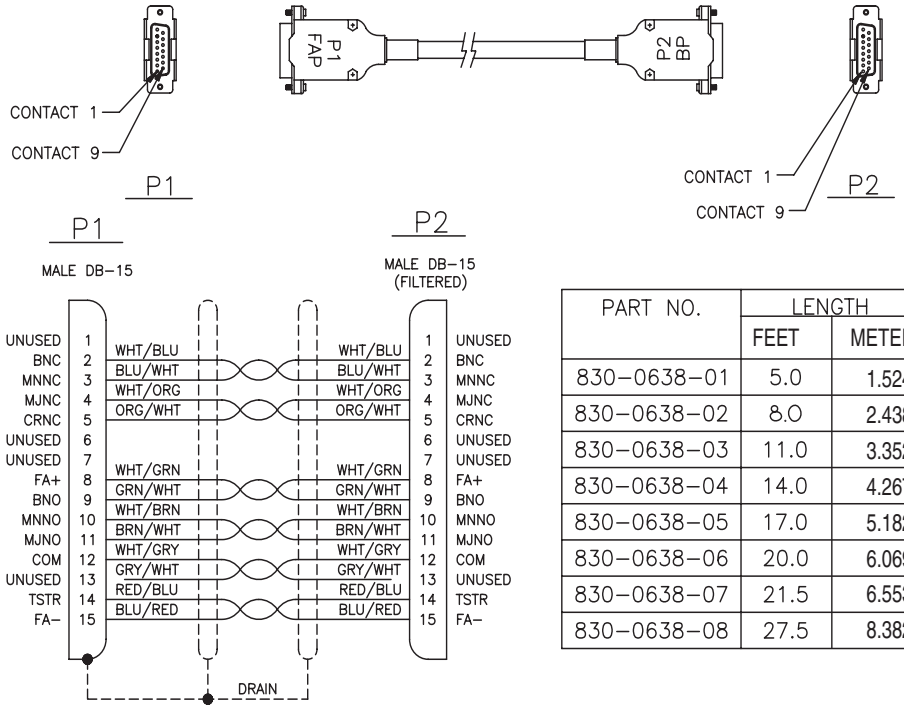

PART NO.	LENGTH	
	FEET	METERS
830-0638-01	5.0	1.524
830-0638-02	8.0	2.438
830-0638-03	11.0	3.352
830-0638-04	14.0	4.267
830-0638-05	17.0	5.182
830-0638-06	20.0	6.069
830-0638-07	21.5	6.553
830-0638-08	27.5	8.382

830-0651-xx –48V Power Cable

Figure C-25. –48V Power Cable P/N 830-0651-01

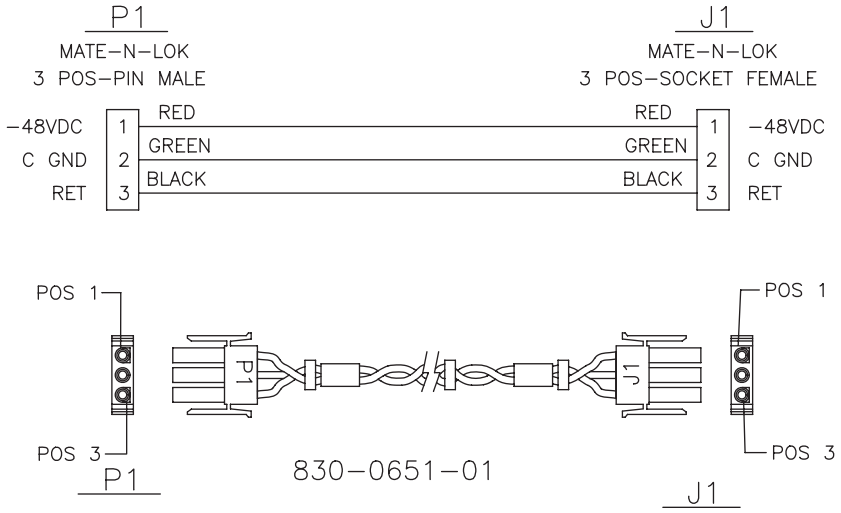

830-0680-01 RJ-11 to RJ-11

Figure C-26. RJ-11 to RJ-11 P/N 830-0680-01

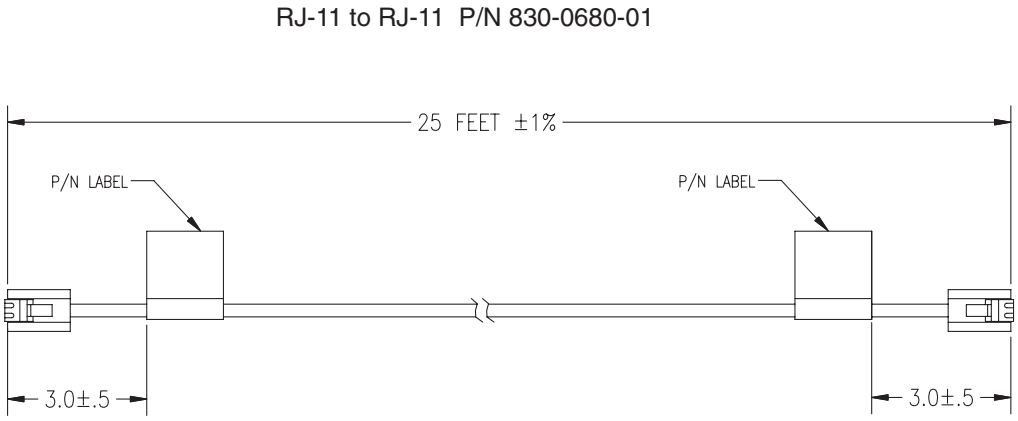

830-0656-01 Fifty Position Hard Drive I/O Cable

Figure C-27. Fifty Position/Hard Drive IO P/N 830-0656-01

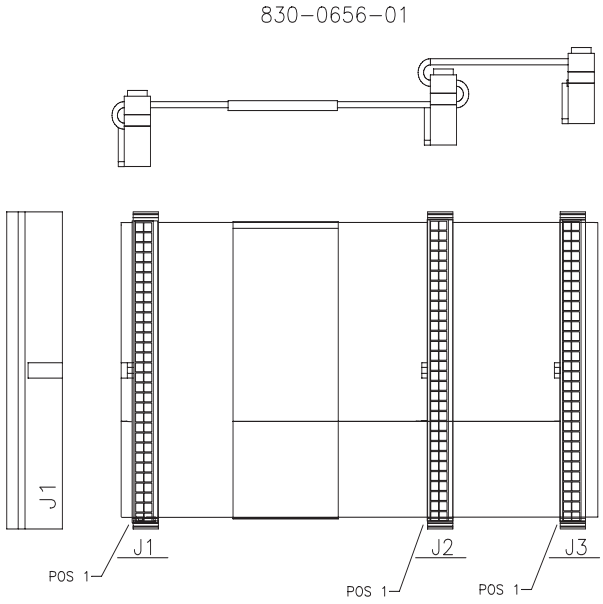

830-0708-xx MMI Port Cable

Table C-9. MMI Port Cable P/N 830-0708-xx

Part Numbers	Feet	Meters	Part Numbers	Feet	Meters
830-0708-01	25	7.62	830-0708-14	350	106.68
830-0708-02	15	4.57	830-0708-15	400	121.92
830-0708-03	50	15.24	830-0708-16	450	137.16
830-0708-04	75	22.86	830-0708-17	550	167.64
830-0708-05	100	30.48	830-0708-18	600	182.88
830-0708-06	125	38.10	830-0708-19	650	198.12
830-0708-07	150	45.72	830-0708-20	700	213.36
830-0708-08	175	53.34	830-0708-21	750	228.60
830-0708-09	200	60.96	830-0708-22	800	243.84
830-0708-10	250	76.20	830-0708-23	850	259.08
830-0708-11	300	91.40	830-0708-24	900	274.32
830-0708-12	500	152.40	830-0708-25	950	289.56
830-0708-13	1000	304.80			

Figure C-28. Man-Machine Interface Port Cable P/N 830-0708-01

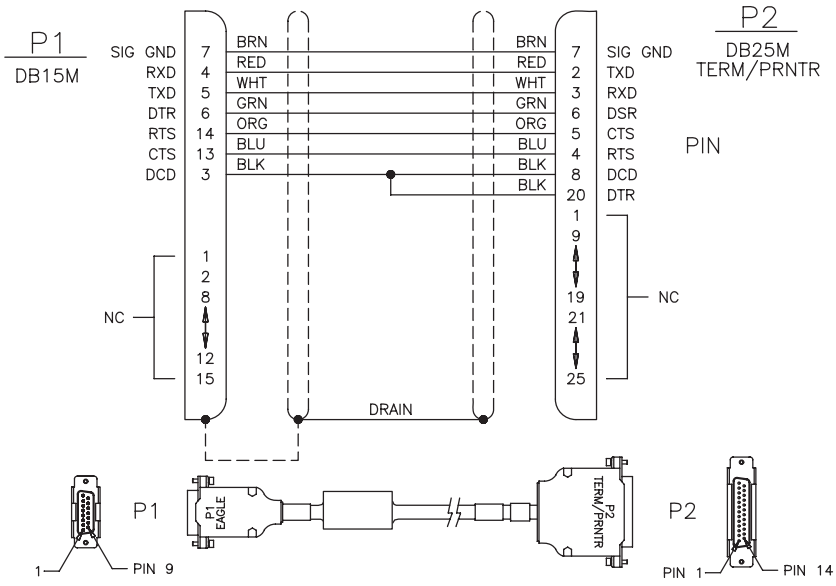

830-0709-xx Modem/Terminal Cable

Figure C-29. Modem/Terminal Cable P/N 830-0709-xx

PART NUMBER	LENGTH	
	INCHES	CENTIMETERS
830–0709–01	180.0 ± 1.8	457.2
830–0709–02	300.0 ± 3.0	762.0
830–0709–03	600.0 ± 6.0	1524.0
830–0709–04	900.0 ± 9.0	2286.0
830–0709–05	1200.0 ± 12.0	3048.0
830–0709–06	1500.0 ± 15.0	3810.0
830–0709–07	1800.0 ± 18.0	4572.0

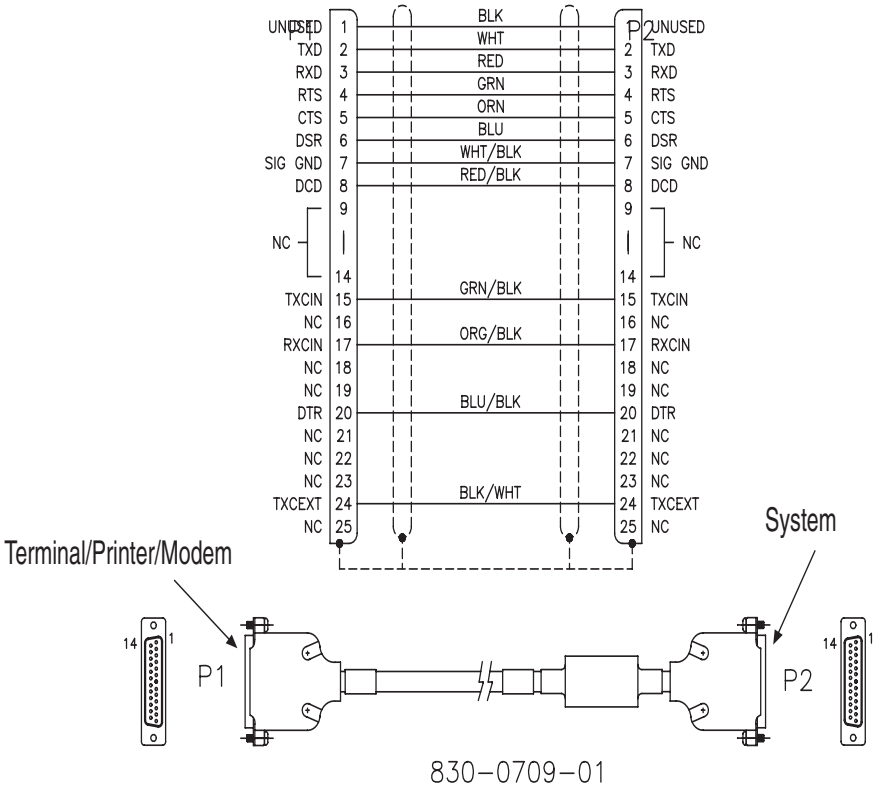

830-0710-xx Network Cable

Figure C-30. Network Cable P/N 830-0710-xx

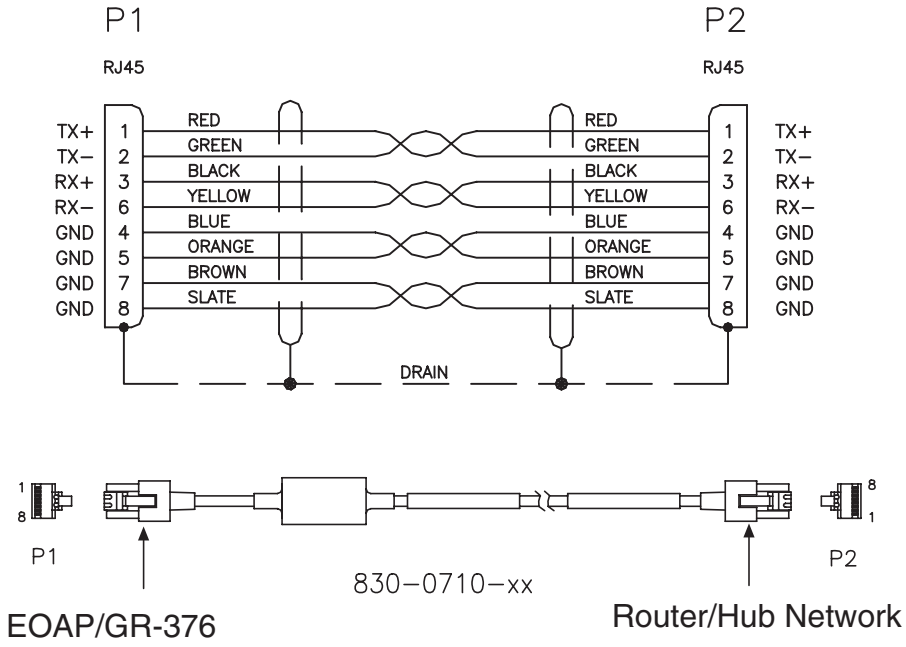

830-0711-xx DCM, 100-BASE TX Interface

Figure C-31. DCM, 100-BASE TX Interface P/N 830-0711-xx

NUMBER	LENGTH FEET	METERS
830–0711–01	15	4.57
830–0711–02	25	7.62
830–0711–03	35	10.66
830–0711–04	50	15.24
830–0711–05	75	22.86
830–0711–06	100	30.48
830–0711–07	150	45.72
830–0711–08	200	60.96
830–0711–09	250	76.2
830–0711–10	328	99.99

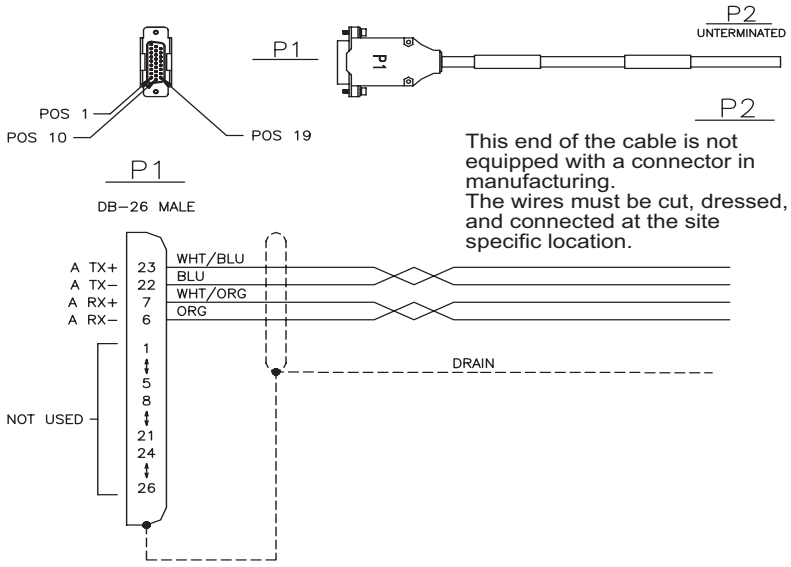

830-0715-xx Ground Cable (2 Hole Lug)

Figure C-32. Ground Cable P/N 830-0715-xx

NUMBER	LENGTH "L" ± .50"	GAUGE	REVISION LEVEL
–01	36.00	6 AWG	A1
–02	36.00	2 AWG	A

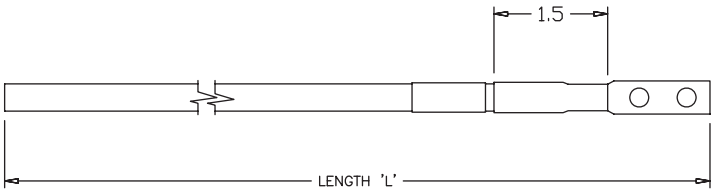

830-0715-XX

830-0723-xx Crossover (CAT-5) Cable

Figure C-33. Crossover (CAT-5) Cable P/N 830-0723-xx

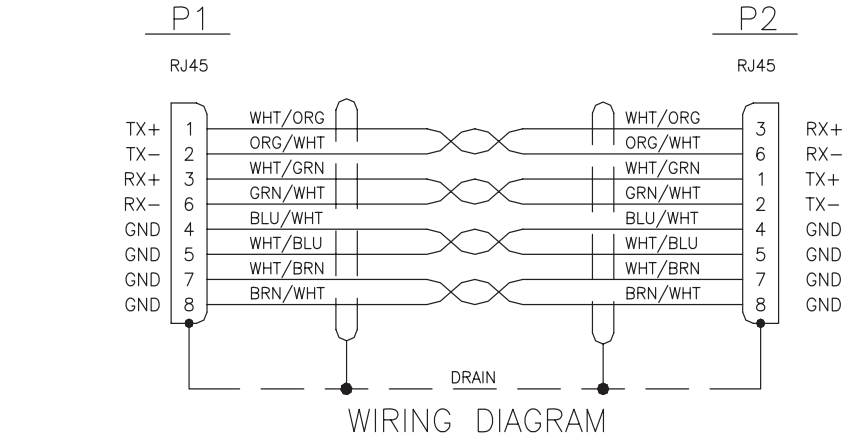

PART NO.	LENGTH METERS	FEET
830−0723−01	.30	1
830−0723−02	.90	3
830−0723−03	1.37	4.5

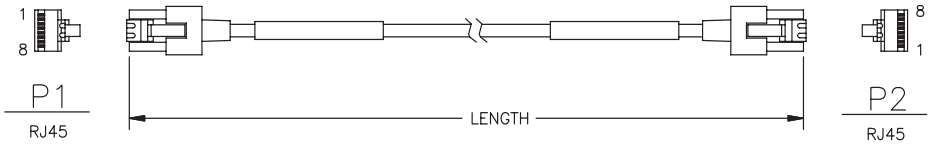

CAT-5 CROSSOVER CABLE ASSEMBLY 830-0723-XX

830-0724-xx Data Cable (SXi rev D)

Figure C-34. SX*i* Data Cable P/N 830-0724-xx rev D

PART NO.	LENGTH (FT)	REVISION LEVEL
830-0724-01	(5.0)	D
830-0724-02	(10.0)	D
830-0724-03	(15.0)	D
830-0724-04	(25.0)	D
830-0724-05	(1.0)	D
830-0724-06	(6.0)	D
830-0724-07	(7.0)	D
830-0724-08	(1.6)	D
830-0724-09	(50.0)	D
830-0724-10	(100.0)	D
830-0724-11	(30.0)	A
830-0724-12	(35.0)	A
830-0724-13	(40.0)	A
830-0724-14	(45.0)	A
830-0724-15	(55.0)	A
830-0724-16	(60.0)	A
830-0724-17	(65.0)	A
830-0724-18	(70.0)	A
830-0724-19	(75.0)	A
830-0724-20	(80.0)	A
830-0724-21	(85.0)	A
830-0724-22	(90.0)	A
830-0724-23	(95.0)	A
830-0724-24	(105.0)	A
830-0724-25	(110.0)	A
830-0724-26	(115.0)	A
830-0724-27	(120.0)	A
830-0724-28	(125.0)	A
830-0724-29	(130.0)	A
830-0724-30	(135.0)	A
830-0724-31	(140.0)	A
830-0724-32	(145.0)	A
830-0724-33	(150.0)	A

PART NO.	LENGTH (FT)	REVISION LEVEL
830-0724-34	(155.0)	A
830-0724-35	(160.0)	A
830-0724-36	(165.0)	A
830-0724-37	(170.0)	A
830-0724-38	(175.0)	A
830-0724-39	(180.0)	A
830-0724-40	(185.0)	A
830-0724-41	(190.0)	A
830-0724-42	(195.0)	A
830-0724-43	(200.0)	A
830-0724-44	(205.0)	A
830-0724-45	(210.0)	A
830-0724-46	(215.0)	A
830-0724-47	(220.0)	A
830-0724-48	(225.0)	A
830-0724-49	(230.0)	A
830-0724-50	(235.0)	A
830-0724-51	(240.0)	A
830-0724-52	(245.0)	A
830-0724-53	(250.0)	A
830-0724-54	(255.0)	A
830-0724-55	(260.0)	A
830-0724-56	(265.0)	A
830-0724-57	(270.0)	A
830-0724-58	(275.0)	A
830-0724-59	(280.0)	A
830-0724-60	(285.0)	A
830-0724-61	(290.0)	A
830-0724-62	(295.0)	A
830-0724-63	(300.0)	A
830-0724-64	(20.0)	A

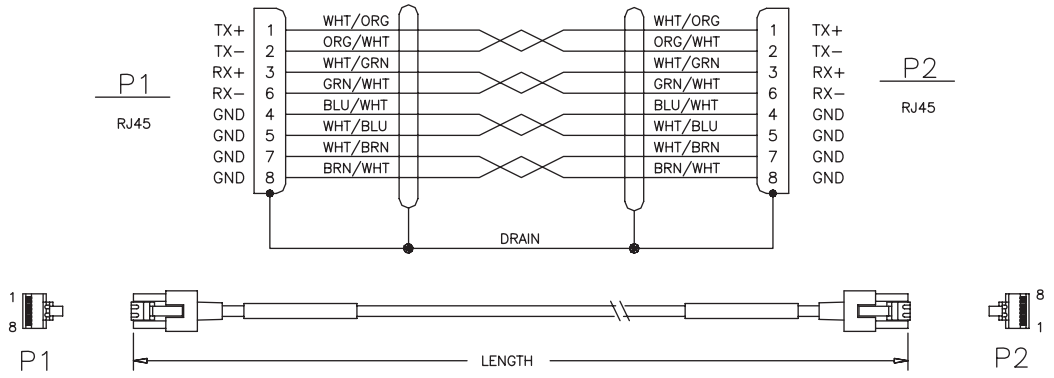

830-0724-xx Straight Trough Cable (CAT-5)

Figure C-35. Straight Through (CAT-5)(P/N 830-0724-xx)

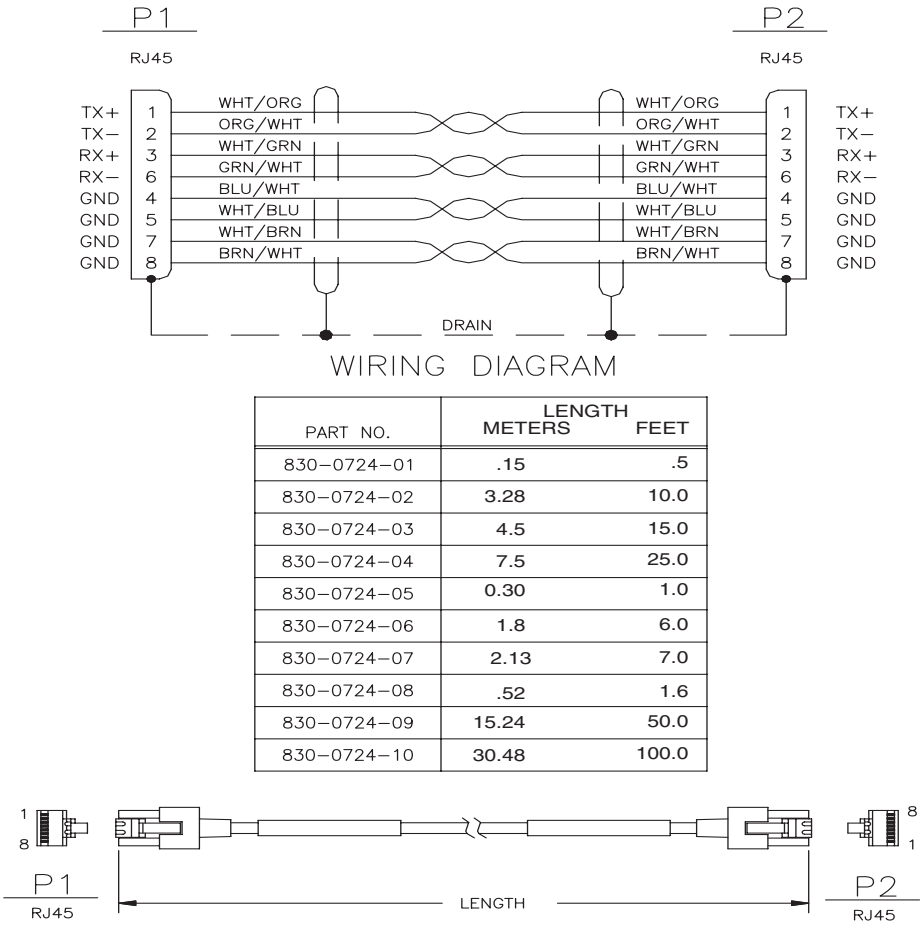

PART NO.	LENGTH METERS	FEET
830−0724−01	.15	.5
830−0724−02	3.28	10.0
830−0724−03	4.5	15.0
830−0724−04	7.5	25.0
830−0724−05	0.30	1.0
830−0724−06	1.8	6.0
830−0724−07	2.13	7.0
830−0724−08	.52	1.6
830−0724−09	15.24	50.0
830−0724−10	30.48	100.0

CAT-5 STRAIGHT THOUGH CABLE ASSEMBLY

830-0724-XX

830-0759-xx Null Modem Cable

Figure C-36. Null Modem Cable P/N 830-0759-xx

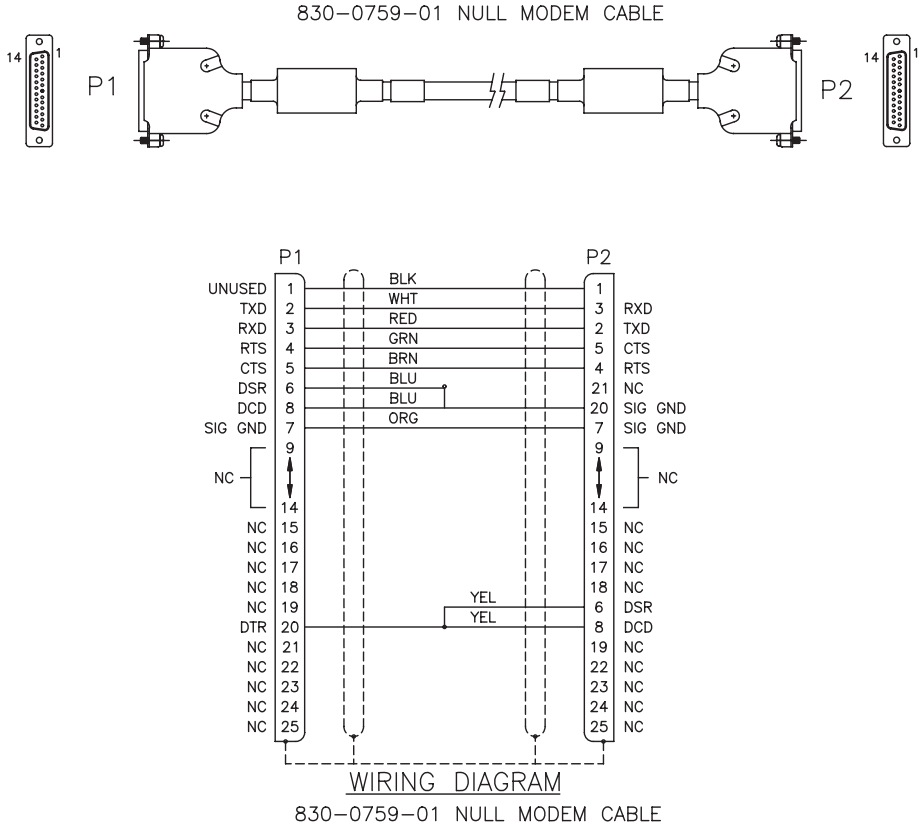

830-0763-01 Loop Back Cable Adapter

Figure C-37. Loop Back Cable Adapter P/N 830-0763-01

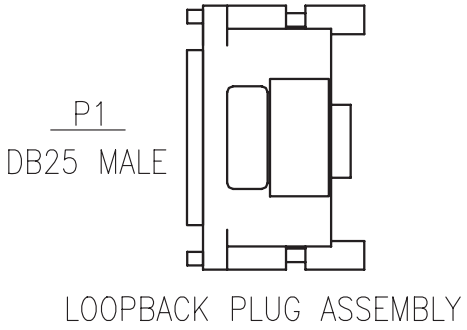

830-0772-xx Multi-Port LIM DS0 Cable

830-0772-xx Multi-Port LIM DS0 (26 AWG)

Figure C-38. Multi-Port LIM DS0 Cable P/N 830-0772-xx

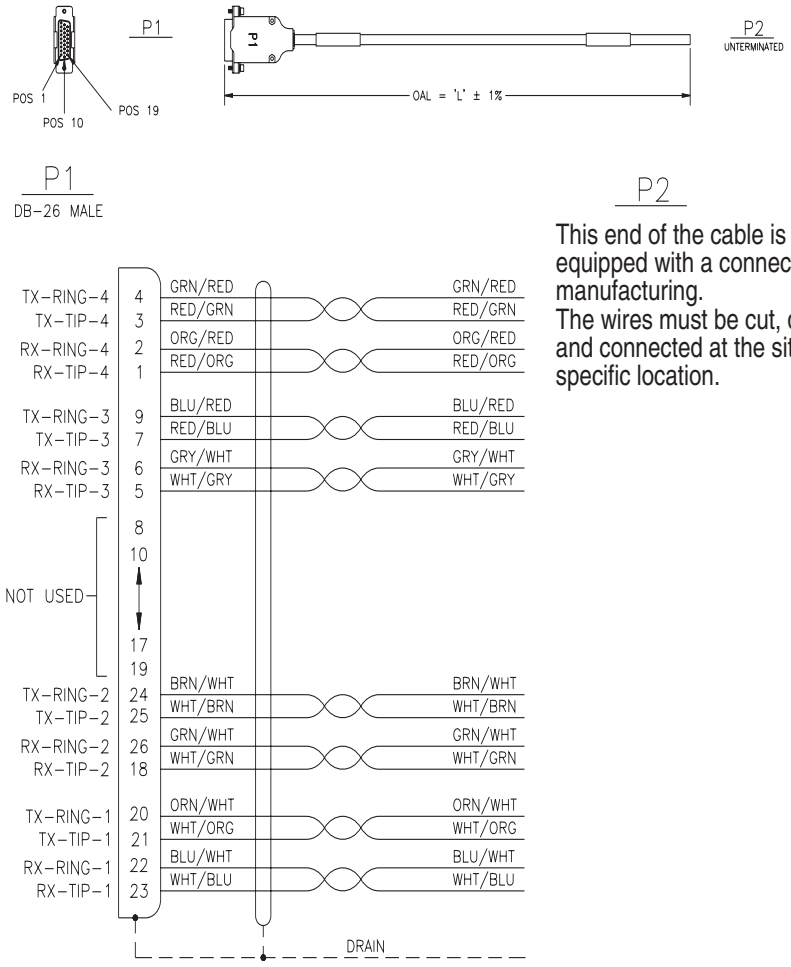

830-0788-xx Straight Through, Patch Panel Cable

830-0788-xx Router, Hub, Network GR-376 Cable

Router/Hub/Network/GR-376 straight through cable to system.

Figure C-39. Straight Through patch panel cable P/N 830-0788-xx

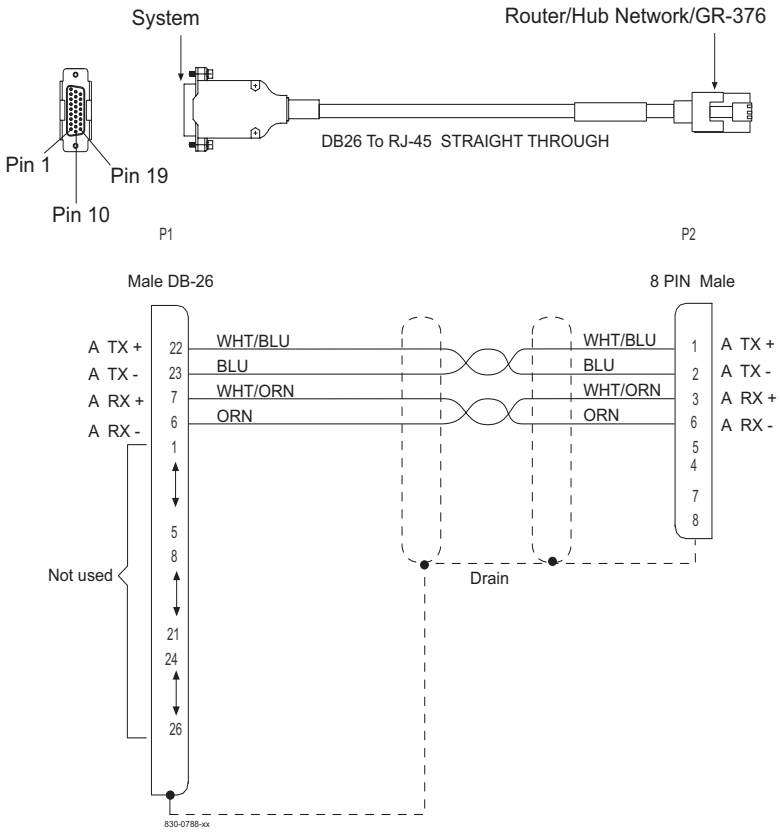

830-0789-xx Crossover DCM Patch Panel Cable

830-0788-xx Router, Hub, Network GR-376 Cable

830-0789-xx Patch Panel Crossover Cable, DCM

Table C-10. Patch Panel Crossover P/N 830-0789-xx

Part Number	Length feet	Length meters	Part Number	Length feet	Length meters
830-0789-01	15	4.57	830-0789-06	100	30.50
830-0789-02	25	7.62	830-0789-07	150	45.75
830-0789-03	35	10.67	830-0789-08	200	60.10
830-0789-04	50	15.25	830-0789-09	250	76.25
830-0789-05	75	45.75	830-0789-10	328	107.54

Figure C-40. Patch Panel Crossover Cable (P/N 830-0789-xx)

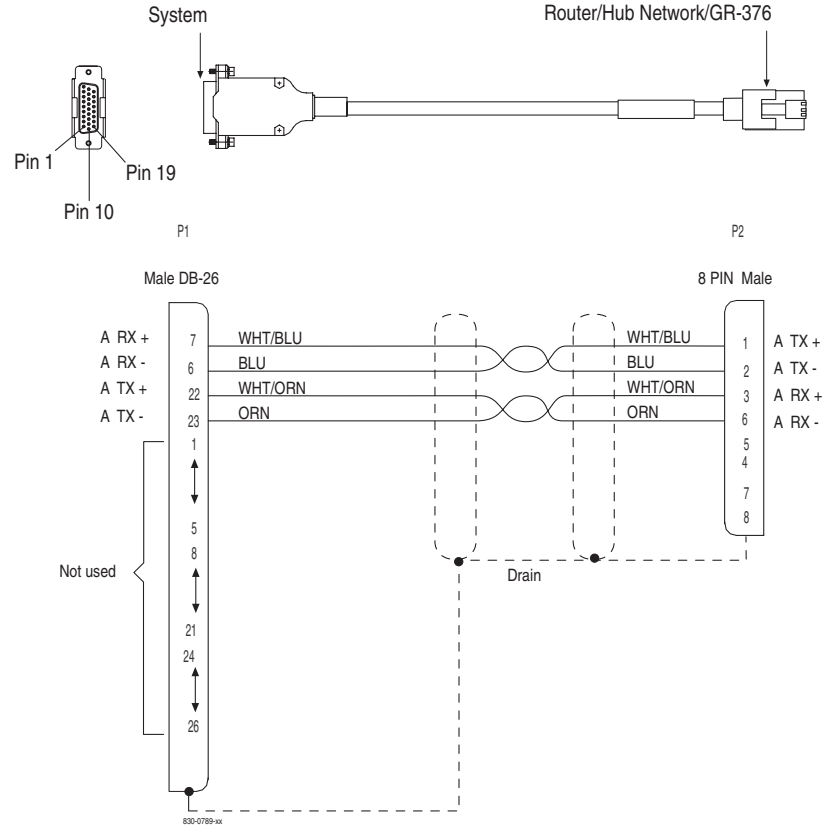

830-0814-xx Multi-Port Power Cable

Figure C-41. Multi-Port Power Cable P/N 830-0814-xx

DASH NUMBER	LENGTH (IN)±1%	X (IN)±.12	LABEL "A" USAGE	LABEL "B" USAGE
−01	64.0	6.0	TB1, POS 1&4	SERVER B, PS1B
−02	70.5	6.5	TB1, POS 2&5	SERVER B, PS2B
−03	77.0	7.0	TB1, POS 3&6	SERVER B, PS3B
−04	64.0	6.0	TB4, POS 1&4	SERVER B, PS3A
−05	70.5	6.5	TB4, POS 2&5	SERVER B, PS2A
−06	77.0	7.0	TB4, POS 3&6	SERVER B, PS1A
−07	44.5	11.5	TB2, POS 1&4	SERVER A, PS1B
−08	51.0	12.0	TB2, POS 2&5	SERVER A, PS2B
−09	57.5	12.5	TB2, POS 3&6	SERVER A, PS3B
−10	44.5	11.5	TB3, POS 1&4	SERVER A, PS3A
−11	51.0	12.0	TB3, POS 2&5	SERVER A, PS2A
−12	57.5	12.5	TB3, POS 3&6	SERVER A, PS1A

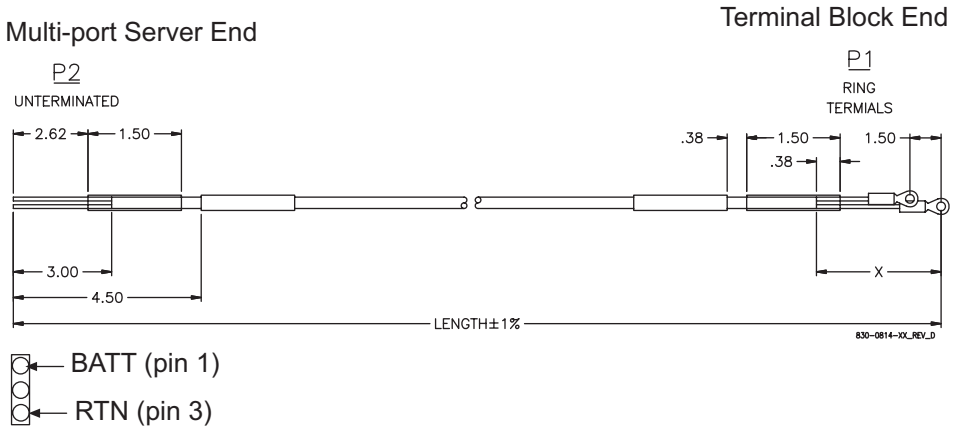

830-0822-01 Ground Cable

Figure C-42. Ground Cable P/N 830-0822-01

DASH NUMBER	CABLE LENGTH (XX)	LABEL 'A' USAGE	LABEL 'B' USAGE	REVISION LEVEL
–01	14.38"	FRAME	HUB	A
–02	14.38"	FRAME	SWITCH	A

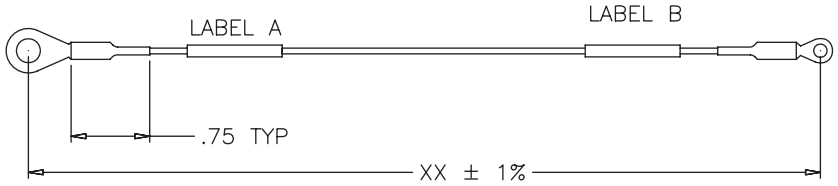

830-0822-XX

830-0830-01 Ground Cable

Figure C-43. Ground Cable P/N 830-0830-01

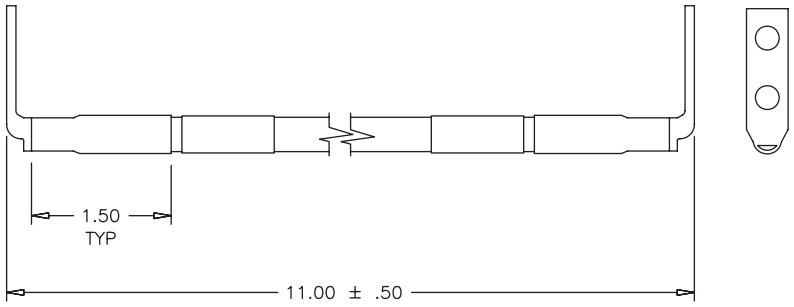

830-0830-01

830-0846-01 High Speed Master Timing Adapter

Figure C-44. HS Master Timing Adapter P/N 830-0846-01

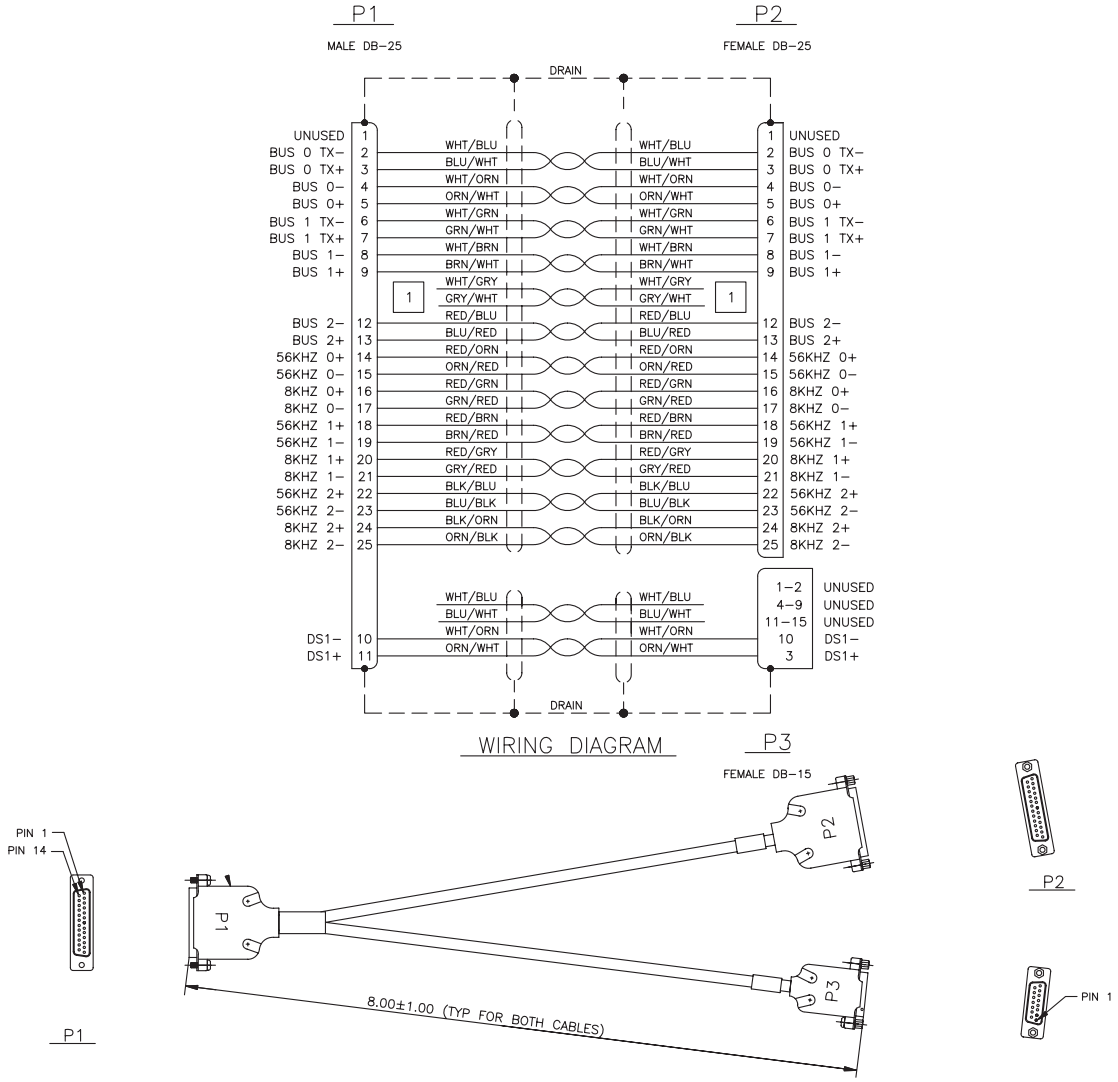

830-0849-xx DS1 Cable

Figure C-45. DS1 Cable P/N 830-0849-xx

PART NO.	LENGTH FEET	METERS
830-0849-01	15	4.57
830-0849-02	20	6.09
830-0849-03	25	7.62
830-0849-04	30	9.14
830-0849-05	35	10.66
830-0849-06	50	15.24
830-0849-07	75	22.86
830-0849-08	100	30.48
830-0849-09	125	38.1
830-0849-10	150	45.72
830-0849-11	175	53.34
830-0849-12	200	60.96
830-0849-13	250	76.2
830-0849-14	300	91.44
830-0849-15	500	152.4
830-0849-16	650	198.12

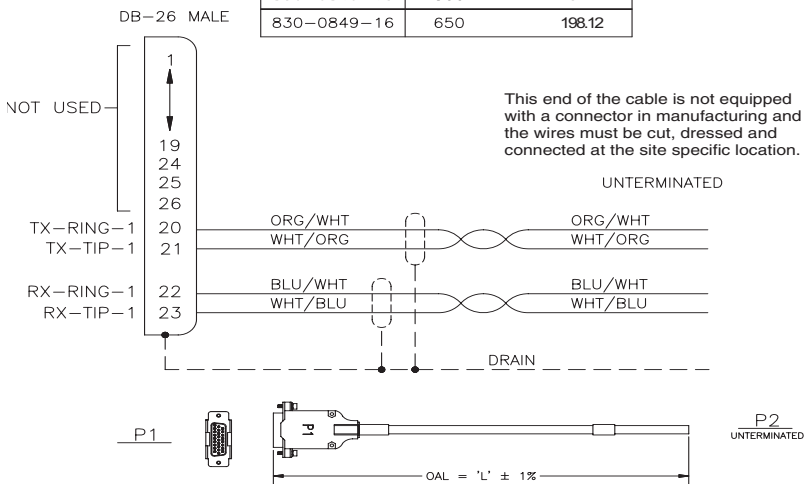

830-0859-xx Null-MODEM for Terminal

Table C-11. Null-MODEM for Terminal P/N 830-0859-xx

Part Numbers	Feet	Inches	Meters	Rev Level	Part Numbers	Feet	Inches	Meters	Rev Level
830-0859-01	.5	6	0.152	A	830-0859-09	75	900	22.86	A
830-0859-02	10	120	3.48	A	830-0859-10	100	1200	30.48	A
830-0859-03	15	180	4.57	A	830-0859-11	125	1500	38.10	A
830-0859-04	20	240	6.96	A	830-0859-12	150	1800	45.72	A
830-0859-05	25	300	7.62	A	830-0859-13	200	2400	60.96	A
830-0859-06	30	360	9.14	A	830-0859-14	6.0	72	1.82	A
830-0859-07	35	420	10.66	A	830-0859-15	7.0	84	2.13	A
830-0859-08	50	600	15.24	A					

Figure C-46. Null-MODEM for Terminal P/N 830-0859-01

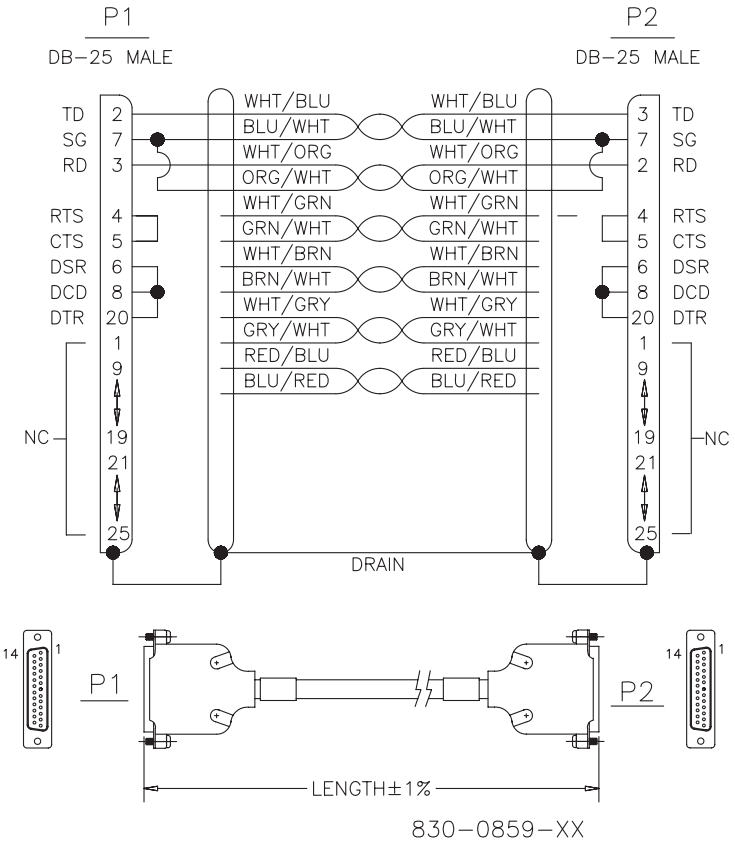

830-0866-xx Breaker to Terminal Strip Power Cable

Figure C-47. Power Cable to Breaker Strip P/N 830-0866-xx

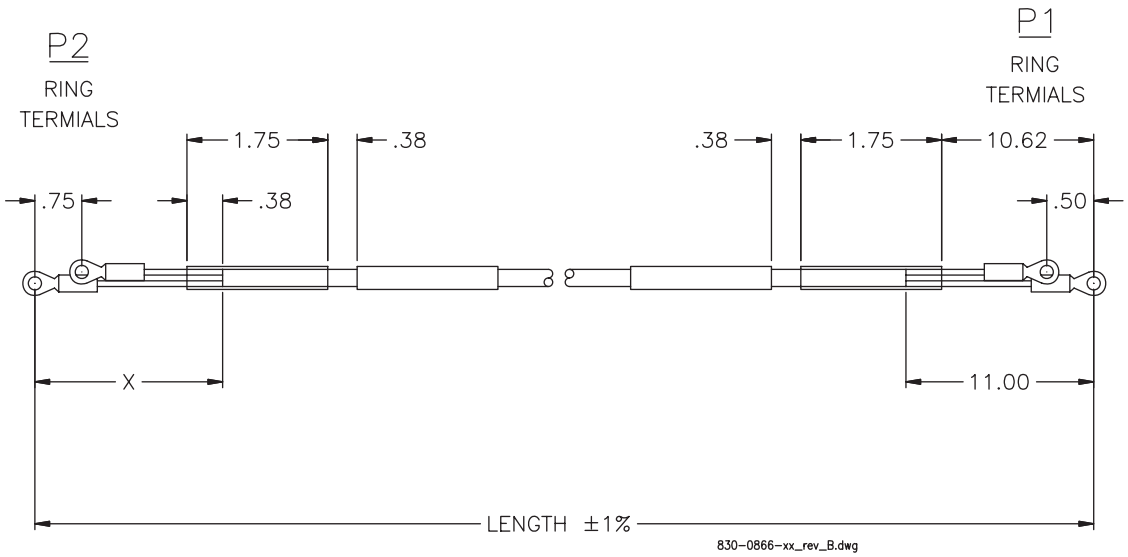

Table C-12. Breaker Strip Power Cable P/N 830-0866-xx

Part Number	Length inches	Length meters	P1 Long Lead	P2 Long Lead	Label "A" usage	Label "B" usage
830-0866-01	48.5	14.78	Black	Red	BP-1, POS 1B	TB1, POS 3 and 4
830-0866-02	51.5	15.69	Black	Black	BP-2, POS 1B	TB2, POS 3 and 4
830-0866-03	53.5	16.30	Black	Red	BP-1, POS 1A	TB3, POS 3 and 4
830-0866-04	46.5	14.17	Black	Black	BP-2, POS 1B	TB4, POS 3 and 4
830-0866-05	86.0	26.21	Black	Red	BP-2, POS 3B	TB2, POS 3 and 4
830-0866-06	88.0	88.0	Black	Black	BP-1, POS 3A	TB3, POS 3 and 4

830-0868-xx Power Cable

Figure C-48. Power Cable P/N 830-0868-xx

DASH NUMBER	LENGTH (IN)±1%	X (IN)±1%	Y (IN)±1%	P1 LONG LEAD	P2 LONG LEAD	LABEL "A" USAGE	LABEL "B" USAGE
−01	76.0	17.0	16.62	BLACK	RED	BP−1, POS 2A	HUB 1A
−02	66.0	11.0	10.62	BLACK	BLACK	BP−2, POS 2B	HUB 1B
−03	72.0	17.0	16.62	BLACK	RED	BP−2, POS 2A	HUB 2A
−04	70.0	11.0	10.62	BLACK	BLACK	BP−1, POS 2B	HUB 2B
−05	32.5	17.0	16.62	BLACK	RED	BP−1, POS 2A	HUB 1A
−06	25.0	11.0	10.62	BLACK	BLACK	BP−2, POS 2B	HUB 1B
−07	34.0	17.0	16.62	BLACK	RED	BP−1, POS 4A	HUB 2A
−08	26.5	11.0	10.62	BLACK	BLACK	BP−2, POS 4B	HUB 2B
−09	31.0	17.0	16.62	BLACK	RED	BP−2, POS 2A	HUB 3A
−10	29.5	11.0	10.62	BLACK	BLACK	BP−1, POS 2B	HUB 3B
−11	32.5	17.0	16.62	BLACK	RED	BP−2, POS 4A	HUB 4A
−12	31.0	11.0	10.62	BLACK	BLACK	BP−1, POS 4B	HUB 4B
−13	76.0	17.0	16.62	BLACK	RED	BP−1, POS 2A	SWITCH 1A
−14	66.0	11.0	10.62	BLACK	BLACK	BP−2, POS 2B	SWITCH 1B
−15	72.0	17.0	16.62	BLACK	RED	BP−2, POS 2A	SWITCH 2A
−16	70.0	11.0	10.62	BLACK	BLACK	BP−1, POS 2B	SWITCH 2B

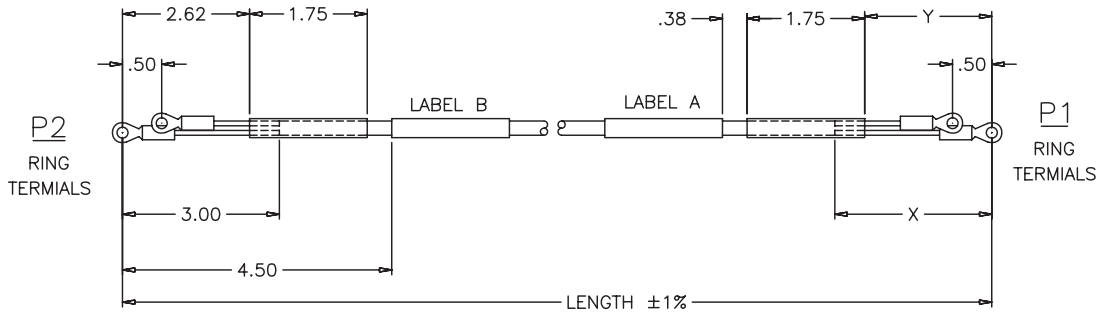

830-0868-XX rev_C

830-0869-xx Router Power Cable

Table C-13. Router Power Cable P/N 830-0869-xx

Part Number	Length inches	X inches	P1 Long Lead	P2 Long Lead	Label "A" usage	Label "B" usage
830-0869-01	72.0	11.0	Black	Red	BP-1, POS 3A	ISO Router A
830-0869-02	79.0	17.0	Black	Red	BP-1, POS 3B	Dial-in Router
830-0869-03	78.0	17.0	Black	Red	BP-2, POS 3B	ISO Router B
830-0869-04	78.0	17.0	Black	Red	BP-1, POS 6B	Dial-in Router
830-0869-05	72.0	11.0	Black	Red	BP-1, POS 5A	ISO Router A
830-0869-06	78.0	17.0	Black	Red	BP-1, POS 5B	ISO Router B
830-0869-07	82.0	22.0	Black	Red	To BP-1, POS 6B from Router YEL	To Router YEL from BP-1 POS 6A
830-0869-08	74.0	14.0	Black	Red	To BP-1, POS 6B from Router BLU	To Router BLU from BP-1 POS 6A
830-0869-09	38.0	11.0	Black	Red	BP-2, POS 4A	Dial-in Router

Figure C-49. Router Power Cable P/N 830-0869-xx

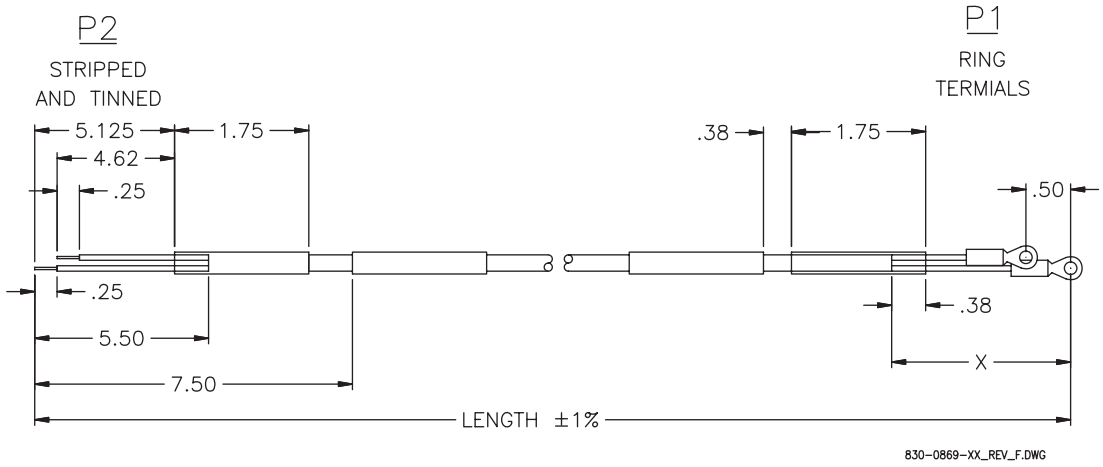

830-0872-xx RAID Power Cable

Table C-14. RAID Power Cable P/N 830-0872-xx

Part Number	Length inches	Length meters	P1 Long Lead	P2 Long Lead	Label "A" usage	Label "B" usage
830-0872-01	91.0	27.73	Black	Red	BP-1, POS 3A	RAID A, PS A
830-0872-02	89.5	27.27	Black	Black	BP-2, POS 3B	RAID A, PS B
830-0872-03	95.0	28.95	Black	Red	BP-2, POS 3A	RAID B, PS A
830-0872-04	93.5	28.49	Black	Black	BP-1, POS 3B	RAID B, PS B
830-0872-05	95.0	28.95	Black	Red	Input Power	PS A
830-0872-06	93.5	28.49	Black	Black	Input Power	PS B
830-0872-07	49.0	14.93	Black	Red	BP-1, POS 5A	RAID A, PS A
830-0872-08	47.5	14.47	Black	Black	BP-2, POS 5B	RAID A, PS B
830-0872-09	79.5	24.23	Black	Red	BP-2, POS 5A	RAID B, PS A
830-0872-10	78.0	23.77	Black	Black	BP-1, POS 5B	RAID B, PS B

Figure C-50. RAID Power Cable P/N 830-0872-xx

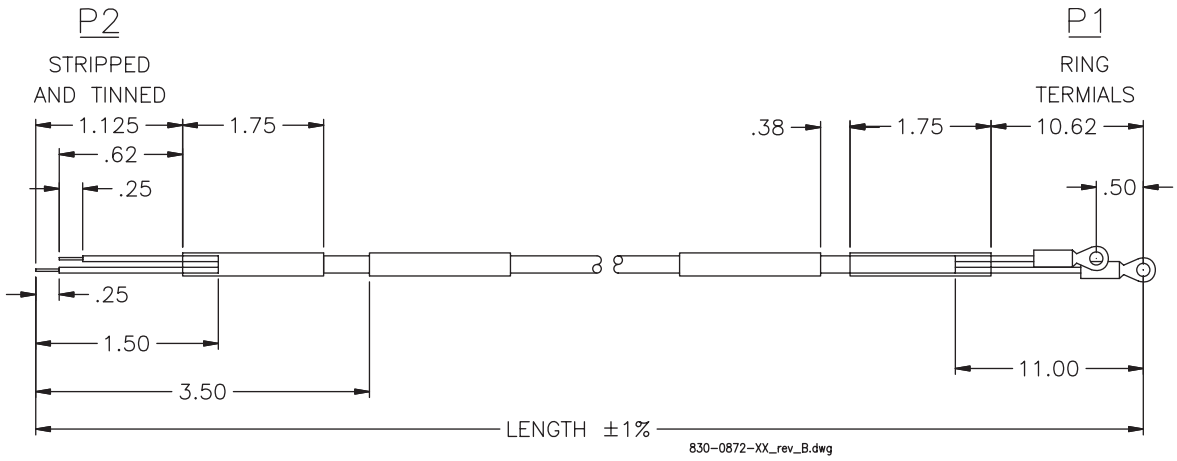

830-0892-xx Multi-Port DS0 Cable (24 AWG)

Figure C-51. Multi-Port DS0 P/N 830-0892-xx

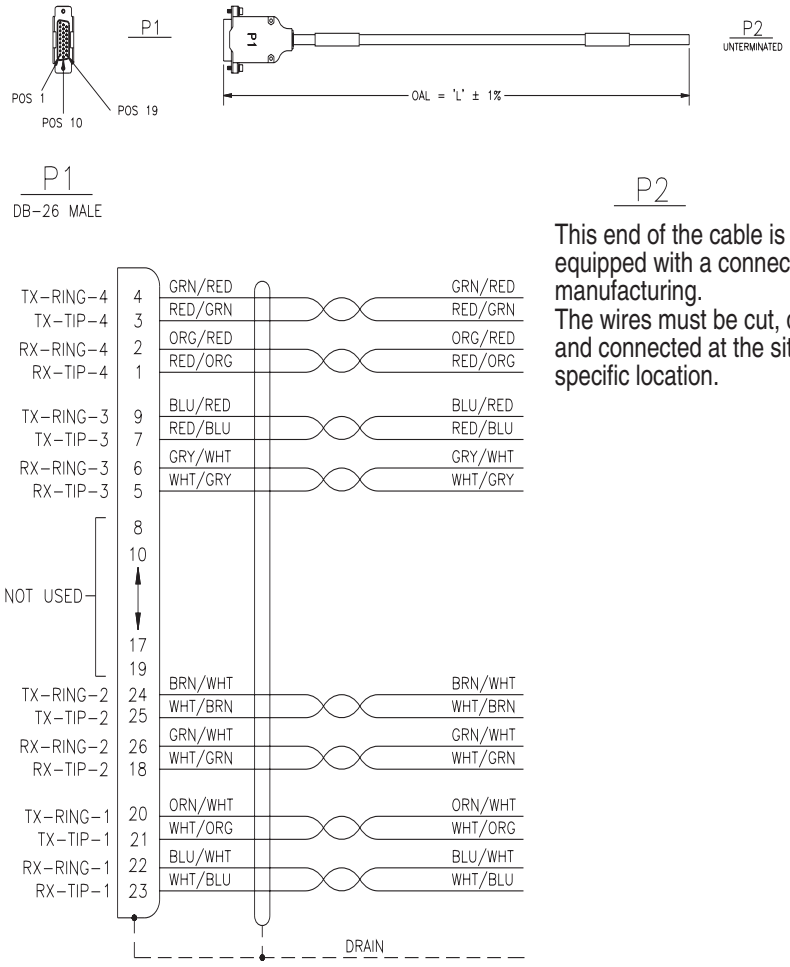

830-0814-xx SXi Data Cable

Figure C-52. SX*i* Data Cable P/N 830-0814-xx rev D

DASH NUMBER	LENGTH (IN)±1%	X (IN)±.12	LABEL "A" USAGE	LABEL "B" USAGE
−01	64.0	6.0	TB1, POS 1&4	SERVER B, PS1B
−02	70.5	6.5	TB1, POS 2&5	SERVER B, PS2B
−03	77.0	7.0	TB1, POS 3&6	SERVER B, PS3B
−04	64.0	6.0	TB4, POS 1&4	SERVER B, PS3A
−05	70.5	6.5	TB4, POS 2&5	SERVER B, PS2A
−06	77.0	7.0	TB4, POS 3&6	SERVER B, PS1A
−07	44.5	11.5	TB2, POS 1&4	SERVER A, PS1B
−08	51.0	12.0	TB2, POS 2&5	SERVER A, PS2B
−09	57.5	12.5	TB2, POS 3&6	SERVER A, PS3B
−10	44.5	11.5	TB3, POS 1&4	SERVER A, PS3A
−11	51.0	12.0	TB3, POS 2&5	SERVER A, PS2A
−12	57.5	12.5	TB3, POS 3&6	SERVER A, PS1A

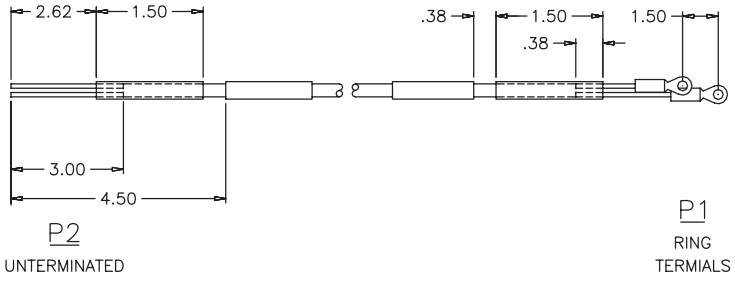

830-0857-01 HMUX Adapter Cable

Figure C-53. HMUX Adapter Cable P/N 830-0857-01

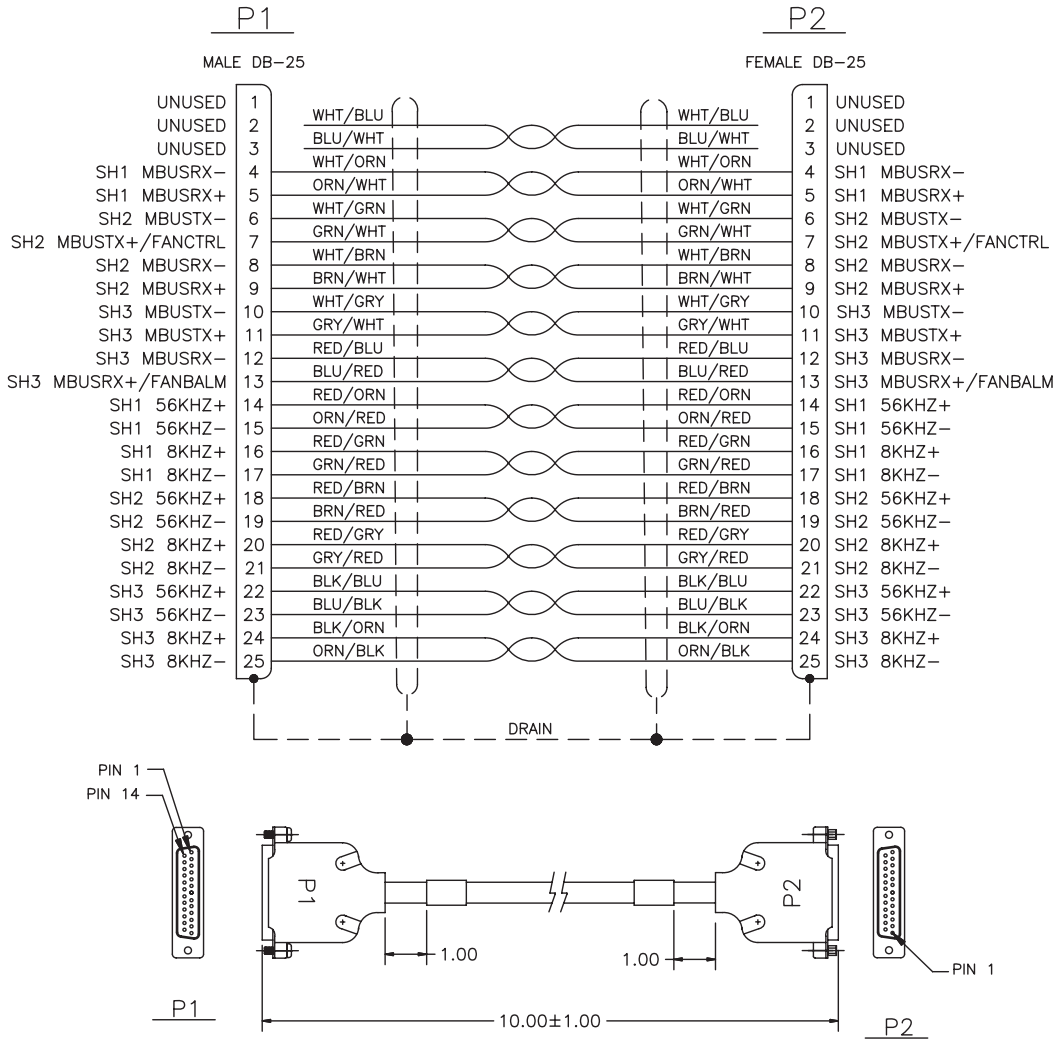

830-0884-01 Switch to Frame Ground Cable

Figure C-54. Switch to Frame Ground Cable P/N 830-0884-01

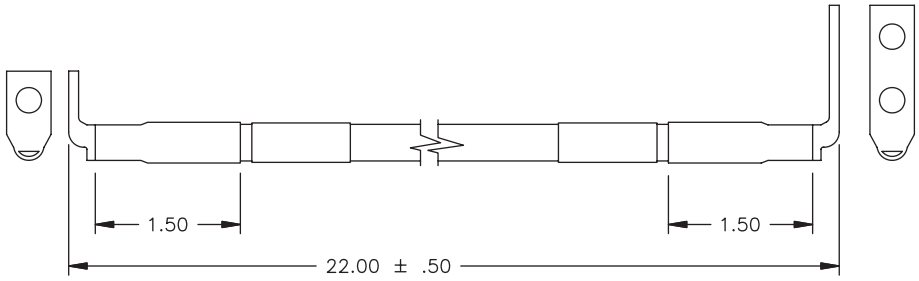

PART NUMBER	LENGTH (IN) ±.50	LABEL 'A' USAGE	LABEL 'B' USAGE	APPLICATION
830–0884–01	22.00	FRAME	SWITCH	CABLE GROUND, SWITCH TO FRAME, NTW

830-0884-01gnd

830-0888-xx RJ45/RJ45 Cable (Yellow)

Table C-15. RJ45/RJ45 Cable P/N 830-0888-xx

Part Number	Length feet	Length meter	Part Number	Length feet	Length meter
830-0888-01	1.0	.304	830-0888-06	8.0	2.43
830-0888-02	5.5	1.67	830-0888-07	10.0	3.04
830-0888-03	6.0	1.82	830-0888-08	12.0	3.65
830-0888-04	6.5	1.98	830-0888-09	15.0	4.57
830-0888-05	7.0	2.13	830-0888-10	16.0	4.87

Figure C-55. RJ45/RJ45 P/N 830-0888-xx

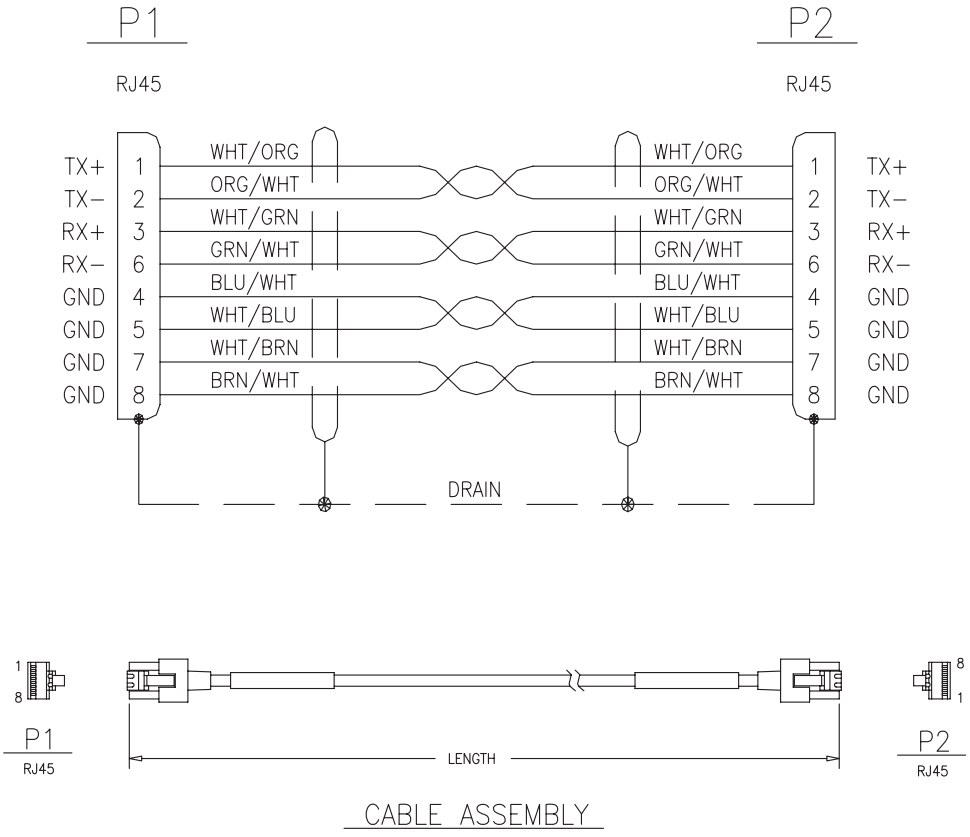

830-0889-xx RJ45/RJ45 (Blue)

Table C-16. RJ45/RJ45 Cable (P/N 830-0889-xx)

Part Number	Length feet	Length meters	Part Number	Length feet	Length meters
830-0889-01	1.0	.304	830-0889-06	8.0	2.43
830-0889-02	5.5	1.67	830-0889-07	10.0	3.04
830-0889-03	6.0	1.82	830-0889-08	12.0	3.65
830-0889-04	6.5	1.98	830-0889-09	15.0	4.57
830-0889-05	7.0	2.13	830-0889-10	16.0	4.87

Figure C-56. RJ45/RJ45 (P/N 830-0889-xx)

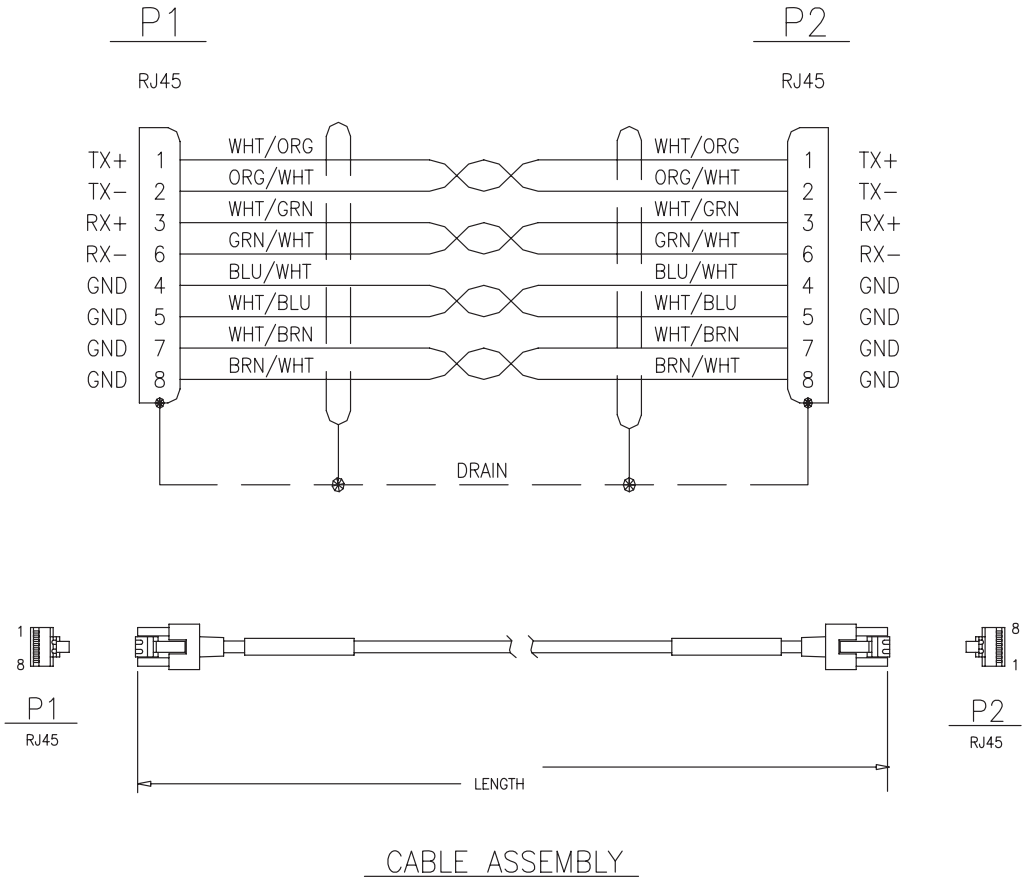

830-0894-xx T1 MIM LIM Cable

Figure C-57. T1 MIM LIM Cable P/N 830-0894-xx

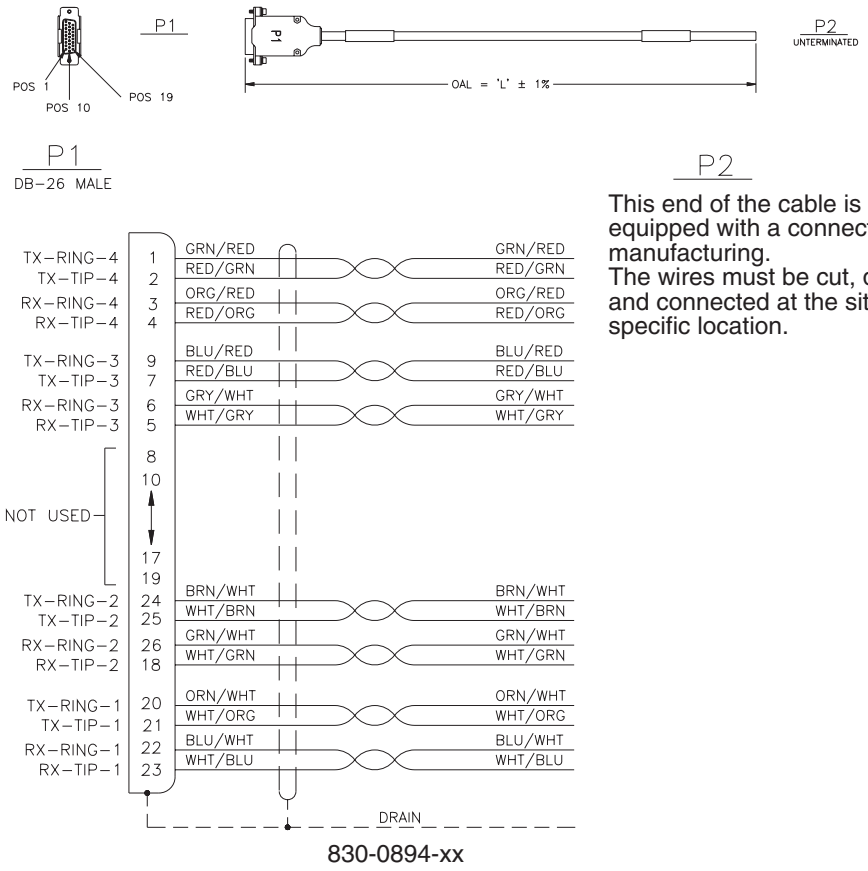

This Cable has been replaced by P/N 830-0948-01

830-0895-01 T1 LIM to MPL Cable Adapter

Cable adapter T1 LIM to Multi-Port LIM

This adapter is only to be used when installing an E1-T1 Card in an existing MPL location and wanting to terminate the E1 link on Port B.

Figure C-58. T1 LIM to MPL Cable Adapter P/N 830-0895-01

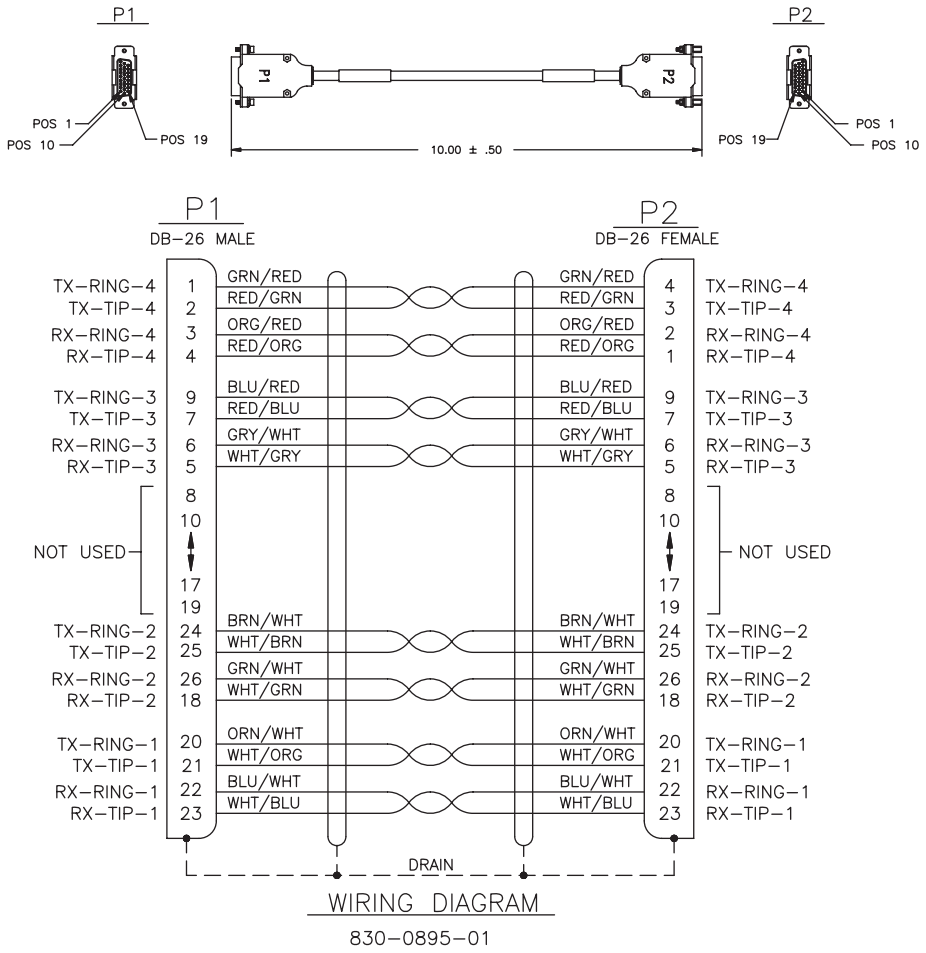

This Cable Adapter has been replaced by P/N 830-0949-01

830-0900-xx Alarm NETRA Server Cable

Figure C-59. Alarm NETRA Server Cable P/N 830-0900-xx

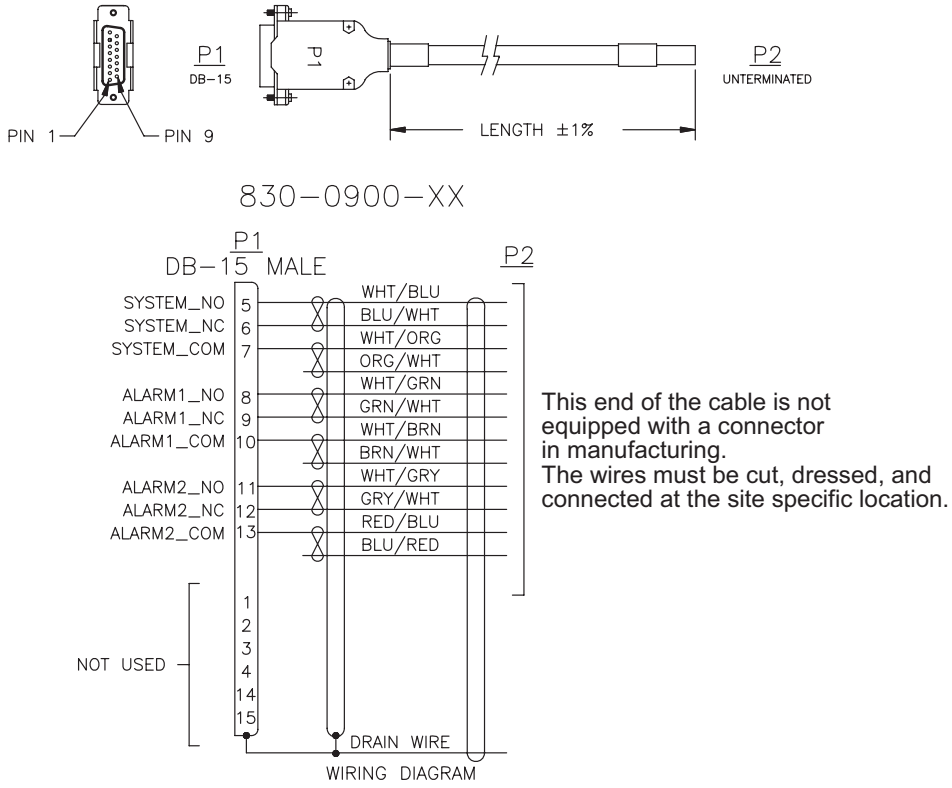

830-0901-xx Tone and Announcement Server Alarm Cable

Figure C-60. TAS Alarm Cable P/N 830-0901-xx

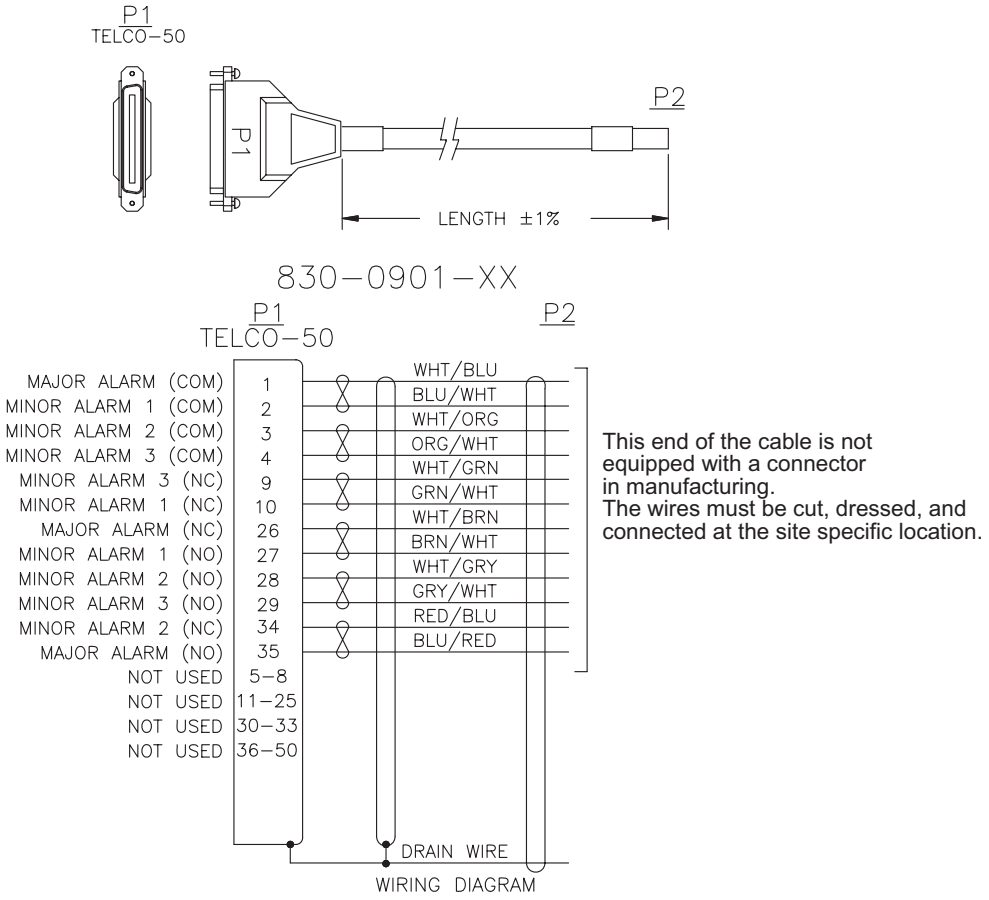

830-0906-01 Serial IF Cable Rev A

For SX*i* Serial IF P/N 830-0906-01 and cable description

Figure C-61. SX*i* Serial IF Cable P/N 830-0906-01

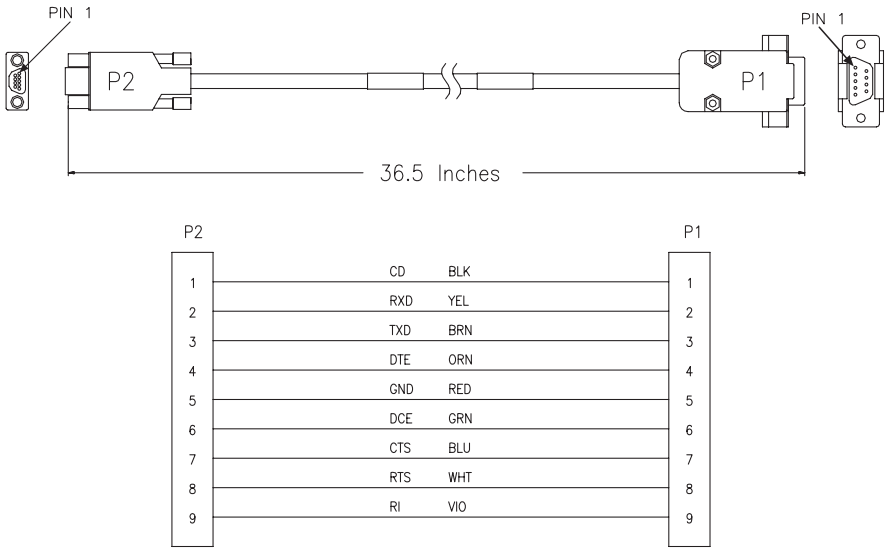

830-0907-xx Power Cable Rev A,

Figure C-62. SX*i* Power Cable P/N 830-0907-xx rev A

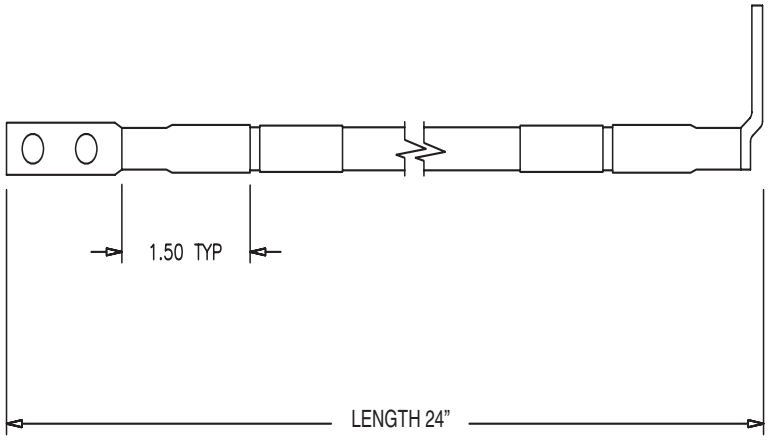

830-0908-xx Power Ring

Table C-17. Power Cable P/N 830-0908-xx

Part Number	Length inches	Length meters	Label "A" Usage	Label "A" Usage
830-0908-01	42.0	12.80	To switch 1-A from BP1-2A	To BP1-2A from switch 1-A
830-0908-02	44.0	13.41	To switch 1-B from BP1-2B	To BP2-2B from switch 1-B
830-0908-03	43.0	13.10	To switch 2-A from BP1-2A	To BP2-2A from switch 2-A
830-0908-04	46.0	14.02	To switch 2-B from BP1-2B	To BP1-2B from switch 1-B

Figure C-63. Power Ring P/N 830-0908-xx

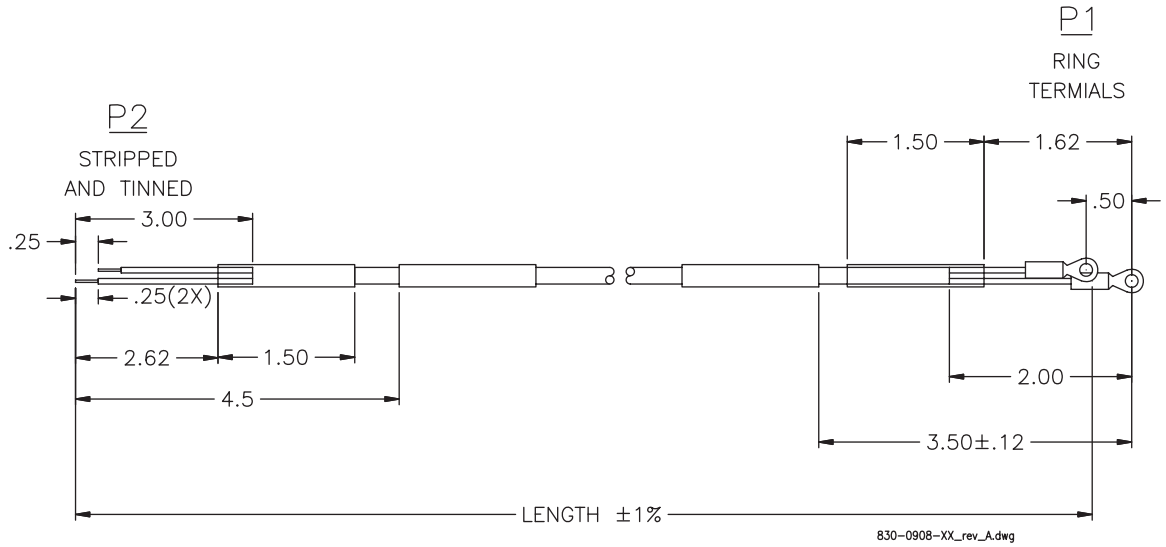

830-0913-01 J1 Router Cable Rev B

Cable P/N 830-0913-01 rev B and cable description

Figure C-64. VX*i* J1 Router Cable P/N 830-0913-01 rev B

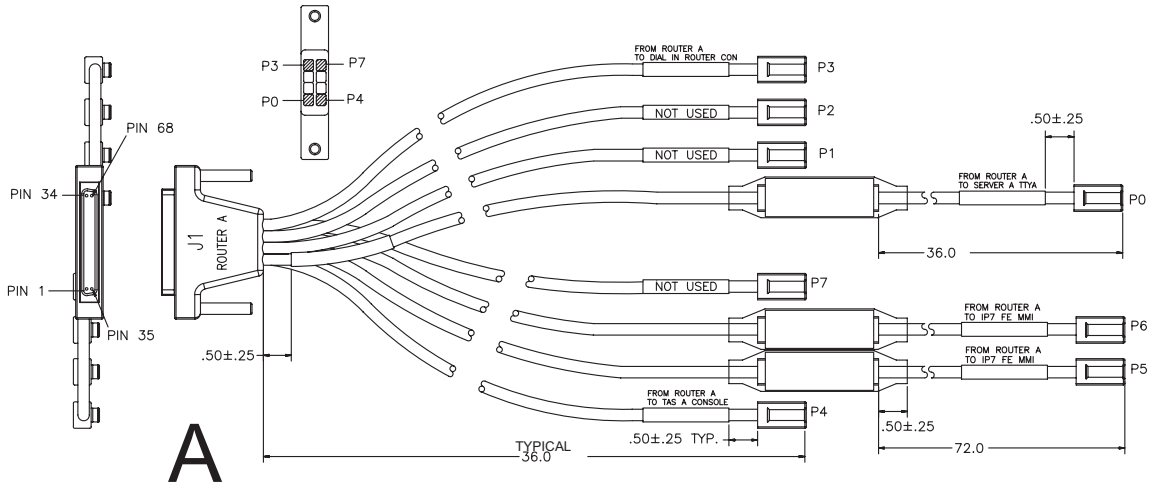

VXi Duplex Configuration
P/N 830-0913-01

A Label Marking	
CABLE LEAD	LABEL "A" DESIGNATIONS
J1–P0	FROM ROUTER A TO SERVER A–TTYA
J1–P1	NOT USED
J1–P2	NOT USED
J1–P3	FROM ROUTER A TO DIAL IN ROUTER CONSOLE
J1–P4	FROM ROUTER A TO TAS A CONSOLE
J1–P5	FROM ROUTER A TO IP7–FE MMI
J1–P6	FROM ROUTER A TO IP7–FE MMI
J1–P7	NOT USED

WIRING DIAGRAM TYPICAL

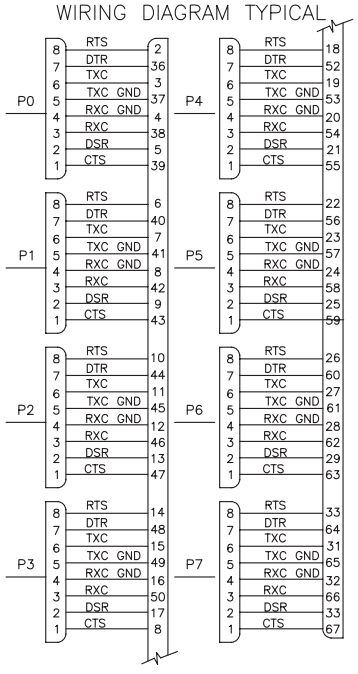

830-0913-02/03 Router Cable Rev B

For Router Cable P/N 830-0913-02-B/03-C rev B and cable description, refer to previous page for **wiring diagram**.

Figure C-65. Router Cable P/N 830-0913-02/03 rev B

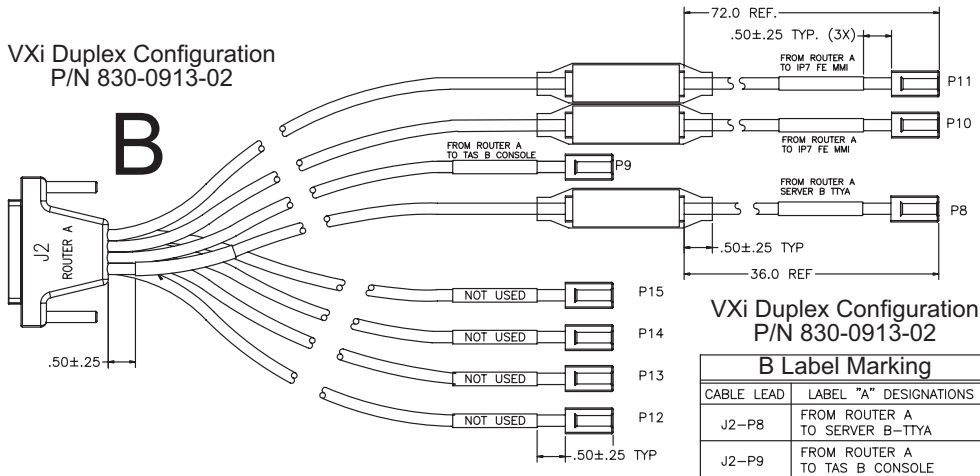

VXi Duplex Configuration
P/N 830-0913-02

B Label Marking	
CABLE LEAD	LABEL "A" DESIGNATIONS
J2–P8	FROM ROUTER A TO SERVER B–TTYA
J2–P9	FROM ROUTER A TO TAS B CONSOLE
J2–P10	FROM ROUTER A TO IP7–FE MM1
J2–P11	FROM ROUTER A TO IP7–FE MMI
J2–P12	NOT USED
J2–P13	NOT USED
J2–P14	NOT USED
J2–P15	NOT USED

PART NO.	"J" CONNECTOR MARKING	LABEL MARKING USEAGE	CONFIGURATION
830–0913–02	J2	TABLE B	DUPLEX
830–0913–03	J1	TABLE C	SIMPLEX

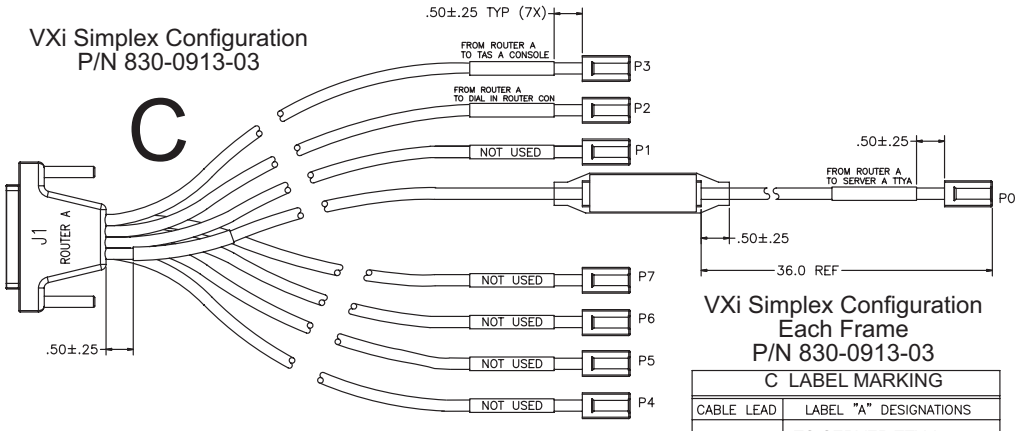

VXi Simplex Configuration
Each Frame
P/N 830-0913-03

C LABEL MARKING	
CABLE LEAD	LABEL "A" DESIGNATIONS
J1–P0	TO SERVER TTY A
J1–P1	NOT USED
J1–P2	FROM ROUTER A TO DIAL IN ROUTER CONSOLE
J1–P3	TO TAS CONCOLE
J1–P4	NOT USED
J1–P5	NOT USED
J1–P6	NOT USED
J1–P7	NOT USED

830-0917-01 RJ45 to 9 Pin, Adapter

Figure C-66. Adapter RJ45 to 9 Pin 830-0917-01

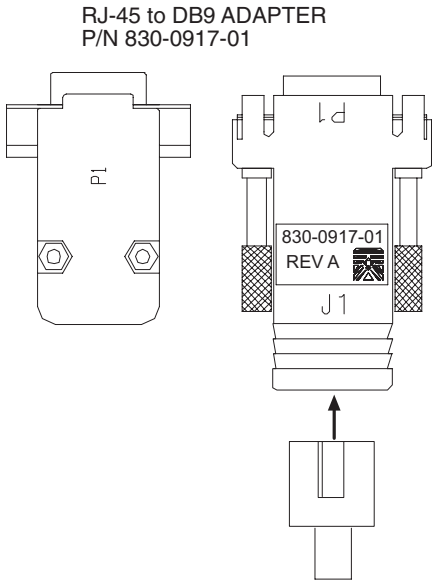

830-0948-xx E1/T1 MIM LIM Cable

Figure C-67. E1/T1 MIM LIM P/N 830-0948-xx

PART NO.	REV	LENGTH
830-0948-01	B	15 FT
830-0948-02	B	20 FT
830-0948-03	B	25 FT
830-0948-04	B	30 FT
830-0948-05	B	35 FT
830-0948-06	B	50 FT
830-0948-07	B	75 FT
830-0948-08	B	100 FT
830-0948-09	B	125 FT
830-0948-10	B	150 FT
830-0948-11	B	175 FT
830-0948-12	B	200 FT
830-0948-13	B	250 FT
830-0948-14	B	300 FT
830-0948-15	B	500 FT
830-0948-16	B	1000 FT

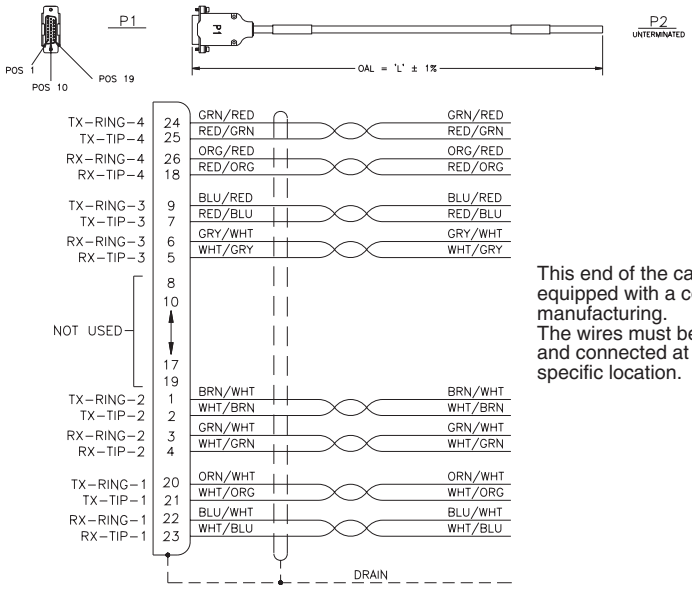

E1/T1 MIM LIM
P/N 830-0948-xx

830-0949-xx E1/T1 MIM LIM to MPL Adapter

Figure C-68. E1/T1 MIM LIM To MPL Adapter P/N 830-0949-xx

PART NO.	REV	LENGTH
830-0949-01	B	15 FT
830-0949-02	B	20 FT
830-0949-03	B	25 FT
830-0949-04	B	30 FT
830-0949-05	B	35 FT
830-0949-06	B	50 FT
830-0949-07	B	75 FT
830-0949-08	B	100 FT
830-0949-09	B	125 FT
830-0949-10	B	150 FT
830-0949-11	B	175 FT
830-0949-12	B	200 FT
830-0949-13	B	250 FT
830-0949-14	B	300 FT
830-0949-15	B	500 FT
830-0949-16	B	1000 FT

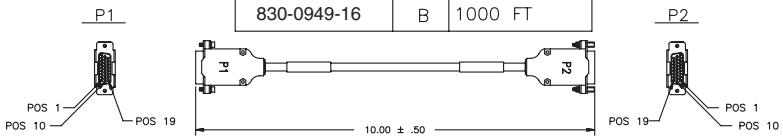

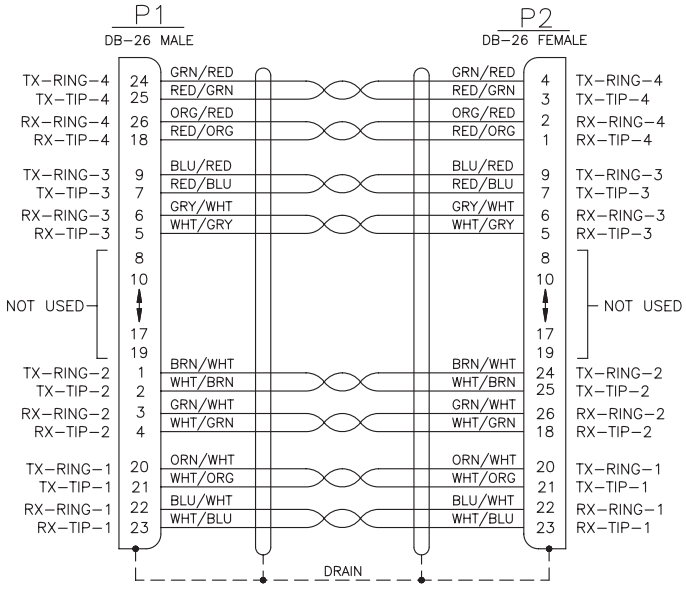

E1/T1 MIM LIM to MPL CABLE ADAPTER

P/N 830-0949-01

830-0961-xx Serial Alarm Cable

Figure C-69. Serial Alarm Cable P/N 830-0961-xx

PART NO.	LENGTH (INCHES)	REVISION LEVEL
830–0961–01	72.0±1%	B
830–0961–02	144.0±1%	B

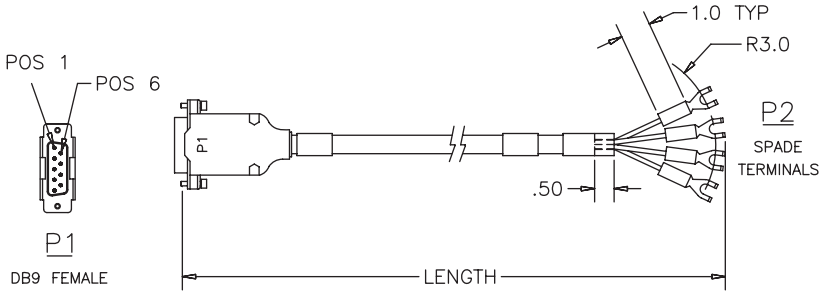

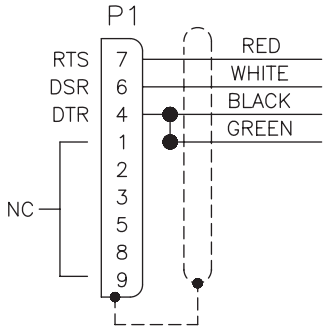

830-0961-XX

830-0963-xx DB9 F to DB15 M Serial Cable

Figure C-70. DB9 F to DB15 M Serial P/N 830-0963-xx

PART NO.	LENGTH (INCHES)	REVISION LEVEL
830–0963–01	60.0±1%	B
830–0963–02	120.0±1%	B
830–0963–03	180.0±1%	B
830–0963–04	240.0±1%	B
830–0963–05	300.0±1%	B

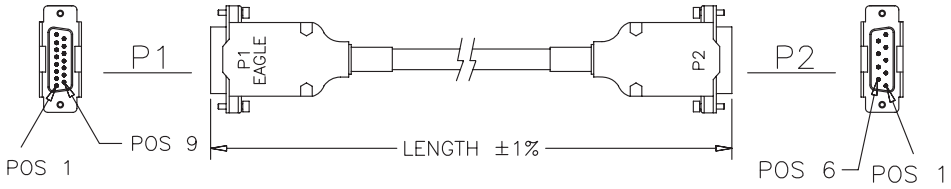

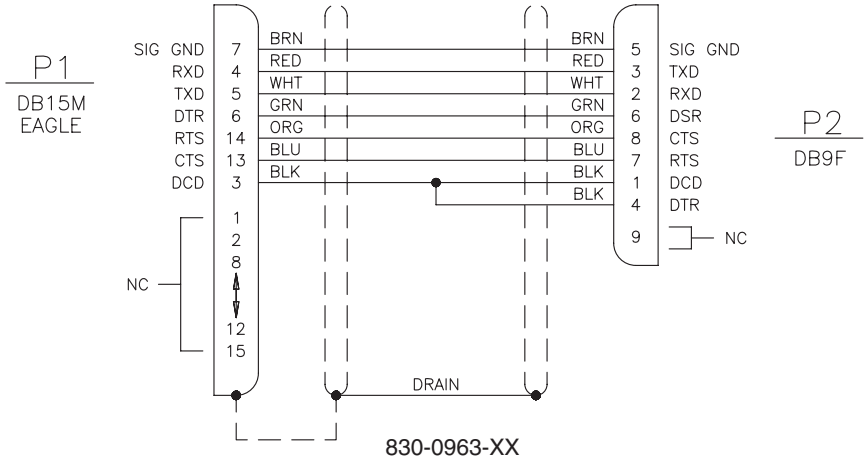

830-0965-xx Tekelec 1000 Power Cable

Figure C-71. Power Cable Tekelec 1000 P/N 830-0965-XX

DASH NUMBER	LENGTH (IN)±1%	X (IN)±.12	P2 LONG LEAD	LABEL "A" USAGE	LABEL "B" USAGE	REVISION LEVEL
830-0965-01	60.0	6.0	BLACK	TB3, POS 1&4	SERVER A, PWR A	A
830-0965-02	60.0	6.5	BLACK	TB2, POS 1&4	SERVER A, PWR B	A
830-0965-03	72.0	6.0	BLACK	TB4, POS 1&4	SERVER B, PWR A	A
830-0965-04	72.0	6.5	BLACK	TB1, POS 1&4	SERVER B, PWR B	A

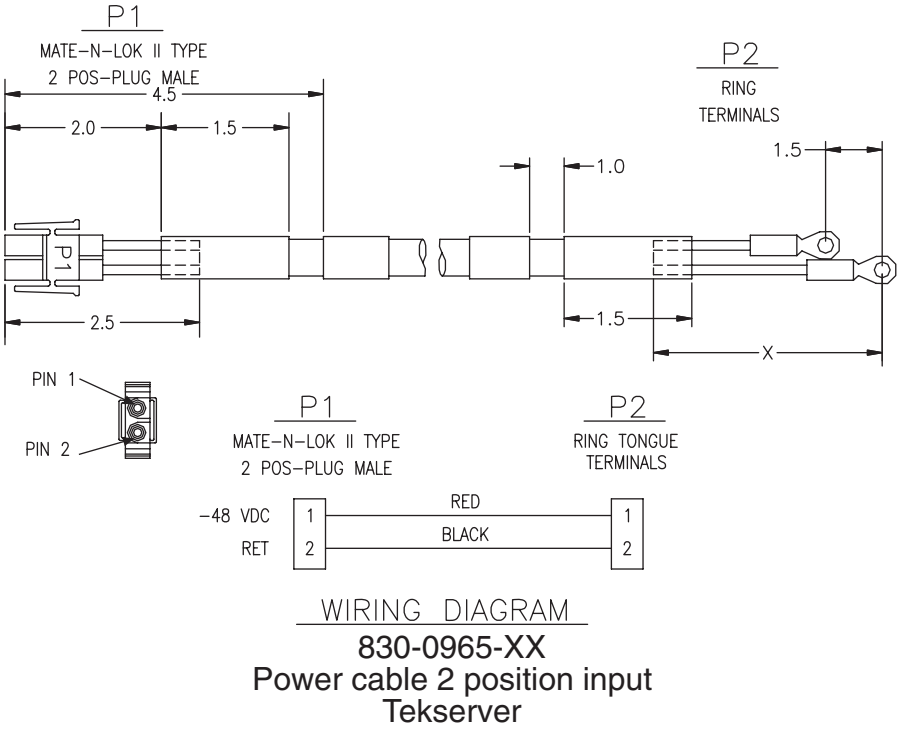

830-0970-xx Null Modem Assembly Cable

Figure C-72. Assembly Null Modem Cable P/N 830-0970-xx

PART NO.	LENGTH (INCHES)	REVISION LEVEL
830–0970–01	60.0±1%	A
830–0970–02	120.0±1%	A
830–0970–03	180.0±1%	A
830–0970–04	240.0±1%	A
830–0970–05	300.0±1%	A

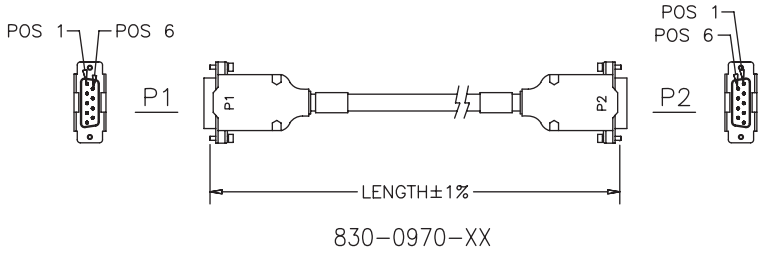

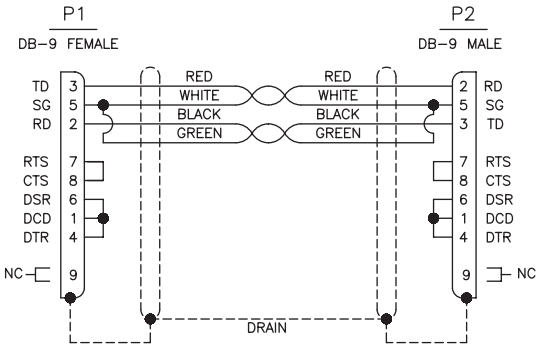

CABLE ASSYSERIAL_NULL MODEM_DB9F/DB9M_SHIELDED

830-0972-01 Tekelec 1000 Serial DB44 to DB9 (X4)

Table 3-18. Tekelec 1000 Serial Pin Outs

Tekelec 1000 Serial DB44 to DB9											
	Pin 1	Pin 0		Pin 2	Pin 0		Pin 3	Pin 0		Pin 4	Pin 0
DCD	1	3	DCD	1	7	DCD	1	11	DCD	1	15
RD	2	4	RD	2	8	RD	2	12	RD	2	30
TD	3	1	TD	3	5	TD	3	9	TD	3	13
DTR	4	32	DTR	4	36	DTR	4	40	DTR	4	43
GND	5	17	GND	5	21	GND	5	24	GND	5	28
DSR	6	31	DSR	6	35	DSR	6	39	DSR	6	42
RTS	7	2	RTS	7	6	RTS	7	10	RTS	7	14
CTS	8	16	CTS	8	20	CTS	8	23	CTS	8	27
RI	9	33	RI	9	37	RI	9	41	RI	9	44

Figure C-73. Serial DB44 to DB9 Tekelec 1000 P/N 830-0972-01

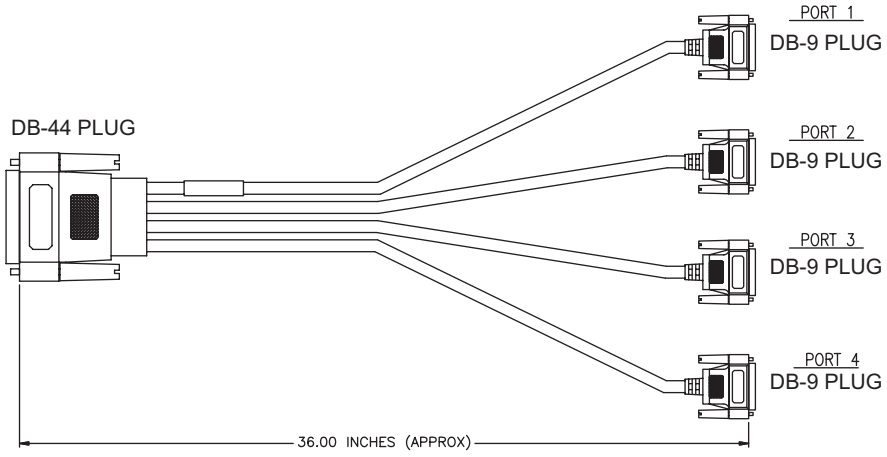

ATM E1/T1 Cards populate slots one though six slots see on the rear of the Tekelec 1000

830-0959-01 ATM E1-T1 Cable

Figure C-74. ATM E1/T1 Cable P/N 830-0959-XX

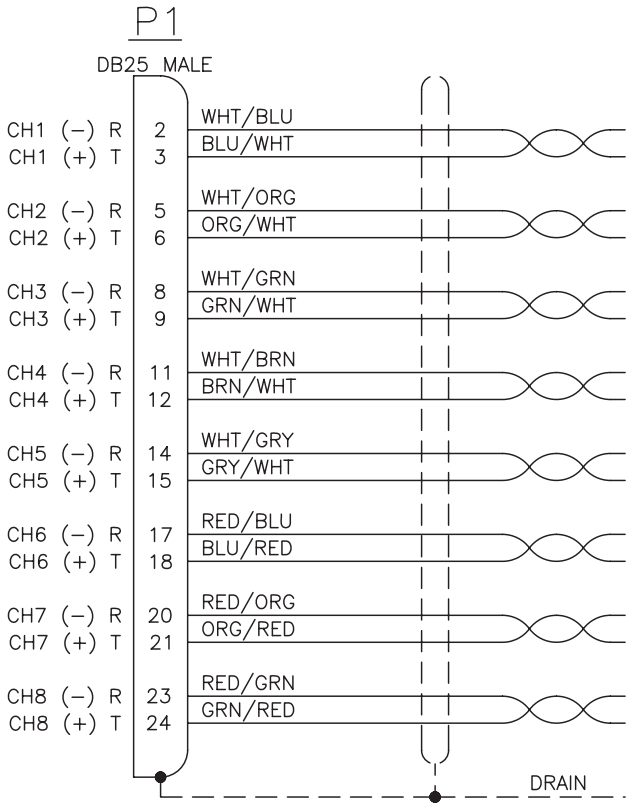

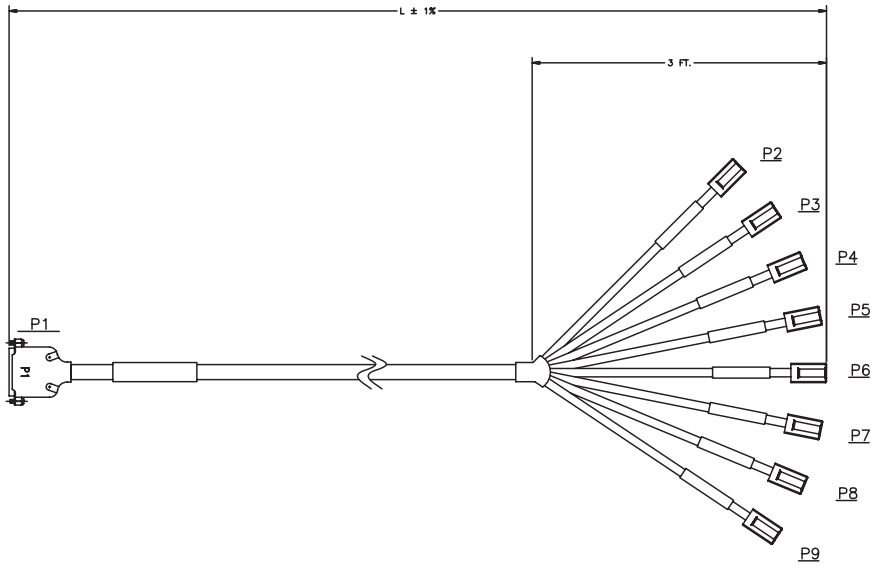

830-0987-01 ATM E1-T1 Cable

Figure C-75. ATM Cable P/N 830-0987-01

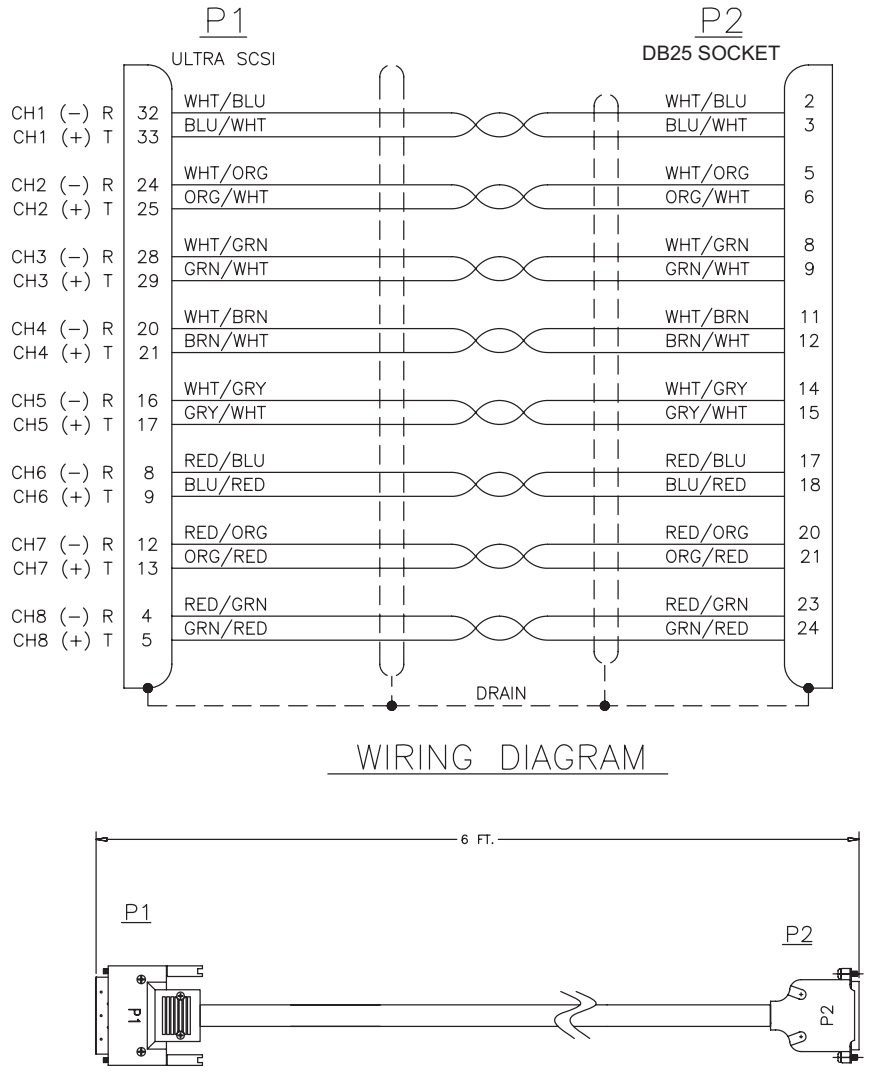

850-0496-01 Force Transition Card

Figure C-76. Force Transition Card P/N 850-0496-01

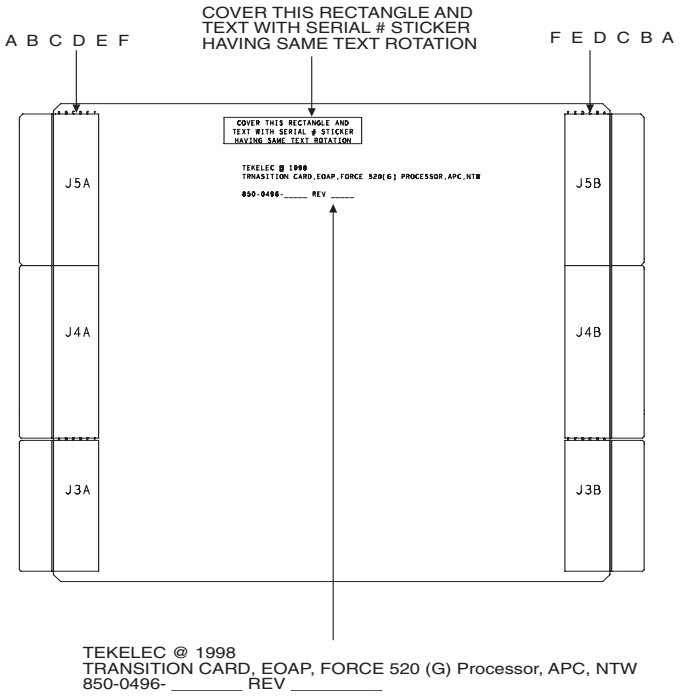

Fan Orientation Wiring Diagram Tekelec 1000

Figure C-77. Tekelec 1000 Fan Orientation Wiring Diagram

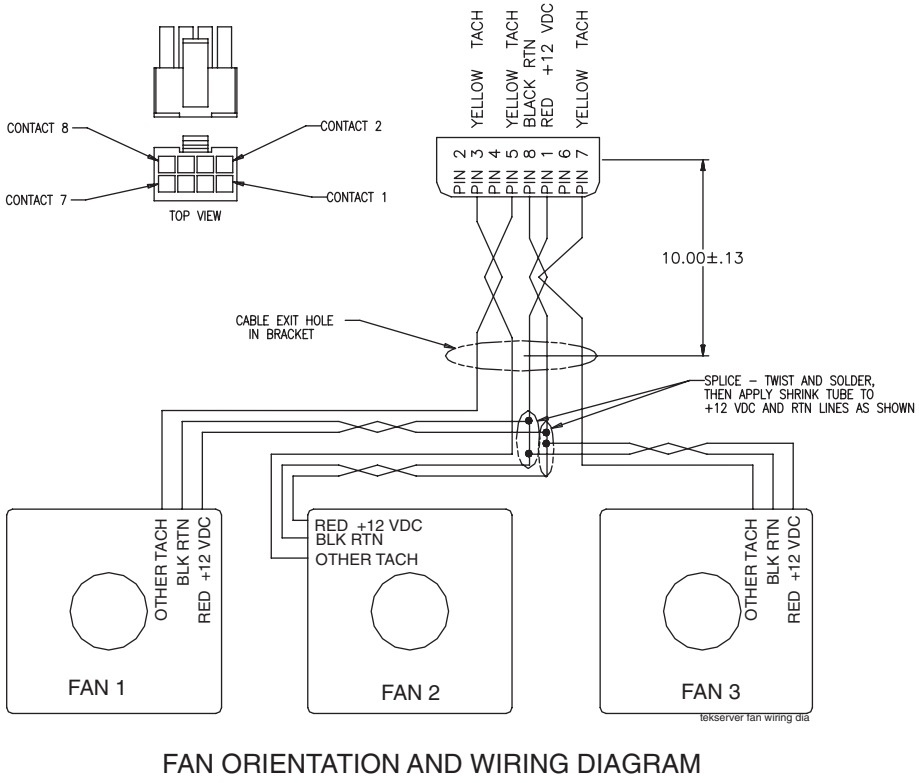

FAN ORIENTATION AND WIRING DIAGRAM

D

Power Cords to Peripherals

International Power Cords D–2

International Power Cords

Table D-1. International Power Cords For Peripheral Equipment

Country	Part Number	Voltage	Frequency	Plug Pattern
USA	Cord provided	120	60	K
Argentina	804-1185-08	220	50	T
Australia/New Zealand	804-1185-02	220-230	50	A, B,C
Austria	804-1185-01	240	50	C, D
Belgium	804-1185-01	220-230	50	B, F
Canada	Cord provided	120	60	K
Chile	804-1185-01	220	50	B, I
Columbia	Cord provided	110-120	60	N
Denmark	804-1185-04	220-230	50	B, E
Finland	804-1185-01	220-230	50	A, B
France	804-1185-01	220-230	50	B, F
Germany	804-1185-01	220-230	50	A, B
Greece	804-1185-01	220-230	50	A, B
India	804-1185-06	220-230	50	G
Ireland	804-1185-03	220	50	D
Italy	804-1185-07	220-230	50	B, I
Luxembourg	804-1185-01	220-230	50	A, B
Malaysia	804-1185-03	240	50	D
Mexico	Cord provided	127	60	K
Netherlands	804-1185-01	220-230	50	A, B
Philippines	Cord provided	115	60	K, N
Portugal	804-1185-01	220-230	50	A, B, G
Romania	804-1185-01	220	50	A, B
South Africa	804-1185-06	220-250	50	G
South Korea	804-1185-01	220	60	A, K, N
Spain	804-1185-08	220-230	50	B, F
Sweden	804-1185-01	220-230	50	A, B
United Kingdom	804-1185-03	240	50	D, G

Index

"Cables" 1-6
"Connectors" 1-6
"Integrated Sentinel" 1-6
"LEDs" 1-6
"Power Cords to Peripherals" 1-6

A

ACM 1-37
Alarms
  routers A-17
  TAS A-20
alarms
  Garrett Magnum Hubs A-16
  Telect Breaker Panel A-14
Alarms Reference and User's Manual 1-18
Appendix A, LEDs 1-12
Appendix B, Connectors 1-12
Appendix C, Cables 1-12
Appendix D, Power Cords to Peripherals 1-12
ATM A-3

B

backplane, extension shelf B-9
Breaker A-14

C

cables
  labeling C-4
Cables, Adapter for -03 and -04 backplanes C-50
Chapter 1, Introduction 1-12
Chapter 4, Sentinel describes the Expanded Services Platform 1-12
Chapter 8, Integrated Sentinel 1-12
CI 1-37
Common Language Location Identifier 1-23
critical problem 1-22
Customer Assistance 1-21
Customer Service Report (CSR) 1-23
Customer Service Request 1-22

D

Data Collection Applications Manual 1-18
Data Collection Subsystem, Collection and Delivery document 1-19
DCM 1-37
documents
  Alarms Reference and User's Manual 1-18
  Data Collection Applications Manual 1-18
  Feature Notice 1-18
  hardware and installation 1-19
  list of Sentinel 1-18
  Release Notice 1-18
  System Administrator's Guide 1-18
  technical reference documents 1-19
  User's Manual 1-18
DSM 1-37

E

E1 A-3, A-5
EDCM 1-37
EILA (P/N 870-2049-01 1-37, A-3
emergency response 1-23
Ethernet hub description 2-13
EXT ALM C-19
extension shelf power connectors B-24

F

Feature Guide
  documents
    Feature Guide 1-18
Feature Notice 1-18
fuse panel shelf power connectors B-28

G

general purpose relay connector 01 B-10
general purpose relay connector 02 B-11

H

Hardware and Installation Manuals 1-19
Hardware Operational Test Manual 1-40

hardware return 1-24
HMUX 1-37
hub
description 2-13
front LEDs A-18

I

i2000 Hardware Reference 1-19
ILA 1-38, A-3
IMT 1-37, 1-38
Installation Manuals 1-19
Installer's Cable Running List C-4
IP7 Front End A-17
IPMX 1-38
IPMX backplane connector B-15
IPMX backplane connectors B-20

L

label
cables C-4
LAN 2-13
LEDs A-1
Garrett Magnum Hubs A-16
hub front A-18
Netra t 1400 A-15
Telect Braker Panel A-14
LIM 1-38
LIM-AINF 1-38
LIM-ATM 1-38
LIM-DS0A 1-38
LMC connector B-23

M

major problem 1-22
manual
related publications 1-12
manuals
Alarms Reference and User's Manual 1-18
Data Collection Applications Manual 1-18
Feature Guide 1-18
Feature Notice 1-18
hardware and installation manuals 1-19
list of Sentinel 1-18
Release Notice 1-18
System Administrator's Guide 1-18
technical reference documents 1-19
User's Manual 1-18
MAU (Media Access Unit) 1-5
Media Access Unit (MAU) 1-5
minor problem 1-23
Multi-Purpose Server 1-11

N

Network A-13

P

P B-22, C-50
P/N 803-0229-01 C-7
P/N 804-1671-02 2-64
P/N 830-0543-01 C-19
P/N 850-0330-03 B-2, B-3
P/N 850-0330-03/04 B-2
P/N 850-0330-05 B-2, B-3
P/N 850-0330-05/06 B-2
P/N 850-0356-01 B-9, B-24
P/N 850-0356-03 B-24
P/N 870-0773-XX A-10
P/N 870-1009-xx A-11, A-12
P/N 870-1013-xx A-9
P/N 870-1014-xx A-3
P/N 870-1293-xx A-3
P/N 870-1307-04 A-9
P/N 870-1379-xx A-3, A-5
P/N 870-1484-xx A-3
P/N 870-1488-xx A-3
P/N 870-2049-01 A-3
P/N 870-2594-01 2-64
P/N 870-2595-01 2-64
power connectors B-25
problems
critical 1-22
major 1-22
minor 1-23
Production Control 1-21
publications, Sentinel 1-18

R

Release Notice 1-18
Repair and Return Shipping Instructions 1-27

return shipment 1-28
Returning a Crate 1-27
RMC connector B-26
routers A-17

S

SAP
technical reference documents 1-19
Sentinel Data Collection Subsystem, ANSI
ISUP CDR Data Feed document 1-19
Sentinel Data Collection Subsystem, ITU
ISUP CDR Data Feed document 1-19
Sentinel Data Collection Subsystem, LIDB
TDR Data Feed document 1-20
Sentinel Data Collection Subsystem, Peg
Counter Data Feed File Format
document 1-20
Sentinel publications 1-18
shipping container 1-21
Signaling/Cellular Generic Hardware
Reference 1-19
System Administrator's Guide 1-18

T

T1000 Fan Orientation Wiring Diagram C-83
TDM 1-39
Technical Reference Documents 1-19
Technical Services 1-22
Tekelec 1000
Manual 1-9
Tekelec 1000 Application Server Hardware
Manual 1-9, 1-19
Tekelec Customer Care Center 1-23
Tekelec Signaling Producsts Hardware
Manual 1-19
Tekelec Signaling Products Integrated
Applications Installation Manual
1-19
TOCA 1-39
TSM 1-39, B-4

U

User's Manual 1-18