Sun Netra™ X4450 Server Service Manual

Sun Microsystems, Inc.
www.sun.com

Part No. 820-4017-10
August 2008, Revision A

Submit comments about this document at: http://docs.sun.com/app/docs

Adobe PostScript

Contents

Preface

This manual provides detailed procedures that describe the removal and replacement of replaceable parts in the Sun Netra™ X4450 server. This manual also includes detailed and comprehensive diagnostics information and procedures. This document is written for technicians, system administrators, authorized service providers (ASPs), and users who have advanced experience troubleshooting and replacing hardware.

Related Documentation

The following table lists the documentation for this product. The online documentation is available at:

`http://docs.sun.com/app/docs/prod/server.nebs`

Application	Title	Part Number	Format	Location
Installation	*Sun Netra X4450 Server Installation Guide*	820-4015	PDF and HTML	Online
Issues and updates	*Sun Netra X4450 Server Product Notes*	820-4018	PDF and HTML	Online
ILOM Reference	*Sun Integrated Lights Out Management 2.0 Supplement for the Sun Netra X4450 Server*	820-5244	PDF and HTML	Online

Application	Title	Part Number	Format	Location
Platform safety and compliance	*Sun Netra X4450 Server Safety and Compliance Guide*	820-4183	PDF and HTML	Online
Generic safety	*Important Safety Information for Sun Hardware Systems*	816-7190	PDF and printed	Online and shipping kit
Getting started	*Sun Netra Servers Getting Started Guide*	820-3016	Printed	Shipping kit

CHAPTER 1

Server Diagnostics

This chapter describes the diagnostics that are available for monitoring and troubleshooting the server.

The following topics are covered:

1.1 Fault on Initial Power Up

If you have installed the server, and upon initial power up, you see errors indicating faults with the Fully Buffered DIMMs (FB-DIMMs), PCI cards, or other components, the suspect component might have become loose during shipment.

Conduct a visual inspection of the server internals and its components. Remove the top cover and physically reseat the cable connections, the PCI cards, and the FB-DIMMs.

1.2 Server Diagnostics Overview

There are a variety of diagnostic tools, commands, and indicators you can use to monitor and troubleshoot a server:

- **Status indicators** – These indicators provide a quick visual notification of the status of the server and of some of the FRUs.
- **Fault management architecture** – FMA provides simplified fault diagnostics through use of the `/var/adm/messages` file, the `fmdump` command, and a Sun Microsystems web site.
- **ILOM firmware** – This system firmware runs on the service processor. In addition to providing the interface between the hardware and OS, ILOM also tracks and reports the health of key server components. ILOM works closely with POST and Solaris™ Predictive Self Healing technology to keep the system up and running even when there is a faulty component.
- **Power-on self-test (POST)** – POST performs diagnostics on system components upon system reset to ensure the integrity of those components. POST is configurable and works with ILOM to take faulty components offline if needed.
- **Solaris Predictive Self-Healing (PSH)** – This technology continuously monitors the health of the CPU and memory, and works with ILOM to take a faulty component offline if needed. The Predictive Self Healing technology enables Sun™ systems to accurately predict component failures and mitigate many serious problems before they occur.
- **Log files and console messages** – These provide the standard Solaris Operating System (OS) log files and investigative commands that can be accessed and displayed on the device of your choice.

The LEDs, ILOM, Solaris PSH, and many of the log files and console messages are integrated. For example, a fault detected by the Solaris software will display the fault, log it, pass information to ILOM where it is logged, and, depending on the fault, might light one or more LEDs.

TABLE 1-1 Diagnostic Actions

Action No.	Diagnostic Action	Resulting Action	Additional Information
1	Check Power OK and Input OK LEDs on the server.	The Power OK LED is located on the front and rear of the chassis. The Input OK LED is located on the rear of the server on each power supply. If these LEDs are not on, check the power source and power connections to the server.	Section 1.3 "Using the Status Indicators to Identify the State of Devices" on page 1-4
2	Check the Solaris log files for fault information.	The Solaris message buffer and log files record system events and provide information about faults. If system messages indicate a faulty device, replace the FRU.	Section 1.6 "Collecting Information From Solaris OS Files and Commands" on page 1-15
3	Determine if the fault is an environmental fault.	Environmental faults can be caused by faulty FRUs (power supply, fan, or blower), or by environmental conditions such as when computer room ambient temperature is too high, or the server airflow is blocked. When the environmental condition is corrected, the fault will automatically clear.	Section 1.4 "Using the Service Processor Firmware for Diagnosis and Repair Verification" on page 1-11
		If the fault indicates that a fan, blower, or power supply is bad, you can perform a hot-swap of the FRU. You can also use the fault indicators on the server to identify the faulty FRU (fans, blower, and power supplies).	Section 1.3 "Using the Status Indicators to Identify the State of Devices" on page 1-4
4	Determine if the fault was detected by PSH.	If the fault message displays the following text, the fault was detected by the Solaris Predictive Self Healing software: `Host detected fault`	Section 1.5 "Using the Solaris Predictive Self Healing Feature" on page 1-12
		If the fault is a PSH detected fault, identify the faulty FRU from the fault message and replace the faulty FRU. After replacing the FRU, perform the procedure to clear PSH detected faults.	"Clear PSH Detected Faults" on page 1-15
5	Contact Sun for Support.	The majority of hardware faults are detected by the server's diagnostics. In rare cases, a problem might require additional troubleshooting. If you are unable to determine the cause of the problem, contact Sun for support.	Sun Support information: `http://www.sun.com/support`

1.2.1 Memory Fault Handling

The server uses an advanced ECC technology, called chipkill, that corrects up to 4 bits in error on nibble boundaries, as long as all of the bits are in the same DRAM. If a DRAM fails, the FB-DIMM continues to function.

The Predictive Self Healing (PSH) technology in the Solaris OS uses the fault manager daemon (`fmd`) to watch for various kinds of faults. When a fault occurs, the fault is assigned a unique fault ID (UUID), and logged. PSH reports the fault and provides a recommended proactive replacement for the FB-DIMMs associated with the fault.

If you suspect that the server has a memory problem, see Section 3.5 "Replacing FB-DIMMs" on page 3-14 for FB-DIMM replacement instructions. You must perform the instructions in that chapter to clear the faults and enable the replaced FB-DIMMs.

1.3 Using the Status Indicators to Identify the State of Devices

The server provides status indicators in the upper left corner of the front panel (FIGURE 1-1) and on the rear panel (FIGURE 1-2). These indicators provide a visual means of determining the state of the system or individual components.

FIGURE 1-1 Front Panel Status and Alarm Status Indicators

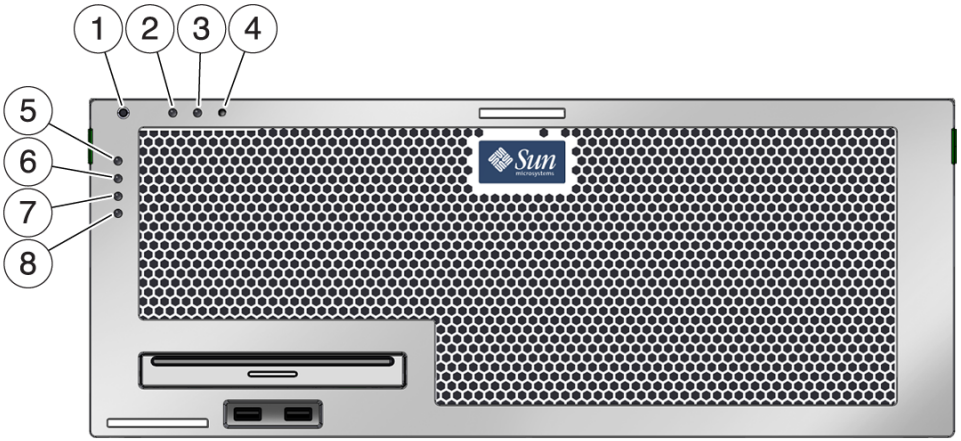

Figure Legend

1	White Locator Indicator and Button	**5**	Red Critical Alarm Indicator
2	Yellow Service Required Indicator	**6**	Red Major Alarm Indicator
3	Green Running Indicator	**7**	Amber Minor Alarm Indicator
4	On/Standby Button	**8**	Amber User Alarm Indicator

FIGURE 1-2 Rear Panel Status Indicators

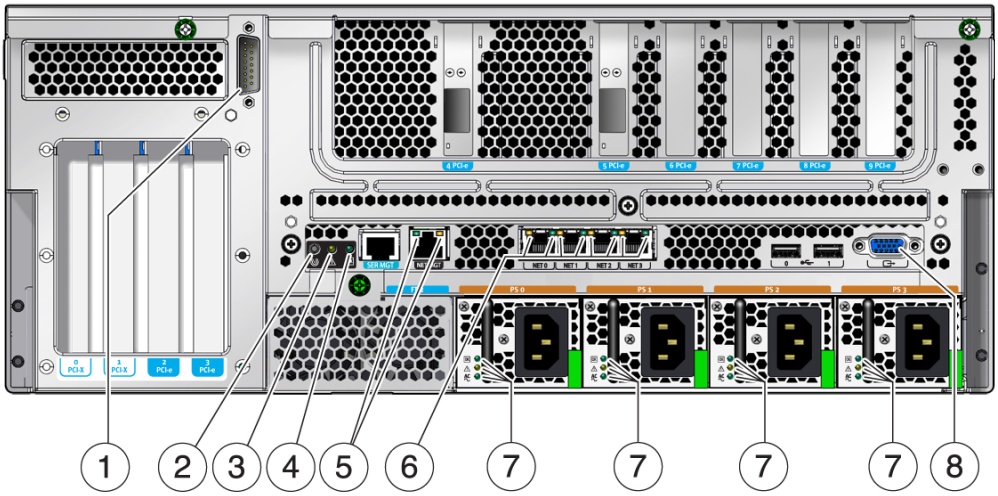

Figure Legend

1	Alarm port	**5**	Management network port indicators
2	White Locator Indicator and button	**6**	Ethernet port indicators
3	Yellow Service Required Indicator	**7**	Power supply indicators
4	Green Running Indicator	**8**	Video port

TABLE 1-2 lists and describes the front and rear panel indicators.

TABLE 1-2 Front and Rear Panel Indicators

LED	Location	Color	Description
Locator Indicator and Button	Front upper left and rear left	White	Enables you to identify a particular server. The LED is activated using one of the following methods: • Issuing the `setlocator on` or `off` command. • Pressing the button to toggle the indicator on or off. This LED provides the following indications: • Off – Normal operating state. • Fast blink – The server received a signal as a result of one of the preceding methods.
Fault Indicator	Front upper center and rear center	Yellow	If on, indicates that service is required.
Activity Indicator	Front upper right and rear right	Green	• On – Drives are receiving power. Solidly on if drive is idle. • Flashing – Drives are processing a command. • Off – Power is off.
Power Button	Front upper right		Turns the host system on and off. This button is recessed to prevent accidental server power-off. Use the tip of a pen to operate this button. Press this button once for a graceful shutdown. Press this button for 4 seconds for an emergency shutdown.
Power OK Indicator	Rear center	Green	Provides the following indications: • Off – The system is unavailable. Either the system has no power or ILOM is not running. • Steady on – Indicates that the system is powered on and is running it its normal operating state. • Standby blink – Indicates that the service processor is running while the system is running at a minimum level in Standby mode, and is ready to be returned to its normal operating state. • Slow blink – Indicates that a normal transitory activity is taking place. The system diagnostics might be running, or the system might be booting.
Critical Alarm Indicator	Front left	Red	Indicates a critical alarm.
Major Alarm Indicator	Front left	Red	Indicates a major alarm.
Minor Alarm Indicator	Front left	Amber	Indicates a minor alarm.
User Alarm Indicator	Front left	Amber	Indicates a user alarm.

1.3.1 Hard Drive Indicators

The hard drive indicators (FIGURE 1-3 and TABLE 1-3) are located on the front of each hard drive that is installed in the server chassis.

FIGURE 1-3 Hard Drive Indicators

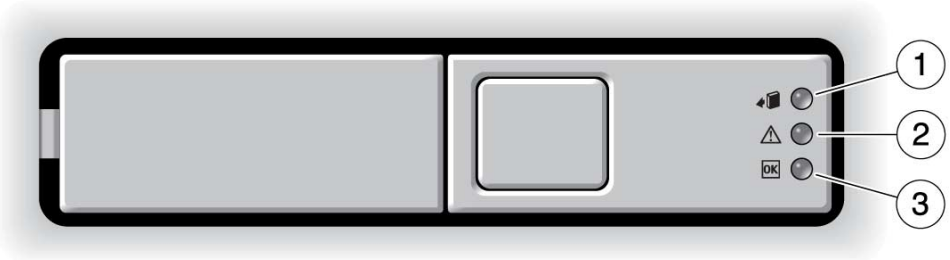

Figure Legend

1	OK to Remove
2	Fault
3	Activity

TABLE 1-3 Hard Drive Indicators

Indicator	Color	Description
OK to Remove	Blue	• On – The drive is ready for hot-plug removal. • Off – Normal operation.
Fault	Amber	• On – The drive has a fault and requires attention. • Off – Normal operation.
Activity	Green	• On – The drive is receiving power. Solidly lit if drive is idle. • Flashing – The drive is processing a command. • Off – Power is off.

1.3.2 Power Supply Indicators

The power supply indicators (FIGURE 1-4 and TABLE 1-4) are located on the rear of each power supply.

FIGURE 1-4 Power Supply Indicators

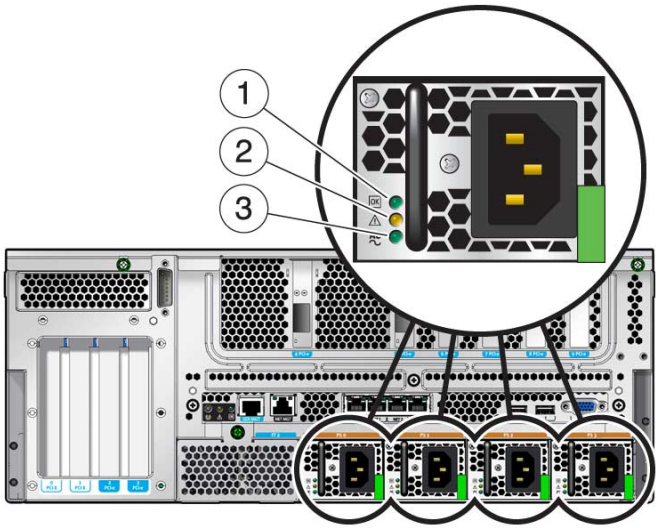

Figure Legend

1	Power OK incdicator
2	Fault indicator
3	Input OK indicator

TABLE 1-4 Power Supply Indicators

Indicator	Color	Description
Power OK	Green	• On – Normal operation. DC output voltage is within normal limits. • Off – Power is off.
Fault	Amber	• On – Power supply has detected a failure. • Off – Normal operation.
Input OK	Green	• On – Normal operation. Input power is within normal limits. • Off – No input voltage, or input voltage is below limits.

1.3.3 Ethernet Port Indicators

The ILOM management Ethernet port and the four 10/100/1000 Mbps Ethernet ports each have two indicators, as shown in FIGURE 1-5 and described in TABLE 1-5.

FIGURE 1-5 Ethernet Port Indicators

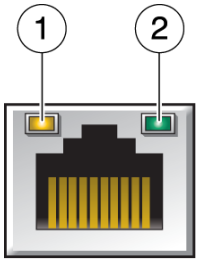

Figure Legend

1	Speed indicator (same location for all Ethernet ports)
2	Link/Activity indicator (Same location for all Ethernet ports)

TABLE 1-5 Ethernet Port Indicators

Indicator	Color	Description
Right indicator	Green	Link/Activity indicator: • Steady On – a link is established. • Blinking – there is activity on this port. • Off – No link is established.
Left Indicator	Amber or Green	Speed indicator: • Amber On – The link is operating as a Gigabit connection (1000-Mbps) • Green On – The link is operating as a 100-Mbps connection. • Off – The link is operating as a 10/100-Mbps connection.

Note – The NET MGT port operates only in 100-Mbps or 10-Mbps so the speed indicator can be green or off (never amber).

1.4 Using the Service Processor Firmware for Diagnosis and Repair Verification

The Sun Integrated Lights Out Manager (ILOM) firmware is a service processor in the server that enables you to remotely manage and administer your server.

ILOM enables you to remotely run diagnostics that would otherwise require physical proximity to the server's serial port. You can also configure ILOM to send email alerts of hardware failures, hardware warnings, and other events related to the server or to ILOM.

Faults detected by ILOM, POST, and the Solaris Predictive Self Healing (PSH) technology are forwarded to ILOM for fault handling. In the event of a system fault, ILOM ensures that the Fault Indicator is lit, the FRU ID PROMs are updated, the fault is logged, and alerts are displayed (faulty FRUs are identified in fault messages using the FRU name).

The service processor detects when a fault is no longer present and clears the fault in several ways:

- Fault recovery – The system automatically detects that the fault condition is no longer present. ILOM extinguishes the Service Required Indicator and updates the FRU's PROM, indicating that the fault is no longer present.
- Fault repair – The fault has been repaired by human intervention. In most cases, the service processor detects the repair and extinguishes the Service Required Indicator. If the service processor does not perform these actions, you must perform these tasks manually.

The service processor also detects the removal of a FRU, in many cases even if the FRU is removed while the service processor is powered off (that is, if the system power cables are unplugged during service procedures). This situation enables ILOM to know that a fault, diagnosed to a specific FRU, has been repaired.

Note – ILOM does not automatically detect hard drive replacement.

Many environmental faults can automatically recover. A temperature that is exceeding a threshold might return to normal limits. An unplugged power supply can be plugged in, and so on. Recovery of environmental faults is automatically detected. Recovery events are reported using one of two forms:

- *fru* `at` *location* `is OK.`
- *sensor* `at` *location* `is within normal range.`

Environmental faults can be repaired through hot-removal of the faulty FRU. FRU removal is automatically detected by the environmental monitoring, and all faults associated with the removed FRU are cleared. The message for that case, and the alert sent for all FRU removals is:

fru `at` *location* `has been removed.`

There is no ILOM command to manually repair an environmental fault.

The Solaris Predictive Self Healing technology does not monitor the hard drive for faults. As a result, the service processor does not recognize hard drive faults, and will not light the fault indicators on either the chassis or the hard drive itself. Use the Solaris message files to view hard drive faults. See Section 1.6 "Collecting Information From Solaris OS Files and Commands" on page 1-15.

1.5 Using the Solaris Predictive Self Healing Feature

The Solaris Predictive Self Healing (PSH) technology enables the server to diagnose problems while the Solaris OS is running, and mitigate many problems before they negatively affect operations.

The Solaris OS uses the fault manager daemon, `fmd(1M)`, which starts at boot time and runs in the background to monitor the system. If a component generates an error, the daemon handles the error by correlating the error with data from previous errors and other related information to diagnose the problem. After diagnosed, the fault manager daemon assigns the problem a Universal Unique Identifier (UUID) that distinguishes the problem across any set of systems. When possible, the fault manager daemon initiates steps to self-heal the failed component and take the component offline. The daemon also logs the fault to the `syslogd` daemon and provides a fault notification with a message ID (MSGID). You can use the message ID to get additional information about the problem from Sun's knowledge article database.

The Predictive Self Healing technology covers the following server components:

- Processor
- Memory
- I/O bus

The PSH console message provides the following information:

- Type
- Severity
- Description
- Automated response
- Impact
- Suggested action for system administrator

If the Solaris PSH facility detects a faulty component, use the `fmdump` command to identify the fault. Faulty FRUs are identified in fault messages using the FRU name.

Note – Additional Predictive Self Healing information is available at: `http://www.sun.com/msg`

1.5.1 Identifying PSH Detected Faults

When a PSH fault is detected, a Solaris OS console message similar to CODE EXAMPLE 1-1 is displayed.

CODE EXAMPLE 1-1 Console Message Showing Fault Detected by PSH

```
SUNW-MSG-ID: SUN4V-8000-DX, TYPE: Fault, VER: 1, SEVERITY: Minor
EVENT-TIME: Wed Sep 14 10:09:46 EDT 2005
PLATFORM: SUNW,Sun-Netra-X4450, CSN: -, HOSTNAME: wgs48-37
SOURCE: cpumem-diagnosis, REV: 1.5
EVENT-ID: f92e9fbe-735e-c218-cf87-9e1720a28004
DESC: The number of errors associated with this memory module has exceeded
acceptable levels.  Refer to http://sun.com/msg/SUN4V-8000-DX for more
information.
AUTO-RESPONSE: Pages of memory associated with this memory module are being
removed from service as errors are reported.
IMPACT: Total system memory capacity will be reduced as pages are retired.
REC-ACTION: Schedule a repair procedure to replace the affected memory module.
Use fmdump -v -u <EVENT_ID> to identify the module.
```

Faults detected by the Solaris PSH facility are also reported through service processor alerts.

Note – The Service Required Indicator is also turned on for PSH diagnosed faults.

▼ Use the `fmdump` Command to Identify Faults

The `fmdump` command displays the list of faults detected by the Solaris PSH facility and identifies the faulty FRU for a particular EVENT_ID (UUID).

Do not use `fmdump` to verify a FRU replacement has cleared a fault because the output of `fmdump` is the same after the FRU has been replaced. Use the `fmadm faulty` command to verify the fault has cleared.

1. **Check the event log using the `fmdump` command with `-v` for verbose output.**

   The output includes the following details:

   - Date and time of the fault (Jul 31 12:47:42.2007)

- Universal Unique Identifier (UUID). This is unique for every fault (`fd940ac2-d21e-c94a-f258-f8a9bb69d05b`)
- Sun message identifier, which can be used to obtain additional fault information (`SUN4V-8000-JA`)
- Faulted FRU. The information provided in the example includes the part number of the FRU (`part=541215101`) and the serial number of the FRU (`serial=101083`). The `Location` field provides the name of the FRU. The FRU name is `MB`, meaning the motherboard.

Note – `fmdump` displays the PSH event log. Entries remain in the log after the fault has been repaired.

---

2. **Use the Sun message ID to obtain more information about this type of fault.**
   a. **In a browser, go to the Predictive Self Healing Knowledge Article web site:** `http://www.sun.com/msg`
   b. **Obtain the message ID from the console output.**
   c. **Enter the message ID in the SUNW-MSG-ID field, and click Lookup.**
3. **Follow the suggested actions to repair the fault.**

▼ Clear PSH Detected Faults

When the Solaris PSH facility detects faults the faults are logged and displayed on the console. In most cases, after the fault is repaired, the corrected state is detected by the system and the fault condition is repaired automatically. However, this must be verified and, in cases where the fault condition is not automatically cleared, the fault must be cleared manually.

1. **After replacing a faulty FRU, power on the server.**
2. **Clear the fault from all persistent fault records.**

   In some cases, even though the fault is cleared, some persistent fault information remains and results in erroneous fault messages at boot time. To ensure that these messages are not displayed, perform the following Solaris OS command:

   `fmadm repair` *UUID*

   For example:

```
# fmadm repair 7ee0e46b-ea64-6565-e684-e996963f7b86
```

1.6 Collecting Information From Solaris OS Files and Commands

With the Solaris OS running on the server, you have the full complement of Solaris OS files and commands available for collecting information and for troubleshooting.

If the service processor or the Solaris PSH features do not indicate the source of a fault, check the message buffer and log files for notifications for faults. Hard drive faults are usually captured by the Solaris message files.

Use the `dmesg` command to view the most recent system message. To view the system messages log file, view the contents of the `/var/adm/messages` file.

▼ Check the Message Buffer

1. **Log in as superuser.**
2. **Type the `dmesg` command:**

```
# dmesg
```

The `dmesg` command displays the most recent messages generated by the system.

▼ View System Message Log Files

The error logging daemon, `syslogd`, automatically records various system warnings, errors, and faults in message files. These messages alert you to system problems such as a device that is about to fail.

The `/var/adm` directory contains several message files. The most recent messages are in the `/var/adm/messages` file. After a period of time (usually every ten days), a new `messages` file is automatically created. The original contents of the `messages` file are rotated to a file named `messages.1`. Over a period of time, the messages are further rotated to `messages.2` and `messages.3`, and then deleted.

1. **Log in as superuser.**
2. **Type:**

```
# more /var/adm/messages
```

3. **If you want to view all logged messages, type:**

```
# more /var/adm/messages*
```

1.7 Additional Service Related Information

In addition to this service manual, the following resources are available to help you keep your server running optimally:

- **Server Product Notes** – Contain late-breaking information about the system including required software patches, updated hardware and compatibility information, and solutions to know issues. The product notes are available online at: `http://docs.sun.com`
- **Solaris Release Notes** – Contain important information about the Solaris OS. The release notes are available online at: `http://docs.sun.com`
- SunSolve™ **Online** – Provides a collection of support resources. Depending on the level of your service contract, you have access to Sun patches, the Sun System Handbook, the SunSolve knowledge base, the Sun Support Forum, and additional documents, bulletins, and related links. Access this site at: `http://sunsolve.sun.com`
- **Predictive Self Healing Knowledge Database** – Provides access to the knowledge article corresponding to a self-healing message by taking the Sun Message Identifier (`SUNW-MSG-ID`) and entering it into the field on this page: `http://www.sun.com/msg`

CHAPTER 2

Preparing for Service

This chapter describes safety considerations and provides prerequisite procedures and information to replace components within the server.

The following topics are included:

2.1 Safety Information

This section describes important safety information you need to know prior to removing or installing parts in the server.

For your protection, observe the following safety precautions when setting up your equipment:

- Follow all Sun standard cautions, warnings, and instructions marked on the equipment and described in *Important Safety Information for Sun Hardware Systems*, 816-7190.
- Ensure that the voltage and frequency of your power source match the voltage and frequency inscribed on the equipment s electrical rating label.
- Follow the electrostatic discharge safety practices as described in this section.

2.1.1 Safety Symbols

The following symbols might appear in this book, note their meanings:

Caution – There is a risk of personal injury and equipment damage. To avoid personal injury and equipment damage, follow the instructions.

Caution – Hot surface. Avoid contact. Surfaces are hot and might cause personal injury if touched.

Caution – Hazardous voltages are present. To reduce the risk of electric shock and danger to personal health, follow the instructions.

2.1.2 Electrostatic Discharge Safety

Electrostatic discharge (ESD) sensitive devices, such as the motherboard, PCI cards, hard drives, and memory cards require special handling.

Caution – The boards and hard drives contain electronic components that are extremely sensitive to static electricity. Ordinary amounts of static electricity from clothing or the work environment can destroy components. Do not touch the components along their connector edges.

2.1.2.1 Use an Antistatic Wrist Strap

Wear an antistatic wrist strap and use an antistatic mat when handling components such as drive assemblies, boards, or cards. When servicing or removing server components, attach an antistatic strap to your wrist and then to a metal area on the chassis. Then disconnect the power cords from the server. Following this practice equalizes the electrical potentials between you and the server.

2.1.2.2 Use an Antistatic Mat

Place ESD-sensitive components such as the motherboard, memory, and other PCB cards on an antistatic mat.

2.2 Required Tools

The server can be serviced with the following tools:

- Antistatic wrist strap
- Antistatic mat
- No. 2 Phillips screwdriver

2.3 Preparing for Component Replacement

Before you can remove and install components that are inside the server, you must prepare the server for service.

Note – When replacing the hard drives or power supplies, not all of these tasks are necessary. The replacement procedures for those components address this fact.

▼ Power Off the Server

Performing a graceful shutdown makes sure all of your data is saved and the system is ready for restart.

1. **Log in as superuser or equivalent.**

   Depending on the nature of the problem, you might want to view the system status, the log files, or run diagnostics before you shut down the system. Refer to the administration documentation for log file information.

2. **Notify affected users.**

   Refer to your administration documentation for additional information.

3. **Save any open files, and quit all running programs.**

   Refer to your application documentation for specific information on these processes.

4. **Shut down the operating system.**

   Refer to the operating system documentation for additional information.

5. **Shut down the server.**

   You can shut down the server from the CLI, or you can use the Power button on the front of the server to initiate a graceful system shutdown. This button is recessed to prevent accidental server power-off. Use the tip of a pen to operate this button.

▼ Disconnect the Cables From the Server

Caution – The system supplies standby power to the circuit boards even when the system is powered off.

1. **Label all of the cables connected to the server.**
2. **Disconnect the following cables as appropriate:**
   - PCI cards
   - Alarm
   - TTYA
   - SER MGT
   - NET MGT
   - USB ports
   - Network ports
   - Power supplies

▼ Remove the Server From the Rack

Remove the server from the rack prior to performing cold-swappable replacement procedures.

Caution – The server weighs approximately 64 lbs (32 kg). Two people are required to dismount and carry the chassis.

1. **Remove the server from the rack.**

   The steps to remove the server from the rack depend on the mounting kit. For sliding mounting kits, you can simply release the slides to remove the server. For hardmount kits, you must remove the securing screws from the front and rear brackets.

2. **Set the server on a sturdy work surface.**

3. **Prepare an antistatic surface on which to set parts during removal and installation.**

   Place ESD-sensitive components such as the printed circuit boards on an antistatic mat. The following items can be used as an antistatic mat:

   - Antistatic bag used to wrap a Sun replacement part
   - Sun ESD mat, part number 250-1088
   - Disposable ESD mat (shipped with some replacement parts or optional system components)

4. **Attach an antistatic wrist strap.**

   When servicing or removing server components, attach an antistatic strap to your wrist and then to a metal area on the chassis.

▼ Remove the Top Cover

All components that are not hot-swappable require the removal of the top cover.

1. **Use a No. 2 Philips screwdriver to release the two captive screws (FIGURE 2-1).**

FIGURE 2-1 Top Cover Removal

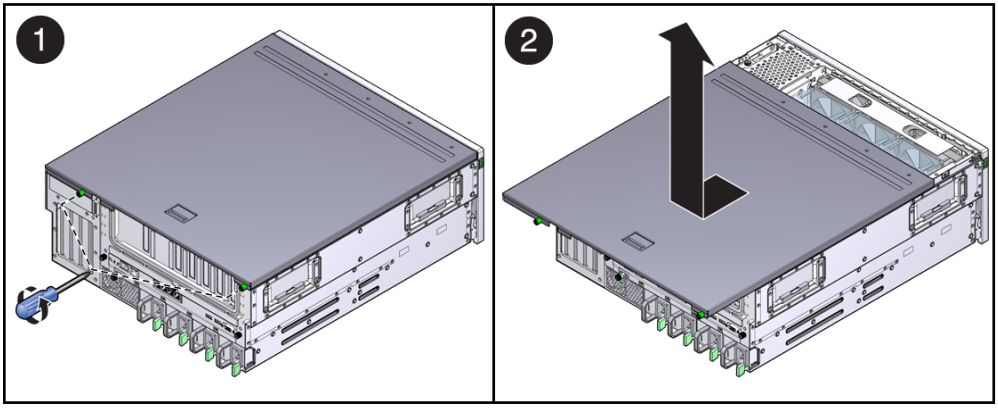

2. **While pressing the top cover release button, slide the cover toward the rear of the server.**

3. **Lift the cover off the chassis, and set it aside.**

▼ Remove the Air Baffle

The removal of the air baffle is necessary only if you are servicing the following components:

- Memory mezzanine or memory riser cards
- Motherboard
- Power distribution board
- System/alarm LED board

1. **Lift the air baffle.**
2. **Push on one side of the baffle, and remove the hinge peg from the chassis.**

FIGURE 2-2 Removing the Air Baffle

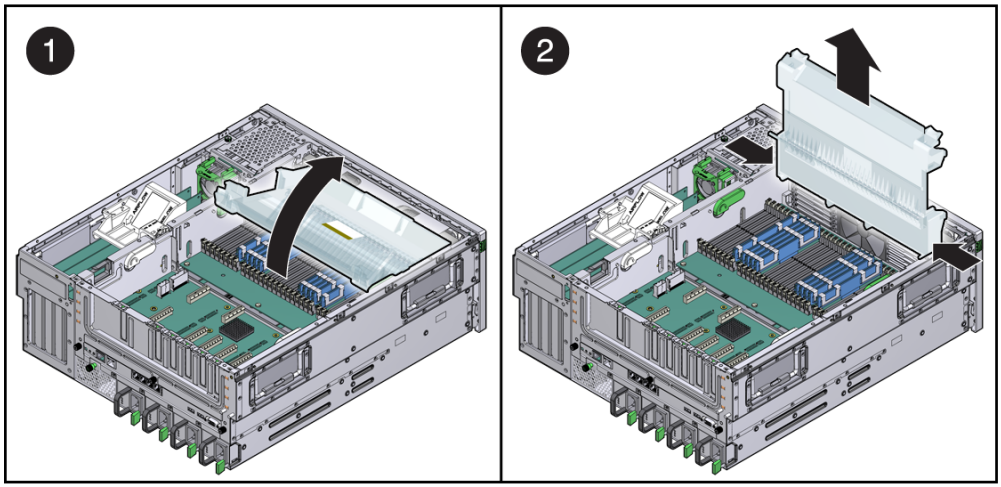

▼ Remove the Memory Mezzanine

The removal of the memory mezzanine is necessary only if you are servicing the following components:

- Memory riser cards
- Motherboard
- Power distribution board

1. **Lift the memory mezzanine levers at the same time.**

FIGURE 2-3 Removing the Memory Mezzanine

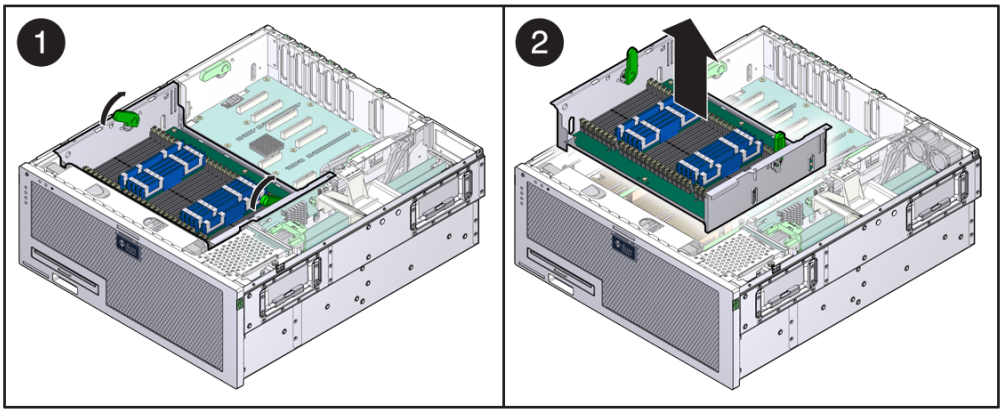

Caution – One or more of the memory riser cards beneath the memory mezzanine might remain attached to the bottom of the mezzanine. Therefore, be careful when you remove the mezzanine.

---

2. **Lift the memory mezzanine out of the chassis.**

▼ Remove the PCI Mezzanine

Removal of the PCI mezzanine is necessary only if you are servicing the following components:

- PCI riser card
- Motherboard
- Power distribution board

1. **Disconnect the three system cables that are connected to the PCI mezzanine board (FIGURE 2-4).**

FIGURE 2-4 Removing the PCI Mezzanine

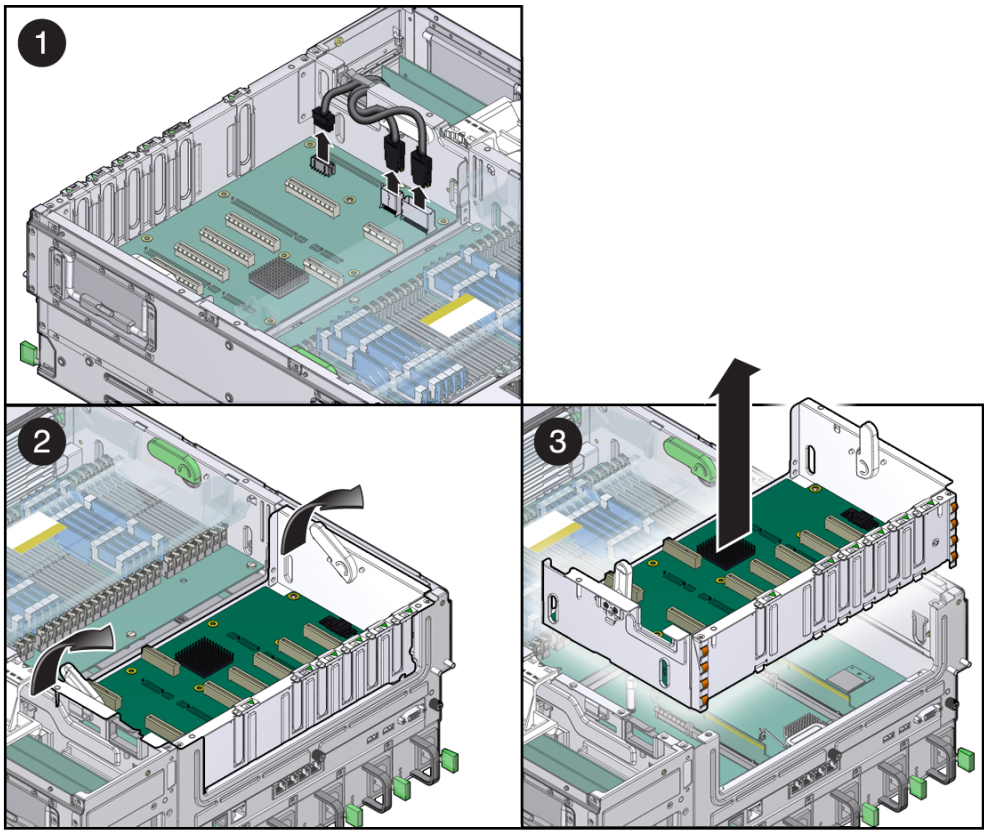

2. **Lift the two securing handles on PCI mezzanine.**
3. **Lift the PCI mezzanine up and out the chassis, and place it on an antistatic mat.**

Caution – One or more of the PCI riser cards beneath the PCI mezzanine might remain attached to the bottom of the mezzanine. Therefore, be careful when you remove the mezzanine.

CHAPTER 3

Replacing Components

This chapter provides instructions for replacing the server components.

The following topics are included:

3.1 Replacing the Air Filter

Use the procedures in this section to install a new air filter or to remove the air filter for cleaning.

▼ Remove the Air Filter

1. **Press the green tabs on both sides of the bezel, and pull the bezel forward and down (**FIGURE 3-2**).**

Caution – Do not open the bezel on a flat surface. The front of the server must be hanging over the edge of a flat surface to avoid damaging the bezel hinges.

FIGURE 3-1 Opening the Bezel

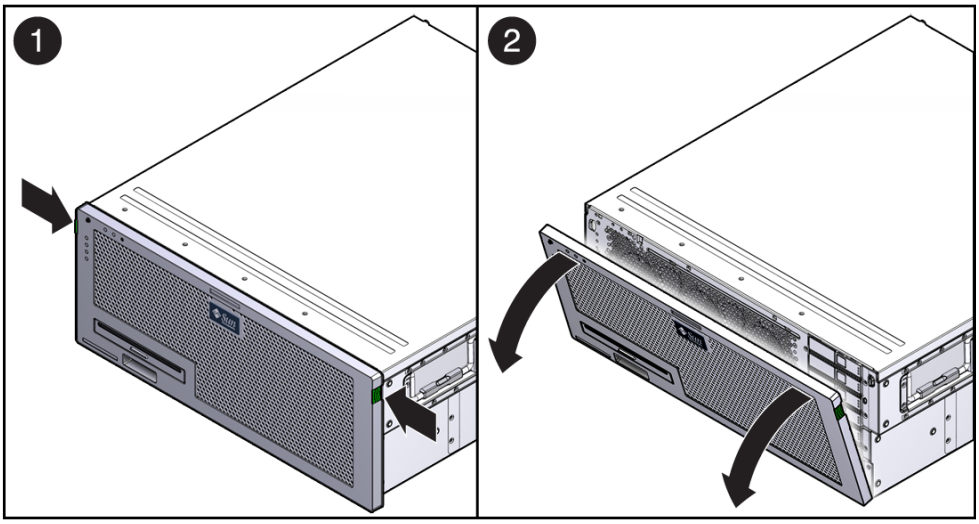

2. **Grasp the tabs, and lift the air filter from the bezel (**FIGURE 3-2**).**

FIGURE 3-2 Removing the Air Filter

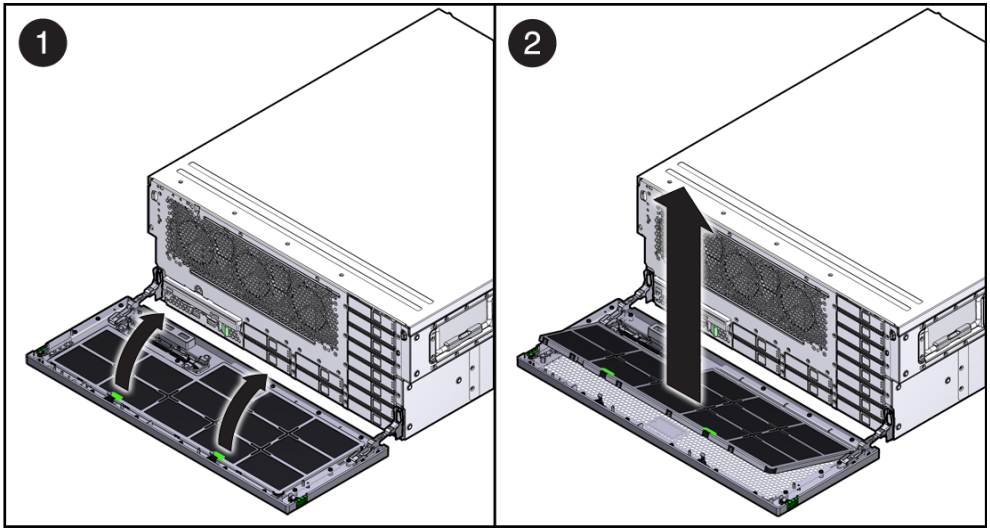

Note – Do not operate the server without an air filter.

▼ Install the Air Filter

1. **Remove the replacement air filter from its packaging.**
2. **Insert the air filter into the bezel (**FIGURE 3-3**).**

FIGURE 3-3 Installing the Air Filter

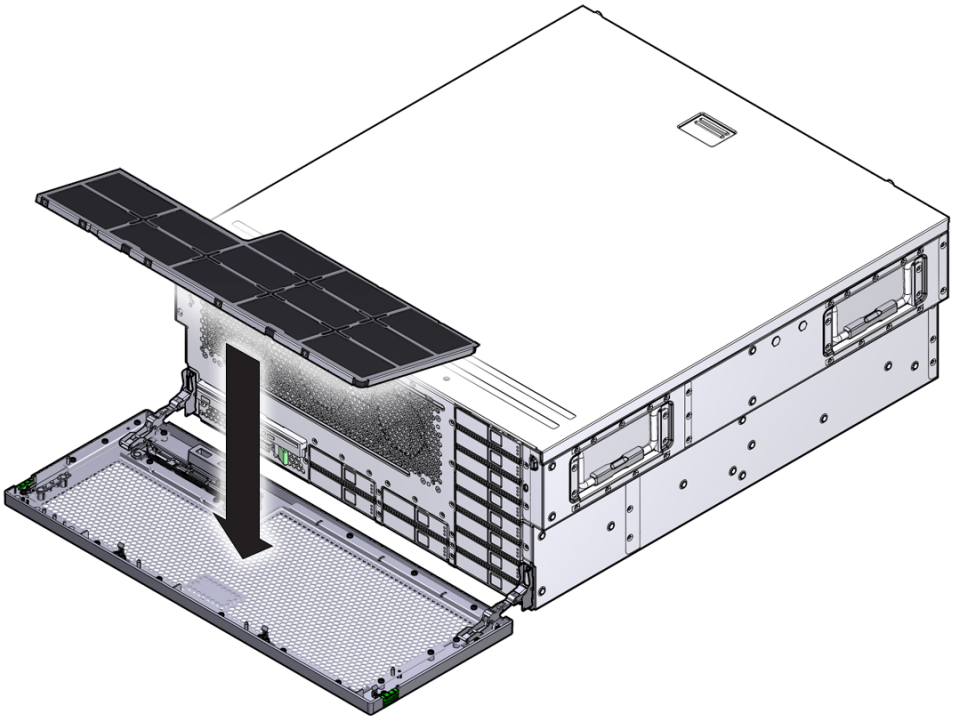

3. **Close the bezel.**

3.2 Replacing a Power Supply

The server's redundant hot-swappable power supplies enable you to remove and replace one or two power supplies without shutting the server down, provided that the other power supplies are online and working.

If a power supply fails and you do not have a replacement available, leave the failed power supply installed to ensure proper air flow in the server.

▼ Remove a Power Supply

1. **Identify which power supply requires replacement.**

   A lighted amber indicator on a power supply indicates that a failure was detected.

2. **Disconnect the power cord from the faulty power supply.**

3. **Grasp the power supply handle, and push the power supply latch to the right (**FIGURE 3-4**).**

FIGURE 3-4 Removing the Power Supply

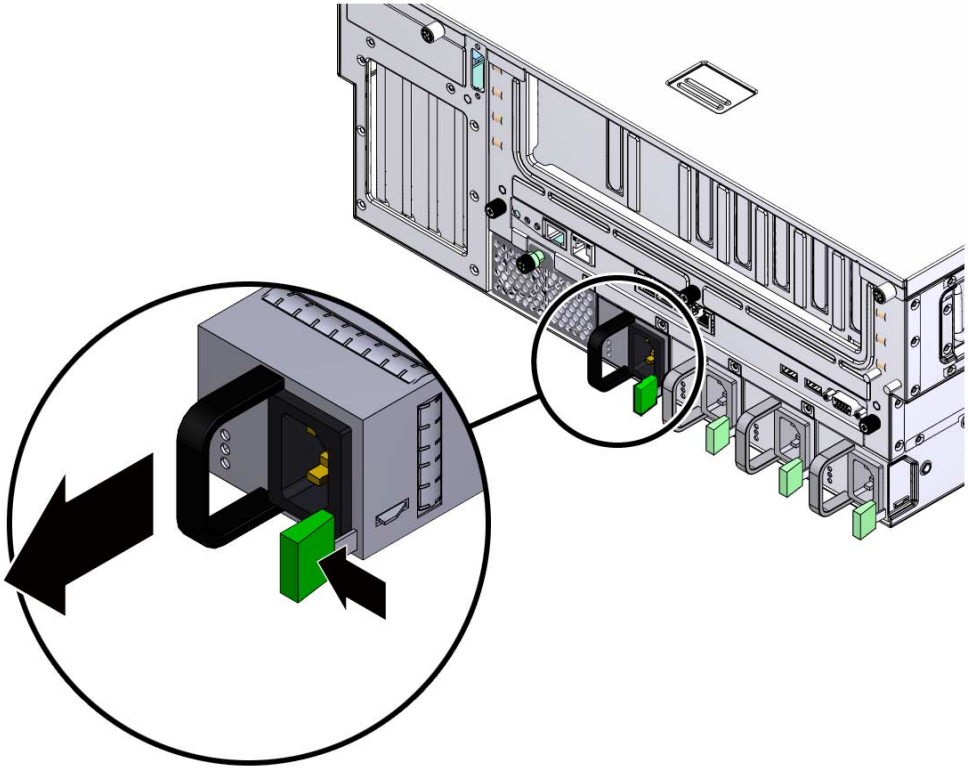

4. **Pull the power supply out of the chassis.**

▼ Install a Power Supply

1. **Remove the replacement power supply from its packaging, and place the power supply on an antistatic mat.**
2. **Slide the power supply into bay until it is fully seated (**FIGURE 3-5**).**

FIGURE 3-5 Installing a Power Supply

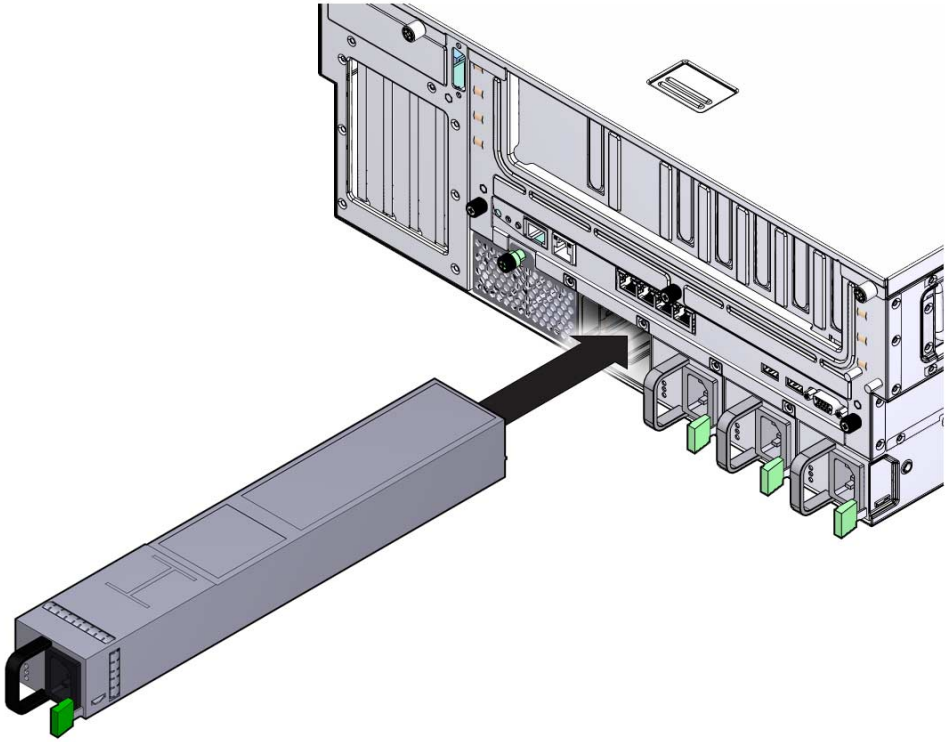

3. **Reconnect the power cord to the power supply.**
4. **Verify that the amber indicator on the replaced power supply and that the Service Required Indicators are not lit.**

3.3 Replacing a Hard Drive

The hard drives in the server are hot-pluggable, but this capability depends on how the hard drives are configured. To hot-plug a drive, you must be able to take the drive offline by preventing any applications from accessing the drive and removing the logical software links to the drive.

The following situations inhibit the ability to perform hot-plugging of a drive:

- The hard drive provides the operating system, and the operating system is not mirrored on another drive.
- The hard drive cannot be logically isolated from the online operations of the server.

If your drive falls into one of these conditions, you must shut the system down before you replace the hard drive.

Note – Replacing a hard drive does not require removing the server from a rack.

▼ Remove a Hard Drive

If the drive you want to remove cannot be hot-plugged, perform the tasks in Chapter 2 before you perform the steps in this procedure.

1. **Open the bezel (**FIGURE 3-6**).**

Caution – Do not open the bezel on a flat surface. The front of the server must be hanging over the edge of a flat surface to avoid damaging the bezel hinges.

FIGURE 3-6 Opening the Bezel

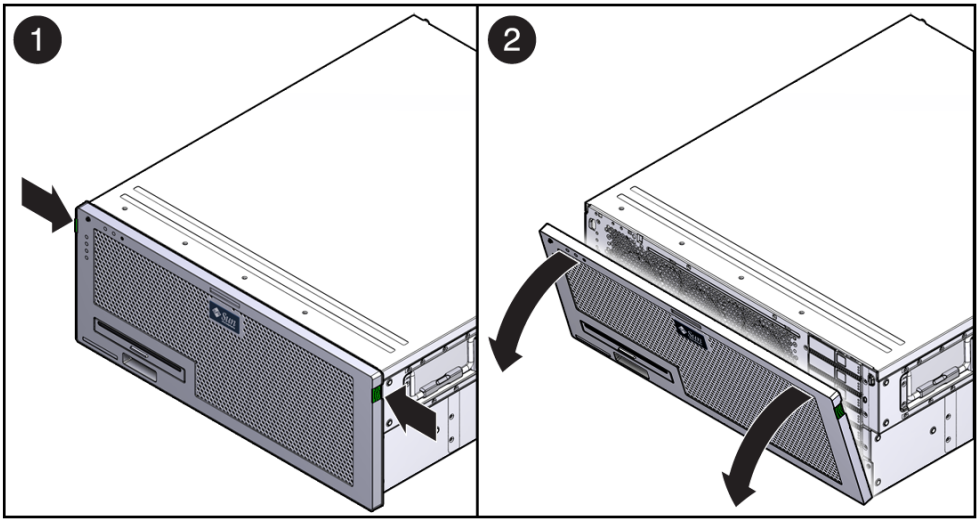

2. **Type the Solaris OS commands required to stop using the hard drive.**

   Exact commands required depend on the configuration of your hard drives. You might need to unmount file systems or perform RAID commands.

3. **On the drive you plan to remove, push the latch release button (**FIGURE 3-7**).**

FIGURE 3-7 Removing a Hard Drive

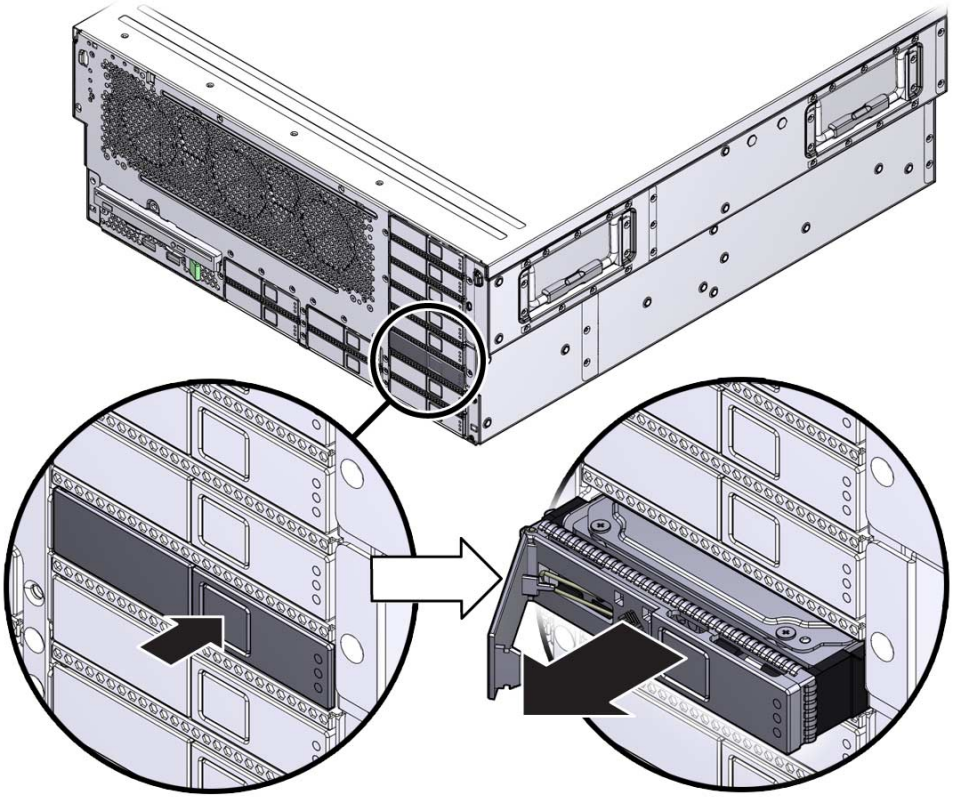

Caution – The latch is not an ejector. Do not bend it too far to the left. Doing so can damage the latch.

4. **Grasp the latch, and pull the drive out of the drive slot.**

▼ Install a Hard Drive

1. **Remove the replacement hard drive from its packaging, and place it on an antistatic mat.**

2. **Align the replacement drive to the drive slot.**

   The hard drive is physically addressed according to the slot in which it is installed. It is important to install a replacement drive in the same slot as the drive that was removed.

3. **Slide the drive into the bay until it is fully seated (**FIGURE 3-8**).**

FIGURE 3-8 Installing a Hard Drive

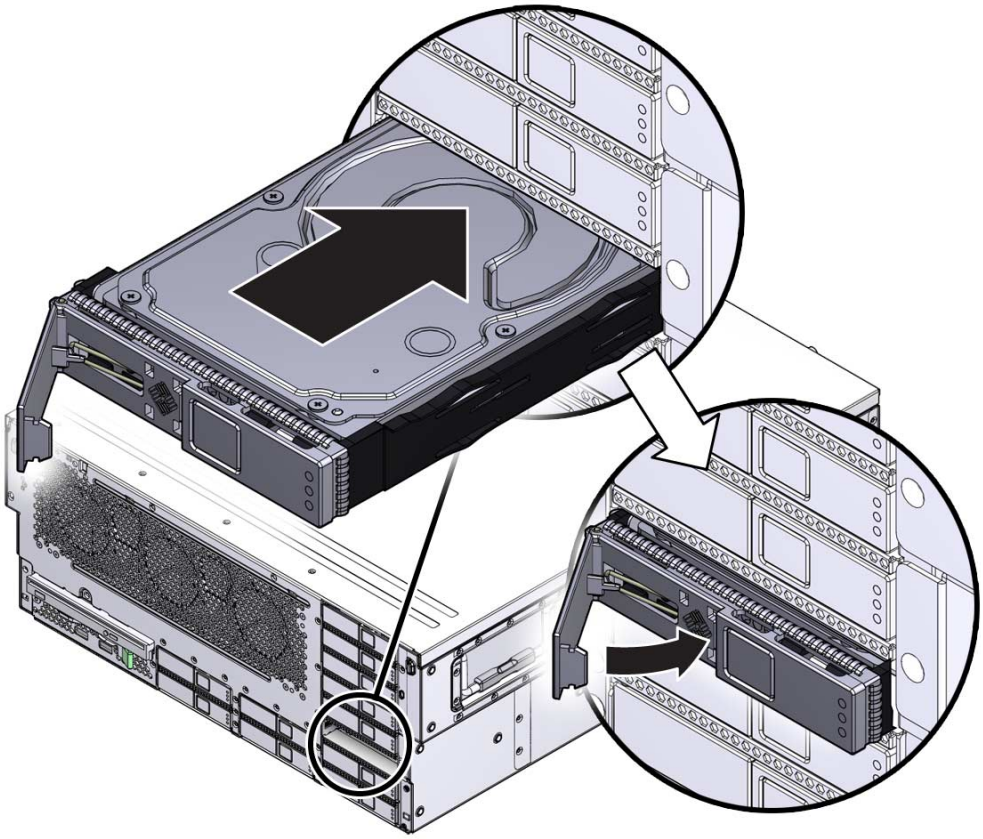

4. **Close the latch to lock the drive in place.**

5. **Close the bezel.**

6. **Perform administrative tasks to reconfigure the hard drive.**

   The procedures that you perform at this point depend on how your data is configured. You might need to partition the drive, create file systems, load data from backups, or have it updated from a RAID configuration.

3.4 Replacing the Optical Media Drive

The optical media drive in the server is not hot-pluggable. You cannot remove it while the system is running.

▼ Remove the Optical Media Drive

1. **Prepare the server for optical media drive removal.**

   See Chapter 2.

2. **Open the bezel.**

Caution – Do not open the bezel on a flat surface. The front of the server must be hanging over the edge of a flat surface to avoid damaging the bezel hinges.

3. **Push the release tab to the left, and pull the probe forward, freeing the optical media drive (**FIGURE 3-9**).**

FIGURE 3-9 Releasing the Optical Media Drive

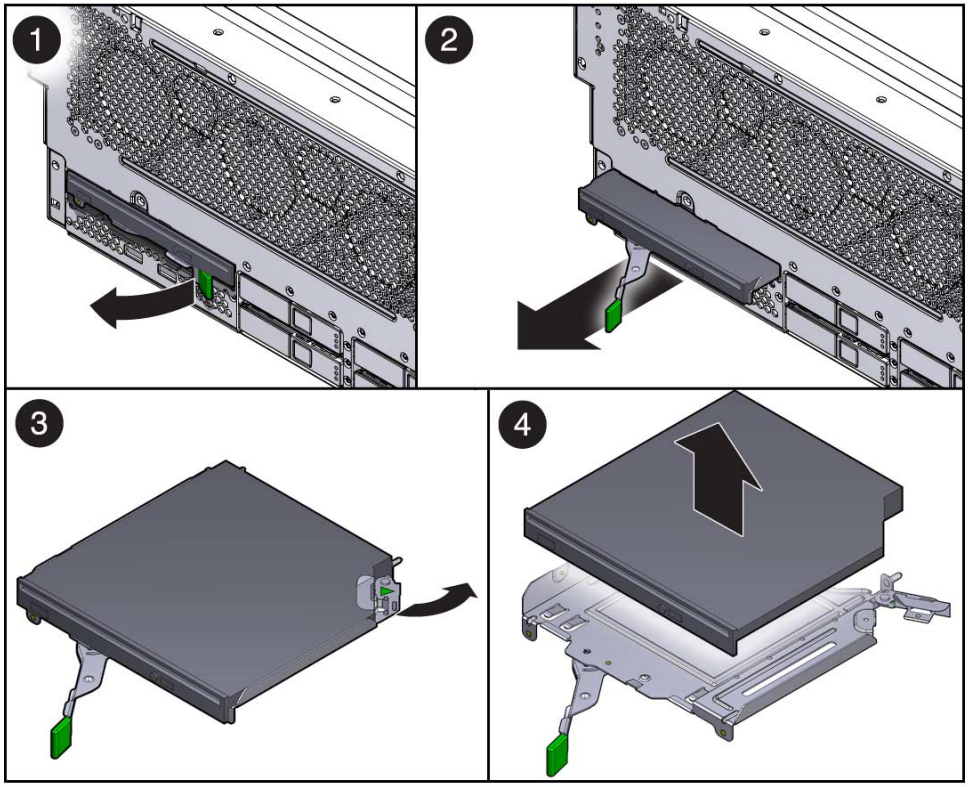

4. **Remove the optical media drive from server, and set it aside on an antistatic mat.**

▼ Install the Optical Media Drive

1. **Remove the replacement optical media drive from its packaging, and place it on an antistatic mat.**
2. **Hold the tab to the left, and insert the optical media drive into the chassis (**FIGURE 3-10**).**

FIGURE 3-10 Inserting the Optical Media Drive

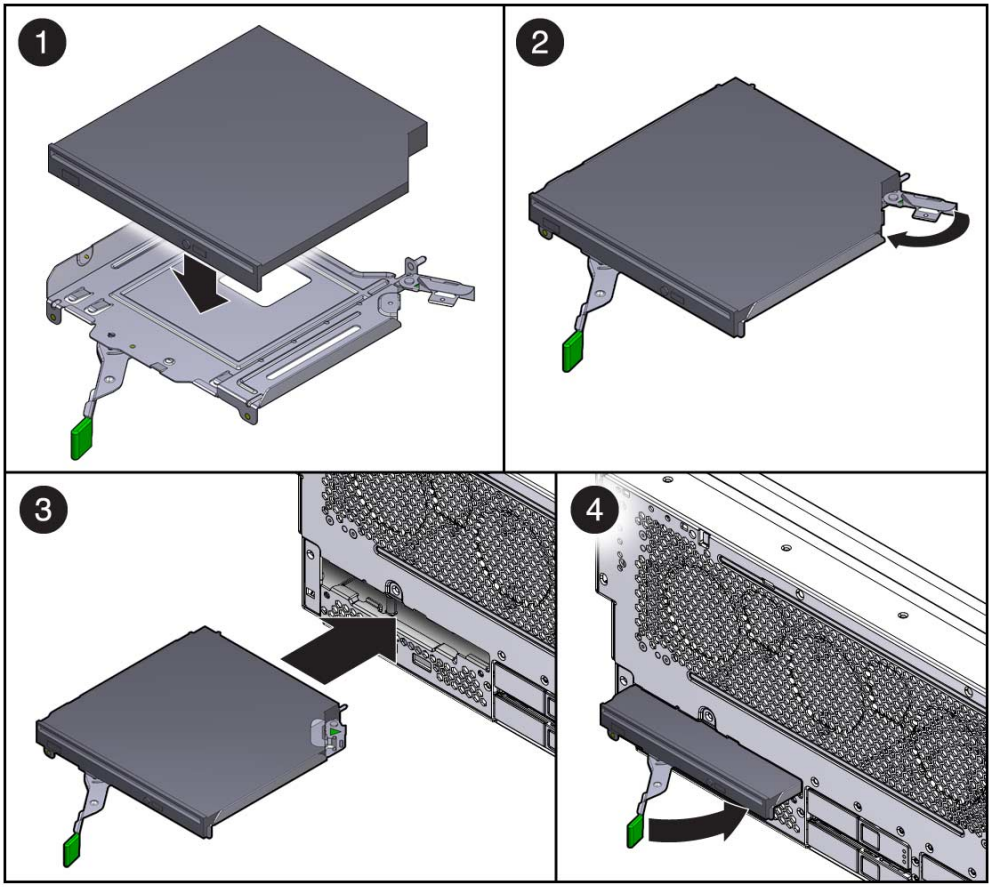

3. **Press the optical media drive in until it seats, and release the tab.**
4. **Close the bezel.**
5. **Consider your next step:**
   - If you installed the optical media drive as part of another procedure, return to that procedure.
   - Otherwise, perform the tasks needed to bring the server back online.

     See Chapter 4.

3.5 Replacing FB-DIMMs

Use the FB-DIMM configuration rules to help you plan the memory configuration of your server. There are 32 slots that hold industry-standard FB-DIMM memory modules. General rules are:

- FB-DIMMs must be installed in identical pairs (that is, the same size, speed, and organization).
- A replacement FB-DIMM must have the same part number as the other FB-DIMM in its pair. If you are unable to obtain a matching FB-DIMM, you must replace both FB-DIMMs in the pair.
- FB-DIMM pairs must be installed in the following slot order: A0/B0, C0/D0, A1/B1, then C1/D1.
- FB-DIMM capacities can be different between slots. For example, you can install a pair of 2-GB FB-DIMMs in slots A0 or B0 and a pair of 1-GB FB-DIMMs in slots C0 or D0.
- Highest capacity FB-DIMMs must be installed in the lowest numbered slots. For instance, if you have four 4-GB FB-DIMMs and four 2-GB FB-DIMMs, you must install the 4-GB FB-DIMMs in slots A0/B0 and C0/D0, and you must install the 2-GB FB-DIMMs in slots A1/B1 and C1/D1.

Caution – Ensure that all power is removed from the server before removing or installing FB-DIMMs. You must disconnect the power cables before performing this procedure.

FIGURE 3-11 FB-DIMM Layout for Branch 0

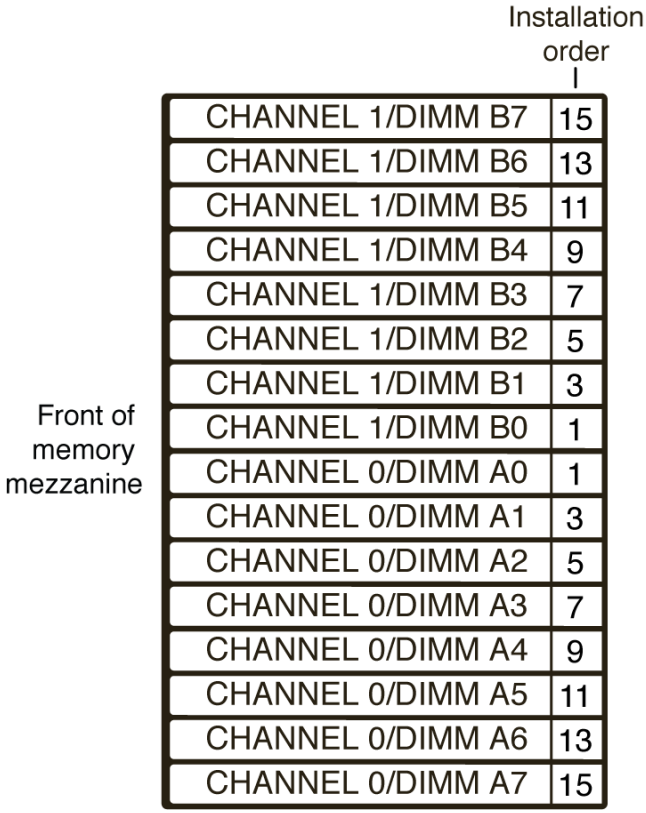

FIGURE 3-12 FB-DIMM Layout for Branch 1

Front of memory mezzanine

	Installation order
CHANNEL 3/DIMM D7	16
CHANNEL 3/DIMM D6	14
CHANNEL 3/DIMM D5	12
CHANNEL 3/DIMM D4	10
CHANNEL 3/DIMM D3	8
CHANNEL 3/DIMM D2	6
CHANNEL 3/DIMM D1	4
CHANNEL 3/DIMM D0	2
CHANNEL 2/DIMM C0	2
CHANNEL 2/DIMM C1	4
CHANNEL 2/DIMM C2	6
CHANNEL 2/DIMM C3	8
CHANNEL 2/DIMM C4	10
CHANNEL 2/DIMM C5	12
CHANNEL 2/DIMM C6	14
CHANNEL 2/DIMM C7	16

Note – FB-DIMM names in ILOM messages are displayed with the full FRU name, such as `/SYS/MB/CMP0/BR0/CH0/D0`.

Caution – Always perform antistatic measures by using a wrist strap and an antistatic mat for handling and storing removable components.

▼ Locate a Faulty FB-DIMM

The system Service Required Indicator lights if the system detects a FB-DIMM fault. See Section 1.2.1 "Memory Fault Handling" on page 1-4.

1. **Prepare the server for FB-DIMM removal.**

   See Chapter 2.

2. **Press the FB-DIMM fault locator button.**

   The button is located on the left edge of the memory mezzanine.

3. **Note the location of faulty FB-DIMMs.**

   Faulty FB-DIMMs are identified with a corresponding amber indicator.

Note – The FB-DIMM fault indicator remains lit only for a few minutes.

---

4. **Ensure that all FB-DIMMs are seated correctly in their slots.**

▼ Remove FB-DIMMs

1. **If you have not already done so, prepare the server for FB-DIMM removal.**

   See Chapter 2.

2. **Push down on the ejector tabs on each side of the FB-DIMM until the FB-DIMM is released (**FIGURE 3-13**).**

FIGURE 3-13 Removing FB-DIMMs

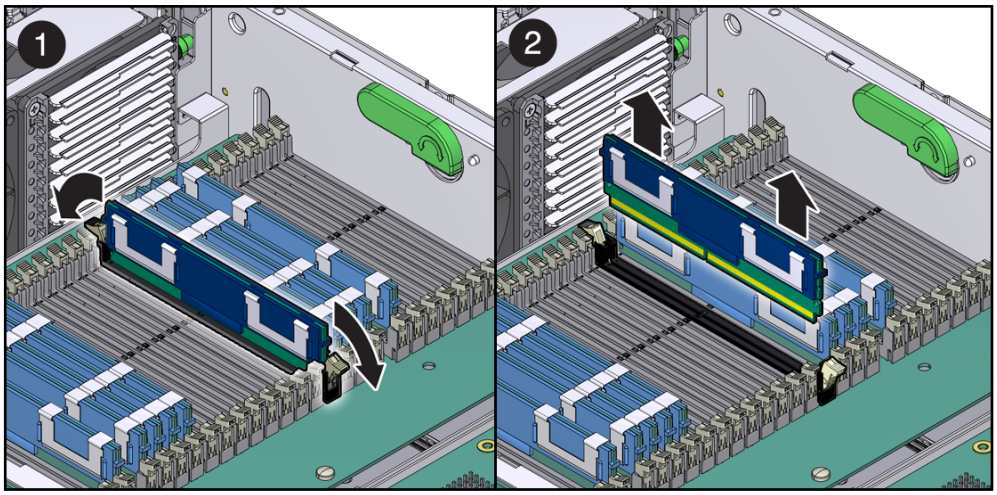

3. **Grasp the top corners of the faulty FB-DIMM, and remove it from the memory mezzanine.**
4. **Place the FB-DIMM on an antistatic mat.**
5. **Repeat** Step 2 **through** Step 4 **to remove any additional FB-DIMMs.**

▼ Install FB-DIMMs

Caution – Ensure that all power is removed from the server before removing or installing FB-DIMMs or damage to the FB-DIMMs might occur. You must disconnect the power cables from the system before performing this procedure.

---

1. **If you are adding memory, prepare the server for service.**

   See Chapter 2.
2. **Unpackage the FB-DIMMs, and place them on an antistatic mat.**
3. **Ensure that the ejector tabs are in the open position.**
4. **Line up the replacement FB-DIMM with the connector (**FIGURE 3-14**).**

   Align the FB-DIMM notch with the key in the connector. This ensures that the FB-DIMM is oriented correctly.

FIGURE 3-14 Inserting an FB-DIMM Into a Slot

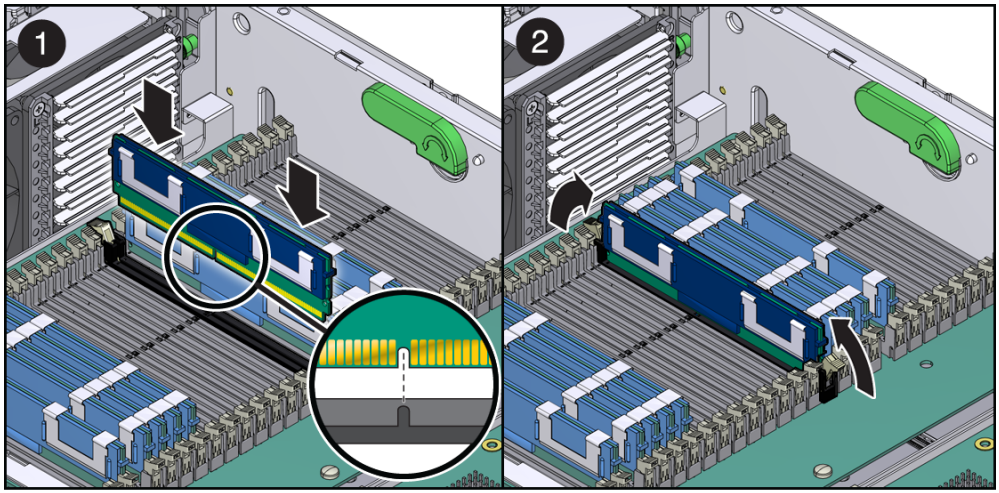

5. **Push the FB-DIMM into the connector until the ejector tabs lock the FB-DIMM in place.**

   If the FB-DIMM does not easily seat into the connector, verify that the orientation of the FB-DIMM is as shown in FIGURE 3-14. If the orientation is reversed, damage to the FB-DIMM might occur.

6. **Repeat Step 3 through Step 5 until all replacement FB-DIMMs are installed.**

7. **Consider your next step:**

   - If you installed FB-DIMMs as part of another procedure, return to that procedure.
   - If you are only installing FB-DIMMs, see Chapter 4 for the tasks needed to bring the server back online.

3.6 Replacing System Fan 0

System fan 0 is labeled FT0 and is located at the front of the chassis.

▼ Remove System Fan 0

1. **Prepare the server for fan assembly removal.**

   See Chapter 2.

2. **Insert your forefinger and thumb into the holes at the top of the fan assembly, squeeze them together, and lift the fan assembly from the chassis (**FIGURE 3-15**).**

FIGURE 3-15 Lifting System Fan 0 From the Chassis

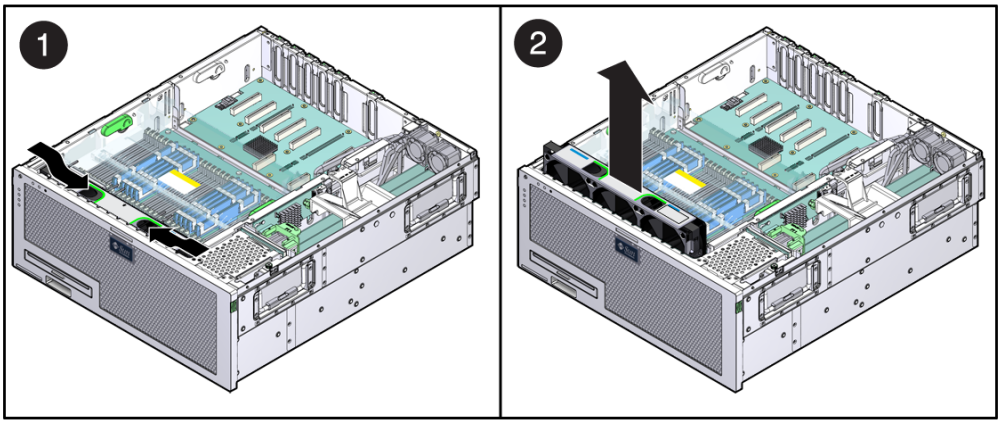

3. **Set the fan assembly on an antistatic mat.**

4. **Consider your next step:**

   - If you removed the fan assembly as part of another procedure, return to that procedure.
   - Otherwise, continue to "Install System Fan 0" on page 3-21.

▼ Install System Fan 0

1. **Remove the replacement fan assembly from its packaging, and place it on an antistatic mat.**

2. **Insert your forefinger and thumb into the holes at the top of the fan assembly, squeeze them together, and lower the fan assembly into the chassis (FIGURE 3-16).**

FIGURE 3-16 Installing System Fan 0 Into the Chassis

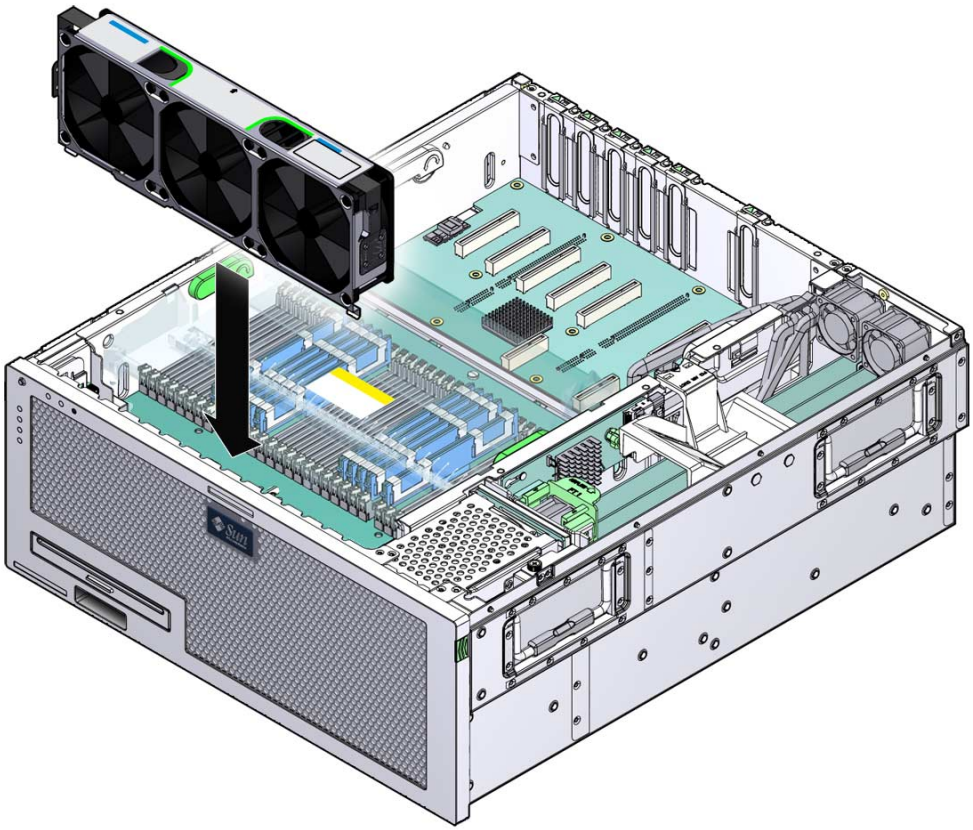

3. **Consider your next step:**
   - If you installed the fan assembly as part of another procedure, return to that procedure.
   - Otherwise, see Chapter 4 to perform the tasks needed to bring the server back online.

3.7 Replacing System Fan 1

System fan 1 is labeled FT1 and is located directly behind the hard drive stack.

▼ Remove System Fan 1

1. **Prepare the server for fan removal.**
   See Chapter 2.
2. **Slide the bracket forward, and lift the fan assembly out (**FIGURE 3-17**).**

FIGURE 3-17 Lifting Out System Fan 1

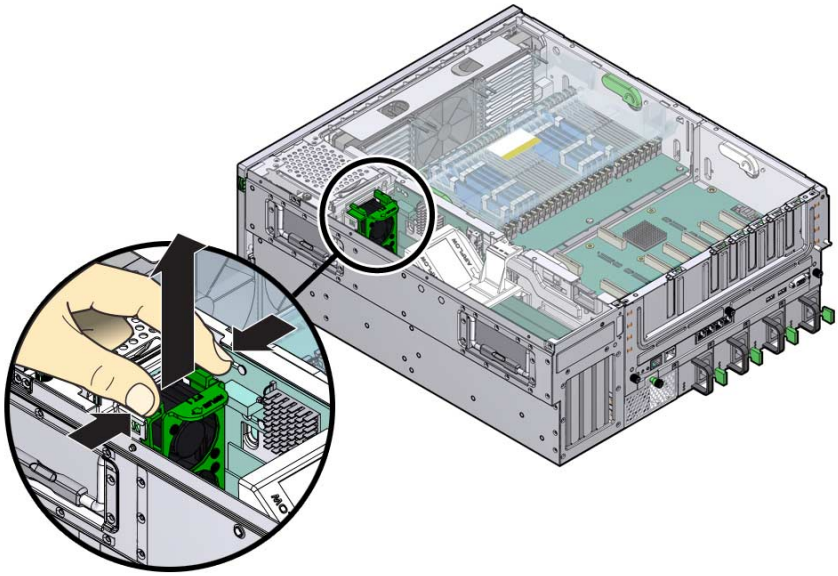

3. **Set the fan aside on an antistatic mat.**
4. **Continue to** "Install System Fan 1" on page 3-23**.**

▼ Install System Fan 1

1. **Remove the replacement fan assembly from its packaging, and place it on an antistatic mat.**
2. **Lower the fan assembly into the chassis, and press it down until the brackets seat properly (**FIGURE 3-18**).**

FIGURE 3-18 Installing System Fan 1

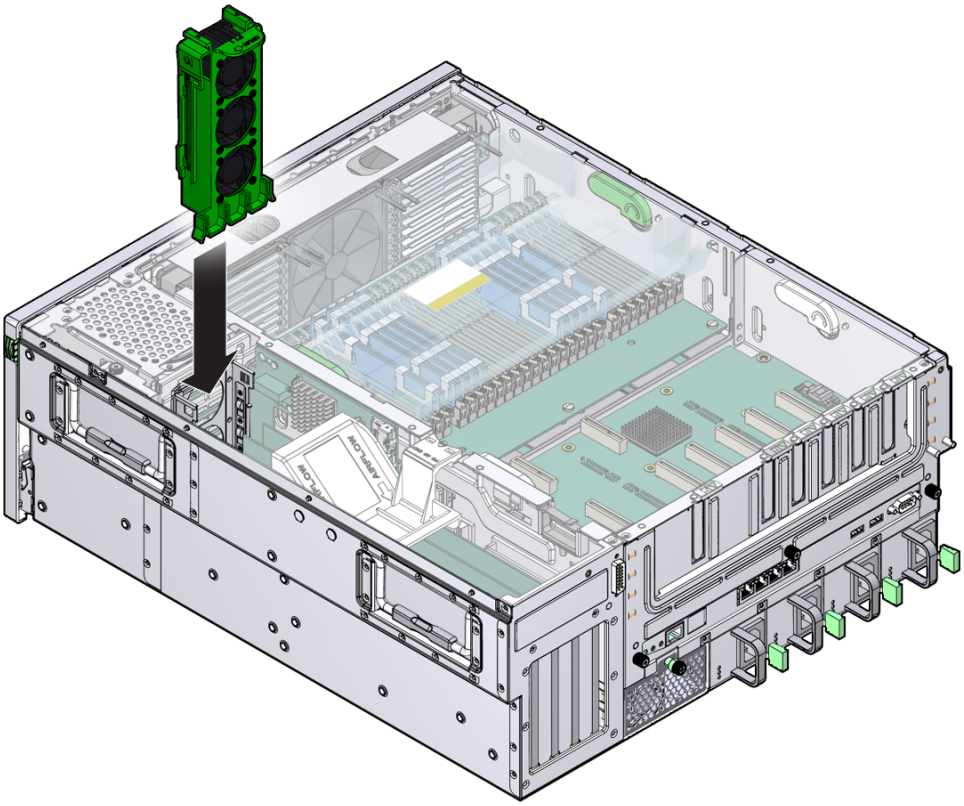

3. **See** Chapter 4 **to perform the tasks needed to bring the server back online.**

3.8 Replacing System Fan 2

System fan 2 is labeled FT2 and is located at the rear of the chassis.

▼ Remove System Fan 2

1. **Prepare the server for fan removal.**

   See Chapter 2

2. **Untighten the captive screw on the fan assembly housing, and pull the housing out of the chassis (**FIGURE 3-18**).**

FIGURE 3-19 System Fan 2 Removal

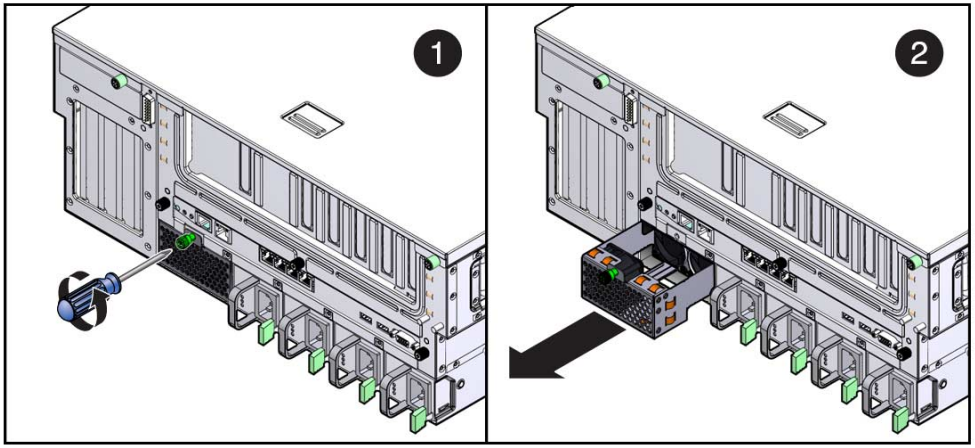

3. **Set the fan assembly on an antistatic mat.**

4. **Continue to** "Replacing System Fan 1" on page 3-22**.**

▼ Install System Fan 2

1. **Remove the replacement fan assembly from its packaging, and place it on an antistatic mat.**

2. **Slide the fan assembly housing into the chassis until it is fully seated.**

3. **Tighten the captive screw on the housing.**

4. **See** Chapter 4 **to perform the tasks needed to bring the server back online.**

3.9 Replacing PCI Cards

The PCI mezzanine secures the PCI cards into place with green PCI card retainers and captive (nonremovable) securing screws.

3.9.1 Replace PCI-X and PCIe Cards in Slots 0-3

Note – The maximum power of any one PCI card is 25 watts. Only slots 0-3 accept long cards.

▼ Remove PCI-X and PCIe Cards in Slots 0-3

1. **Prepare the server for PCI card removal.**

   See Chapter 2.

2. **Remove the PCI air baffle (**FIGURE 3-21**).**

FIGURE 3-20 Removing a PCI Card From Slots 0-3

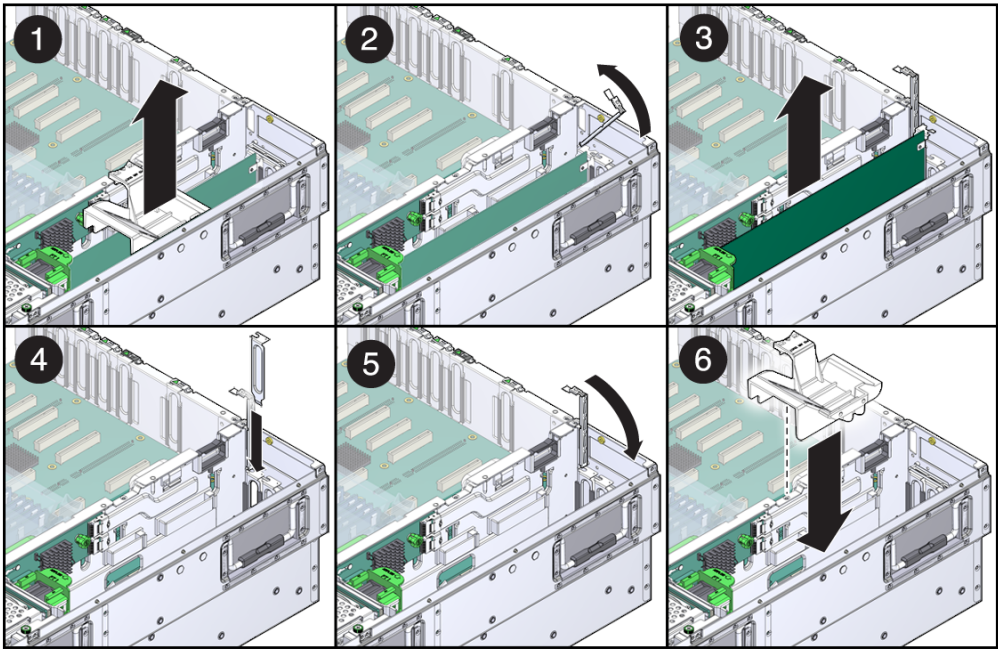

3. **Rotate the securing bracket up.**
4. **Lift the card out of the slot.**

   Set the card on an antistatic mat.
5. **Consider your next step:**
   - If you are replacing the card, continue to "Install PCI-X and PCIe Cards in Slot 0-3" on page 3-27.
   - If you do not replace the card, install a filler panel.
6. **Rotate the securing bracket down.**
7. **See** Chapter 4 **to perform the tasks needed to bring the server back online.**

▼ Install PCI-X and PCIe Cards in Slot 0-3

1. **Prepare the server for PCI card installation.**

   See Chapter 2.

2. **Remove the replacement card from its packaging and place it onto an antistatic mat.**

3. **Remove the PCI air baffle (**FIGURE 3-21**).**

FIGURE 3-21 PCI Slot Securing Bracket

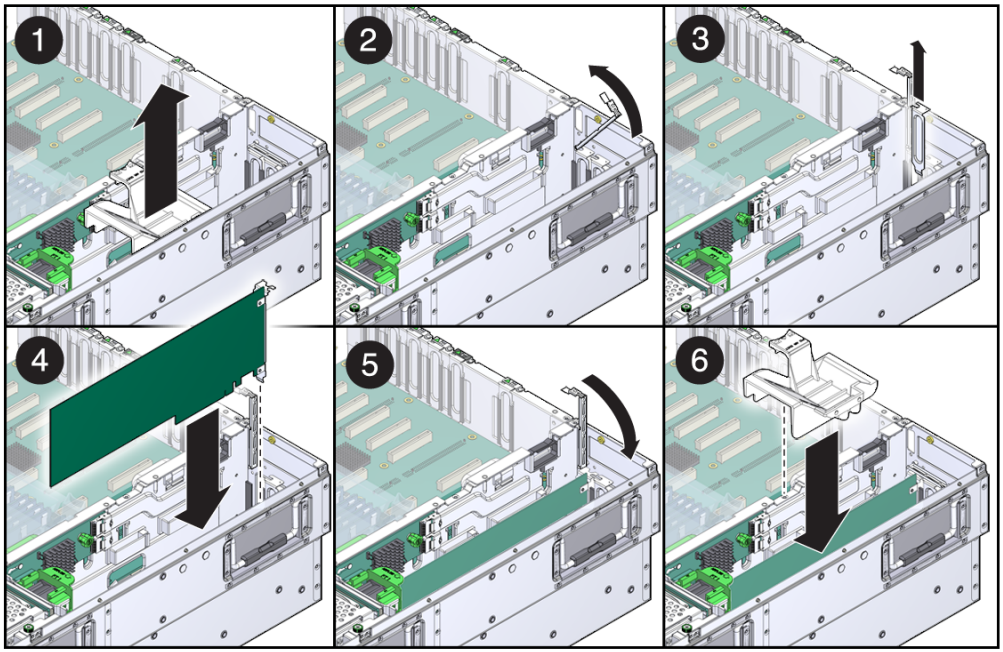

4. **Swing the PCI securing bracket up.**

5. **If a filler panel is installed, remove it by pulling the tab.**

6. **Lower the card into the PCI slot.**

7. **Rotate the PCI securing bracket down.**

8. **Replace the PCI air baffle.**

9. **See** Chapter 4 **to perform the tasks needed to bring the server back online.**

3.9.2 Replacing PCI Cards in the PCI Mezzanine

Note – In a fully loaded system, the maximum power of any one PCI card is 25 watts.

▼ Remove PCI Cards in the PCI Mezzanine

1. **Prepare the server for PCI card removal.**

   See Chapter 2.

2. **With the PCI mezzanine installed and cabled, identify which card is to be removed.**

3. **Loosen the appropriate PCI card retainer (**FIGURE 3-22**).**

FIGURE 3-22 Removing a PCI Card From the PCI Mezzanine

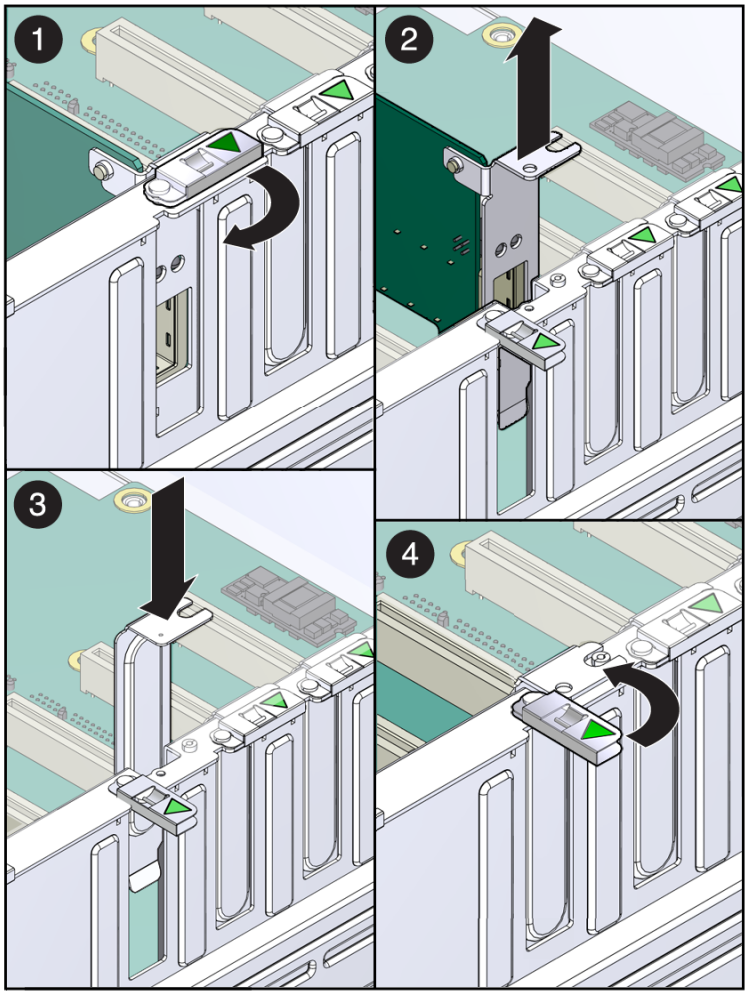

4. **Slide the card to the left and lift it out of the PCI mezzanine.**

   Set the card aside on an antistatic mat.

5. **Consider your next step:**

   - If you are replacing the card, continue to "Install PCI Cards in the PCI Mezzanine" on page 30.
   - If you do not replace the card, install a filler panel.

6. **See** Chapter 4 **to perform the tasks needed to bring the server back online.**

▼ Install PCI Cards in the PCI Mezzanine

1. **Prepare the server for PCI card installation.**

   See Chapter 2.

2. **Remove the replacement card from its packaging and place it onto an antistatic mat.**

3. **If a filler panel is installed, remove it by pulling the tab.**

4. **Lower the card into position on the PCI mezzanine, then slide it to the right to seat it into the connector.**

5. **Tighten the PCI retainer.**

6. **See Chapter 4 to perform the tasks needed to bring the server back online.**

3.10 Replacing the System/Alarm LED Board

To replace the system/alarm LED board, you must remove the following components:

- Air baffle (see "Remove the Air Baffle" on page 2-6)
- Memory mezzanine (see "Remove the Memory Mezzanine" on page 2-6
- System fan 0 (see "Replacing System Fan 0" on page 3-20)

▼ Remove the System/Alarm LED Board

1. **Prepare the server for system/alarm LED board removal.**

   See Chapter 2.

2. **Remove system fan 0 assembly.**

   See "Replacing System Fan 0" on page 3-20.

3. **Loosen the thumbscrew of the LED board, and swing the board out to the left (FIGURE 3-23).**

FIGURE 3-23 Removing the LED Board

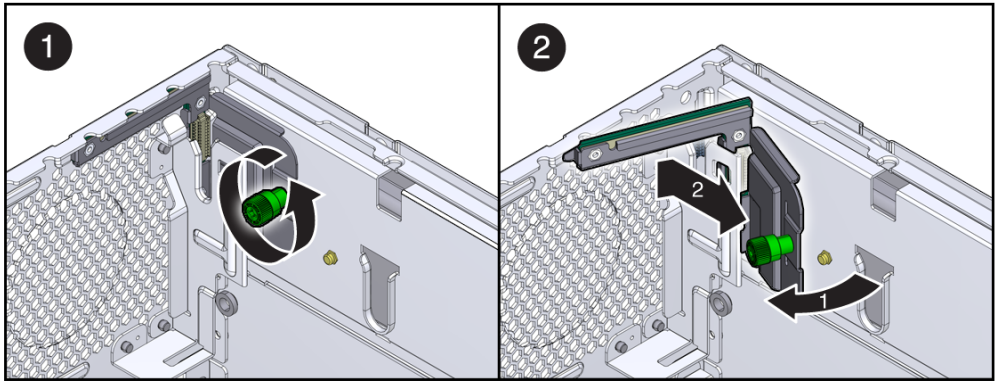

4. **Carefully lift the LED board.**
5. **Set the LED board aside on an antistatic mat.**
6. **Continue to** "Install the System/Alarm LED Board" on page 3-31**.**

▼ Install the System/Alarm LED Board

1. **Remove the replacement LED board from its packaging and place it on an antistatic mat.**
2. **Insert the tab on the LED board into the slot on the chassis.**
3. **Swing the LED board right to the chassis and tighten the thumbscrew.**
4. **Install system fan 0.**

   See "Replacing System Fan 0" on page 3-20.
5. **See** Chapter 4 **to perform the tasks needed to bring the server back online.**

3.11 Replacing the SAS Expander Card

Use the instructions in this section to replace the SAS expander card.

▼ Remove the SAS Expander Card

1. **Prepare the server for removal of the SAS expander card.**

   See Chapter 2.

2. **Remove system fan 1.**

   See Section 3.7 "Replacing System Fan 1" on page 3-22.

3. **Disconnect the two cables attached to the expander card.**

4. **Loosen the green captive screw on the expander card (**FIGURE 3-24**).**

FIGURE 3-24 Removing the SAS Expander Card

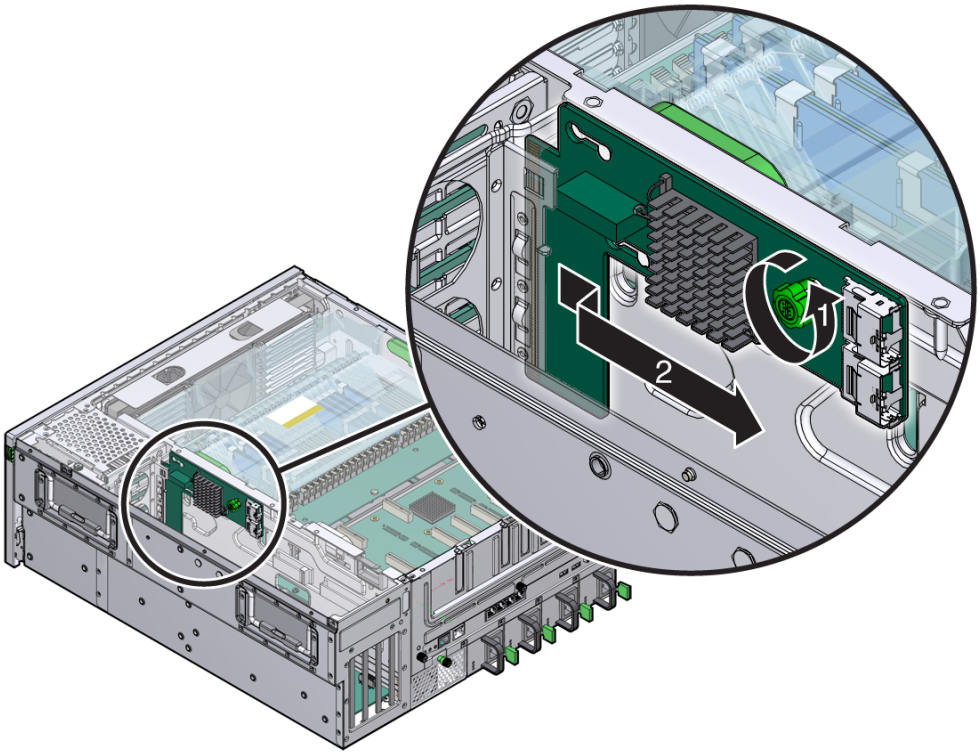

5. **Slide the expander card straight back until the keyhole slots on the front of the card clear the expansion card posts.**
6. **Pull the expander card away from the chassis wall until it is clear of the expander posts.**

▼ Install the SAS Expander Card

1. **Remove the new SAS expander card from its packaging.**
2. **Align the keyhole slots on the expander card with the posts on the chassis wall.**

FIGURE 3-25 Installing the SAS Expander Card

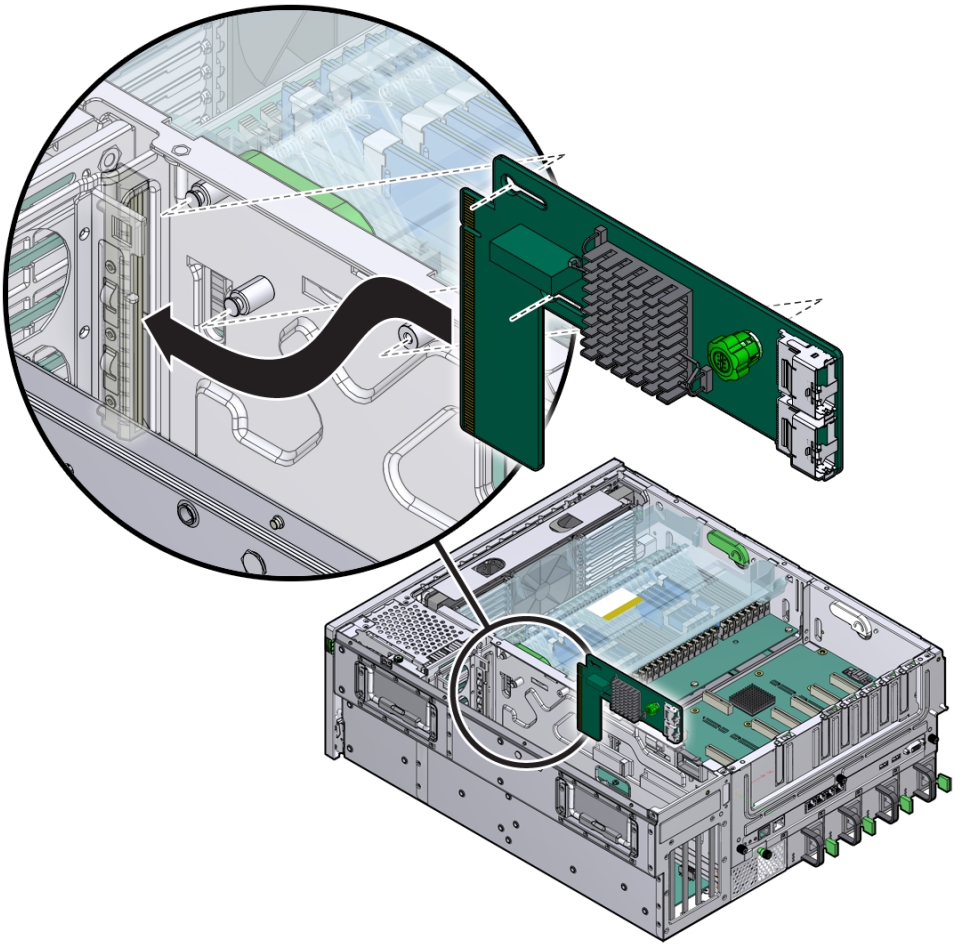

3. **Push the expander card against the chassis wall, then push the card forward until the card is seated into the interconnect slot.**
4. **Tighten the green captive screw, and attach the two expansion cables.**
5. **Attach the two expansion cables.**
6. **See Chapter 4 for instructions on how to return the server to service.**

3.12 Replacing the Battery

Before you replace the battery, you must remove the following components as part of preparing the server for battery removal:

- Air baffle (see "Remove the Air Baffle" on page 2-6)
- PCI mezzanine (see "Remove the PCI Mezzanine" on page 2-7)

▼ Remove the Battery

1. **Prepare the server for battery removal.**

   See Chapter 2.

2. **Pry the battery out of the motherboard (**FIGURE 3-26**).**

FIGURE 3-26 Prying the Battery From the Motherboard

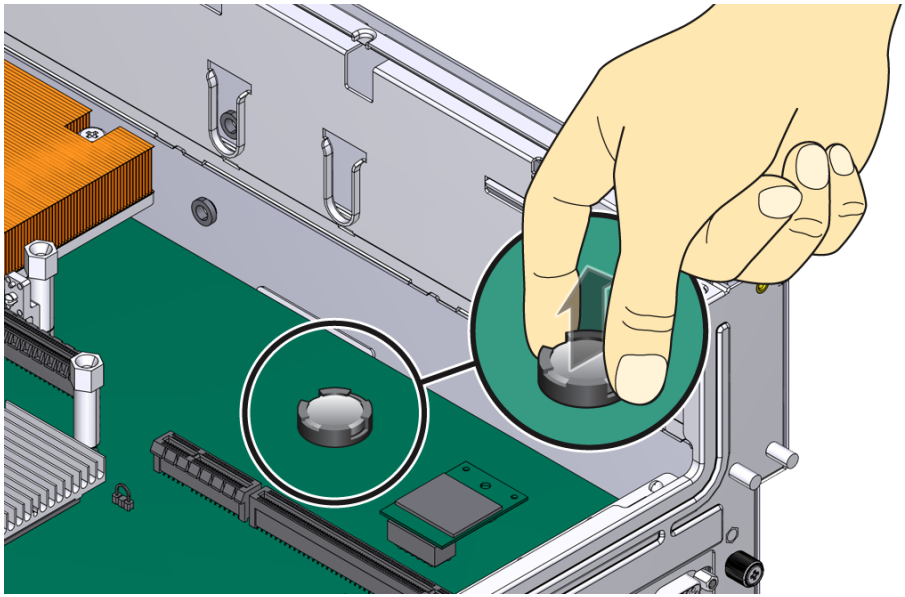

3. **Set the battery aside on an antistatic mat.**

▼ Install the Battery

Note – The battery is a CR-1225 or equivalent.

1. **Remove the replacement battery from its packaging.**
2. **Press the new battery in with the "+" side facing up (**FIGURE 3-27**).**

FIGURE 3-27 Inserting the Battery Into the Service Processor Board

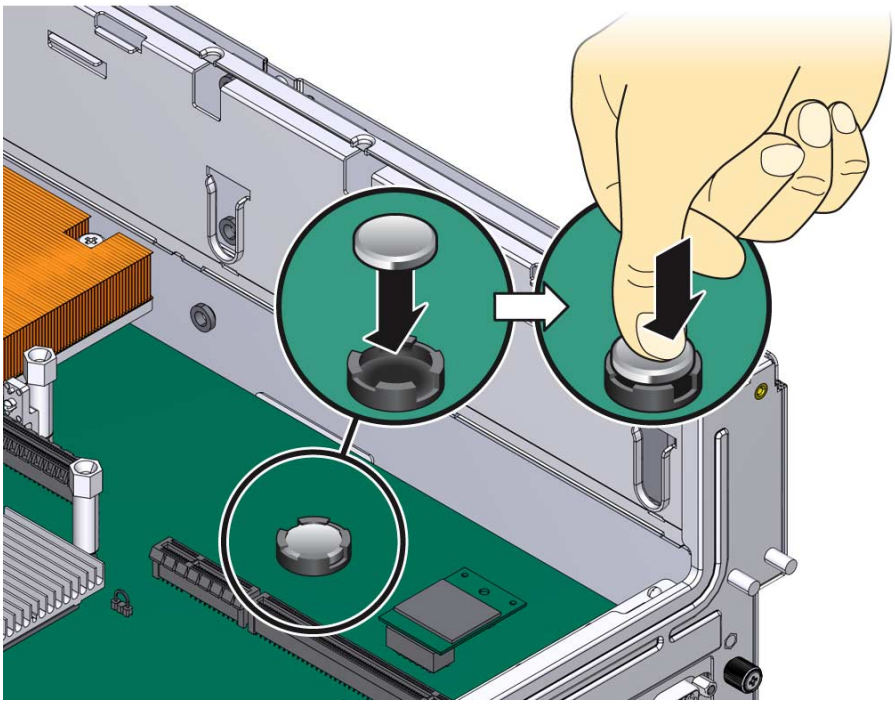

3. **See** Chapter 4 **to perform the tasks needed to bring the server back online.**

3.13 Replacing the Motherboard Assembly

Use the instructions in this section to replace the motherboard assembly.

▼ Remove the Motherboard Assembly

Before you can remove the motherboard, you must remove the following components:

- Air baffle (see "Remove the Air Baffle" on page 2-6)
- Memory mezzanine (see "Remove the Memory Mezzanine" on page 2-6
- PCI mezzanine (see "Remove the PCI Mezzanine" on page 2-7)
- System fan 0 (see "Replacing System Fan 0" on page 3-20)

1. **Prepare the server for motherboard assembly removal.**

   See Chapter 2.

2. **Disconnect the cable connected to the motherboard (**FIGURE 3-28**).**

FIGURE 3-28 Removing the Cable Connected to the Motherboard

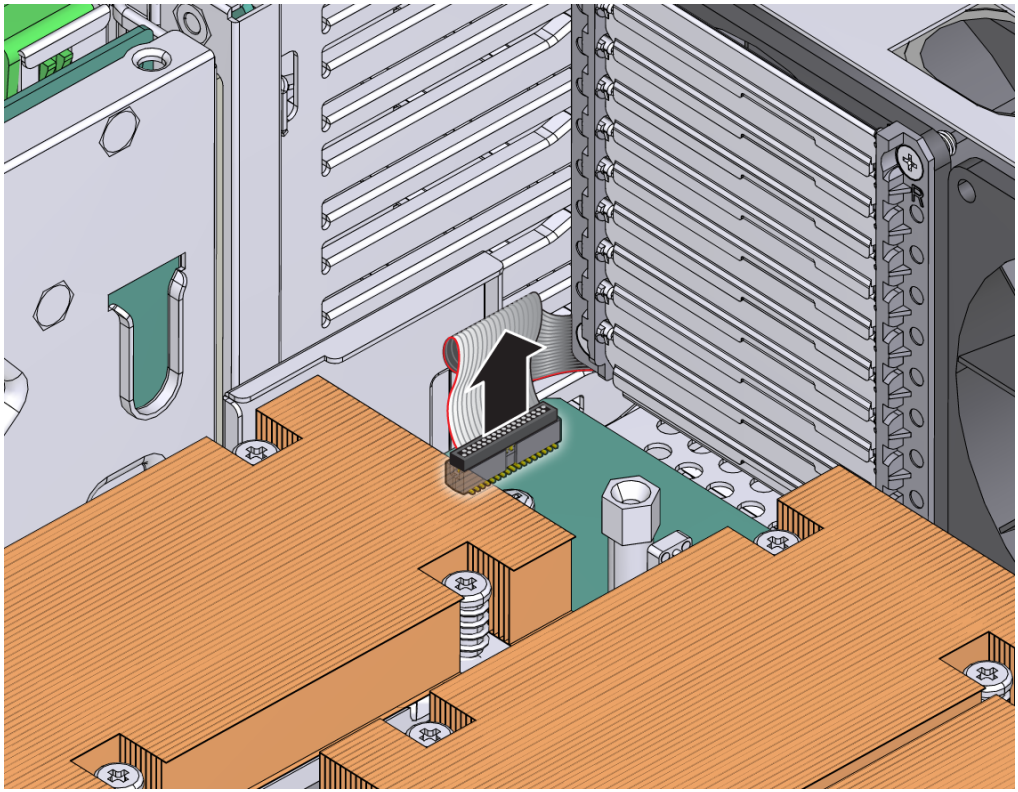

3. **Loosen or remove the screws that secure the motherboard assembly to the chassis (**FIGURE 3-29**).**

FIGURE 3-29 Removing the Motherboard Assembly Screws

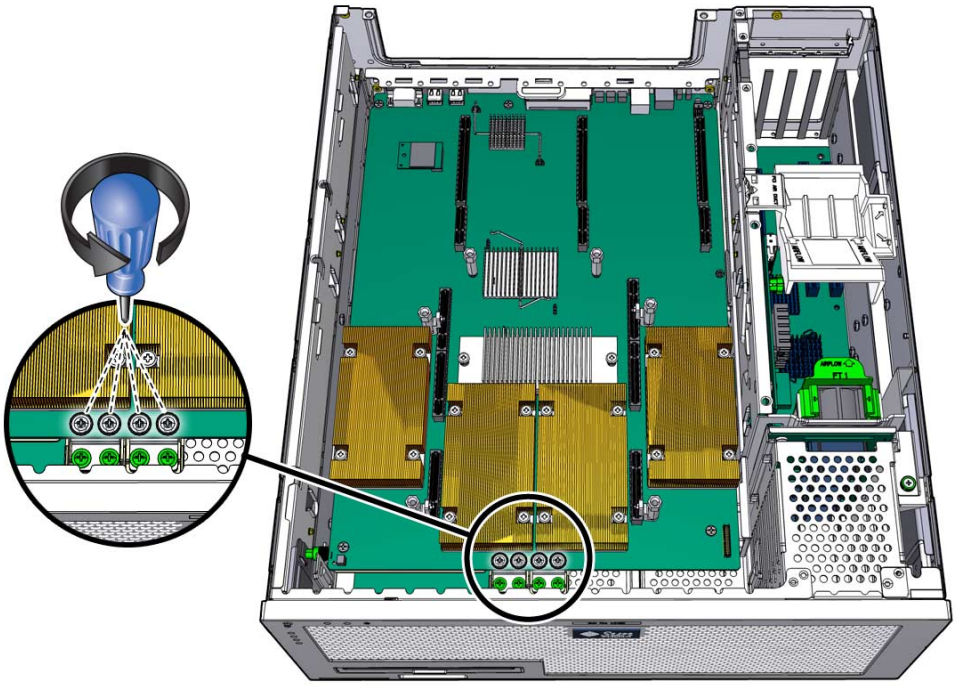

4. **Loosen the two captive screws at the center of the motherboard assembly (FIGURE 3-29).**
5. **Lift slighty and slide the motherboard assembly forward approximately one inch (25.4 mm) (FIGURE 3-30).**
6. **Lift up on the right edge to approximately a 45 degree angle (FIGURE 3-30).**
7. **Remove the motherboard assembly from the chassis (FIGURE 3-30).**

FIGURE 3-30 Removing the Motherboard Assembly From the Chassis

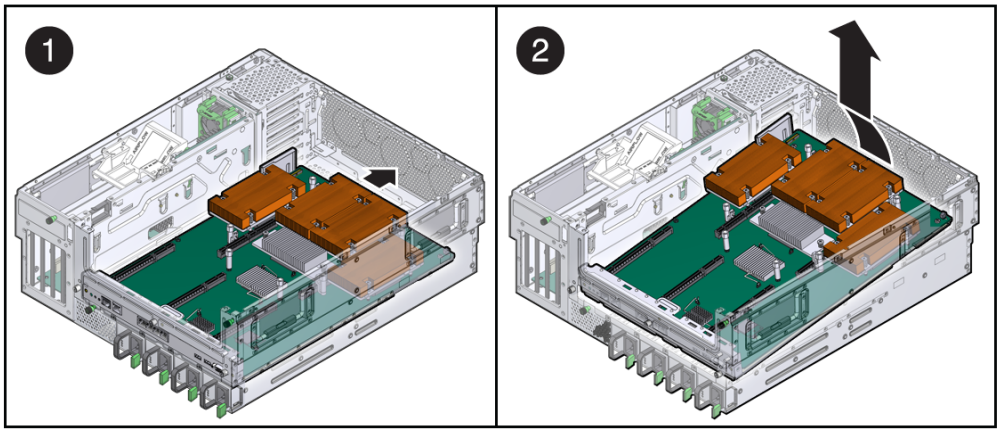

8. **Set the motherboard assembly aside on an antistatic mat.**

▼ Install the Motherboard Assembly

1. **Remove the replacement motherboard assembly from its packaging, and place it on an antistatic mat.**
2. **Lower the left edge of the motherboard assembly into the chassis, then the entire board, and while slightly elevated, slide the motherboard assembly to the back of the chassis (**FIGURE 3-31**).**

FIGURE 3-31 Installing the Motherboard Assembly Into the Chassis

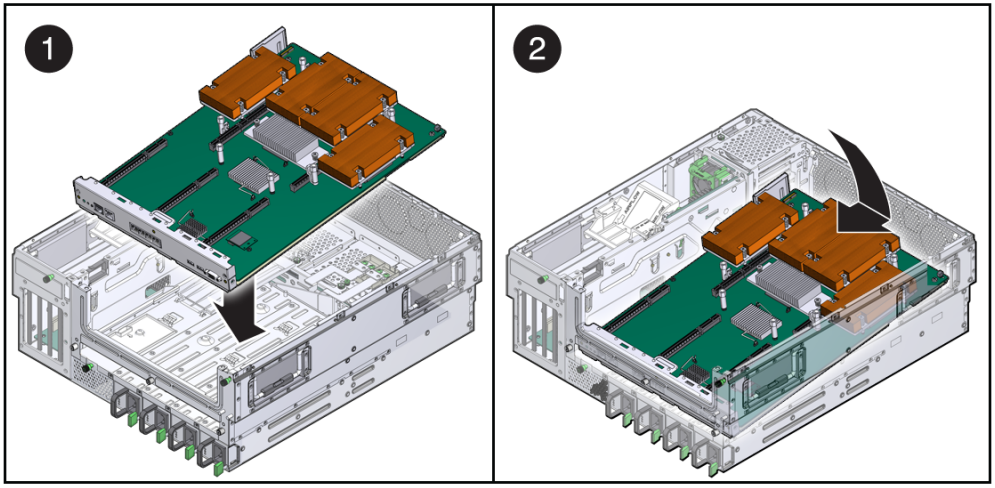

3. **Align the motherboard assembly screw holes over the chassis standoffs.**
4. **Tighten the captive screws at the center of the motherboard assembly (FIGURE 3-32).**

FIGURE 3-32 Installing the Motherboard Assembly Screws

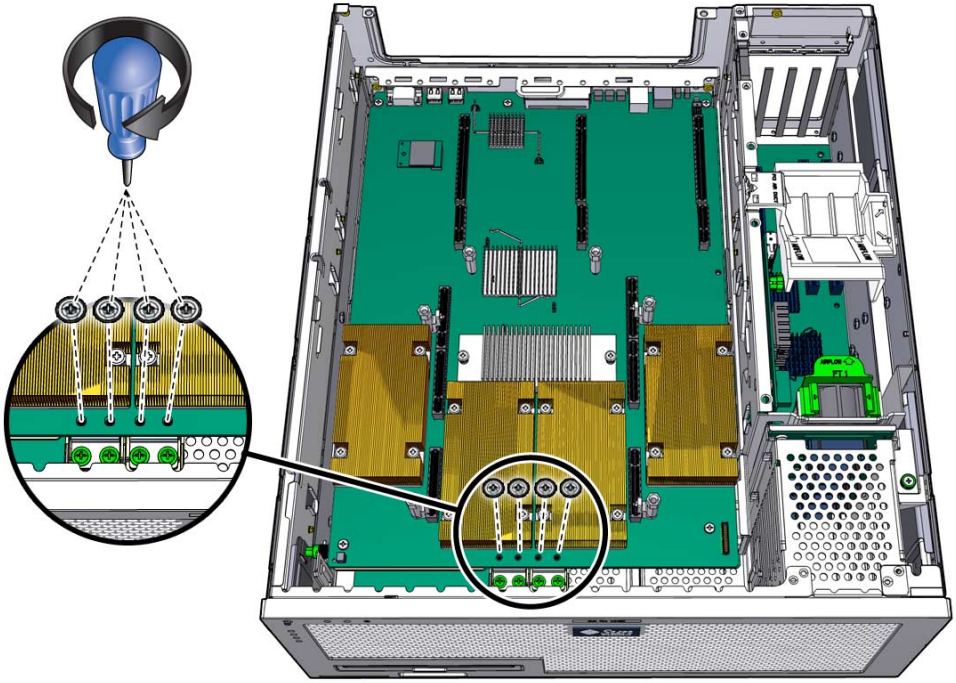

5. **Install the two power screws and four other screws that secure the motherboard assembly to the chassis (**FIGURE 3-32**).**

6. **Reconnect the cable to the connector on the motherboard assembly (**FIGURE 3-33**):**

FIGURE 3-33 Reconnecting the Cable to the Motherboard Assembly

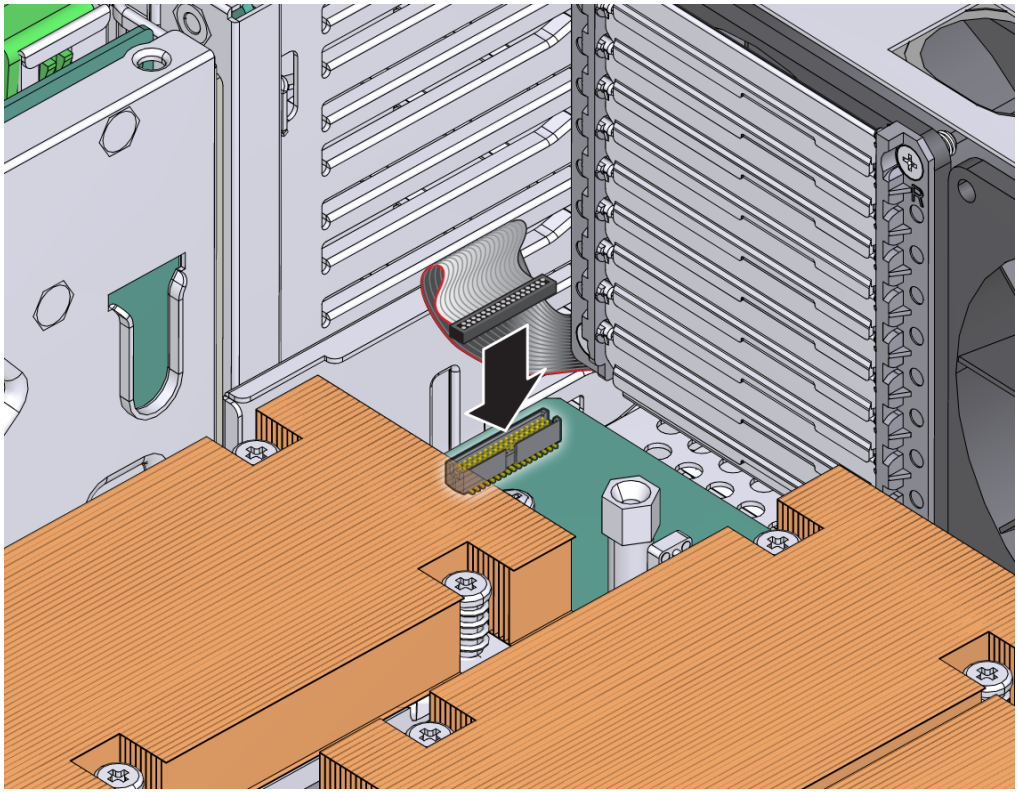

7. **Replace system fan 0** (see "Replacing System Fan 0" on page 3-20).
8. **See** Chapter 4 **to perform the tasks needed to bring the server back online.**

3.14 Replacing the Power Board

To remove the power board, you must remove the following components as part of preparing the server for power board replacement:

- Memory mezzanine (see "Remove the Memory Mezzanine" on page 2-6)
- PCI mezzanine (see "Remove the PCI Mezzanine" on page 2-7)
- System fan 0 (see "Replacing System Fan 0" on page 3-20)

- Optical media drive (see "Replacing the Optical Media Drive" on page 3-11)
- Motherboard (see "Remove the Motherboard Assembly" on page 3-37)

▼ Remove the Power Board

1. **Prepare the server for power board removal.**

   See Chapter 2.

2. **Perform the removal instructions in the following sections:**
   - "Remove System Fan 0" on page 3-20
   - "Remove the Optical Media Drive" on page 3-11
   - "Remove the Motherboard Assembly" on page 3-37

3. **Remove the screws that secure the power board to the chassis (**FIGURE 3-34**).**

FIGURE 3-34 Removing the Power Board Screws

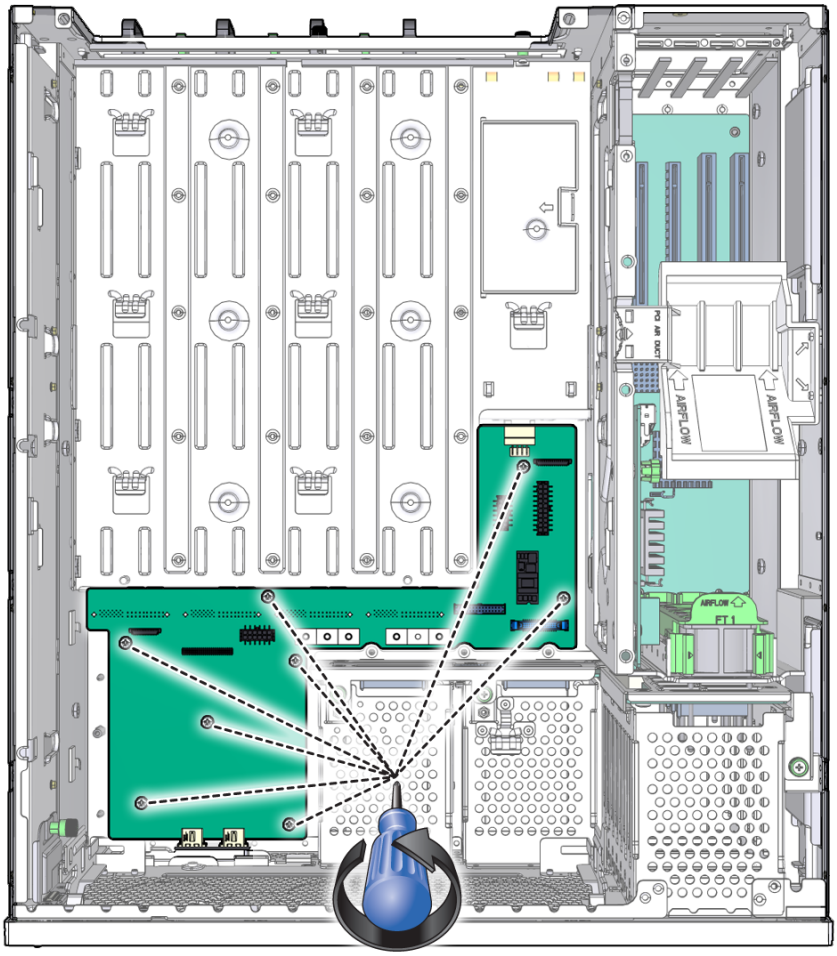

4. **Lift the power board out of the chassis, and set it aside on an antistatic mat.**
5. **Continue to** "Install the Power Board" on page 3-46**.**

▼ Install the Power Board

1. **Remove the replacement power board from its packaging and place it on an antistatic mat.**
2. **Lower the power board into the chassis, aligning the board's holes with the standoffs in the chassis.**
3. **Install the screws firmly to secure the power board to the chassis.**
4. **Perform the installation instructions in the following sections:**
   - "Install the Motherboard Assembly" on page 3-40
   - "Replacing System Fan 0" on page 3-20
   - "Install the Optical Media Drive" on page 3-12
5. **See** Chapter 4 **to perform the tasks needed to bring the server back online.**

CHAPTER 4

Returning the Server to Service

This chapter contains the tasks to perform after replacing components within the server.

4.1 Returning the Server to Service

After replacing components inside of the server, perform the following tasks:

- "Install the PCI Mezzanine" on page 4-1
- "Install the Air Baffle" on page 4-4
- "Install the Top Cover" on page 4-4
- "Reinstall the Server in the Rack" on page 4-5
- "Reconnect the Cables to the Server" on page 4-5
- "Power On the Server" on page 4-6

When replacing some of the components, not all of these tasks are necessary. The replacement procedures for those components address this fact.

▼ Install the PCI Mezzanine

If you removed the PCI mezzanine to service another component, use the instructions in this section to install the PCI mezzanine.

1. **Ensure that all three of the PCI riser cards are fully seated in the motherboard.**
2. **Align the mezzanine with the chassis, and lower it gently into the chassis.**

   Do not force the mezzanine down. Use the securing levers to seat the mezzanine fully into the chassis.

FIGURE 4-1 Installing the PCI Mezzanine

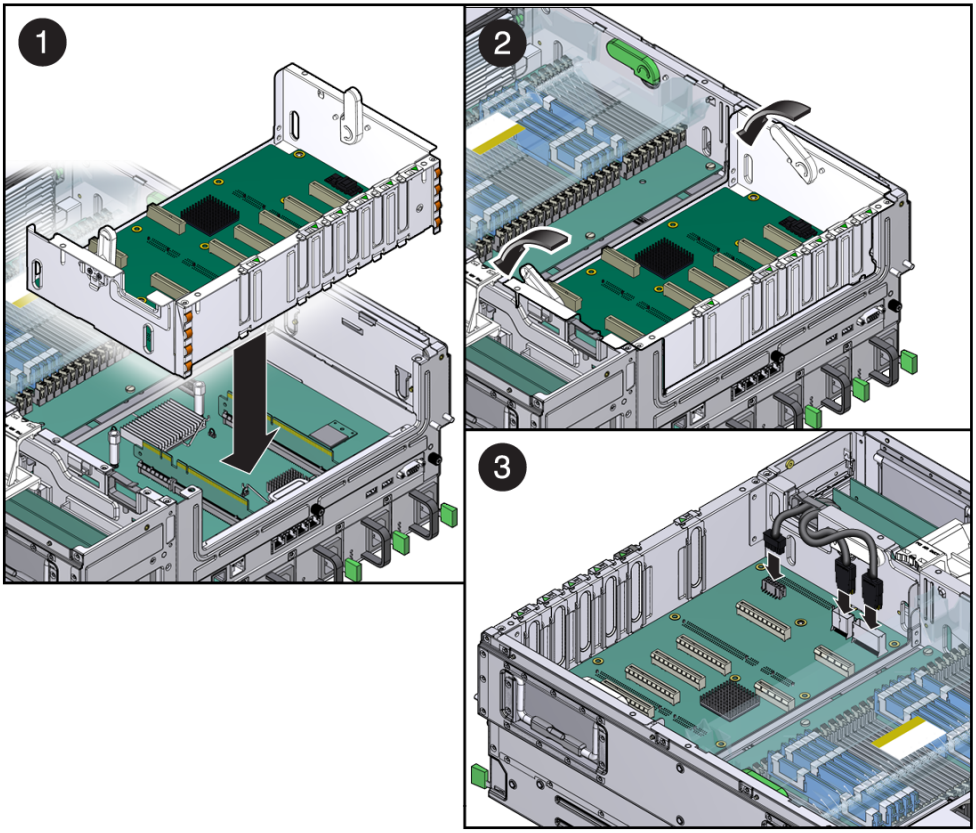

3. **Push the securing levers down to seat the mezzanine into the chassis.**
4. **Connect the three system cables to the mezzanine board.**

▼ Install the Memory Mezzanine

If you removed the memory mezzanine to service another component, use the instructions in this section to install the memory mezzanine.

1. **Ensure that both of the memory mezzanine riser cards are fully seated in the motherboard.**

2. **Align the mezzanine with the chassis, and gently lower it into the chassis.**

   Do not force the mezzanine into the chassis. Use the securing levers to seat the mezzanine fully into the chassis.

FIGURE 4-2 Installing the Memory Mezzanine

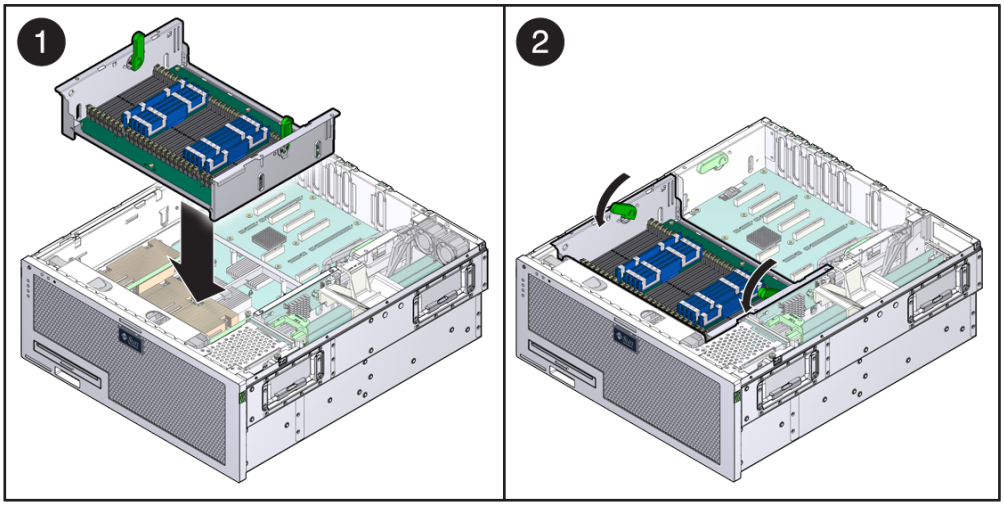

3. **Push the securing levers down to seat the memory mezzanine into the chassis.**

▼ Install the Air Baffle

If you removed the air baffle to service other components, use the instructions in this section to install the air baffle.

1. **Align the baffle hinges with the holes in the chassis.**

FIGURE 4-3 Installing the Air Baffle

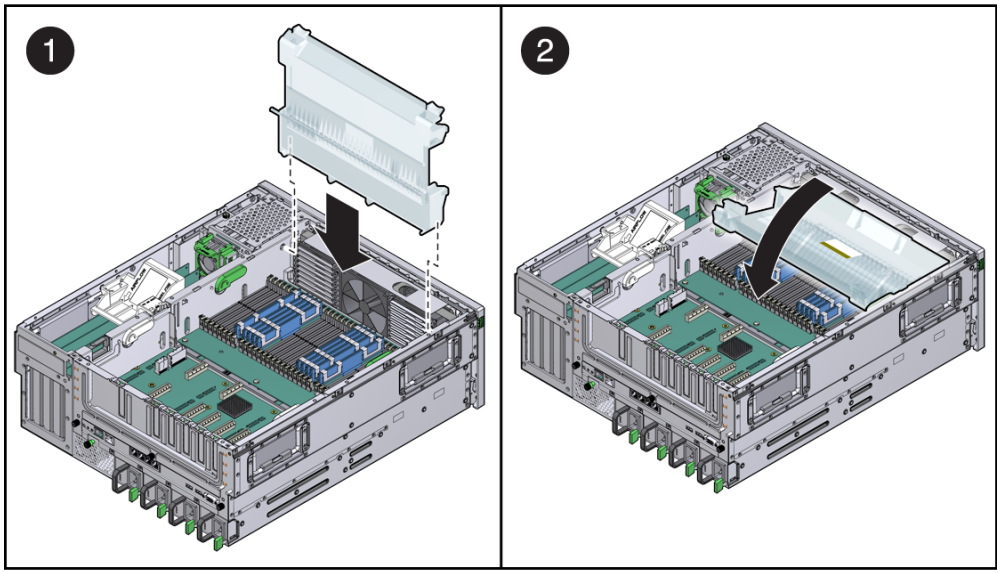

2. **Insert one hinge to one of the holes, and gently squeeze the other side of the air baffle until you can insert the other hinge.**

▼ Install the Top Cover

1. **Place the top cover on the chassis.**

   Set the cover down so that it hangs over the rear of the server by about an inch (25 mm).

2. **Slide the cover forward until it latches into place (**FIGURE 4-4**).**

FIGURE 4-4 Installing Top Cover

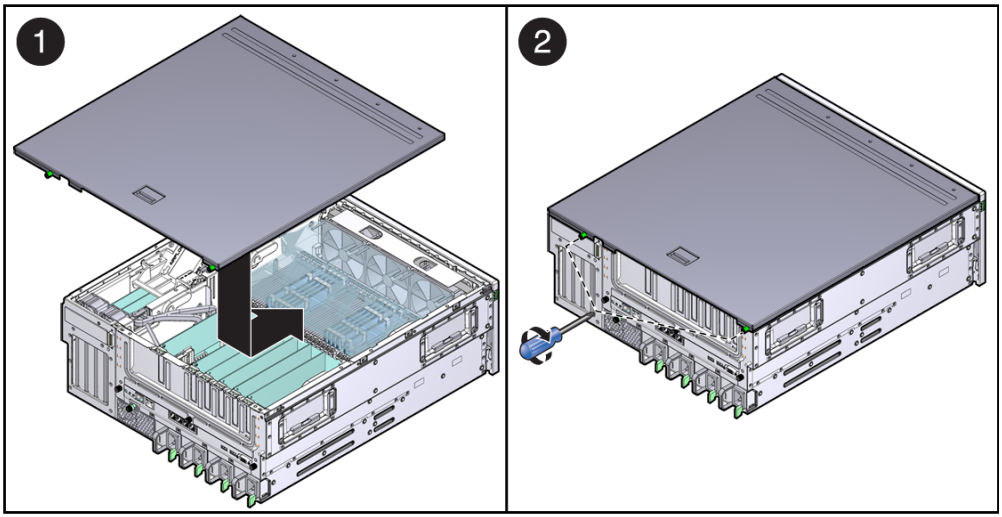

3. **Tighten the captive screws on the rear of the cover.**

▼ Reinstall the Server in the Rack

The steps you must complete to return the server to the rack depend on the type of rack and the mounting kit.

- **Refer to the *Sun Netra X4450 Server Installation Guide* for instructions on how to install the server into the rack.**

  You can use the instructions in the *Sun Netra X4450 Server Installation Guide* to finish the installation process, or you can return to this section to finish the process.

▼ Reconnect the Cables to the Server

1. **Reconnect the Ethernet and PCI cables as appropriate.**
2. **If necessary, reinstall the appropriate cables into the CMA.**
3. **Reconnect the power cables.**

▼ Power On the Server

As soon as the power cords are connected, standby power is applied. Depending on the configuration of the firmware, the system might boot. If not, follow this procedure.

- **If the server does not boot, do one of the following:**
  - Use the tip of a pen to press the power button on the bezel.
  - Type the `poweron` command to the system console.

    For example:

```
sc> poweron
```

APPENDIX **A**

Configuring BIOS and POST

This chapter describes how to view or modify the BIOS Setup Utility screens in the Sun Netra X4450. The BIOS Setup utility reports system information and can be used to configure the server BIOS settings.

The Basic Input/Output System (BIOS) has a Setup utility stored in the BIOS flash memory. The configured data is provided with context-sensitive help and is stored in the system's battery-backed CMOS RAM. If the configuration stored in the CMOS RAM is invalid, the BIOS settings default to the original state specified at the factory.

The following topics are included:

A.1 Using BIOS Menu Items

You can access BIOS configuration screens from the following interfaces:

- Use a USB keyboard, mouse, and VGA monitor connected directly to the server.
- Use a terminal (or terminal emulator connected to a computer) through the serial port on the back panel of the server.

Access BIOS Configuration Screens and Change the System's Parameters

1. **Enter the BIOS Setup utility by pressing the F2 key while the system is performing the power-on self-test (POST).**

   When BIOS is started, the main BIOS Setup menu screen is displayed.

2. **Highlight the field to be modified using the arrow and Tab keys.**

   Use the left and right arrow keys to move sequentially back and forth through the menu screens. Fields that can be reconfigured are displayed in color. All other fields are nonconfigurable.

   - Use the Up and Down keys on the keyboard, to scroll through a menu.
   - Use the Tab key to move back and forth across columns.

3. **Press Enter to select the field.**

   A dialog box shows the available options.

4. **Modify the Setup field and close the screen.**

5. **If you need to modify other setup parameters, use the arrow and Tab keys to navigate to the desired screen and menu item, and then repeat** Step 1 **through** Step 4**.**

   Otherwise, go to Step 6.

6. **Press and release the right arrow key until the Exit menu screen appears.**

7. **Follow the instructions on the Exit menu screen to save your changes and exit the Setup utility.**

A.2 BIOS Considerations

This section contains information and considerations regarding the system BIOS.

A.2.1 Peripheral Component Interconnect (PCI) Card Slot Booting Priority

For the locations of the Sun Netra X4450 server PCI slots, see Section 3.9 "Replacing PCI Cards" on page 3-25.

The slots for the PCI cards are detected by the BIOS during startup in the following order:

1. PCI-X slot 0
2. PCI-X slot 1
3. PCIe slot 2
4. PCIe slot 3
5. PCIe slot 4
6. PCIe slot 5
7. PCIe slot 6
8. PCIe slot 7
9. PCIe slot 8
10. PCIe slot 9

A.2.2 Ethernet Port (NIC) Device and Driver Naming

The Sun Netra X4450 server has four 10/100/1000BASE-T Gigabit Ethernet ports (NICs). The chassis labeling of the physical ports is shown in FIGURE A-1.

FIGURE A-1 Ethernet Ports

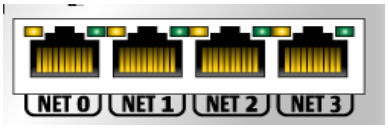

Note – The device naming for the NICs is reported differently by different interfaces and operating systems.

A.2.3 NIC Naming

TABLE A-1 illustrates the default naming used by the various operating systems for the four NICs shown in FIGURE A-1.

TABLE A-1 Sun Netra X4450 NIC Naming

	Net 0	Net 1	Net 2	Net3
`BIOS`	slot 108	slot 108	slot 108	slot 108
`Solaris 10`	nge0	nge1	e1000g0	e1000g1
`Red Hat Linux`	eth2	eth3	eth0	eth1
`SUSE Linux`	eth0	eth1	eth2	eth3
`Windows 2003`	net	net2	net3	net4

A.2.3.1 Sun Netra X4450 Server NIC Booting Priority

The order in which the BIOS detects the Ethernet ports during bootup, and the corresponding drivers that control those ports are listed below:

1. NET 0 (Nvidia NGE 0)
2. NET 1 (Nvidia NGE 1)
3. NET 2 (Intel E1000 G0)
4. NET 3 (Intel E1000 G1)

A.3 BIOS Setup Screens

TABLE A-2 contains summary descriptions of the top-level BIOS setup screens.

TABLE A-2 BIOS Setup Screens Summary

Screen	Description	Section
Main	General product information, including BIOS type, processor, memory, and time and date.	Section A.3.1.1 "BIOS Main Menu Screens" on page A-13
Advanced	Configuration information for the CPU, memory, IDE, Super IO, trusted computing, USB, PCI, MPS, and other information.	Section A.3.1.2 "BIOS Advanced Menu Screens" on page A-14
Boot	Configure the boot device priority (hard drives and the optical media drive).	Section A.3.1.3 "BIOS Boot Menu Screens" on page A-20
Server	Server devices can be configured by the BIOS (if applicable).	Section A.3.1.4 "BIOS Server Menu Screens" on page A-23
Security	Set or change the user and supervisor passwords.	Section A.3.1.5 "BIOS Security Menu Screens" on page A-27
Exit	Save changes and exit, discard changes and exit, discard changes, or load optimal or fail-safe defaults.	Section A.3.1.6 "BIOS Exit Menu Screens" on page A-27

FIGURE A-2 summarizes the BIOS menu tree. See Section A.3.1 "BIOS Setup Menu Screens" on page A-12 for examples of each of these screens.

FIGURE A-2 BIOS Utility Menu Tree

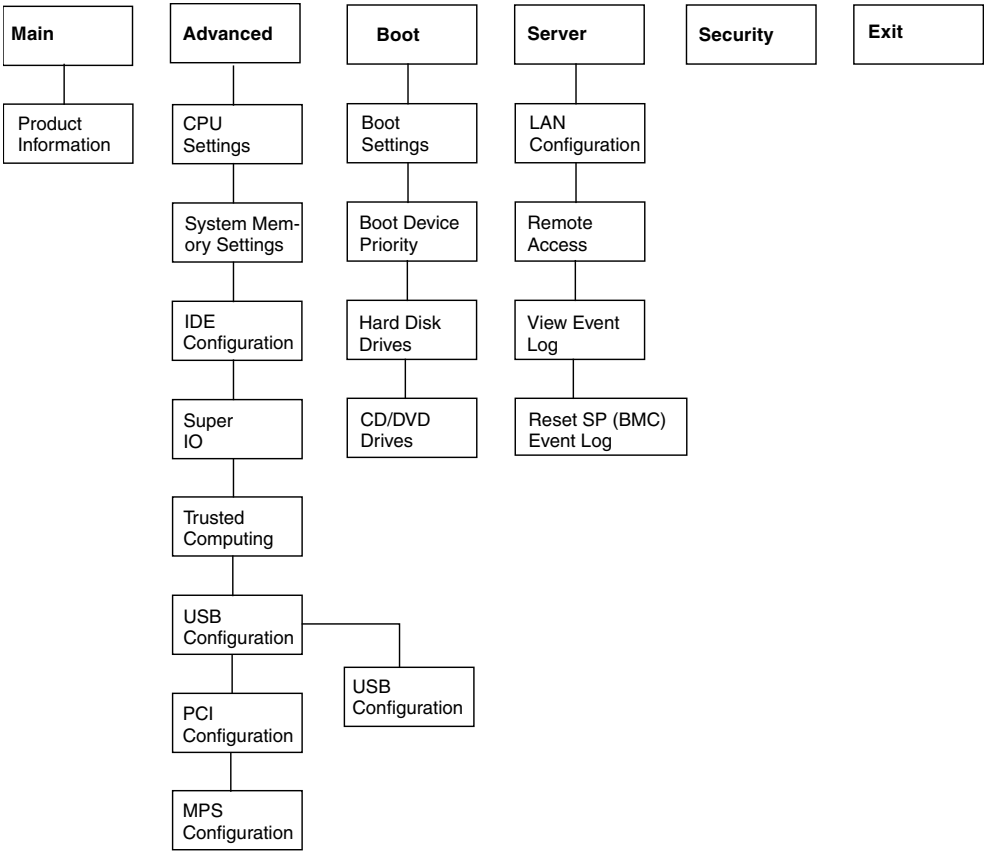

A.3.1 BIOS Setup Menu Screens

The following figures show sample Sun Netra X4450 BIOS Setup Utility screens.

Note – The screens shown are examples. The version numbers and the screen items and selections shown are subject to change over the life of the product.

All settings are set to the optimal default at startup.

A.3.1.1 BIOS Main Menu Screens

The BIOS Main screens provide general product information, including BIOS type, processor type, memory, and time and date. The Sun Netra X4450 has the following BIOS Main screens.

FIGURE A-3 BIOS Setup Utility: Main - System Overview

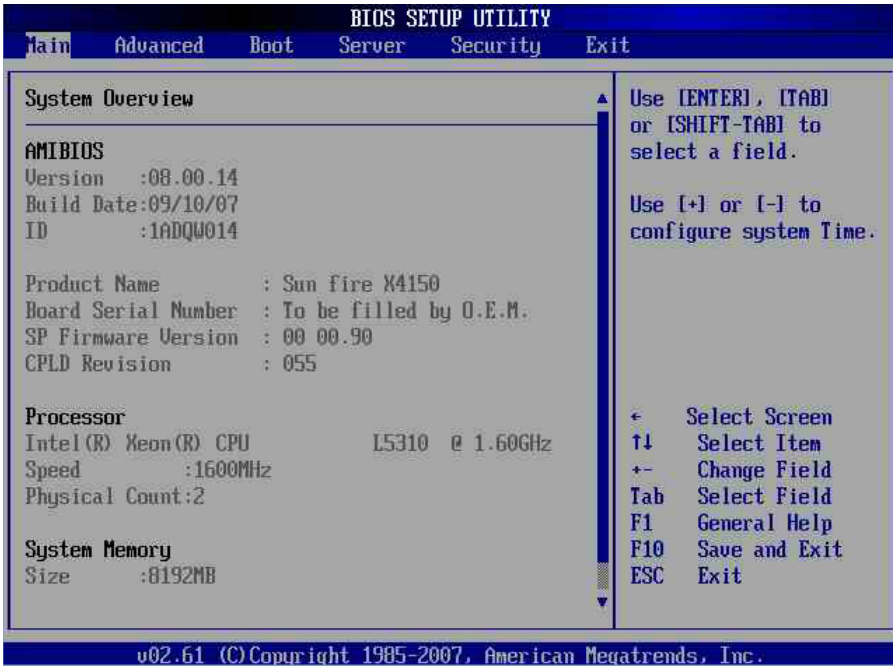

FIGURE A-4 BIOS Setup Utility: Main - Product Information

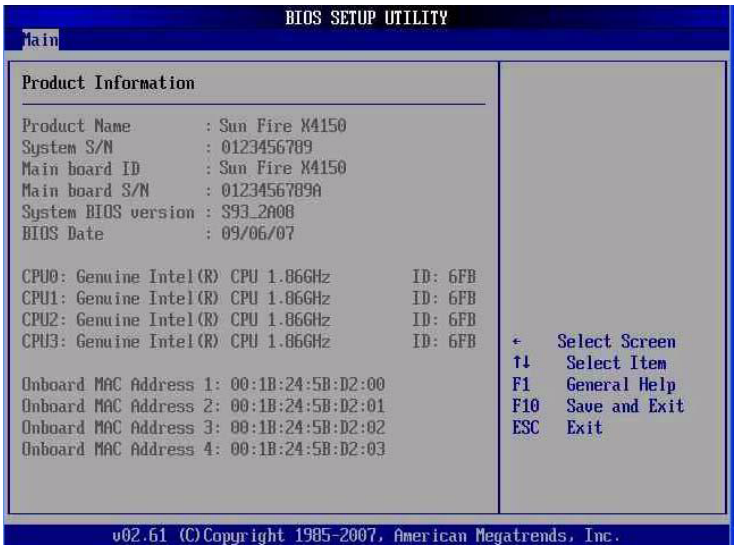

A.3.1.2 BIOS Advanced Menu Screens

The BIOS Advanced screens provide detailed configuration information for the CPU, memory, IDE, Super IO, trusted computing, USB, PCI, MPS, and other system information.

The Sun Netra X4450 has the following BIOS Advanced screens:

FIGURE A-5 BIOS Setup Utility: Advanced

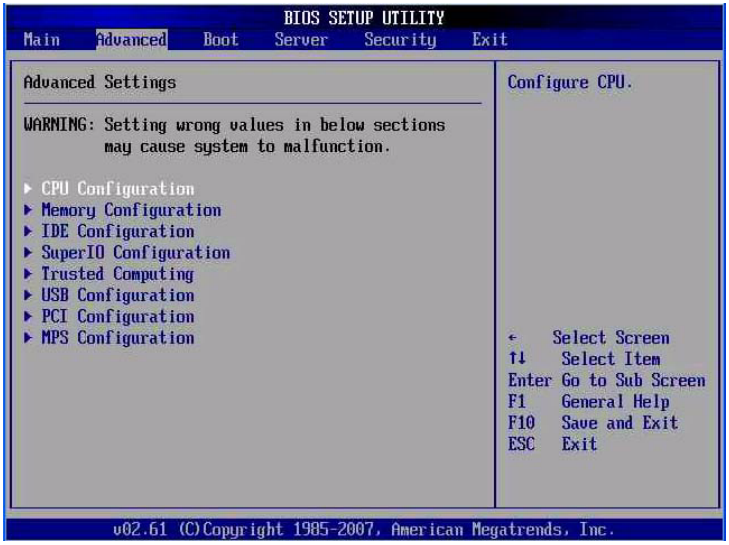

FIGURE A-6 BIOS Setup Utility: Advanced - CPU Settings

```
                    BIOS SETUP UTILITY
        Advanced

Configure advanced CPU settings                  This should be enabled
                                                 in order to enable or
Genuine Intel(R) CPU 1.86GHz                     disable the Hardware
CPUID        :6FB                                Prefetcher Disable
Stepping     :G-0                                Feature.
Frequency    :1.86GHz
FSB Speed    :1066MHz
Cache L1     :128 KB
Cache L2     :8192 KB
Ratio Status:Unlocked (Min:06, Max:07)
Ratio Actual Value:7

Hardware Prefetcher            [Enabled]         ←    Select Screen
Adjacent Cache Line Prefetch   [Enabled]         ↑↓    Select Item
Intel(R) Virtualization Tech   [Enabled]         +-    Change Option
Execute-Disable Bit Capability [Enabled]         F1    General Help
Core Multi-Processing          [Enabled]         F10   Save and Exit
                                                 ESC   Exit

        v02.61 (C)Copyright 1985-2007, American Megatrends, Inc.
```

FIGURE A-7 BIOS Setup Utility: Advanced - System Memory Settings

```
                    BIOS SETUP UTILITY
        Advanced

System Memory Settings                           Interleaving:
                                                  interleaves branch
MCH Branch Mode                [Branch Interleave]  across branches.
Branch 0                       [Enabled]         Mirroring:
Branch 1                       [Enabled]          mirrors branch space
Branch Sparing                 [Disabled]         between branches.
FBD Throttling Mode            [Enabled]         Single Channel:
                                                  forces single ch-0.
SF Bypass                      [Disabled]
Read Completion Coalescing     [Auto]
Non Compliance Mode            [No Compliance]
Spread Spectrum                [Disable]
                                                 ←    Select Screen
                                                 ↑↓    Select Item
                                                 +-    Change Option
                                                 F1    General Help
                                                 F10   Save and Exit
                                                 ESC   Exit

        v02.61 (C)Copyright 1985-2007, American Megatrends, Inc.
```

FIGURE A-8 BIOS Setup Utility: Advanced - IDE Configuration

```
                    BIOS SETUP UTILITY
        Advanced

IDE Configuration                                  Options

WARNING: Any change in below sections will take    Disabled
         effect on next boot.                      Enabled

ATA/IDE Configuration            [Enabled]
  Configure SATA as              [AHCI]

▶ SATA Port0 [Not Detected]
▶ SATA Port1 [Not Detected]
▶ SATA Port2 [Not Detected]
▶ SATA Port3 [Not Detected]
▶ SATA Port4 [Not Detected]
▶ SATA Port5 [Not Detected]                        ←    Select Screen
                                                   ↑↓   Select Item
                                                   +-   Change Option
                                                   F1   General Help
                                                   F10  Save and Exit
                                                   ESC  Exit

        v02.61 (C)Copyright 1985-2007, American Megatrends, Inc.
```

FIGURE A-9 BIOS Setup Utility: Advanced - Super IO Configuration

```
                    BIOS SETUP UTILITY
        Advanced

Configure Nat8374K Super IO Chipset                Allows BIOS to Select
                                                   Serial Port1 Base
Serial Port1 Address             [3F8/IRQ4]        Addresses.
Serial Port2 Address             [2F8/IRQ3]

                                                   ←    Select Screen
                                                   ↑↓   Select Item
                                                   +-   Change Option
                                                   F1   General Help
                                                   F10  Save and Exit
                                                   ESC  Exit

        v02.61 (C)Copyright 1985-2007, American Megatrends, Inc.
```

FIGURE A-10 BIOS Setup Utility: Advanced - Trusted Computing

```
                    BIOS SETUP UTILITY
          Advanced

Trusted Computing                          Enable/Disable TPM
                                           TCG (TPM 1.1/1.2) supp
TCG/TPM SUPPORT                [Yes]       in BIOS

Execute TPM Command            [Don't change]
  TPM Enable/Disable Status    [Disabled]
  TPM Owner Status             [UnOwned]

                                           ←    Select Screen
                                           ↑↓    Select Item
                                           +-    Change Option
                                           F1    General Help
                                           F10   Save and Exit
                                           ESC   Exit

        v02.61 (C)Copyright 1985-2007, American Megatrends, Inc.
```

FIGURE A-11 Bios Setup Utility: Advanced - USB Configuration

```
                    BIOS SETUP UTILITY
          Advanced

USB Configuration                          Enables support for
                                           legacy USB. AUTO
Module Version - 2.24.2-13.4               option disables
                                           legacy support if
USB Devices Enabled :                      no USB devices are
  2 Keyboards, 2 Mice, 1 Hub, 1 Drive      connected.

Legacy USB Support             [Enabled]
USB 2.0 Controller             [Enabled]

▶ USB Mass Storage Device Configuration

                                           ←    Select Screen
                                           ↑↓    Select Item
                                           +-    Change Option
                                           F1    General Help
                                           F10   Save and Exit
                                           ESC   Exit

        v02.61 (C)Copyright 1985-2007, American Megatrends, Inc.
```

FIGURE A-12 BIOS Setup Utility: Advanced - USB Configuration 2

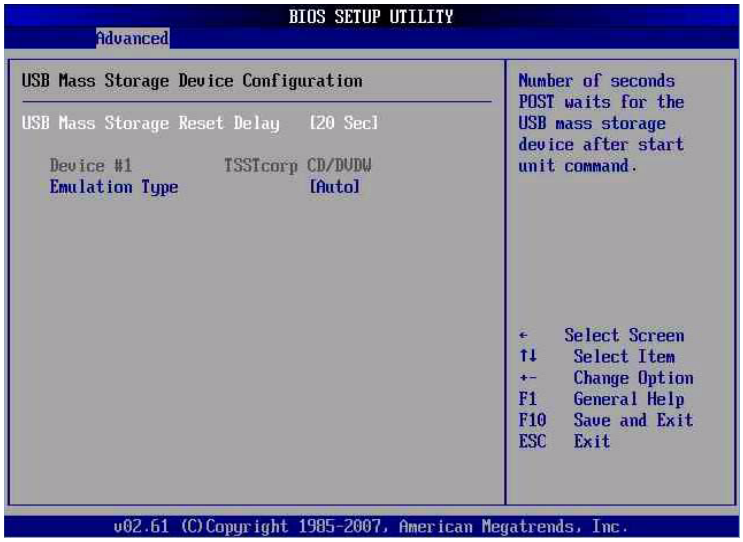

FIGURE A-13 BIOS Setup Utility: Advanced- PCI Configuration

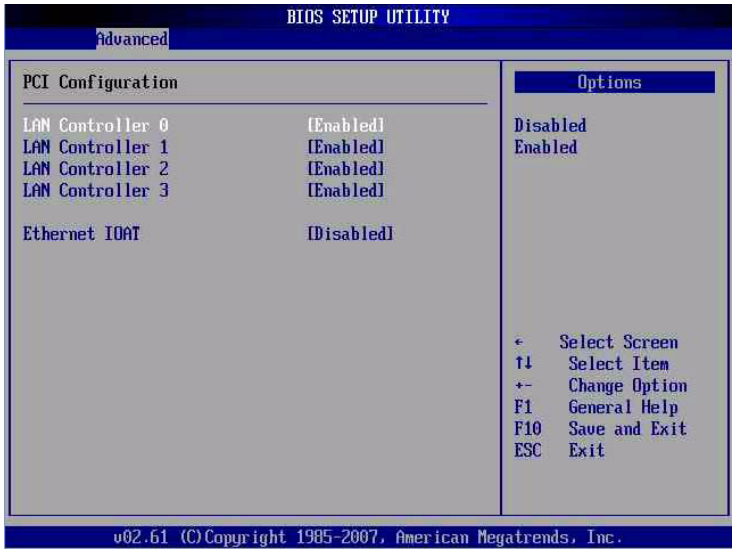

FIGURE A-14 BIOS Setup Utility: Advanced- MPS Configuration

A.3.1.3 BIOS Boot Menu Screens

The BIOS Boot screens enable you to configure the boot device priority (hard drives and the optical media drives). The Sun Netra X4450 has the following BIOS Boot screens.

FIGURE A-15 BIOS Setup Utility: Boot

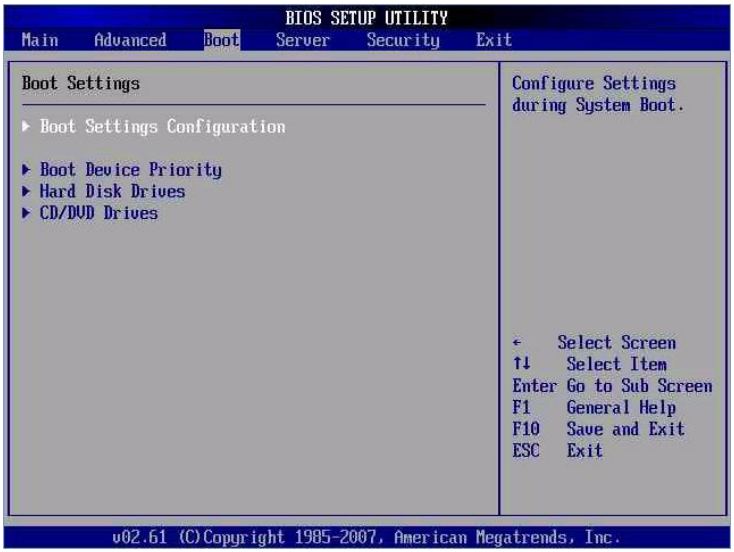

FIGURE A-16 BIOS Setup Utility: Boot Settings Configuration

```
BIOS SETUP UTILITY
Boot

Boot Settings Configuration                 Allows BIOS to skip
                                            certain tests while
Quick Boot                  [Enabled]       booting. This will
Quiet Boot                  [Enabled]       decrease the time
AddOn ROM Display Mode      [Force BIOS]    needed to boot the
Bootup Num-Lock             [On]            system.
Wait For 'F1' If Error      [Enabled]
Hit 'F2' Message Display    [Enabled]
Interrupt 19 Capture        [Enabled]

                                            ←    Select Screen
                                            ↑↓    Select Item
                                            +-    Change Option
                                            F1    General Help
                                            F10   Save and Exit
                                            ESC   Exit

v02.61 (C)Copyright 1985-2007, American Megatrends, Inc.
```

FIGURE A-17 BIOS Setup Utility: Boot Device Priority

```
BIOS SETUP UTILITY
Boot

Boot Device Priority                        Specifies the boot
                                            sequence from the
1st Boot Device             [USB:TSSTcorp CD/DV]  available devices.
2nd Boot Device             [RAID:ASR-5805 PCI-]
3rd Boot Device             [Network:IBA GE Slo]  A device enclosed in
4th Boot Device             [Network:IBA GE Slo]  parenthesis has been
5th Boot Device             [Network:IBA GE Slo]  disabled in the
6th Boot Device             [Network:IBA GE Slo]  corresponding type
                                            menu.

                                            ←    Select Screen
                                            ↑↓    Select Item
                                            +-    Change Option
                                            F1    General Help
                                            F10   Save and Exit
                                            ESC   Exit

v02.61 (C)Copyright 1985-2007, American Megatrends, Inc.
```

FIGURE A-18 BIOS Setup Utility: Boot Hard Drives

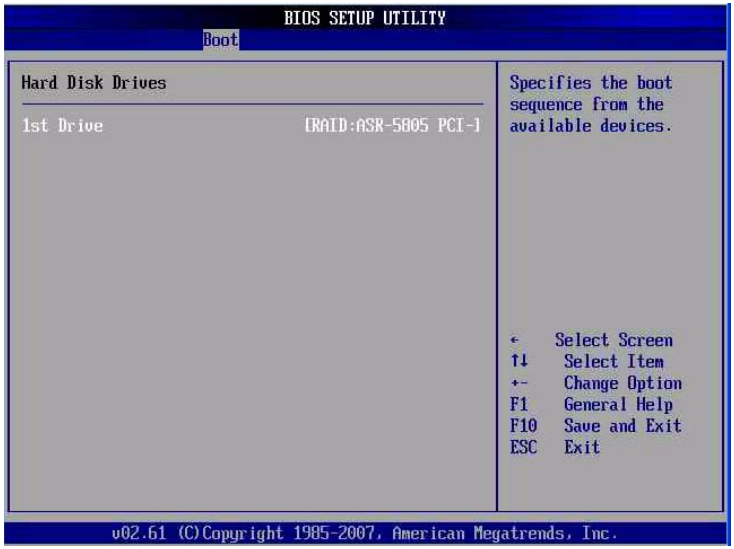

FIGURE A-19 BIOS Setup Utility: Boot CD/DVD Drives

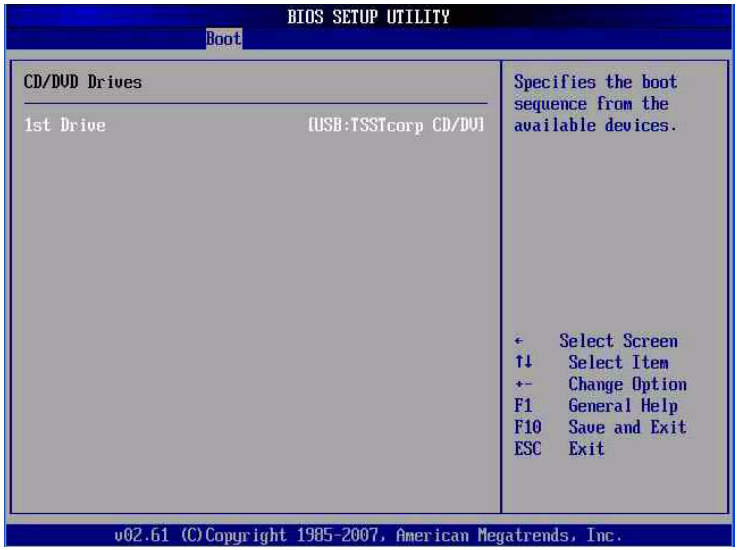

A.3.1.4 BIOS Server Menu Screens

The BIOS Server screens enable you to configure Server devices (if applicable).

Note – The term *BMC* that may be displayed on some screens refers to the SP (service processor).

The Sun Netra X4450 has the following BIOS Server screens.

FIGURE A-20 BIOS Setup Utility: Server

```
                    BIOS SETUP UTILITY
Main    Advanced    Boot    Server    Security    Exit

IPMI Information                          InPut for Set LAN
                                          Configuration command.
Status Of BMC                Working      See IPMI 1.5 Spec,
IPMI Specification Version   2.0          table 19.1
BMC Firmware Version         00 00.91     NOTE:-
CPLD Revision                0.41               Each question in
                                          this group may take
▶ Set AST2000 LAN Configuration           considerable amount of
▶ Remote Access Configuration             time.

Restore on AC Power Loss     [Last State]

Event Control Interface                   ←    Select Screen
                                          ↑↓   Select Item
View Event Log                            Enter Go to Sub Screen
Clear BMC System Event Log                F1   General Help
                                          F10  Save and Exit
Event Logging                [Enabled]    ESC  Exit
ECC Event Logging            [Enabled]
PCI Error Logging            [Enabled]

v02.61 (C)Copyright 1985-2007, American Megatrends, Inc.
```

FIGURE A-21 BIOS Setup Utility: Server - Bottom of Scroll

```
                    BIOS SETUP UTILITY
Main    Advanced    Boot    Server    Security    Exit

IPMI Specification Version   2.0          Fatal: Fatal error
BMC Firmware Version         00 00.91      issue NMI.
CPLD Revision                0.41         Uncorrectable: Fatal
                                           and Uncorrectable
▶ Set AST2000 LAN Configuration            errors issue NMI.
▶ Remote Access Configuration              Correctable: To issue
                                           NMI on all errors.
Restore on AC Power Loss     [Last State]

Event Control Interface

View Event Log
Clear BMC System Event Log                 ←    Select Screen
                                           ↑↓   Select Item
Event Logging                [Enabled]     +-   Change Option
ECC Event Logging            [Enabled]     F1   General Help
PCI Error Logging            [Enabled]     F10  Save and Exit
NB FSB Error Logging         [Enabled]     ESC  Exit
NB Internal Error Logging    [Enabled]
NMI on Error                 [Fatal]

v02.61 (C)Copyright 1985-2007, American Megatrends, Inc.
```

FIGURE A-22 BIOS Setup Utility: Server - LAN Configuration

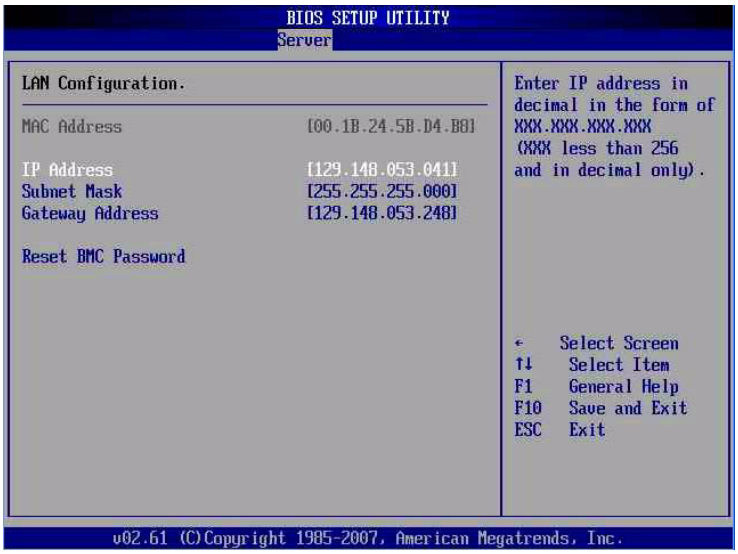

FIGURE A-23 BIOS Setup Utility: Server - LAN Configuration - Reset SP (BMC) Password

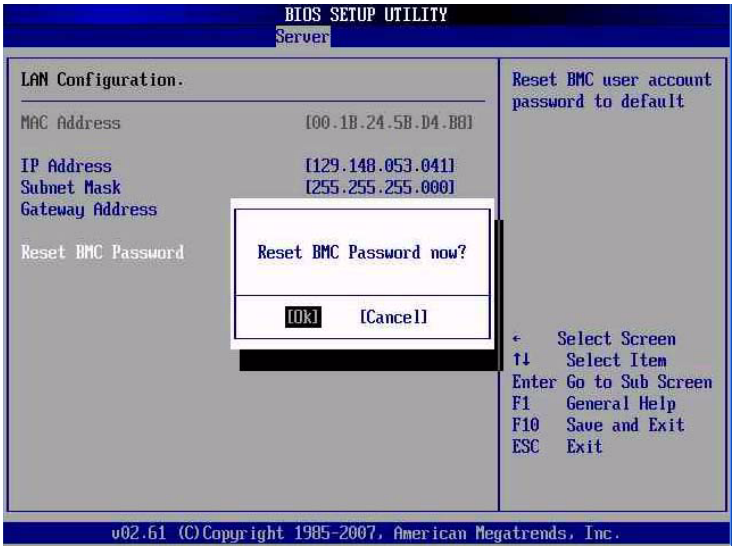

FIGURE A-24 BIOS Setup Utility: Server - Configure Remote Access

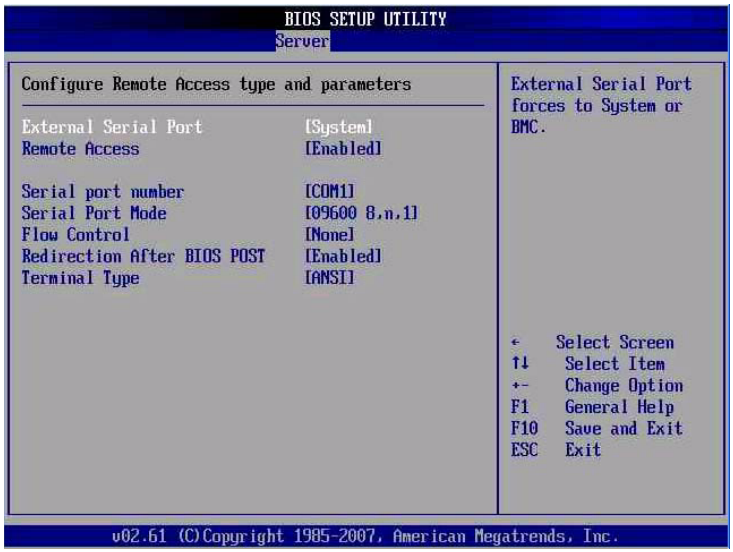

FIGURE A-25 Bios Setup Utility: Server - View Event Log

FIGURE A-26 BIOS Setup Utility: Server - Clear BMC Event Log

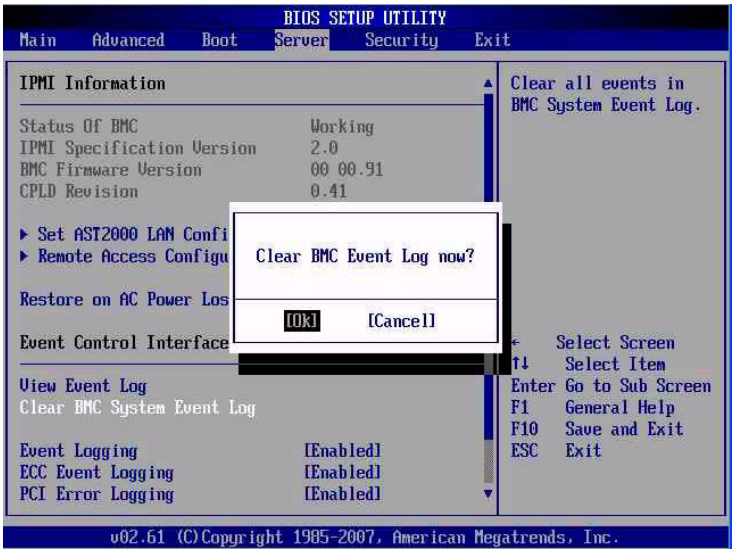

A.3.1.5 BIOS Security Menu Screens

The BIOS Security screens enable you to set or change the user and supervisor passwords.

The Sun Netra X4450 has the following BIOS Security screens:

FIGURE A-27 BIOS Setup Utility: Security - Change Supervisor Password

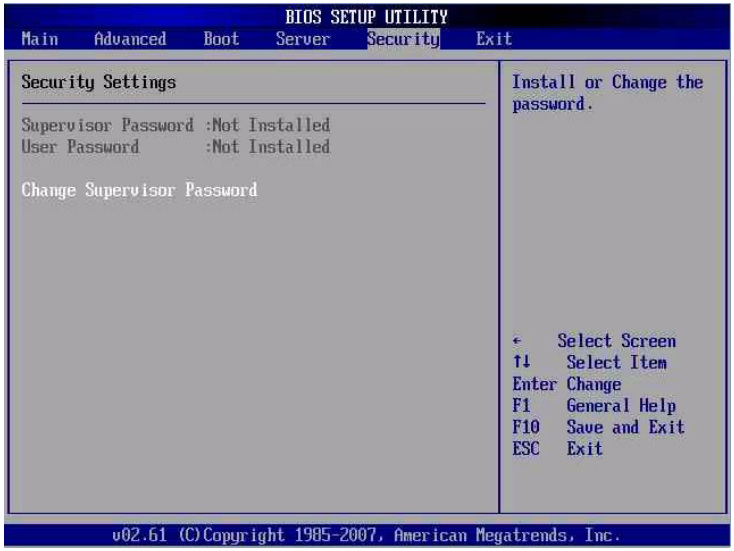

A.3.1.6 BIOS Exit Menu Screens

The BIOS Exit screens enable you to save changes and exit, discard changes and exit, discard changes, or load optimal or fail-safe defaults.

The Sun Netra X4450 has the following BIOS Exit screens:

FIGURE A-28 BIOS Setup Utility: Exit

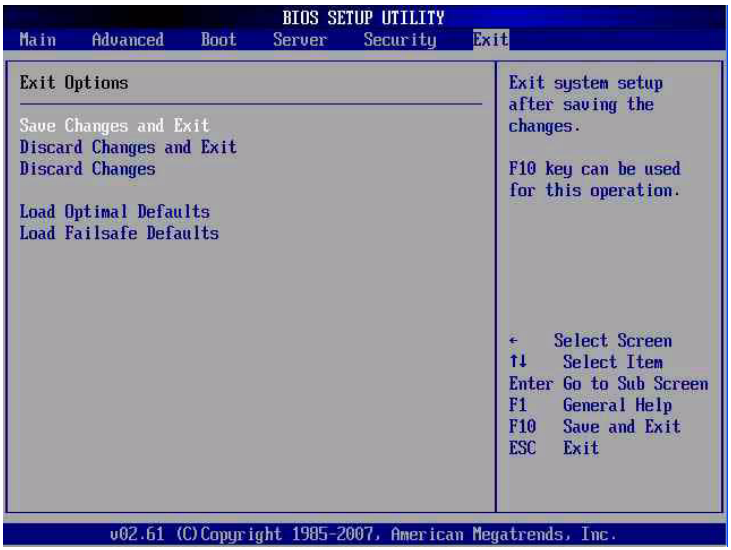

FIGURE A-29 BIOS Setup Utility: Exit - Save Configuration Changes

FIGURE A-30 BIOS Setup Utility: Exit - Discard Changes

FIGURE A-31 BIOS Setup Utility: Exit - Discard Changes, Do Not Exit

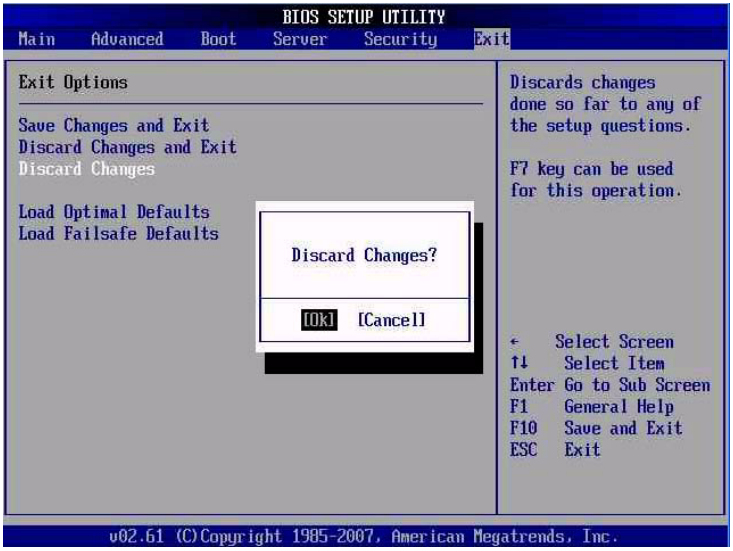

FIGURE A-32 BIOS Setup Utility: Exit - Load Optimal Defaults

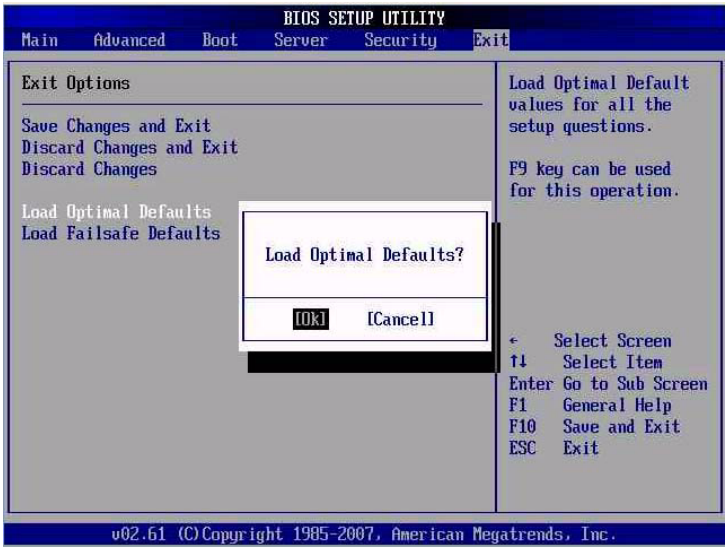

FIGURE A-33 BIOS Setup Utility: Exit - Load Fail-Safe Defaults

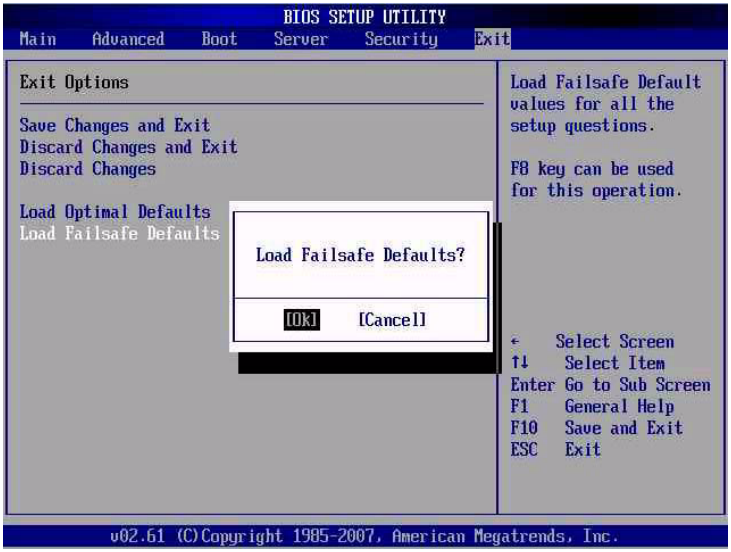

A.4 Viewing Event Logs

Use the procedure in this section to view the BIOS event log and the BMC system event log.

View Event Logs

1. **Enter the BIOS Setup utility by pressing the F2 key while the system is performing the power-on self-test (POST).**

   The BIOS Main menu screen is displayed.

2. **From the BIOS Main menu screen, select Advanced.**

   The Advanced Settings screen is displayed.

3. **From the Advanced Settings screen, select Event Log Configuration.**

   The Advanced Menu Event Logging Details screen is displayed.

4. **From the Event Logging Details screen, select View Event Log.**

   All unread events are displayed.

A.5 Power-On Self-Test (POST)

The system BIOS provides a rudimentary power-on self-test. The basic devices required for the server to operate are checked, memory is tested, the disk controller and attached disks are probed and enumerated, and the two Intel dual Gigabit Ethernet controllers are initialized.

The progress of the self-test is indicated by a series of POST codes. These codes are displayed at the bottom right corner of the system's VGA screen (once the self-test has progressed far enough to initialize the system video). However, the codes are displayed as the self-test runs and scroll off of the screen too quickly to be read. An alternate method of displaying the POST codes is to redirect the output of the console to a serial port (see Section "Redirect Console Output" on page A-32).

A.5.1 How BIOS POST Memory Testing Works

The BIOS POST memory testing is performed as follows:

1. The first megabyte of DRAM is tested by the BIOS before the BIOS code is shadowed (that is, copied from ROM to DRAM).
2. Once executing out of DRAM, the BIOS performs a simple memory test (a write-read of every location with the pattern `55aa55aa`).

Note – Enabling Quick Boot causes the BIOS to skip the memory test. See Section "Change POST Options" on page A-33 for more information.

Note – Because the server can contain up to 64 MByte of memory, the memory test can take several minutes. You can cancel POST testing by pressing any key during POST.

---

3. The BIOS polls the memory controllers for both correctable and uncorrectable memory errors and logs those errors into the service processor.

Redirect Console Output

Use the following instructions to access the service processor and redirect the console output so that the BIOS POST codes can be read.

1. **Initialize the BIOS Setup utility by pressing the F2 key while the system is performing the power-on self-test (POST).**

   The BIOS Main menu screen is displayed.

2. **Select the Advanced menu tab.**

   The Advanced Settings screen is displayed.

3. **Select IPMI 2.0 Configuration.**

   The IPMI 2.0 Configuration screen is displayed.

4. **Select the LAN Configuration menu item.**

   The LAN Configuration screen displays the service processor's IP address.

5. **To configure the service processor's IP address (optional):**

   a. **Select the IP Assignment option that you want to use (DHCP or Static).**

- If you choose DHCP, the server's IP address is retrieved from your network's DHCP server and displayed using the following format: `Current IP address in BMC : xxx.xxx.xxx.xxx`
- If you choose Static to assign the IP address manually, perform the following steps:

i. **Type the IP address in the IP Address field.**

   You can also enter the subnet mask and default gateway settings in their respective fields.

ii. **Select Commit and press Return to commit the changes.**

iii. **Select Refresh and press Return to see your new settings displayed in the Current IP address in BMC field.**

6. **Start a web browser and type the service processor's IP address in the browser's URL field.**

7. **When you are prompted for a user name and password, type the following:**
   - User Name: **`root`**
   - Password: *password*

   The Sun Integrated Lights Out Manager main GUI screen is displayed.

8. **Click the Remote Control tab.**

9. **Click the Redirection tab.**

10. **Set the color depth for the redirection console at either 6 or 8 bits.**

    Click the Start Redirection button.

11. **When you are prompted for a user name and password, type the following:**
    - User Name: **`root`**
    - Password: *password*

    The current POST screen is displayed.

Change POST Options

These instructions are optional, but you can use them to change the operations that the server performs during POST testing. To change POST options:

1. **Initialize the BIOS Setup utility by pressing the F2 key while the system is performing the power-on self-test (POST).**

   The BIOS Main menu screen is displayed.

2. **Select Boot.**

3. **Select Boot Settings Configuration.**

4. **On the Boot Settings Configuration screen, there are several options that you can enable or disable:**
   - **Quick Boot** – This option is disabled by default. If you enable this option, the BIOS skips certain tests while booting, such as the extensive memory test. This action decreases the time it takes for the system to boot.
   - **Quiet Boot** – This option is disabled by default. If you enable this option, the Sun Microsystems logo is displayed instead of POST codes.
   - **Add On ROM Display Mode** – This option is set to Force BIOS by default. This option has effect only if you have also enabled the Quiet Boot option, but this option controls whether output from the Option ROM is displayed. The two settings for this option are as follows:
   - **Force BIOS** – Remove the Sun logo and display Option ROM output.
   - **Keep Current** – Do not remove the Sun logo. The Option ROM output is not displayed.
   - **Boot Num-Lock** – This option is on by default (keyboard Num-Lock is turned on during boot). If you set this to off, the keyboard Num-Lock is not turned on during boot.
   - **Wait for F1 if Error** – This option is disabled by default. If you enable this option, the system will pause if an error is found during POST and will only resume when you press the F1 key.
   - **Interrupt 19 Capture** – This option is reserved for future use. Do not change.
   - **Default Boot Order** – The letters in the brackets represent the boot devices. To see the letters defined, position your cursor over the field and read the definition in the right side of the screen.

A.5.2 POST Codes

TABLE A-3 contains descriptions of each of the POST codes, listed in the same order in which they are generated. These POST codes appear as a four-digit string that is a combination of two-digit output from primary I/O port 80 and two-digit output from secondary I/O port 81. In the POST codes listed in TABLE A-3, the first two digits are from port 81 and the last two digits are from port 80.

TABLE A-3 POST Codes

Post Code	Description
`00d0`	Coming out of POR, PCI configuration space initialization, enabling 8111's SMBus.
`00d1`	Keyboard controller BAT, waking up from PM, saving power-on CPUID in scratch CMOS.
`00d2`	Disabling cache, full memory sizing, and verifying that flat mode is enabled.

TABLE A-3 POST Codes *(Continued)*

Post Code	Description
00d3	Memory detections and sizing in boot block, cache disabled, I/O APIC enabled.
01d4	Testing base 512KB memory. Adjusting policies and cache first 8MB.
01d5	Boot block code is copied from ROM to lower RAM. BIOS is now executing out of RAM.
01d6	Key sequence and OEM specific method is checked to determine if BIOS recovery is forced. If next code is E0, BIOS recovery is being executed. Main BIOS checksum is tested.
01d7	Restoring CPUID: Moving boot block-runtime interface module to RAM: determining whether to execute serial flash.
01d8	Decompressing runtime module into RAM. Storing CPUID information in memory.
01d9	Copying main BIOS into memory.
01da	Giving control to BIOS POST.
0004	Checking CMOS diagnostic byte to determine if battery power is OK and CMOS checksum is OK. If the CMOS checksum is bad, update CMOS with power-on default values.
00c2	Setting up boot strap processor for POST. This action includes frequency calculation, loading BSP microcode, and applying user requested value for GART Error Reporting setup question.
00c3	Errata workarounds applied to the BSP (No. 78 and No. 110).
00c6	Re-enable cache for boot strap processor, and apply workarounds in the BSP for errata No. 106, No. 107, No. 69, and No. 63 if appropriate.
00c7	HT sets link frequencies and widths to their final values.
000a	Initializing the 8042 compatible keyboard controller.
000c	Detecting the presence of keyboard in KBC port.
000e	Testing and initialization of different input devices. Traps the INT09h vector, so that the POST INT09h handler gets control for IRQ1.
8600	Preparing CPU for booting to OS by copying all of the context of the BSP to all application processors present. Note: APs are left in the CLI HLT state.
de00	Preparing CPU for booting to OS by copying all of the context of the BSP to all application processors present. Note: APs are left in the CLI HLT state.
8613	Initializing PM regs and PM PCI regs at early-POST. Initialize multihost bridge, if system supports it. Setup ECC options before memory clearing. Enable PCI-X clock lines in the 8131.
0024	Decompressing and initializing any platform specific BIOS modules.
862a	BBS ROM initialization.
002a	Generic Device Initialization Manager (DIM) - Disable all devices.
042a	ISA PnP devices - Disable all devices.

TABLE A-3 POST Codes *(Continued)*

Post Code	Description
052a	PCI devices - Disable all devices.
122a	ISA devices - Static device initialization.
152a	PCI devices - Static device initialization.
252a	PCI devices - Output device initialization.
202c	Initializing different devices. Detecting and initializing the video adapter installed in the system that have optional ROMs.
002e	Initializing all the output devices.
0033	Initializing the silent boot module. Set the window for displaying text information.
0037	Displaying sign-on message, CPU information, setup key message, and any OEM specific information.
4538	PCI devices - IPL device initialization.
5538	PCI devices - General device initialization.
8600	Preparing CPU for booting to OS by copying all of the context of the BSP to all application processors present. Note: APs are left in the CLI HLT state.

A.5.3 POST Code Checkpoints

The POST code checkpoints are the largest set of checkpoints during the BIOS pre-boot process. TABLE A-4 describes the type of checkpoints that might occur during the POST portion of the BIOS. These two-digit checkpoints are the output from primary I/O port 80.

TABLE A-4 POST Code Checkpoints

Post Code	Description
03	Global initialization before the execution of actual BIOS POST. Initialize BIOS Data Area (BDA) variables to their default values. Initialize POST data variables. NMI, parity, video for EGA, and DMA controllers are disabled at this point.
04	Checks CMOS diagnostic byte to verify that battery power and CMOS checksum is OK. Verify CMOS checksum manually by reading storage area. If the CMOS checksum is bad, update CMOS with power-on default values and clear passwords. Initialize status register A. Initializes data variables that are based on CMOS setup questions. Initializes both the 8259 compatible PICs in the system.
05	Initializes the interrupt controlling hardware (generally PIC) and interrupt vector table.

TABLE A-4 POST Code Checkpoints *(Continued)*

Post Code	Description
06	Does read-write test to CH-2 count reg. Initialize CH-0 as system timer. Install the POSTINT1Ch handler. Enable IRQ-0 in PIC for system timer interrupt. Traps INT1Ch vector to POSTINT1ChHandlerBlock.
C0	Early CPU Init Start-Disable Cache-Init Local APIC.
C1	Sets up boot strap processor information.
C2	Sets up boot strap processor for POST. This action includes frequency calculation, loading BSP microcode, and applying user requested value for GART Error Reporting setup question.
C3	Errata workarounds applied to the BSP (No. 78 & No. 110).
C5	Enumerates and sets up application processors. This action includes microcode loading, and workarounds for errata (No. 78, No. 110, No. 106, No. 107, No. 69, No. 63).
C6	Re-enable cache for boot strap processor, and apply workarounds in the BSP for errata No. 106, No. 107, No. 69, and No. 63 if appropriate. In case of mixed CPU steppings, errors are sought and logged, and an appropriate frequency for all CPUs is found and applied. Note: APs are left in the CLI HLT state.
C7	The HT sets link frequencies and widths to their final values. This routine gets called after CPU frequency has been calculated to prevent bad programming.
0A	Initializes the 8042 compatible keyboard controller.
0B	Detects the presence of PS/2 mouse.
0C	Detects the presence of keyboard in KBC port.
0E	Testing and initialization of different input Devices. Also, update the kernel variables. Traps the INT09h vector, so that the POST INT09h handler gets control for IRQ1. Decompress all available language, BIOS logo, and silent logo modules.
13	Initializes PM regs and PM PCI regs at Early-POST. Initialize multihost bridge, if system supports it. Set up ECC options before memory clearing. REDIRECTION causes corrected data to written to RAM immediately. CHIPKILL provides 4 bit error `det/corr` of x4 type memory. Enable PCI-X clock lines in the 8131.
20	Relocates all the CPUs to a unique SMBASE address. The BSP will be set to have its entry point at A000:0. If fewer than 5 CPU sockets are present on a board, subsequent CPUs entry points will be separated by 8000h bytes. If more than 4 CPU sockets are present, entry points are separated by 200h bytes. CPU module will be responsible for the relocation of the CPU to correct address. Note: APs are left in the INIT state.
24	Decompresses and initializes any platform specific BIOS modules.
30	Initializes System Management Interrupt.
2A	Initializes different devices through DIM.
2C	Initializes different devices. Detects and initializes the video adapter installed in the system that have optional ROMs.

TABLE A-4 POST Code Checkpoints *(Continued)*

Post Code	Description
2E	Initializes all the output devices.
31	Allocates memory for ADM module and decompress it. Gives control to ADM module for initialization. Initializes language and font modules for ADM. Activate ADM module.
33	Initializes the silent boot module. Set the window for displaying text information.
37	Displaying sign-on message, CPU information, setup key message, and any OEM specific information.
38	Initializes different devices through DIM.
39	Initializes DMAC-1 and DMAC-2.
3A	Initializes RTC date and time.
3B	Tests for total memory installed in the system. Also, Check for DEL or ESC keys to limit memory test. Displays total memory in the system.
3C	By this point, RAM read-write test is completed, program memory holes or handle any adjustments needed in RAM size with respect to NB. Tests if HT module found an error in boot block and CPU compatibility for MP environment.
40	Detects different devices (Parallel ports, serial ports, and coprocessor in CPU, etc.) successfully installed in the system and update the BDA, EBDA, etc.
50	Programming the memory hole or any kind of implementation that needs an adjustment in system RAM size if needed.
52	Updates CMOS memory size from memory found in memory test. Allocates memory for Extended BIOS Data Area from base memory.
60	Initializes NUM-LOCK status and programs the KBD typematic rate.
75	Initializes Int-13 and prepares for IPL detection.
78	Initializes IPL devices controlled by BIOS and option ROMs.
7A	Initializes remaining option ROMs.
7C	Generates and writes contents of ESCD in NVRAM.
84	Logs errors encountered during POST.
85	Displays errors to the user and gets the user response for error.
87	Executes BIOS setup if needed or requested.
8C	After all device initialization is done, programmed any user selectable parameters relating to NB/SB, such as timing parameters, noncacheable regions, and the shadow RAM cacheability, and do any other NB/SB/PCIX/OEM specific programming needed during Late-POST. Background scrubbing for DRAM, and L1 and L2 caches are set up based on setup questions. Get the DRAM scrub limits from each node. Workaround for erratum No. 101 applied here.
8D	Builds ACPI tables (if ACPI is supported).

TABLE A-4 POST Code Checkpoints *(Continued)*

Post Code	Description
8E	Programs the peripheral parameters. Enable/Disable NMI as selected.
90	Late POST initialization of system management interrupt.
A0	Checks boot password if installed.
A1	Clean-up work needed before booting to OS.
A2	Takes care of runtime image preparation for different BIOS modules. Fills the free area in F000h segment with 0FFh. Initializes the Microsoft IRQ routing table. Prepares the runtime language module. Disables the system configuration display if needed.
A4	Initializes runtime language module.
A7	Displays the system configuration screen if enabled. Initializes the CPUs before boot, which includes the programming of the MTRRs.
A8	Prepares CPU for OS boot including final MTRR values.
A9	Waits for user input at config display if needed.
AA	Uninstalls POST INT1Ch vector and INT09h vector. Deinitializes the ADM module.
AB	Prepares BBS for Int 19 boot.
AC	Any kind of chipsets (NB/SB) specific programming needed during End- POST, just before giving control to runtime code booting to OS. Programmed the system BIOS (0F0000h shadow RAM) cacheability. Ported to handle any OEM specific programming needed during End-POST. Copies OEM specific data from POST_DSEG to RUN_CSEG.
B1	Saves system context for ACPI.
00	Prepares CPU for booting to OS by copying all of the context of the BSP to all application processors present. Note: APs are left in the CLIHLT state.
61-70	OEM POST error. This range is reserved for chipset vendors and system manufacturers. The error associated with this value might be different from one platform to the next.

APPENDIX **A**

Signal Pinouts

This appendix gives the pinouts for the server rear ports and identifies connectors on various server boards. Topics include:

A.1 Gigabit Ethernet Ports

The server has four autonegotiating 10/100/1000BASE-T Gigabit Ethernet system domain ports. All four Ethernet ports use a standard RJ-45 connector, the transfer rates for which are given in TABLE A-1. FIGURE A-1 shows the pin numbering of the ports. TABLE A-2 describes the pin signals.

TABLE A-1 Ethernet Connection Transfer Rates

Connection Type	IEEE Terminology	Transfer Rate
Ethernet	10BASE-T	10 Mbit/sec
Fast Ethernet	100BASE-TX	100 Mbits/sec
Gigabit Ethernet	1000BASE-T	1000 Mbit/sec

FIGURE A-1 Gigabit Ethernet Port Pin Numbering

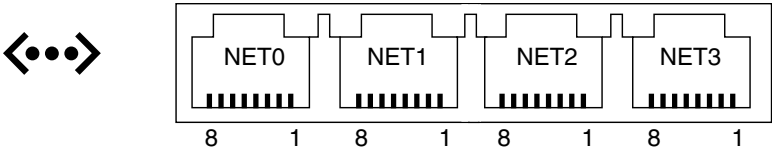

TABLE A-2 Gigabit Ethernet Port Signals

Pin	Signal Description	Pin	Signal Description
1	Transmit/Receive Data 0 +	5	Transmit/Receive Data 2 –
2	Transmit/Receive Data 0 –	6	Transmit/Receive Data 1 –
3	Transmit/Receive Data 1 +	7	Transmit/Receive Data 3 +
4	Transmit/Receive Data 2 +	8	Transmit/Receive Data 3 –

A.2 Network Management Port

The server has one 10BASE-T Ethernet management domain interface, labelled NET MGT.

Caution – If you are planning to use the network management (NET MGT) port, you must use a shielded Ethernet cable to maintain your server's NEBS compliance. The cable's shield must be grounded at both ends.

FIGURE A-2 Network Management Port Pin Numbering

TABLE A-3 Network Management Connector Signals

Pin	Signal Description	Pin	Signal Description
1	Transmit Data +	5	Common Mode Termination
2	Transmit Data –	6	Receive Data –
3	Receive Data +	7	Common Mode Termination
4	Common Mode Termination	8	Common Mode Termination

A.3 Serial Ports

The server has two serial ports, labeled SERIAL MGT and TTYA. TABLE A-4 lists the default serial connection settings for both serial ports.

TABLE A-4 Default Serial Connection Settings

Parameter	Setting
Connector	SERIAL MGT or l0l0l
Rate	9600 baud
Parity	None
Stop bits	1
Data bits	8

A.3.1 Serial Management Port

The serial management connector (labeled SER MGT) is an RJ-45 connector that can be accessed from the rear panel. This port is the default connection to the server. Use this port *only* for server management.

Caution – You must use a shielded Ethernet cable to maintain your server's NEBS compliance. The cable's shield must be grounded at both ends.

FIGURE A-3 shows the pin numbering of the serial management port. TABLE A-5 describes the pin signals.

FIGURE A-3 Serial Management Port Pin Numbering

TABLE A-5 Serial Management RJ-45 Connector Signals

Pin	Signal Description	Pin	Signal Description
1	Request to Send	5	Ground
2	Data Terminal Ready	6	Receive Data
3	Transmit Data	7	Data Set Ready
4	Ground	8	Clear to Send

If you need to connect to the SERIAL MGT port using a cable with either a DB-9 or a DB-25 connector, use a supplied adapter to perform the crossovers given for each connector. The supplied RJ-45 to DB-9 and RJ-45 to DB-25 adapters are wired as described in TABLE A-6 and TABLE A-7.

A.3.1.1 RJ-45 to DB-9 Adapter Crossovers

TABLE A-6 RJ-45 to DB-9 Adapter Crossovers

Serial Port (RJ-45 Connector)		DB-9 Adapter	
Pin	**Signal Description**	**Pin**	**Signal Description**
1	RTS	8	CTS
2	DTR	6	DSR
3	TXD	2	RXD
4	Signal Ground	5	Signal Ground
5	Signal Ground	5	Signal Ground
6	RXD	3	TXD
7	DSR	4	DTR
8	CTS	7	RTS

A.3.1.2 RJ-45 to DB-25 Adapter Crossovers

TABLE A-7 RJ-45 to DB-25 Adapter Crossovers

Serial Port (RJ-45 Connector)		DB-25 Adapter	
Pin	**Signal Description**	**Pin**	**Signal Description**
1	RTS	5	CTS
2	DTR	6	DSR
3	TXD	3	RXD
4	Signal Ground	7	Signal Ground
5	Signal Ground	7	Signal Ground
6	RXD	2	TXD
7	DSR	20	DTR
8	CTS	4	RTS

A.3.2 Serial Port TTYA

The port labeled TTYA accepts a DB-9 connector. Use this port for general purpose serial data transfers. FIGURE A-4 shows the pin numbering of the serial port. TABLE A-8 describes the pin signals.

FIGURE A-4 Serial Port (TTYA) Pin Numbering

TABLE A-8 Serial Port (TTYA) Connector Signals

Pin	Signal Description	Pin	Signal Description
1	Data Carrier Detect	6	Data Set Ready
2	Receive Data	7	Request to Send
3	Transmit Data	8	Clear to Send
4	Data Terminal Ready	9	Ring Indicate
5	Ground		

A.4 Alarm Port

The alarm port on the alarm rear transition module uses a standard DB-15 connector. In a telecommunications environment, use this port to connect to the central office alarming system. FIGURE A-5 shows the pin numbering of the alarm port. TABLE A-9 describes the pin signals.

Note – The alarm port relay contacts are rated for 100V 0.2A maximum.

FIGURE A-5 Alarm Port Pin Numbering

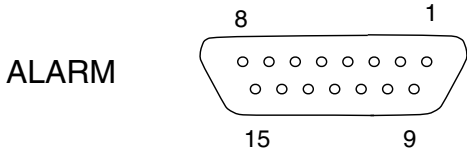

TABLE A-9 Alarm Connector Signals

Pin	Service	Pin	Service
1	NC	9	ALARM1_NC
2	NC	10	ALARM1_COM
3	NC	11	ALARM2_NO
4	NC	12	ALARM2_NC
5	ALARM0_NO	13	ALARM2_COM
6	ALARM0_NC	14	ALARM3_NO
7	ALARM0_COM	15	ALARM3_COM
8	ALARM1_NO	CHASSIS	FRAME GND

A.5 USB Ports

The server has two USB ports for attaching supported USB 1.1 compliant devices. FIGURE A-6 shows the pin numbering of the USB ports. TABLE A-10 describes the pin signals.

FIGURE A-6 USB Ports Pin Numbering

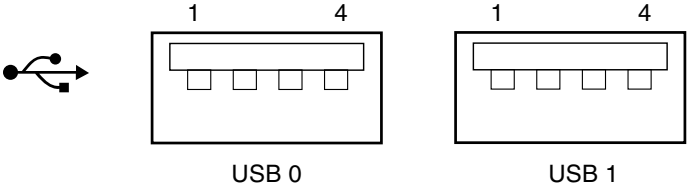

TABLE A-10 USB Connector Pin Signals

Pin	Signal Description
1	+5 V
2	DAT-
3	DAT+
4	Ground

Index

F

G

H

I

L

M

N

O

P

Q

R

S

T

U

W