SPARC T3-4 Server

Service Manual

Part No.: E20813-02
August 2011, Revision A

Please Recycle

Adobe PostScript

Contents

Using This Documentation

This service manual is for experienced system engineers with training in servicing Oracle's SPARC T3-4 servers. The manual contains detailed instructions for troubleshooting, repairing, and upgrading server components. To use the information in this document, you must have experience working with advanced server technology.

Note – All internal components except hard drives must be installed by qualified service technicians only.

- "Related Documentation" on page xi
- "Feedback" on page xii
- "Support and Accessibility" on page xii

Related Documentation

Documentation	Links
All Oracle products	http://www.oracle.com/documentation
SPARC T3-4 server	http://www.oracle.com/pls/topic/lookup?ctx=E19417-01&id=homepage
Integrated Lights Out Manager (ILOM) 3.0	http://www.oracle.com/pls/topic/lookup?ctx=E19860-01&id=homepage

Feedback

Provide feedback on this documentation at:

http://www.oracle.com/goto/docfeedback

Support and Accessibility

Description	Links
Access electronic support through My Oracle Support	http://support.oracle.com For hearing impaired: http://www.oracle.com/accessibility/support.html
Learn about Oracle's commitment to accessibility	http://www.oracle.com/us/corporate/accessibility/index.html

Identifying Server Components

These topics identify key components of the SPARC T3-4 server, including major boards and internal system cables, as well as front and rear panel features.

Front Components

FIGURE: Front Components

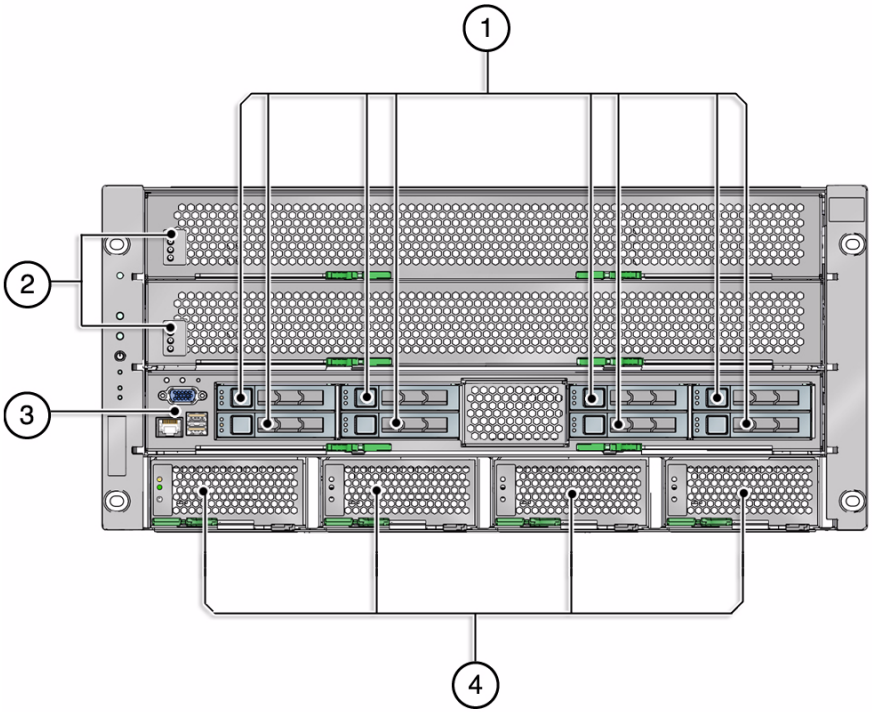

Figure Legend

1	Hard drives (8)
2	Processor modules (2)
3	Main module
4	Power supplies (4)

Related Information

- "Servicing Hard Drives" on page 109
- "Servicing Processor Modules" on page 75
- "Accessing Main Module Components" on page 70
- "Servicing the Main Module Motherboard" on page 197

■ "Servicing Power Supplies" on page 119

Main Module Components

These components are accessible within the main module when you remove the main module from the front of the server.

FIGURE: Main Module Components

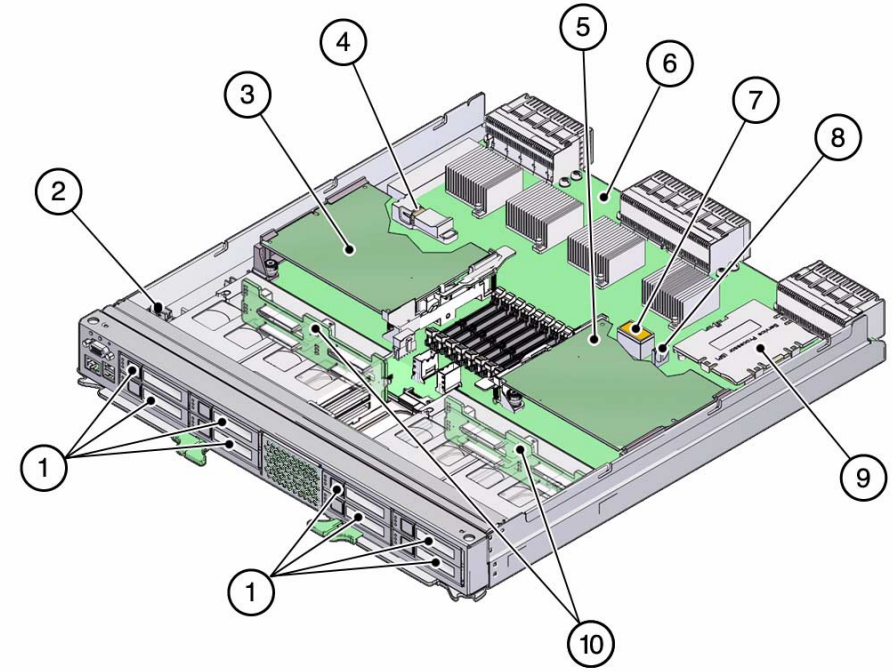

Figure Legend

1	Hard drives (8)
2	Front I/O assembly and cables
3	RAID expansion module 1
4	Internal USB connectors (not supported)
5	RAID expansion module 0

Figure Legend *(Continued)*

6	Main module motherboard
7	System configuration PROM
8	System battery
9	Service processor
10	Storage backplanes and cables

Related Information

- "Accessing Main Module Components" on page 70
- "Servicing Hard Drives" on page 109
- "Servicing the Front I/O Assembly" on page 183
- "Servicing RAID Expansion Modules" on page 131
- "Servicing the Main Module Motherboard" on page 197
- "Servicing the System Configuration PROM" on page 177
- "Servicing the System Battery" on page 141
- "Servicing the Service Processor" on page 135
- "Servicing the Storage Backplane" on page 189

Processor Module Components

These components are accessible within the processor module when you remove the processor module from the front of the server.

FIGURE: Processor Module Components

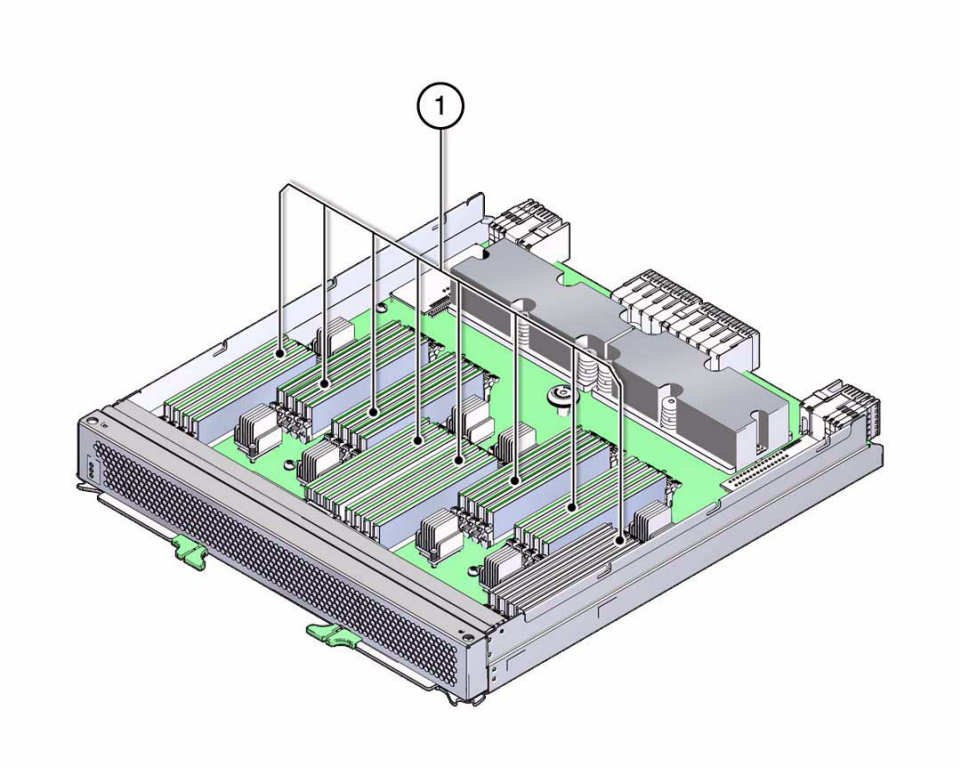

Figure Legend

1	DIMMs

Related Information

- "Servicing Processor Modules" on page 75
- "Servicing DIMMs" on page 89

Rear Components

FIGURE: Rear Components

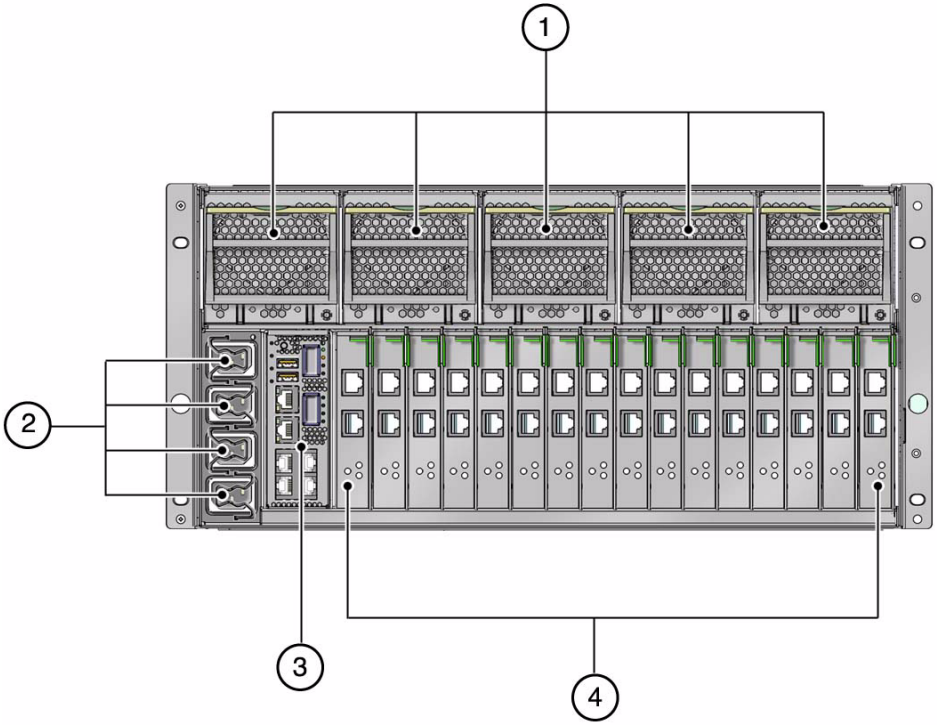

Figure Legend

1	Fan modules (5)
2	AC power connectors (4)
3	Rear I/O module
4	Express module slots (16)

The following figure shows the components that are accessible within the rear chassis subassembly, which you would be able to access after you have removed all the components from the rear of the server.

FIGURE: Rear Chassis Subassembly Components

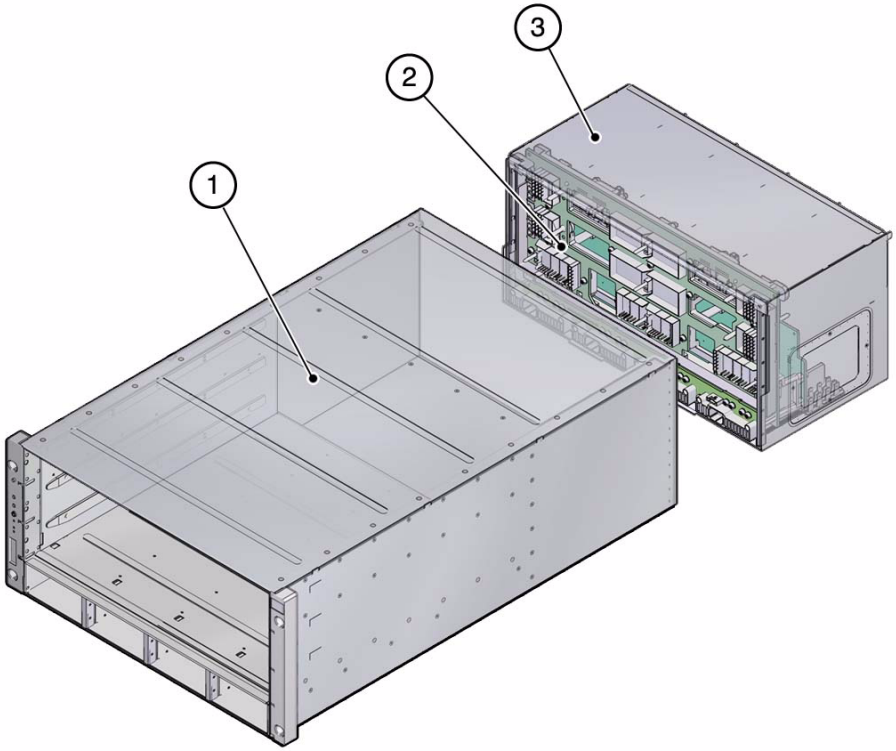

Figure Legend

1	System chassis
2	Midplane
3	Rear chassis subassembly

Related Information

- "Servicing Fan Modules" on page 147
- "Servicing Power Supplies" on page 119
- "Servicing the Rear I/O Module" on page 169
- "Servicing Express Modules" on page 155
- "Servicing the Rear Chassis Subassembly" on page 205

Illustrated Parts Breakdown

FIGURE: Illustrated Parts Breakdown

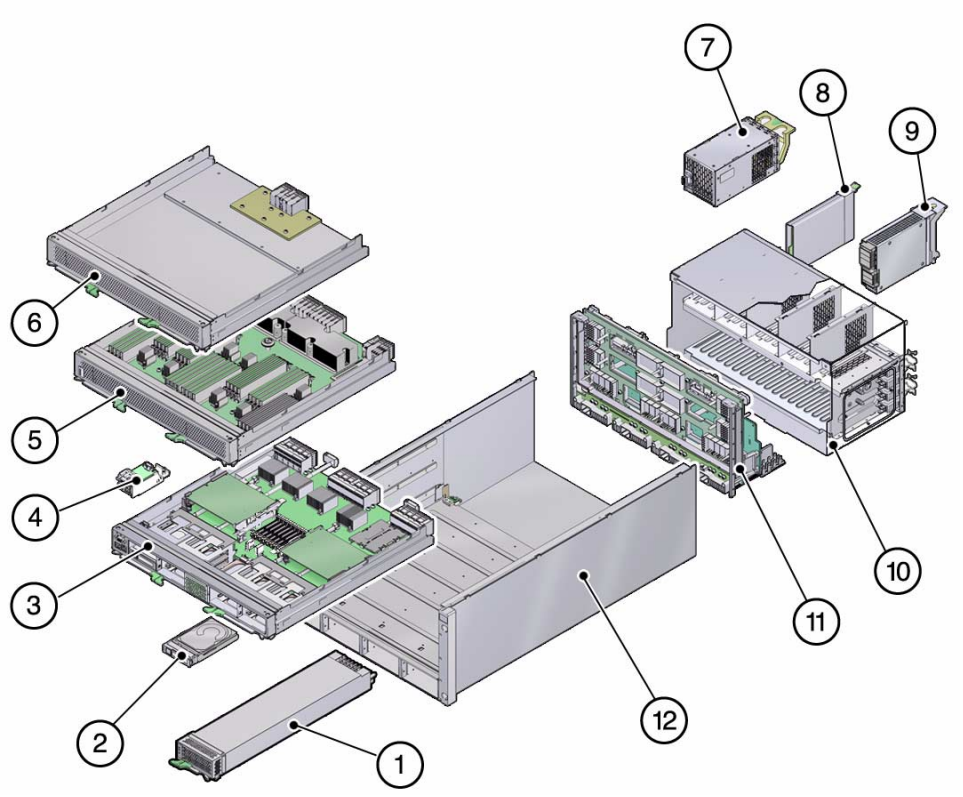

Figure Legend

1	Power supplies (4)
2	Hard drives (8), within the main module
3	Main module
4	Front I/O assembly, within the main module
5	Processor module
6	Processor module filler panel
7	Fan modules (5)
8	Express modules (16)
9	Rear I/O module

Figure Legend *(Continued)*

10	Rear chassis subassembly
11	Midplane, part of the rear chassis subassembly
12	SPARC T3-4 chassis

Related Information

- "Servicing Processor Modules" on page 75
- "Servicing DIMMs" on page 89
- "Servicing Hard Drives" on page 109
- "Servicing Power Supplies" on page 119
- "Servicing RAID Expansion Modules" on page 131
- "Servicing the Service Processor" on page 135
- "Servicing the System Battery" on page 141
- "Servicing Fan Modules" on page 147
- "Servicing Express Modules" on page 155
- "Servicing the Rear I/O Module" on page 169
- "Servicing the System Configuration PROM" on page 177
- "Servicing the Front I/O Assembly" on page 183
- "Servicing the Storage Backplane" on page 189
- "Servicing the Main Module Motherboard" on page 197
- "Servicing the Rear Chassis Subassembly" on page 205

Detecting and Managing Faults

These topics explain how to use various diagnostic tools to monitor server status and troubleshoot faults in the server.

Diagnostics Overview

You can use a variety of diagnostic tools, commands, and indicators to monitor and troubleshoot a server:

- **LEDs** – Provide a quick visual notification of the status of the server and of some of the FRUs.
- **Integrated Lights Out Manager** – The ILOM firmware runs on the service processor. In addition to providing the interface between the hardware and OS, ILOM also tracks and reports the health of key server components. ILOM works closely with POST and Oracle Solaris Predictive Self-Healing technology to keep the system running even when there is a faulty component.
- **Power-on self-test** – POST performs diagnostics on system components upon system reset to ensure the integrity of those components. POST is configureable and works with ILOM to take faulty components offline if needed.

- **Oracle Solaris OS Predictive Self-Healing** - The PSH technology continuously monitors the health of the CPU, memory and other components, and works with ILOM to take a faulty component offline if needed. The PSH technology enables systems to accurately predict component failures and mitigate many serious problems before they occur.
- **Log files and command interface** – Provide the standard Oracle Solaris OS log files and investigative commands that can be accessed and displayed on the device of your choice.
- **SunVTS** – An application that exercises the system, provides hardware validation, and discloses possible faulty components with recommendations for repair.

The LEDs, ILOM, PSH, and many of the log files and console messages are integrated. For example, when the Oracle Solaris software detects a fault, it displays the fault, logs it, and passes information to ILOM where it is logged. Depending on the fault, one or more LEDs might also be illuminated.

The diagnostic flow chart in "Diagnostics Process" on page 12 describes an approach for using the server diagnostics to identify a faulty field-replaceable unit (FRU). The diagnostics you use, and the order in which you use them, depend on the nature of the problem you are troubleshooting. So you might perform some actions and not others.

Related Information

- "Diagnostics Process" on page 12
- "Interpreting Diagnostic LEDs" on page 16
- "Managing Faults (ILOM)" on page 22
- "Interpreting Log Files and System Messages" on page 35
- "Using Oracle Solaris Predictive Self-Healing" on page 37
- "Running POST" on page 42
- "Managing Components (ASR)" on page 52
- "Verifying SunVTS Installation" on page 56

Diagnostics Process

The following flowchart illustrates the complementary relationship of the different diagnostic tools and indicates a default sequence of use.

FIGURE: Diagnostics Flowchart

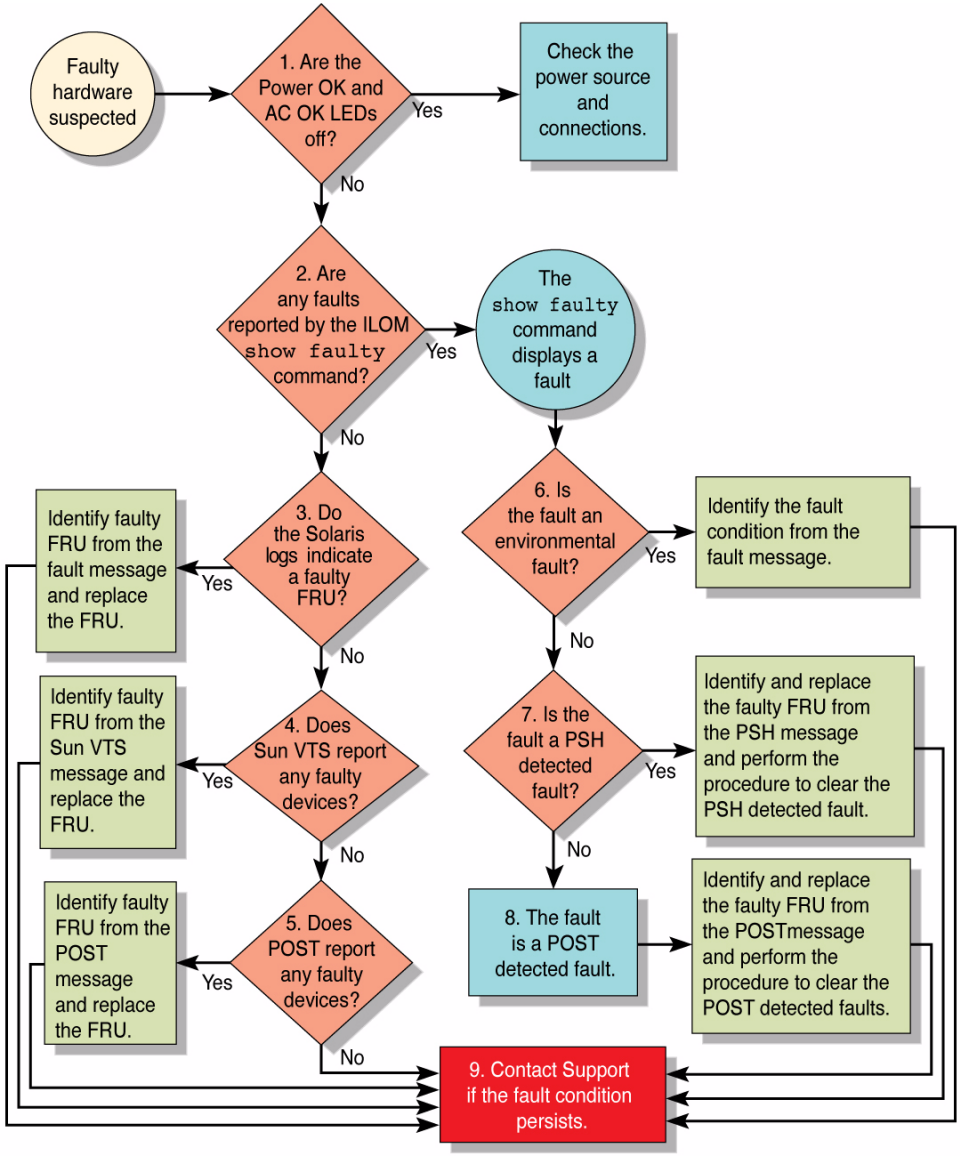

The following table provides brief descriptions of the troubleshooting actions shown in the flowchart. It also provides links to topics with additional information on each diagnostic action.

TABLE: Diagnostic Flowchart Reference Table

Flowchart	Diagnostic Action	Possible Outcome	Additional Information
1	Check Power OK and AC Present LEDs on the server.	The Power OK LED is located on the front and rear of the chassis. The AC Present LED is located on the rear of the server on each power supply. If these LEDs are not on, check the power source and power connections to the server.	• "Interpreting Diagnostic LEDs" on page 16
2	Run the ILOM `show faulty` command to check for faults.	The `show faulty` command displays the following kinds of faults: • Environmental faults • PSH-detected faults • POST-detected faults Faulty FRUs are identified in fault messages using the FRU name.	• "Service-Related ILOM Commands" on page 34 • "Check for Faults (show faulty Command)" on page 27
3	Check the Oracle Solaris log files for fault information.	The Oracle Solaris message buffer and log files record system events, and provide information about faults. • If system messages indicate a faulty device, replace the FRU. • For more diagnostic information, review the SunVTS report. (Flowchart item 4)	• "Interpreting Log Files and System Messages" on page 35
4	Run SunVTS software.	SunVTS is an application you can run to exercise and diagnose FRUs. To run SunVTS, the server must be running the Oracle Solaris OS. • If SunVTS reports a faulty device, replace the FRU. • If SunVTS does not report a faulty device, run POST. (Flowchart item 5)	• "Verifying SunVTS Installation" on page 56
5	Run POST.	POST performs basic tests of the server components and reports faulty FRUs.	• "Running POST" on page 42 • "ILOM Properties That Affect POST Behavior" on page 43

TABLE: Diagnostic Flowchart Reference Table *(Continued)*

Flowchart	Diagnostic Action	Possible Outcome	Additional Information
6	Determine if the fault was detected by the ILOM fault management software.	Determine if the fault is an environmental fault or a configuration fault. If the fault listed by the `show faulty` command displays a temperature or voltage fault, then the fault is an environmental fault. Environmental faults can be caused by faulty FRUs (power supply or fan), or by environmental conditions such as ambient temperature that is too high or lack of sufficient airflow through the server. When the environmental condition is corrected, the fault will automatically clear. If the fault indicates that a fan or power supply is bad, you can replace the FRU. You can also use the fault LEDs on the server to identify the faulty FRU (fans and power supplies).	• "Check for Faults (show faulty Command)" on page 27
7	Determine if the fault was detected by PSH.	If the fault displayed included a *uuid* and *sunw-msg-id* property, the fault was detected by the PSH software. If the fault is a PSH-detected fault, refer to the PSH Knowledge Article web site for additional information. The Knowledge Article for the fault is located at the following link: where *message-ID* is the value of the *sunw-msg-id* property displayed by the `show faulty` command. After the FRU is replaced, perform the procedure to clear PSH-detected faults.	• "Using Oracle Solaris Predictive Self-Healing" on page 37 • "Clear PSH-Detected Faults" on page 41
8	Determine if the fault was detected by POST.	POST performs basic tests of the server components and reports faulty FRUs. When POST detects a faulty FRU, it logs the fault, and if possible, takes the FRU offline. POST-detected FRUs display the following text in the fault message: `Forced fail` *reason* In a POST fault message, *reason* is the name of the power-on routine that detected the failure.	• "Running POST" on page 42 • "Clear POST-Detected Faults" on page 49
9	Contact technical support.	The majority of hardware faults are detected by the server's diagnostics. In rare cases a problem might require additional troubleshooting. If you are unable to determine the cause of the problem, contact your service representative for support.	

Related Information

- "Diagnostics Overview" on page 11
- "Interpreting Diagnostic LEDs" on page 16
- "Managing Faults (ILOM)" on page 22
- "Interpreting Log Files and System Messages" on page 35
- "Using Oracle Solaris Predictive Self-Healing" on page 37
- "Running POST" on page 42
- "Managing Components (ASR)" on page 52
- "Verifying SunVTS Installation" on page 56

Interpreting Diagnostic LEDs

Use the following diagnostic LEDs to determine if a component has failed in the server.

TABLE: Interpreting Diagnostic LEDs

Type of LEDs	LED Location	Links
Server-level LEDs	On the front and rear of the server	• "Front Panel System Controls and LEDs" on page 16 • "Rear I/O Module LEDs" on page 19
Component-level LEDs	On each individual component	• "Processor Module LEDs" on page 76 • "Hard Drive LEDs" on page 111 • "Power Supply and AC Power Connector LEDs" on page 122 • "Fan Module LED" on page 149 • "Main Module Motherboard LEDs" on page 198

Front Panel System Controls and LEDs

The system status is represented by six LEDs on the front panel. These LEDs are shown in the following figure and described in the table that follows the figure.

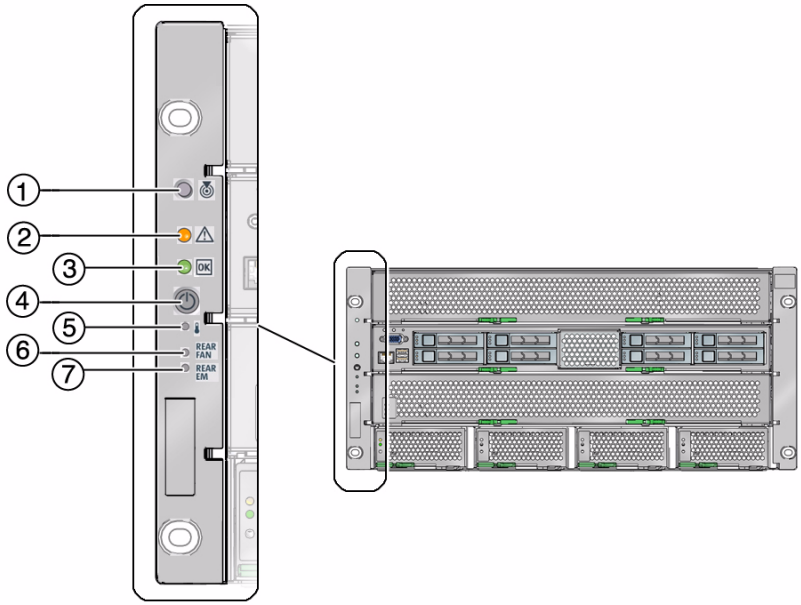
1
2
3
4
5
6
7
OK
REAR FAN
REAR EM

TABLE: Front Panel System Controls and LEDs

No.	LED	Icon	Description
1	System Locator LED and button (white)		The Locator LED can be turned on to identify a particular system. When on, it blinks rapidly. There are two methods for turning a Locator LED on: • Issuing the ILOM command `set /SYS/LOCATE value= Fast_Blink` • Pressing the Locator button.
2	System Service Required LED (amber)		Indicates that service is required. POST and ILOM are two diagnostics tools that can detect a fault or failure resulting in this indication. The ILOM `show faulty` command provides details about any faults that cause this indicator to light. Under some fault conditions, individual component fault LEDs are turned on in addition to the Service Required LED.
3	System Power OK LED (green)	OK	Indicates the following conditions: • Off – System is not running in its normal state. System power might be off. The service processor might be running. • Steady on – System is powered on and is running in its normal operating state. No service actions are required. • Fast blink – System is running in standby mode and can be quickly returned to full function. • Slow blink – A normal but transitory activity is taking place. Slow blinking might indicate that system diagnostics are running or that the system is booting.
4	System Power button		The recessed Power button toggles the system on or off. • Press once to turn the system on. • Press once to shut the system down in a normal manner. • Press and hold for 4 seconds to perform an emergency shutdown.

TABLE: Front Panel System Controls and LEDs *(Continued)*

No.	LED	Icon	Description
5	System Overtemp LED (amber)		Provides the following operational temperature indications: • Off – Indicates a steady state, no service action is required. • Steady on – Indicates that a temperature failure event has been acknowledged and a service action is required.
6	Rear Fan Module Fault LED (amber)	REAR FAN	Provides the following operational fan module indications: • Off – Indicates a steady state, no service action is required. • Steady on – Indicates that a fan module failure event has been acknowledged and a service action is required on at least one of the fan modules.
7	Rear Express Module Fault LED (amber)	REAR EM	Provides the following operational express module indications: • Off – Indicates a steady state, no service action is required. • Steady on – Indicates that a failure event has been acknowledged and a service action is required on at least one of the express modules.

Rear I/O Module LEDs

The rear I/O module has several LEDs, some of which give system status information, while others provide link information on the NET and QSFP ports. These LEDs are shown in the following figure and described in the table that follows the figure.

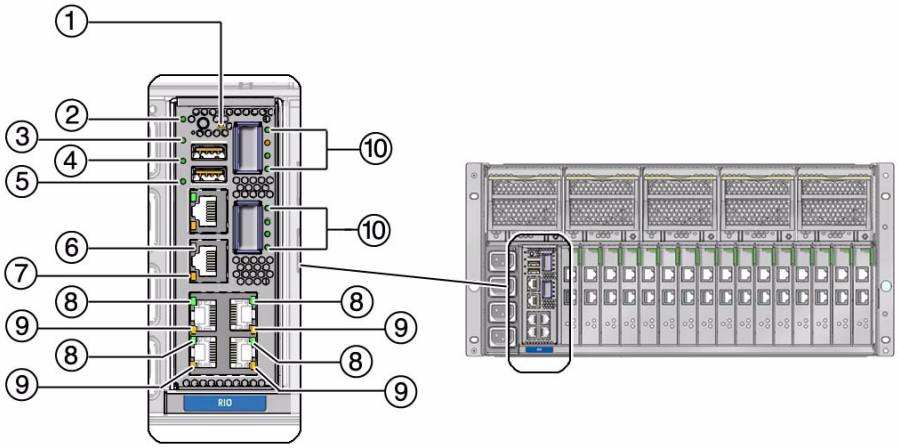

TABLE: Rear Panel Controls and LEDs

No.	LED	Icon	Description
1	System Locator LED and button (white)		The Locator LED can be turned on to identify a particular system. When on, it blinks rapidly. There are two methods for turning a Locator LED on: • Issuing the ILOM command `set /SYS/LOCATE value=Fast_Blink` • Pressing the Locator button
2	System Service Required LED (amber)		Indicates that service is required. POST and ILOM are two diagnostic tools that can detect a fault or failure resulting in this indication. The ILOM `show faulty` command provides details about any faults that cause this indicator to light. Under some fault conditions, individual component fault LEDs are turned on in addition to the Service Required LED.
3	System Power OK LED (green)	OK	Indicates the following conditions: • Off – System is not running in its normal state. System power might be off. The service processor might be running. • Steady on – System is powered on and is running in its normal operating state. No service actions are required. • Fast blink – System is running in standby mode and can be quickly returned to full function. • Slow blink – A normal but transitory activity is taking place. Slow blinking might indicate that system diagnostics are running or that the system is booting.
4	Service Processor LED	SP	Indicates the following conditions: • Off – Indicates the AC power might have been connected to the power supplies. • Steady on, green – Service processor is running in its normal operating state. No service actions are required. • Blink, green – Service processor is initializing the ILOM firmware. • Steady on, amber – A service processor error has occurred and service is required.

TABLE: Rear Panel Controls and LEDs *(Continued)*

No.	LED	Icon	Description
5	System Overtemp LED (amber)		Provides the following operational temperature indications: • Off – Indicates a steady state, no service action is required. • Steady on – Indicates that a temperature failure event has been acknowledged and a service action is required.
6	Net Management Link and Activity (green)		Indicates the following conditions: • On or blinking – A link is established. • Off – No link is established.
7	Net Management Speed (green)		Indicates the following conditions: • On or blinking – The link is operating as a 100-Mbps connection. • Off – The link is operating as a 10-Mbps connection.
8	NET Link and Activity (green)		Indicates the following conditions: • Blinking – A link is established. • Off – No link is established.
9	NET Speed (amber/green)		Indicates the following conditions: • Green on – The link is operating as a Gigabit connection (1000 Mbps). • Amber on – The link is operating as a 100-Mbps connection. • Off – The link is operating as a 10-Mbps connection or there is no link.
10	QSFP Link and Activity (green)		Indicates the following conditions: • Blinking – A link is established. • Off – No link is established.

Related Information

- "Processor Module LEDs" on page 76
- "Hard Drive LEDs" on page 111
- "Power Supply and AC Power Connector LEDs" on page 122
- "Fan Module LED" on page 149
- "Main Module Motherboard LEDs" on page 198

Managing Faults (ILOM)

These topics explain how to use ILOM, the service processor firmware, to diagnose faults and verify successful repairs.

Related Information

ILOM Troubleshooting Overview

The ILOM firmware enables you to remotely run diagnostics, such as POST, that would otherwise require physical proximity to the server's serial port. You can also configure ILOM to send email alerts of hardware failures, hardware warnings, and other events related to the server or to ILOM.

The service processor runs independently of the server, using the server's standby power. Therefore, ILOM firmware and software continue to function when the server OS goes offline or when the server is powered off.

Error conditions detected by ILOM, POST, and the Oracle Solaris PSH technology are forwarded to ILOM for fault handling.

FIGURE: Fault Reporting Through the ILOM Fault Manager

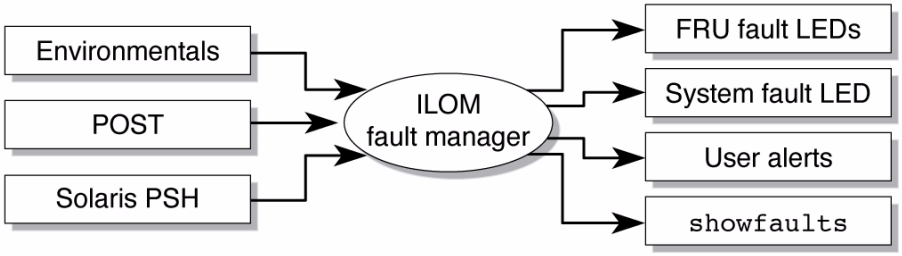

The ILOM fault manager evaluates error messages it receives to determine whether the condition being reported should be classified as an alert or a fault.

- **Alerts** – When the fault manager determines that an error condition being reported does not indicate a faulty FRU, it classifies the error as an alert.

  Alert conditions are often caused by environmental conditions, such as computer room temperature, which may improve over time. They may also be caused by a configuration error, such as the wrong DIMM type being installed.

  If the conditions responsible for the alert go away, the fault manager will detect the change and will stop logging alerts for that condition.

- **Faults** – When the fault manager determines that a particular FRU's has an error condition that is permanent, that error is classified as a fault. This causes the Service Required LEDs to be turned on, the FRUID PROMs updated, and a fault message logged. If the FRU has status LEDs, the Service Required LED for that FRU will also be turned on.

  A FRU identified as having a *fault* condition must be replaced.

The service processor can automatically detect when a FRU has been replaced. In many cases, it does this even if the FRU is removed while the system is not running (for example, if the system power cables are unplugged during service procedures). This function enables ILOM to sense that a fault, diagnosed to a specific FRU, has been repaired.

Note – ILOM does not automatically detect hard drive replacement.

The Oracle Solaris PSH technology does not monitor hard drives for faults. As a result, the service processor does not recognize hard drive faults and will not light the fault LEDs on either the chassis or the hard drive itself. Use the Oracle Solaris message files to view hard drive faults.

For general information about ILOM, see the *Oracle Integrated Lights Out Manager (ILOM) 3.0 Concepts Guide*.

For detailed information about ILOM features that are specific to this server, see the *SPARC T3 Series Servers Administration Guide*.

Related Information

- "Access the Service Processor (ILOM)" on page 24
- "Display FRU Information (show Command)" on page 26
- "Check for Faults (show faulty Command)" on page 27
- "Check for Faults (fmadm faulty Command)" on page 28
- "Clear Faults (clear_fault_action Property)" on page 29

▼ Access the Service Processor (ILOM)

There are two approaches to interacting with the service processor:

- ILOM shell (default) – The ILOM shell provides access to ILOM's features and functions through a command-line interface.
- ILOM browser interface – The ILOM browser interface supports the same set of features and functions as the shell, but through windows on a browser interface.

Note – Unless indicated otherwise, all examples of interaction with the service processor are depicted with ILOM shell commands.

Note – The CLI includes a feature that enables you to access Oracle Solaris Fault Manage commands, such as `fmadm`, `fmdump`, and `fmstat`, from within the Oracle ILOM shell. This feature is referred to as the Oracle ILOM `faultmgmt` shell. For more information about the Oracle Solaris Fault Manager commands, see the *SPARC T3 Series Servers Administration Guide* and the Oracle Solaris documentation.

You can log into multiple service processor accounts simultaneously and have separate ILOM shell commands executing concurrently under each account.

1. **Establish connectivity to the service processor, using one of the following methods:**
   - **SER MGT** – Connect a terminal device (such as an ASCII terminal or laptop with terminal emulation) to the serial management port.

     Set up your terminal device for 9600 baud, 8 bit, no parity, 1 stop bit and no handshaking, and use a null-modem configuration (transmit and receive signals crossed over to enable DTE-to-DTE communication). The crossover adapters supplied with the server provide a null-modem configuration.

- **NET MGT** – Connect this port to an Ethernet network. This port requires an IP address. By default, it is configured for DHCP, or you can assign an IP address.

2. **Decide which interface to use:**
   - **ILOM CLI** – The default ILOM UI and most of the commands and examples in this service manual use this interface. The default login account is `root` with a password of `changeme`.
   - **ILOM web interface** – Can be used when you access the service processor through the NET MGT port and have a browser. Refer to the ILOM 3.0 documentation for details. This interface is not referenced in this service manual.

3. **Log in to ILOM.**

   The default ILOM login account is `root` with a default password `changeme`.

   Example of logging in to the ILOM CLI:

```
ssh root@xxx.xxx.xxx.xxx
Password:
Waiting for daemons to initialize...
Daemons ready
Oracle (R) Integrated Lights Out Manager
Version 3.0.12.1 r57146
Copyright (c) 2010, Oracle and/or its affiliates, Inc. All rights reserved.
Warning: The system appears to be in manufacturing test mode.
Warning: password is set to factory default.
->
```

   The ILOM `->` prompt indicates that you are accessing the service processor with the ILOM CLI.

4. **Perform ILOM commands that provide the diagnostic information you need.**

   The following ILOM commands are commonly used for fault management:
   - `show` **command** – Displays information about individual FRUs.

     See "Display FRU Information (show Command)" on page 26.
   - `show faulty` **command** – Displays environmental, POST-detected, and PSH-detected faults.

     See "Check for Faults (show faulty Command)" on page 27.
   - `clear_fault_action` **property of the** `set` **command** – Manually clears PSH-detected faults.

     See "Clear Faults (clear_fault_action Property)" on page 29.

Note – You can use `fmadm faulty` in the faultmgmt shell as an alternative to `show faulty`. See "Check for Faults (fmadm faulty Command)" on page 28.

Related Information

- "ILOM Troubleshooting Overview" on page 22
- "Display FRU Information (show Command)" on page 26
- "Check for Faults (show faulty Command)" on page 27
- "Check for Faults (fmadm faulty Command)" on page 28
- "Clear Faults (clear_fault_action Property)" on page 29

▼ Display FRU Information (`show` Command)

Use the ILOM `show` command to display information about individual FRUs.

- **At the `->` prompt, type the `show` command.**

  In the following example, the `show` command displays information about a DIMM.

```
-> show /SYS/PM0/CMP0/BOB0/CH0/D0

/SYS/PM0/CMP0/BOB0/CH0/D0
   Targets:
       PRSNT
       T_AMB
       SERVICE

   Properties:
       Type = DIMM
       ipmi_name = BOB0/CH0/D0
       component_state = Enabled
       fru_name = 2048MB DDR3 SDRAM
       fru_description = DDR3 DIMM 2048 Mbytes
       fru_manufacturer = Samsung
       fru_version = 0
       fru_part_number = M393B5673FH0-CH9
       fru_serial_number = 80CE01100506036C9D
       fault_state = OK
       clear_fault_action = (none)

Commands:
```

```
cd
set
show
```

Related Information

- "Diagnostics Process" on page 12
- "Clear Faults (clear_fault_action Property)" on page 29

▼ Check for Faults (`show faulty` Command)

Use the `show faulty` command to display information about faults and alerts diagnosed by the system.

See "Fault Managment Command Examples" on page 30 for examples of the kind of information the command displays for different types of faults.

- **At the `->` prompt, enter the `show faulty` command.**

```
-> show faulty
Target                | Property                | Value
----------------------+-------------------------+-------------------------------
/SP/faultmgmt/0       | fru                     | /SYS/PS0
/SP/faultmgmt/0/      | class                   | fault.chassis.power.volt-fail
faults/0              |                         |
/SP/faultmgmt/0/      | sunw-msg-id             | SPT-8000-LC
faults/0              |                         |
/SP/faultmgmt/0/      | uuid                | 59654226-50d3-cdc6-9f09-e591f39792ca
faults/0              |                         |
/SP/faultmgmt/0/      | timestamp               | 2010-08-11/14:54:23
faults/0              |                         |
/SP/faultmgmt/0/      | fru_part_number         | 3002235
faults/0              |                         |
/SP/faultmgmt/0/      | fru_serial_number       | 003136
faults/0              |                         |
/SP/faultmgmt/0/      | product_serial_number   | BDL1024FDA
faults/0              |                         |
/SP/faultmgmt/0/      | chassis_serial_number   | BDL1024FDA
faults/0              |                         |
/SP/faultmgmt/0/      | detector                | /SYS/PS0/VOLT_FAULT
faults/0              |                         |
```

Related Information

- "Diagnostics Process" on page 12
- "Clear Faults (clear_fault_action Property)" on page 29

▼ Check for Faults (`fmadm faulty` Command)

The following is an example of the `fmadm faulty` command reporting on the same power supply fault as shown in the `show faulty` example. Note that the two examples show the same UUID value.

The `fmadm faulty` command was invoked from within the ILOM `faultmgmt` shell.

Note – The characters "SPT" at the beginning of the message ID indicate that the fault was detected by Oracle ILOM.

---

1. **At the `->` prompt, access the faultmgmt shell.**

```
-> start /SP/faultmgmt/shell
Are you sure you want to start /SP/faultmgmt/shell (y/n)? y
```

2. **At the `faultmgmtsp>` prompt, enter the `fmadm faulty` command.**

```
faultmgmtsp> fmadm faulty
------------------- ------------------------------------ ------------ -------
Time                UUID                                 msgid        Severity
------------------- ------------------------------------ ------------ -------
2010-08-11/14:54:23 59654226-50d3-cdc6-9f09-e591f39792ca SPT-8000-LC  Critical

Fault class : fault.chassis.power.volt-fail

Description : A Power Supply voltage level has exceeded acceptible limits.

Response    : The service required LED on the chassis and on the affected
              Power Supply may be illuminated.

Impact      : Server will be powered down when there are insufficient
              operational power supplies

Action      : The administrator should review the ILOM event log for
              additional information pertaining to this diagnosis.  Please
              refer to the Details section of the Knowledge Article for
              additional information.

faultmgmtsp> exit
```

Related Information

- "Diagnostics Process" on page 12
- "Check for Faults (show faulty Command)" on page 27

■ "Clear Faults (clear_fault_action Property)" on page 29

▼ Clear Faults (`clear_fault_action` Property)

Use the `clear_fault_action` property of a FRU with the `set` command to manually clear ILOM-detected faults from the service processor.

If Oracle ILOM detects the FRU replacement, it will automatically clear the fault so that manual clearing of the fault is not necessary. For PSH diagnosed faults, if the replacement of the FRU is detected by the system or the fault is manually cleared on the host, the fault will also be cleared from the service processor. In such cases, manual fault clearing will typically not be required.

Note – For PSH-detected faults, this procedure clears the fault from the service processor but not from the host. If the fault persists in the host, clear it manually as described in "Clear PSH-Detected Faults" on page 41.

- **At the `->` prompt, use the `set` command with the `clear_fault_action=True` property.**

  This example begins with an excerpt from the `fmadm faulty` command showing power supply 0 with a voltage failure. After the fault condition is corrected (a new power supply has been installed), the fault state is cleared manually.

Note – In this example, the characters "SPT" at the beginning of the message ID indicate that the fault was detected by Oracle ILOM.

```
[...]

faultmgmtsp> fmadm faulty
------------------- ------------------------------------ -------------- -------
Time                UUID                                 msgid          Severity
------------------- ------------------------------------ -------------- -------
2010-08-27/19:46:26 edc898a3-c875-6b86-851a-91a4ed8ad58e SPT-8000-MJ   Critical
Fault class : fault.chassis.power.fail

FRU         : /SYS/PS0
             (Part Number: 300-2159-05)
             (Serial Number: 1908BAO-1020A90156)

Description : A Power Supply has failed and is not providing power to the
             server.
[...]
```

```
-> set /SYS/PS0 clear_fault_action=true
Are you sure you want to clear /SYS/PS0 (y/n)? y

-> show

 /SYS/PS0
    Targets:
        VINOK
        PWROK
        CUR_FAULT
        VOLT_FAULT
        FAN_FAULT
        TEMP_FAULT
        V_IN
        I_IN
        V_OUT
        I_OUT
        INPUT_POWER
        OUTPUT_POWER
    Properties:
        type = Power Supply
        ipmi_name = PS0
        fru_name = /SYS/PS0
        fru_description = Powersupply
        fru_manufacturer = Delta Electronics
        fru_version = 03
        fru_part_number = 3002235
        fru_serial_number = 003136
        fault_state = OK
        clear_fault_action = (none)

    Commands:
        cd
        set
        show
```

Related Information

- "Diagnostics Process" on page 12

Fault Managment Command Examples

When no faults have been detected, the show fault output looks like this:

```
-> show faulty
Target              | Property                | Value
--------------------+-------------------------+--------------------
```

```
-----------------------------------------------------------------
```

Other examples are shown in the following sections.

`show faulty` Example of a Power Supply Fault

The following is an example of the `show faulty` command reporting a power supply fault.

Note – The characters "SPT" at the beginning of the message ID indicate that the fault was detected by Oracle ILOM.

```
-> show faulty
Target                | Property                | Value
----------------------+-------------------------+-------------------------------
/SP/faultmgmt/0       | fru                     | /SYS/PS0
/SP/faultmgmt/0/      | class                   | fault.chassis.power.volt-fail
faults/0              |                         |
/SP/faultmgmt/0/      | sunw-msg-id             | SPT-8000-LC
faults/0              |                         |
/SP/faultmgmt/0/     | uuid                 | 59654226-50d3-cdc6-9f09-e591f39792ca
faults/0              |                         |
/SP/faultmgmt/0/      | timestamp               | 2010-08-11/14:54:23
faults/0              |                         |
/SP/faultmgmt/0/      | fru_part_number         | 3002235
faults/0              |                         |
/SP/faultmgmt/0/      | fru_serial_number       | 003136
faults/0              |                         |
/SP/faultmgmt/0/      | product_serial_number   | BDL1024FDA
faults/0              |                         |
/SP/faultmgmt/0/      | chassis_serial_number   | BDL1024FDA
faults/0              |                         |
/SP/faultmgmt/0/      | detector                | /SYS/PS0/VOLT_FAULT
faults/0              |                         |
```

`fmadm faulty` Example of a Power Supply Fault

The following is an example of the `fmadm faulty` command reporting on the same power supply fault as shown in the `show faulty` example. Note that the two examples show the same UUID value.

The `fmadm faulty` command was invoked from within the ILOM `faultmgmt` shell.

Note – The characters "SPT" at the beginning of the message ID indicate that the fault was detected by Oracle ILOM.

```
-> start /SP/faultmgmt/shell
Are you sure you want to start /SP/faultmgmt/shell (y/n)? y

faultmgmtsp> fmadm faulty
------------------- ------------------------------------ -------------- -------
Time                UUID                                 msgid          Severity
------------------- ------------------------------------ -------------- -------
2010-08-27/19:46:26 edc898a3-c875-6b86-851a-91a4ed8ad58e SPT-8000-MJ   Critical
Fault class : fault.chassis.power.fail

FRU         : /SYS/PS3
             (Part Number: 300-2159-05)
             (Serial Number: 1908BAO-1020A90156)

Description : A Power Supply has failed and is not providing power to the
             server.

Response    : The service required LED on the chassis and on the affected
              Power Supply may be illuminated.

Impact      : Server will be powered down when there are insufficient
              operational power supplies

Action      : The administrator should review the ILOM event log for
              additional information pertaining to this diagnosis.  Please
              refer to the Details section of the Knowledge Article for
              additional information.

faultmgmtsp> exit
```

`show faulty` Example of a POST-Detected Fault

The following is an example of the `show faulty` command displaying a fault that was detected by POST. These kinds of faults are identified by the message `Forced fail` *reason*, where *reason* is the name of the power-on routine that detected the fault.

```
-> show faulty
Target              | Property               | Value
--------------------+------------------------+-------------------------------
/SP/faultmgmt/0     | fru                    | /SYS/PM0/CMP0/B0B0/CH0/D0
```

```
/SP/faultmgmt/0      | timestamp               | Oct 12 16:40:56
/SP/faultmgmt/0/     | timestamp               | Oct 12 16:40:56
faults/0             |                         |
/SP/faultmgmt/0/     | sp_detected_fault       | /SYS/PM0/CMP0/B0B0/CH0/D0
faults/0             |                         | Forced fail(POST)
```

`show faulty` Example of a PSH-Detected Fault

The following is an example of the `show faulty` command displaying a fault that was detected by the PSH technology. These kinds of faults are identified by the absence of the characters "SPT" at the beginning of the message ID.

```
-> show faulty
Target               | Property                | Value
---------------------+-------------------------+--------------------------------
/SP/faultmgmt/0      | fru                     | /SYS/PM0
/SP/faultmgmt/0/     | class                   | fault.cpu.generic-sparc.strand
 faults/0            |                         |
/SP/faultmgmt/0/     | sunw-msg-id             | SUN4V-8002-6E
faults/0             |                         |
/SP/faultmgmt/0/     | uuid                    | 21a8b59e-89ff-692a-c4bc-f4c5cccc
faults/0             |                         | 7a8a
/SP/faultmgmt/0/     | timestamp               | 2010-08-13/15:48:33
faults/0             |                         |
/SP/faultmgmt/0/     | chassis_serial_number   | BDL1024FDA
faults/0             |                         |
/SP/faultmgmt/0/     | product_serial_number   | BDL1024FDA
faults/0             |                         |
/SP/faultmgmt/0/     | fru_serial_number       | 1005LCB-1018B2009T
faults/0             |                         |
/SP/faultmgmt/0/     | fru_part_number         | 541-3857-07
faults/0             |                         |
/SP/faultmgmt/0/     | mod-version             | 1.16
faults/0             |                         |
/SP/faultmgmt/0/     | mod-name                | eft
faults/0             |                         |
/SP/faultmgmt/0/     | fault_diagnosis         | /HOST
faults/0             |                         |
/SP/faultmgmt/0/     | severity                | Major
faults/0             |                         |
```

Related Information

- "Managing Components (ASR)" on page 52

Service-Related ILOM Commands

These are the ILOM shell commands most frequently used when performing service-related tasks.

ILOM Command	Description
`help` *[command]*	Displays a list of all available commands with syntax and descriptions. Specifying a command name as an option displays help for that command.
`set /HOST send_break_action=break`	Takes the host server from the OS to either `kmdb` or OpenBoot PROM (equivalent to a Stop-A), depending on the mode Oracle Solaris software was booted.
`set /SYS/`*component* `clear_fault_action=true`	Manually clears host-detected faults. The *UUID* is the unique fault ID of the fault to be cleared.
`start /HOST/console`	Connects you to the host system.
`show /HOST/console/history`	Displays the contents of the system's console buffer.
`set /HOST/bootmode` *property=value* [where *property* is `state`, `config`, or `script`]	Controls the host server OpenBoot PROM firmware method of booting.
`stop /SYS; start /SYS`	Performs a `poweroff` followed by `poweron`.
`stop /SYS`	Powers off the host server.
`start /SYS`	Powers on the host server.
`reset /SYS`	Generates a hardware reset on the host server.
`reset /SP`	Reboots the service processor.
`set /SYS keyswitch_state=`*value* `normal | standby | diag | locked`	Sets the virtual keyswitch.
`set /SYS/LOCATE value=`*value* [`Fast_blink` | `Off`]	Turns the Locator LED on the server on or off.
`show faulty`	Displays current system faults. See "Check for Faults (show faulty Command)" on page 27.
`show /SYS keyswitch_state`	Displays the status of the virtual keyswitch.

ILOM Command	Description
`show /SYS/LOCATE`	Displays the current state of the Locator LED as either on or off.
`show /SP/logs/event/list`	Displays the history of all events logged in the service processor event buffers (in RAM or the persistent buffers).
`show /HOST`	Displays information about the operating state of the host system, the system serial number, and whether the hardware is providing service.

Related Information

- "Managing Components (ASR)" on page 52

Interpreting Log Files and System Messages

With the Oracle Solaris OS running on the server, you have the full complement of Oracle Solaris OS files and commands available for collecting information and for troubleshooting.

If POST or the Oracle Solaris PSH features do not indicate the source of a fault, check the message buffer and log files for notifications for faults. Hard disk drive faults are usually captured by the Oracle Solaris message files.

Use the `dmesg` command to view the most recent system message. To view the system messages log file, view the contents of the `/var/adm/messages` file.

- "Check the Message Buffer" on page 36
- "View System Message Log Files" on page 36

Related Information

- "Running POST" on page 42
- "Using Oracle Solaris Predictive Self-Healing" on page 37

▼ Check the Message Buffer

The `dmesg` command checks the system buffer for recent diagnostic messages and displays them.

1. **Log in as superuser.**
2. **Type:**

```
# dmesg
```

Related Information

- "View System Message Log Files" on page 36

▼ View System Message Log Files

The error logging daemon, `syslogd`, automatically records various system warnings, errors, and faults in message files. These messages can alert you to system problems such as a device that is about to fail.

The `/var/adm` directory contains several message files. The most recent messages are in the `/var/adm/messages` file. After a period of time (usually every week), a new `messages` file is automatically created. The original contents of the `messages` file are rotated to a file named `messages.1`. Over a period of time, the messages are further rotated to `messages.2` and `messages.3`, and then deleted.

1. **Log in as superuser.**
2. **Type:**

```
# more /var/adm/messages
```

3. **If you want to view all logged messages, type:**

```
# more /var/adm/messages*
```

Related Information

- "Check the Message Buffer" on page 36

Using Oracle Solaris Predictive Self-Healing

The following topics describe the Oracle Solaris Predictive Self-Healing feature:

PSH Overview

The Oracle Solaris Predictive Self-Healing technology enables the server to diagnose problems while the Oracle Solaris OS is running and mitigate many problems before they negatively affect operations.

The Oracle Solaris OS uses the Fault Manager daemon, `fmd`(1M), which starts at boot time and runs in the background to monitor the system. If a component generates an error, the daemon correlates the error with data from previous errors and other relevant information to diagnose the problem. Once diagnosed, the Fault Manager daemon assigns a UUID to the error. This value distinguishes this error across any set of systems.

When possible, the Fault Manager daemon initiates steps to self-heal the failed component and take the component offline. The daemon also logs the fault to the `syslogd` daemon and provides a fault notification with a MSGID. You can use the message ID to get additional information about the problem from the knowledge article database.

The PSH technology covers the following server components:

- CPU
- Memory
- I/O subsystem

The PSH console message provides the following information about each detected fault:

- Type
- Severity
- Description

- Automated response
- Impact
- Suggested action for system administrator

If the PSH facility detects a faulty component, use the `fmadm faulty` command to display information about the fault. Alternatively, you can use the Oracle ILOM command show faulty for the same purpose.

Related Information

- "PSH-Detected Fault Example" on page 38
- "Check for PSH-Detected Faults" on page 39
- "Clear PSH-Detected Faults" on page 41

PSH-Detected Fault Example

When a PSH fault is detected, an Oracle Solaris console message similar to the following example is displayed.

```
SUNW-MSG-ID: SUN4V-8000-DX, TYPE: Fault, VER: 1, SEVERITY: Minor
EVENT-TIME: Wed Jun 17 10:09:46 EDT 2009
PLATFORM: SUNW,system_name, CSN: -, HOSTNAME: server48-37
SOURCE: cpumem-diagnosis, REV: 1.5
EVENT-ID: f92e9fbe-735e-c218-cf87-9e1720a28004
DESC: The number of errors associated with this memory module has
exceeded acceptable levels.  Refer to
http://sun.com/msg/SUN4V-8000-DX for more information.
AUTO-RESPONSE: Pages of memory associated with this memory module
are being removed from service as errors are reported.
IMPACT: Total system memory capacity will be reduced
as pages are retired.
REC-ACTION: Schedule a repair procedure to replace the affected
memory module.  Use fmdump -v -u <EVENT_ID> to identify the module.
```

Note – The Service Required LED is also turned on for PSH-diagnosed faults.

Related Information

- "PSH Overview" on page 37
- "Check for PSH-Detected Faults" on page 39
- "Clear PSH-Detected Faults" on page 41

▼ Check for PSH-Detected Faults

The `fmadm faulty` command displays the list of faults detected by the Oracle Solaris PSH facility. You can run this command either from the host or through the Oracle ILOM `fmadm` shell.

As an alternative, you could display fault information by running the Oracle ILOM command `show`.

1. Check the event log using `fmadm faulty`:

```
-> start /SP/faultmgmt/shell
Are you sure you want to start /SP/faultmgmt/shell (y/n)? y

faultmgmtsp> fmadm faulty
------------------- ------------------------------------ -------------- -------
Time                UUID                                 msgid          Severity
------------------- ------------------------------------ -------------- -------
2010-08-27/19:46:26 edc898a3-c875-6b86-851a-91a4ed8ad58e SPT-8000-MJ   Critical
Fault class : fault.chassis.power.fail

FRU         : /SYS/PS3
             (Part Number: 300-2159-05)
             (Serial Number: 1908BAO-1020A90156)

Description : A Power Supply has failed and is not providing power to the
             server.

Response    : The service required LED on the chassis and on the affected
              Power Supply may be illuminated.

Impact      : Server will be powered down when there are insufficient
              operational power supplies

Action      : The administrator should review the ILOM event log for
              additional information pertaining to this diagnosis.  Please
              refer to the Details section of the Knowledge Article for
              additional information.
```

In this example, a fault is displayed, indicating the following details:

- Date and time of the fault (`2010-08-27/19:46:26`)
- Universal Unique Identifier (UUID). The UUID is unique for every fault (`edc898a3-c875-6b86-851a-91a4ed8ad58e`)
- Message identifier, which can be used to obtain additional fault information (`SPT-8000-MJ`)

- Faulted FRU. The information provided in the example includes the part number of the FRU (`Part Number: 300-2159-05`) and the serial number of the FRU (`Serial Number: 1908BAO-1020A90156`)). The FRU field provides the name of the FRU (/SYS/PS3 for power supply 3 in this example).

2. **Use the message ID to obtain more information about this type of fault:**

   a. **Obtain the message ID from console output or from the ILOM `show faulty` command.**

   b. **Enter the message ID at the end of the Predictive Self-Healing Knowledge Article web site, `http://www.sun.com/msg`. In the current example, enter this in the browser address window:**

      `http://www.sun.com/msg/SPT-8000-MJ`

      The following example shows the message ID `SPT-8000-MJ` and provides information for corrective action.

```
Power Supply general failure

Type
    Fault
Severity
    Critical
Description
     A Power Supply has failed and is not providing power to the server.
Automated Response
     The service required LED on the chassis and on the affected Power
     Supply may be illuminated.
Impact
     Server will be powered down when there are insufficient operational
power supplies.
Suggested Action for System Administrator
     The administrator should review the ILOM event log for additional
     information pertaining to this diagnosis.  Please refer to the Details
     section of the Knowledge Article for additional information.
Details
     The administrator should review the ILOM event log for additional
     information pertaining to this diagnosis.  Please refer to the Details
     section of the Knowledge Article for additional information.
```

3. **Follow the suggested actions to repair the fault.**

Related Information

- "Clear PSH-Detected Faults" on page 41
- "PSH-Detected Fault Example" on page 38

▼ Clear PSH-Detected Faults

When the Oracle Solaris Predictive Self-Healing facility detects faults, the faults are logged and displayed on the console. In most cases, after the fault is repaired, the corrected state is detected by the system and the fault condition is repaired automatically. However, this repair should be verified. In cases where the fault condition is not automatically cleared, the fault must be cleared manually.

1. **After replacing a faulty FRU, power on the server.**
2. **At the host prompt, use the `fmadm faulty` command to determine whether the replaced FRU still shows a faulty state.**

```
# fmadm faulty
TIME            EVENT-ID                              MSG-ID         SEVERITY
Aug 13 11:48:33 21a8b59e-89ff-692a-c4bc-f4c5cccca8c8  SUN4V-8002-6E  Major


Platform    : sun4v     Chassis_id  :
Product_sn  :

Fault class : fault.cpu.generic-sparc.strand
Affects     : cpu:///cpuid=21/serial=00000000000000000000
                  faulted and taken out of service
FRU         : "/SYS/PM0"
(hc://:product-id=sun4v:product-sn=BDL1024FDA:server-id=
s4v-t5160a-bur02:chassis-id=BDL1024FDA:serial=1005LCB-1019B100A2:part=
511127809:revision=05/chassis=0/motherboard=0)
                  faulty

Description : The number of correctable errors associated with this strand has
              exceeded acceptable levels.
              Refer to http://sun.com/msg/SUN4V-8002-6E for more information.

Response    : The fault manager will attempt to remove the affected strand
              from service.

Impact      : System performance may be affected.

Action      : Schedule a repair procedure to replace the affected resource, the
              identity of which can be determined using 'fmadm faulty'.
```

- If no fault is reported, you do not need to do anything else. Do not perform the subsequent steps.
- If a fault is reported, continue to Step 3.

3. **Clear the fault from all persistent fault records.**

   In some cases, even though the fault is cleared, some persistent fault information remains and results in erroneous fault messages at boot time. To ensure that these messages are not displayed, perform the following Oracle Solaris command:

```
# fmadm repair UUID
```

   For the UUID in the example shown in Step 2, enter this command:

```
# fmadm repair 21a8b59e-89ff-692a-c4bc-f4c5cccc
```

4. **Use the `clear_fault_action` property of the FRU to clear the fault.**

```
-> set /SYS/PM0 clear_fault_action=True
Are you sure you want to clear /SYS/PM0 (y/n)? y
set 'clear_fault_action' to 'true
```

Related Information

- "PSH Overview" on page 37
- "PSH-Detected Fault Example" on page 38

Running POST

These topics explain how to use POST as a diagnostic tool.

POST Overview

Power-on self-test is a group of PROM-based tests that run when the server is powered on or when it is reset. POST checks the basic integrity of the critical hardware components in the server (CMP, memory, and I/O subsystem).

You can also run POST as system-level hardware diagnostic tool. To do this, use the Oracle ILOM `set` command to set the parameter `keyswitch_state` to `diag`.

You can also set other Oracle ILOM properties to control various other aspects of POST operations. For example, you can specify the events that cause POST to run, the level of testing POST performs, and the amount of diagnostic information POST displays. These properties are listed and described in "ILOM Properties That Affect POST Behavior" on page 43.

If POST detects a faulty component, the component is disabled automatically. If the system is able to run without the disabled component, it will boot when POST completes its tests. For example, if POST detects a faulty processor core, the core will be disabled and, once POST completes its test sequence, the system will boot and run using the remaining cores.

Related Information

- "ILOM Properties That Affect POST Behavior" on page 43
- "Run POST With Maximum Testing" on page 47
- "Interpret POST Fault Messages" on page 48
- "Clear POST-Detected Faults" on page 49

ILOM Properties That Affect POST Behavior

The following table describes the ILOM properties that determine how POST performs its operations.

Note – The value of `keyswitch_state` must be `normal` when individual POST parameters are changed.

TABLE: ILOM Properties Used to Manage POST Operations

Parameter	Values	Description
`/SYS keyswitch_state`	`normal`	The system can power on and run POST (based on the other parameter settings). This parameter overrides all other commands.
	`diag`	The system runs POST based on predetermined settings.
	`standby`	The system cannot power on.
	`locked`	The system can power on and run POST, but no flash updates can be made.
`/HOST/diag mode`	`off`	POST does not run.
	`normal`	Runs POST according to `diag level` value.
	`service`	Runs POST with preset values for `diag level` and `diag verbosity`.
`/HOST/diag level`	`max`	If `diag mode` = `normal`, runs all the minimum tests plus extensive processor and memory tests.
	`min`	If `diag mode` = `normal`, runs minimum set of tests.
`/HOST/diag trigger`	`none`	Does not run POST on reset.
	`hw-change`	(Default) Runs POST following an AC power cycle and when the top cover is removed.
	`power-on-reset`	Only runs POST for the first power on.
	`error-reset`	(Default) Runs POST if fatal errors are detected.
	`all-resets`	Runs POST after any reset.
`/HOST/diag verbosity`	`normal`	POST output displays all test and informational messages.
	`min`	POST output displays functional tests with a banner and pinwheel.
	`max`	POST displays all test, informational, and some debugging messages.
	debug	
	`none`	No POST output is displayed.

The following flowchart is a graphic illustration of the same set of ILOM `set` command variables.

FIGURE: Flowchart of ILOM Properties Used to Manage POST Operations

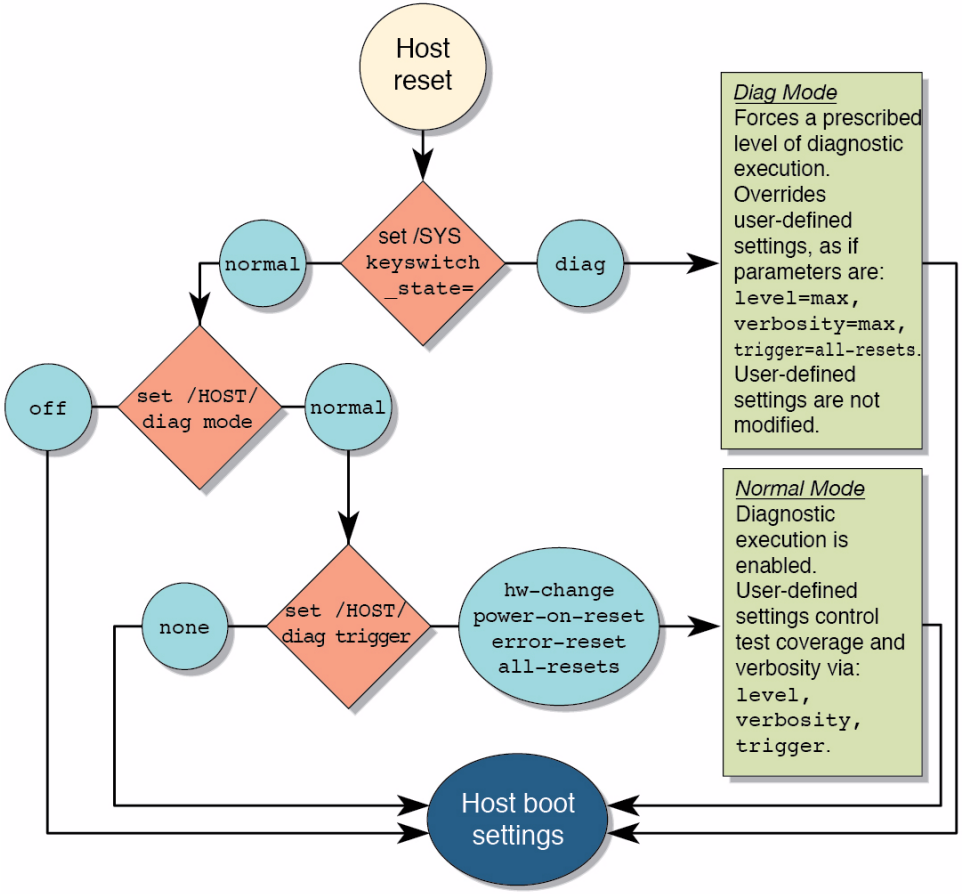

▼ Configure POST

1. **Access the ILOM -> prompt.**

   See "Access the Service Processor (ILOM)" on page 24.

2. **Set the virtual keyswitch to the value that corresponds to the POST configuration you want to run.**

   The following example sets the virtual keyswitch to normal, which will configure POST to run according to other parameter values.

```
-> set /SYS keyswitch_state=normal
Set 'keyswitch_state' to 'Normal'
```

   For possible values for the `keyswitch_state` parameter, see "ILOM Properties That Affect POST Behavior" on page 43.

3. **If the virtual keyswitch is set to `normal`, and you want to define the `mode`, `level`, `verbosity`, or `trigger`, set the respective parameters.**

   Syntax:

   `set /HOST/diag` *property=value*

   See "ILOM Properties That Affect POST Behavior" on page 43 for a list of parameters and values.

   Examples:

```
-> set /HOST/diag mode=normal
-> set /HOST/diag verbosity=max
```

4. **To see the current values for settings, use the `show` command.**

   Example:

```
-> show /HOST/diag

/HOST/diag
    Targets:

    Properties:
        level = min
        mode = normal
        trigger = power-on-reset error-reset
        verbosity = normal

    Commands:
        cd
        set
        show
->
```

Related Information

- "POST Overview" on page 43

▼ Run POST With Maximum Testing

This procedure describes how to configure the server to run the maximum level of POST.

1. **Access the ILOM -> prompt:**

   See "Access the Service Processor (ILOM)" on page 24.

2. **Set the virtual keyswitch to `diag` so that POST will run in service mode.**

```
-> set /SYS keyswitch_state=diag
Set 'keyswitch_state' to 'Diag'
```

3. **Reset the system so that POST runs.**

   There are several ways to initiate a reset. The following example shows a reset by issuing commands that will power cycle the host.

```
-> stop /SYS
Are you sure you want to stop /SYS (y/n)? y
Stopping /SYS
-> start /SYS
Are you sure you want to start /SYS (y/n)? y
Starting /SYS
```

Note – The server takes about one minute to power off. Use the `show /HOST` command to determine when the host has been powered off. The console will display `status=Powered Off`.

---

4. **Switch to the system console to view the POST output.**

```
-> start /HOST/console
```

5. **If you receive POST error messages, follow the guidelines provided in the topic** "Interpret POST Fault Messages" on page 48.

Related Information

- "POST Overview" on page 43
- "ILOM Properties That Affect POST Behavior" on page 43
- "Configure POST" on page 45
- "Interpret POST Fault Messages" on page 48
- "Clear POST-Detected Faults" on page 49

▼ Interpret POST Fault Messages

1. **Run POST.**

   See "Run POST With Maximum Testing" on page 47.

2. **View the output and watch for messages that look similar to the following syntax descriptions and example:**

   - POST error messages use the following syntax:

     n:c:s > `ERROR: TEST` = *failing-test*

     n:c:s > `H/W under test` = *FRU*

     n:c:s > `Repair Instructions: Replace items in order listed by H/W under test above`

     n:c:s > `MSG` = *test-error-message*

     n:*c:s* > `END_ERROR`

     In this syntax, *n* = *the node number*, *c* = the core number, *s* = the strand number.

   - Warning and informational messages use the following syntax:

     `INFO` or `WARNING`: *message*

3. **To obtain more information on faults, run the `show faulty` command.**

   See "Check for Faults (show faulty Command)" on page 27.

Related Information

- "Clear POST-Detected Faults" on page 49
- "POST Overview" on page 43
- "ILOM Properties That Affect POST Behavior" on page 43
- "Configure POST" on page 45
- "Run POST With Maximum Testing" on page 47

▼ Clear POST-Detected Faults

Use this procedure if you suspect that a fault was not automatically cleared. This procedure describes how to identify a POST-detected fault and, if necessary, manually clear the fault.

In most cases, when POST detects a faulty component, POST logs the fault and automatically takes the failed component out of operation by placing the component in the ASR blacklist (see "Managing Components (ASR)" on page 52).

Usually, when a faulty component is replaced, the replacement is detected when the service processor is reset or power cycled, and the fault is automatically cleared from the system.

1. **After replacing a faulty FRU, at the ILOM prompt, use the `show faulty` command to identify POST-detected faults.**

   POST-detected faults are distinguished from other kinds of faults by the text: `Forced fail`. No UUID number is reported. Example:

```
-> show faulty
Target                  | Property                | Value
-----------------------+-------------------------+-----------------------------
/SP/faultmgmt/0         | fru                     | /SYS/PM0/CMP0/BOB1/CH0/D0
/SP/faultmgmt/0         | timestamp               | Dec 21 16:40:56
/SP/faultmgmt/0/        | timestamp               | Dec 21 16:40:56
faults/0                |                         |
/SP/faultmgmt/0/        | sp_detected_fault       | /SYS/PM0/CMP0/BOB1/CH0/D0
faults/0                |                         | Forced fail(POST)
```

2. **Take one of the following actions based on the `show faulty` output:**
   - No fault is reported – The system cleared the fault and you do not need to manually clear the fault. Do not perform the subsequent steps.
   - Fault reported – Go to the next step in this procedure.

3. **Use the `component_state` property of the component to clear the fault and remove the component from the ASR blacklist.**

   Use the FRU name that was reported in the fault in Step 1. Example:

```
-> set /SYS/PM0/CMP0/BOB1/CH0/D0 component_state=Enabled
```

   The fault is cleared and should not show up when you run the `show faulty` command. Additionally, the System Fault (Service Required) LED is no longer lit.

4. **Reset the server.**

   You must reboot the server for the `component_state` property to take effect.

5. **At the ILOM prompt, use the `show faulty` command to verify that no faults are reported.**

   Example:

```
-> show faulty
Target               | Property                | Value
--------------------+------------------------+------------------
->
```

Related Information

- "POST Overview" on page 43
- "ILOM Properties That Affect POST Behavior" on page 43
- "Configure POST" on page 45
- "Run POST With Maximum Testing" on page 47

POST Output Reference

POST error messages use the following syntax:

```
n:c:s > ERROR: TEST = failing-test
n:c:s > H/W under test = FRU
n:c:s > Repair Instructions: Replace items in order listed by H/W
under test above
n:c:s > MSG = test-error-message
n:c:s > END_ERROR
```

In this syntax, *n* = the node number, *c* = the core number, *s* = the strand number.

Warning messages use the following syntax:

```
WARNING: message
```

Informational messages use the following syntax:

```
INFO: message
```

In the following example, POST reports an uncorrectable memory error affecting DIMM locations /SYS/PM0/CMP0/B0B0/CH0/D0 and /SYS/PM0/CMP0/B0B1/CH0/D0. The error was detected by POST running on node 0, core 7, strand 2.

```
2010-07-03 18:44:13.359 0:7:2>Decode of Disrupting Error Status Reg
(DESR HW Corrected)  bits 00300000.00000000
2010-07-03 18:44:13.517 0:7:2>        1    DESR_SOCSRE:     SOC
(non-local) sw_recoverable_error.
2010-07-03 18:44:13.638 0:7:2>        1    DESR_SOCHCCE:     SOC
(non-local) hw_corrected_and_cleared_error.
2010-07-03 18:44:13.773 0:7:2>
2010-07-03 18:44:13.836 0:7:2>Decode of NCU Error Status Reg bits
00000000.22000000
2010-07-03 18:44:13.958 0:7:2>        1    NESR_MCU1SRE:     MCU1 issued
a Software Recoverable Error Request
2010-07-03 18:44:14.095 0:7:2>        1    NESR_MCU1HCCE:     MCU1
issued a Hardware Corrected-and-Cleared Error Request
2010-07-03 18:44:14.248 0:7:2>
2010-07-03 18:44:14.296 0:7:2>Decode of Mem Error Status Reg Branch 1
bits 33044000.00000000
2010-07-03 18:44:14.427 0:7:2>        1      MEU 61     R/W1C Set to 1
on an UE if VEU = 1, or VEF = 1, or higher priority error in same cycle.
2010-07-03 18:44:14.614 0:7:2>        1      MEC 60     R/W1C Set to 1
on a CE if VEC = 1, or VEU = 1, or VEF = 1, or another error in same cycle.
2010-07-03 18:44:14.804 0:7:2>        1      VEU 57     R/W1C Set to 1
on an UE, if VEF = 0 and no fatal error is detected in same cycle.
2010-07-03 18:44:14.983 0:7:2>        1      VEC 56     R/W1C Set to 1
on a CE, if VEF = VEU = 0 and no fatal or UE is detected in same cycle.
2010-07-03 18:44:15.169 0:7:2>        1      DAU 50     R/W1C Set to 1
if the error was a DRAM access UE.
2010-07-03 18:44:15.304 0:7:2>        1      DAC 46     R/W1C Set to 1
if the error was a DRAM access CE.
2010-07-03 18:44:15.440 0:7:2>
2010-07-03 18:44:15.486 0:7:2>        DRAM Error Address Reg for Branch
1 = 00000034.8647d2e0
2010-07-03 18:44:15.614 0:7:2>            Physical Address is
00000005.d21bc0c0
2010-07-03 18:44:15.715 0:7:2>        DRAM Error Location Reg for Branch
```

```
1 = 00000000.00000800
2010-07-03 18:44:15.842 0:7:2>        DRAM Error Syndrome Reg for Branch
1 = dd1676ac.8c18c045
2010-07-03 18:44:15.967 0:7:2>        DRAM Error Retry Reg for Branch 1
= 00000000.00000004
2010-07-03 18:44:16.086 0:7:2>        DRAM Error RetrySyndrome 1 Reg for
Branch 1 = a8a5f81e.f6411b5a
2010-07-03 18:44:16.218 0:7:2>        DRAM Error Retry Syndrome 2 Reg
for Branch 1 = a8a5f81e.f6411b5a
2010-07-03 18:44:16.351 0:7:2>        DRAM Failover Location 0 for
Branch 1 = 00000000.00000000
2010-07-03 18:44:16.475 0:7:2>        DRAM Failover Location 1 for
Branch 1 = 00000000.00000000
2010-07-03 18:44:16.604 0:7:2>
2010-07-03 18:44:16.648 0:7:2>ERROR: POST terminated prematurely. Not
all system components tested.
2010-07-03 18:44:16.786 0:7:2>POST: Return to VBSC
2010-07-03 18:44:16.795 0:7:2>ERROR:
2010-07-03 18:44:16.839 0:7:2>    POST toplevel status has the following
failures:
2010-07-03 18:44:16.952 0:7:2>    Node 0 ------------------------------
2010-07-03 18:44:17.051 0:7:2>        /SYS/PM0/CMP0/BOB0/CH1/D0 (J1001)
2010-07-03 18:44:17.145 0:7:2>        /SYS/PM0/CMP0/BOB1/CH1/D0 (J3001)
2010-07-03 18:44:17.241 0:7:2>END_ERROR
```

Related Information

- "ILOM Properties That Affect POST Behavior" on page 43
- "Run POST With Maximum Testing" on page 47
- "Clear POST-Detected Faults" on page 49

Managing Components (ASR)

The following topics explain the role played by the Automatic System Recovery feature and how to manage the components it controls.

ASR Overview

The ASR feature enables the server to automatically configure failed components out of operation until they can be replaced. In the server, the following components are managed by the ASR feature:

- CPU strands
- Memory DIMMs
- I/O subsystem

The database that contains the list of disabled components is referred to as the ASR blacklist (`asr-db`).

In most cases, POST automatically disables a faulty component. After the cause of the fault is repaired (FRU replacement, loose connector reseated, and so on), you might need to remove the component from the ASR blacklist.

The following ASR commands enable you to view and add or remove components (`asrkeys`) from the ASR blacklist. You run these commands from the ILOM `->` prompt.

Command	Description
`show components`	Displays system components and their current state.
`set` *asrkey* `component_state=Enabled`	Removes a component from the `asr-db` blacklist, where *asrkey* is the component to enable.
`set` *asrkey* `component_state=Disabled`	Adds a component to the `asr-db` blacklist, where *asrkey* is the component to disable.

Note – The `asrkeys` vary from system to system, depending on how many cores and memory are present. Use the `show components` command to see the `asrkeys` on a given system.

After you enable or disable a component, you must reset (or power cycle) the system for the component's change of state to take effect.

Related Information

- "Display System Components" on page 54
- "Disable System Components" on page 54
- "Enable System Components" on page 55

▼ Display System Components

The `show components` command displays the system components (`asrkeys`) and reports their status.

- **At the -> prompt, type** `show components`**.**

  In the following example, PCI-EM3 is shown as disabled.

```
-> show components
Target                | Property                | Value
----------------------+-------------------------+-------------------------------
/SYS/MB/REM0/         | component_state         | Enabled
SASHBA0               |                         |
/SYS/MB/REM1/         | component_state         | Enabled
SASHBA1               |                         |
/SYS/MB/VIDEO         | component_state         | Enabled
/SYS/MB/PCI-          | component_state         | Enabled
SWITCH0               |                         |
<...>
/SYS/PCI-EM0          | component_state         | Enabled
/SYS/PCI-EM1          | component_state         | Enabled
/SYS/PCI-EM2          | component_state         | Enabled
/SYS/PCI-EM3          | component_state         | Disabled
/SYS/PCI-EM4          | component_state         | Enabled
/SYS/PCI-EM5          | component_state         | Enabled
/SYS/PCI-EM6          | component_state         | Enabled
<...>
```

Related Information

- "View System Message Log Files" on page 36
- "Disable System Components" on page 54
- "Enable System Components" on page 55

▼ Disable System Components

You disable a component by setting its `component_state` property to `Disabled`. This adds the component to the ASR blacklist.

1. **At the** `->` **prompt, set the** `component_state` **property to** `Disabled`**.**

```
-> set /SYS/PM0/CMP0/BOB1/CH0/D0 component_state=Disabled
```

2. **Reset the server so that the ASR command takes effect.**

```
-> stop /SYS
Are you sure you want to stop /SYS (y/n)? y
Stopping /SYS
-> start /SYS
Are you sure you want to start /SYS (y/n)? y
Starting /SYS
```

Note – In the ILOM shell there is no notification when the system is actually powered off. Powering off takes about a minute. Use the `show /HOST` command to determine if the host has powered off.

Related Information

- "View System Message Log Files" on page 36
- "Display System Components" on page 54
- "Enable System Components" on page 55

▼ Enable System Components

You enable a component by setting its `component_state` property to `Enabled`. This removes the component from the ASR blacklist.

1. **At the `->` prompt, set the `component_state` property to `Enabled`.**

```
-> set /SYS/PM0/CMP0/BOB1/CH0/D0 component_state=Enabled
```

2. **Reset the server so that the ASR command takes effect.**

```
-> stop /SYS
Are you sure you want to stop /SYS (y/n)? y
Stopping /SYS
-> start /SYS
Are you sure you want to start /SYS (y/n)? y
Starting /SYS
```

Note – In the ILOM shell there is no notification when the system is actually powered off. Powering off takes about a minute. Use the `show /HOST` command to determine if the host has powered off.

Related Information

- "View System Message Log Files" on page 36
- "Display System Components" on page 54
- "Disable System Components" on page 54

Verifying SunVTS Installation

SunVTS is a validation test suite that you can use to test this server. These topics provide an overview and a way to check if the SunVTS software is installed. For comprehensive SunVTS information, refer to the SunVTS 6.1 and SunVTS 7.0 documentation.

- "SunVTS Overview" on page 56
- "Verify SunVTS Installation" on page 57

SunVTS Overview

SunVTS is a validation test suite that you can use to test this server. The SunVTS software provides multiple diagnostic hardware tests that verify the connectivity and functionality of most hardware controllers and devices for this server. The SunVTS software provides these kinds of test categories:

- Audio
- Communication (serial and parallel)
- Graphic and video
- Memory
- Network
- Peripherals (hard drives, CD-DVD devices, and printers)
- Processor
- Storage

Use the SunVTS software to validate a system during development, production, receiving inspection, troubleshooting, periodic maintenance, and system or subsystem stressing.

You can run the SunVTS software through a browser UI, terminal UI, or command UI.

You can run tests in a variety of modes for online and offline testing.

The SunVTS software also provides a choice of security mechanisms.

The SunVTS software is provided on the preinstalled Oracle Solaris OS that shipped with the server, but it might not be installed.

Related Information

- SunVTS documentation
- "Verifying SunVTS Installation" on page 56

▼ Verify SunVTS Installation

1. **Log in as superuser.**
2. **Check for the presence of SunVTS packages using the** `pkginfo` **command.**

```
# pkginfo -l SUNvts SUNWvtsr SUNWvtsts SUNWvtsmn
```

   - If information about the packages is displayed, then the SunVTS software is installed.
   - If you receive messages reporting `ERROR: information for` *package* `was not found`, then the SunVTS software is not installed. You must take action to install the software before you can use it. You can obtain the SunVTS software from the following places:
     - Oracle Solaris OS media kit (DVDs)
     - As a download from the web

Related Information

- SunVTS documentation

Preparing for Service

These topics describe how to prepare the SPARC T3-4 server for servicing.

Safety Information

For your protection, observe the following safety precautions when setting up your equipment:

- Follow all cautions and instructions marked on the equipment and described in the documentation shipped with your system.
- Follow all cautions and instructions marked on the equipment and described in the *SPARC T3-4 Server Safety and Compliance Guide*.
- Ensure that the voltage and frequency of your power source match the voltage and frequency inscribed on the equipment's electrical rating label.
- Follow the electrostatic discharge safety practices as described in this section.

Safety Symbols

Note the meanings of the following symbols that might appear in this document:

Caution – There is a risk of personal injury or equipment damage. To avoid personal injury and equipment damage, follow the instructions.

Caution – Hot surface. Avoid contact. Surfaces are hot and might cause personal injury if touched.

Caution – Hazardous voltages are present. To reduce the risk of electric shock and danger to personal health, follow the instructions.

ESD Measures

Electrostatic discharge-sensitive devices, such as the express modules, hard drives, and DIMMs require special handling.

Caution – Circuit boards and hard drives contain electronic components that are extremely sensitive to static electricity. Ordinary amounts of static electricity from clothing or the work environment can destroy the components located on these boards. Do not touch the components along their connector edges.

Caution – You must disconnect all power supplies before servicing any of the components that are inside the chassis.

Antistatic Wrist Strap Use

Wear an antistatic wrist strap and use an antistatic mat when handling components such as hard drive assemblies, circuit boards, or express modules. When servicing or removing server components, attach an antistatic strap to your wrist and then to a metal area on the chassis. Following this practice equalizes the electrical potentials between you and the server.

Antistatic Mat

Place ESD-sensitive components such as motherboards, memory, and other PCBs on an antistatic mat.

Related Information

- "Removing Power From the System" on page 66
- "Accessing Internal Components" on page 69

Tools Needed for Service

You will need the following tools for most service operations:

- Antistatic wrist strap
- Antistatic mat
- No. 1 Phillips screwdriver
- No. 2 Phillips screwdriver
- No. 1 flat-blade screwdriver (battery removal)

Related Information

- "Understanding Component Replacement Categories" on page 63
- "Accessing Internal Components" on page 69

▼ Find the Chassis Serial Number

If you require technical support for your system, you will be asked to provide the server's chassis serial number. You can find the chassis serial number on a sticker located on the front of the server and on another sticker on the side of the server.

If it is not convenient to read either sticker, you can run the ILOM `show /SYS` command to obtain the chassis serial number.

- **Type `show /SYS` at the ILOM prompt.**

```
-> show /SYS

/SYS
   Targets:
       MB
       MB_ENV
       RIO
```

```
        PM0
        PM1
        FM0
...
   Properties:
        type = Host System
        ipmi_name = /SYS
        keyswitch_state = Normal
        product_name = T3-4
        product_part_number = 602-1234-01
        product_serial_number = 0723BBC006
        fault_state = OK
        clear_fault_action = (none)
        power_state = On

   Commands:
        cd
        reset
        set
        show
        start
        stop
```

Related Information

- "Locate the Server" on page 62

▼ Locate the Server

You can use the Locator LEDs to pinpoint the location of a server. This procedure is helpful when you need to identify one particular server from many other servers.

1. **At the ILOM command line, type:**

```
-> set /SYS/LOCATE value=Fast_Blink
```

   The white Locator LEDs (one on the front panel and one on the rear panel) blink.

2. **After locating the server with the blinking Locator LED, turn it off by pressing the Locator button.**

Note – Alternatively, you can turn off the Locator LED by running the ILOM `set /SYS/LOCATE value=off` command.

Related Information

- "Find the Chassis Serial Number" on page 61

Understanding Component Replacement Categories

FRU Reference

The following table identifies the server components that are field-replaceable.

TABLE: List of Field-Replaceable Units

Description	Quantity	FRU Name	Remove and Replace Instructions
Processor module	1 or 2	`/SYS/PMn`	"Servicing Processor Modules" on page 75
DIMM	16 or 32	`/SYS/PMn/CMPn/BOBn/CHn/Dn`	"Servicing DIMMs" on page 89
Hard drive	1 to 8	`/SYS/MB/HDDn`	"Servicing Hard Drives" on page 109
Power supply	4	`/SYS/PSn`	"Servicing Power Supplies" on page 119
RAID expansion module	2	`/SYS/MB/REMn`	"Servicing RAID Expansion Modules" on page 131
Service processor	1	`/SYS/MB/SP`	"Servicing the Service Processor" on page 135
System battery	1	`/SYS/MB/BAT`	"Servicing the System Battery" on page 141
Fan module	5	`/SYS/FMn`	"Servicing Fan Modules" on page 147
Express module	0 to 16	`/SYS/PCI-EMn`	"Servicing Express Modules" on page 155

TABLE: List of Field-Replaceable Units *(Continued)*

Description	Quantity	FRU Name	Remove and Replace Instructions
Rear I/O module	1	/SYS/RIO	"Servicing the Rear I/O Module" on page 169
System configuration PROM	1	/SYS/MB/SCC	"Servicing the System Configuration PROM" on page 177
Front I/O assembly	1	/SYS/MB/FIO	"Servicing the Front I/O Assembly" on page 183
Storage backplane	2	/SYS/MB/SASBP*n*	"Servicing the Storage Backplane" on page 189
Main module motherboard	1	/SYS/MB	"Servicing the Main Module Motherboard" on page 197
Rear chassis subassembly	1	N/A	"Servicing the Rear Chassis Subassembly" on page 205

Related Information

- "Removing Power From the System" on page 66
- "Returning the Server to Operation" on page 209

Hot Service, Replacement by Customer

The following components can be replaced while power is present on the server. These components can be replaced by customers.

Hot Service Components (system can have power present)	Notes
Processor module	A single processor module is a hot service component only if there are two operating processor modules in the server and if you are replacing the module located in processor module slot 1
Hard drive	Drive must be offline
Hard drive filler panel	Needed to preserve proper interior air flow
Power supply	If three or more power supplies are in use
Fan module	If four or more fan modules are operational

Hot Service Components (system can have power present)	Notes
Express module	

Although hot service procedures can be performed while the server is running, you should usually bring it to standby mode as the first step in the replacement procedure. You do this by momentarily pressing the Power button on the front panel. See the descriptions of the Power OK LED and the Power Button in "Power Off the Server (Power Button - Graceful)" on page 68 for more information about the standby mode.

Related Information

- "Accessing Internal Components" on page 69

Cold Service, Replacement by Customer

The following components require the server to be powered down. These components can be replaced by customers.

Cold Service (power down system and unplug power cables)	Notes
Processor module	Processor module is a cold service component if there is only one operating processor module in the server
DIMM	
Main module	
System battery	
RAID expansion module	
Service processor	
Rear I/O module	

See "Power Off the Server (Service Processor Command)" on page 67 for the procedure to shut down the server.

Related Information

- "Removing Power From the System" on page 66
- "Accessing Internal Components" on page 69

Cold Service, Replacement by Authorized Service Personnel

The following components must be replaced by authorized service personnel. These replacement procedures can only be done when the server is powered down and power cables are unplugged.

Authorized Service Personnel Only - Cold Service (power down system and disconnect power cables)	Notes
System configuration PROM	
Front I/O assembly	
Storage backplane	
Main module motherboard	Transfer system configuration PROM to new motherboard
Rear chassis subassembly	

See "Power Off the Server (Service Processor Command)" on page 67 for the procedure to shut down the server.

Related Information

- "Removing Power From the System" on page 66
- "Accessing Internal Components" on page 69

Removing Power From the System

These topics describe different methods for removing power from the chassis.

- "Power Off the Server (Service Processor Command)" on page 67
- "Power Off the Server (Power Button - Graceful)" on page 68
- "Power Off the Server (Emergency Shutdown)" on page 68

▼ Power Off the Server (Service Processor Command)

You can use the service processor to perform a graceful shutdown of the server. This type of shutdown ensures that all of your data is saved and that the server is ready for restart.

Note – Additional information about powering off the server is provided in the *SPARC T3 Series Servers Administration Guide*.

---

1. **Log in as superuser or equivalent.**

   Depending on the type of problem, you might want to view server status or log files. You also might want to run diagnostics before you shut down the server.

2. **Notify affected users that the server will be shut down.**

   Refer to the Oracle Solaris system administration documentation for additional information.

3. **Save any open files and quit all running programs.**

   Refer to your application documentation for specific information for these processes.

4. **Shut down all logical domains.**

   Refer to the Oracle Solaris system administration documentation for additional information.

5. **Shut down the Oracle Solaris OS.**

   Refer to the Oracle Solaris system administration documentation for additional information.

6. **Switch from the system console to the `->` prompt by typing the `#.` (Hash Period) key sequence.**

7. **At the `->` prompt, type the `stop /SYS` command.**

Note – You can also use the Power button on the front of the server to initiate a graceful server shutdown. (See "Power Off the Server (Power Button - Graceful)" on page 68.) This button is recessed to prevent accidental server power off.

---

8. **Unplug all power cords from the server.**

Caution – Because 3.3v standby power is always present in the system, you must unplug the power cords before accessing any cold-serviceable components.

Related Information

- "Power Off the Server (Power Button - Graceful)" on page 68
- "Power Off the Server (Emergency Shutdown)" on page 68

▼ Power Off the Server (Power Button - Graceful)

This procedure places the server in the power standby mode. In this mode, the Power OK LED blinks rapidly.

1. **Press and release the recessed Power button.**
2. **Unplug all power cords from the server.**

Caution – Because 3.3v standby power is always present in the system, you must unplug the power cords before accessing any cold-serviceable components.

Related Information

- "Power Off the Server (Service Processor Command)" on page 67
- "Power Off the Server (Emergency Shutdown)" on page 68

▼ Power Off the Server (Emergency Shutdown)

Caution – All applications and files will be closed abruptly without saving changes. File system corruption might occur.

1. **Press and hold the Power button for four seconds.**
2. **Unplug all power cords from the server.**

Caution – Because 3.3v standby power is always present in the system, you must unplug the power cords before accessing any cold-serviceable components.

Related Information

- "Power Off the Server (Service Processor Command)" on page 67
- "Power Off the Server (Power Button - Graceful)" on page 68

Accessing Internal Components

▼ Prevent ESD Damage

Many components housed within the chassis can be damaged by electrostatic discharge. To protect these components from damage, perform the following steps before opening the chassis for service.

1. **Prepare an antistatic surface to set parts on during the removal, installation, or replacement process.**

   Place ESD-sensitive components such as the printed circuit boards on an antistatic mat. The following items can be used as an antistatic mat:

   - Antistatic bag used to wrap a replacement part
   - ESD mat
   - A disposable ESD mat (shipped with some replacement parts or optional system components)

2. **Attach an antistatic wrist strap.**

   When servicing or removing server components, attach an antistatic strap to your wrist and then to a metal area on the chassis.

Related Information

- "Safety Information" on page 59

Accessing Main Module Components

This topic describes how to remove the main module in order to access the following customer-replaceable or field-replaceable components within the main module, and then install the main module back into the server after you have replaced those internal components:

- RAID expansion modules
- Service processor
- System battery
- System configuration PROM
- Front I/O assembly
- Storage backplane

For instructions on replacing the motherboard in the main module, see "Servicing the Main Module Motherboard" on page 197.

- "Remove the Main Module" on page 70
- "Install the Main Module" on page 72

▼ Remove the Main Module

1. **Shut down the server.**

   See "Removing Power From the System" on page 66.

2. **Locate the main module in the server.**

   See "Front Components" on page 2.

3. **Squeeze the release latches together on the two extraction levers and pull the extraction levers out to disengage the main module from the server.**

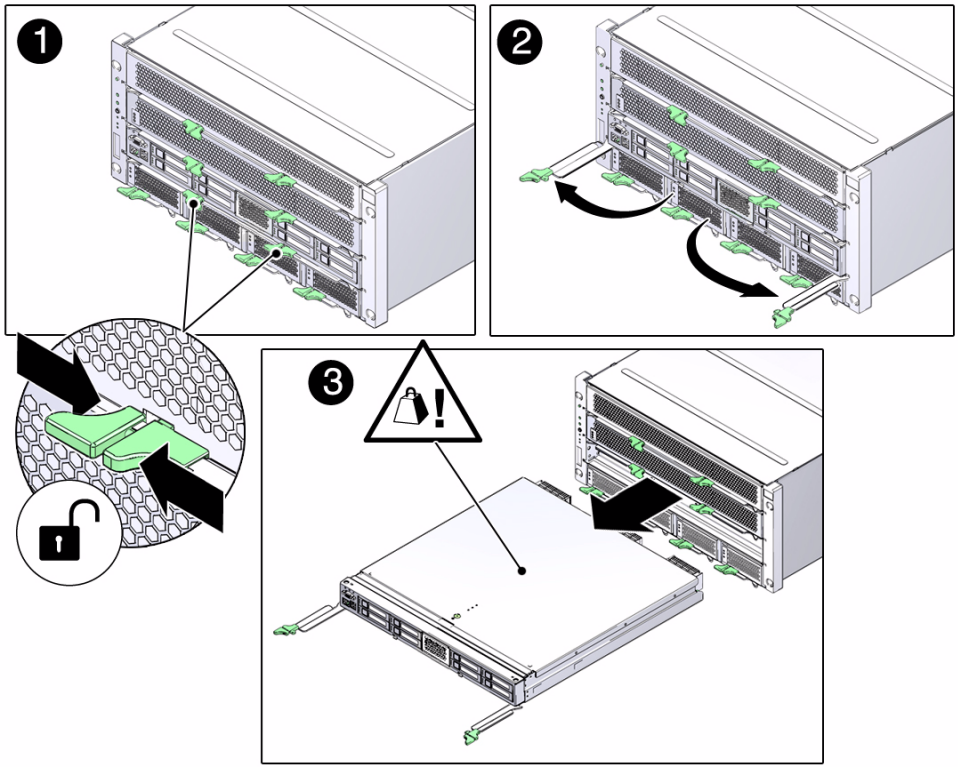

4. **Pull the main module halfway out of the server.**

5. **Press the levers back together, toward the center of the main module.**

   This will keep the levers from getting damaged when you remove the main module from the server.

6. **Remove the cover from the main module:**

   a. **Press down on the green button at the top of the cover to disengage the cover from the main module.**

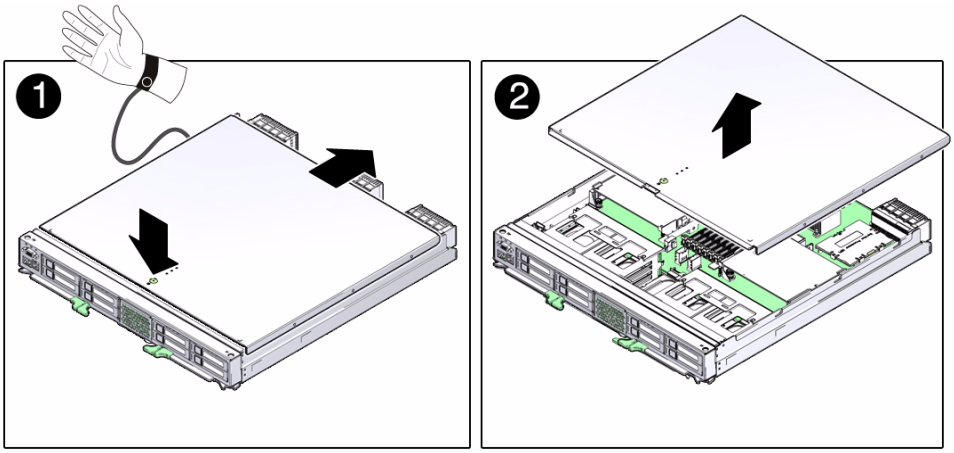

b. **Keeping the button pressed down, push the cover toward the rear of the main module and lift the cover up and away from the main module.**

7. **Service the component inside the main module.**

   The following components are accessible inside the main module:

   - "Servicing RAID Expansion Modules" on page 131
   - "Servicing the Service Processor" on page 135
   - "Servicing the System Battery" on page 141
   - "Servicing the System Configuration PROM" on page 177
   - "Servicing the Front I/O Assembly" on page 183
   - "Servicing the Storage Backplane" on page 189

Related Information

- "Install the Main Module" on page 72

▼ Install the Main Module

1. **Place the cover back onto the main module and slide the cover forward until the latch clicks into place.**

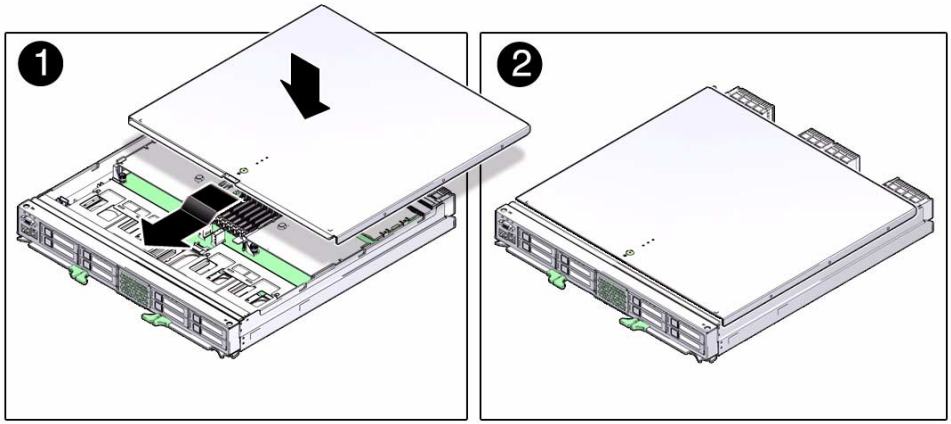

2. **Insert the main module back into its slot in the server.**

3. **Press the levers back together, toward the center of the module, and press them firmly against the module to fully seat the module back into the server.**

   The levers should click into place when the module is fully seated in the server.

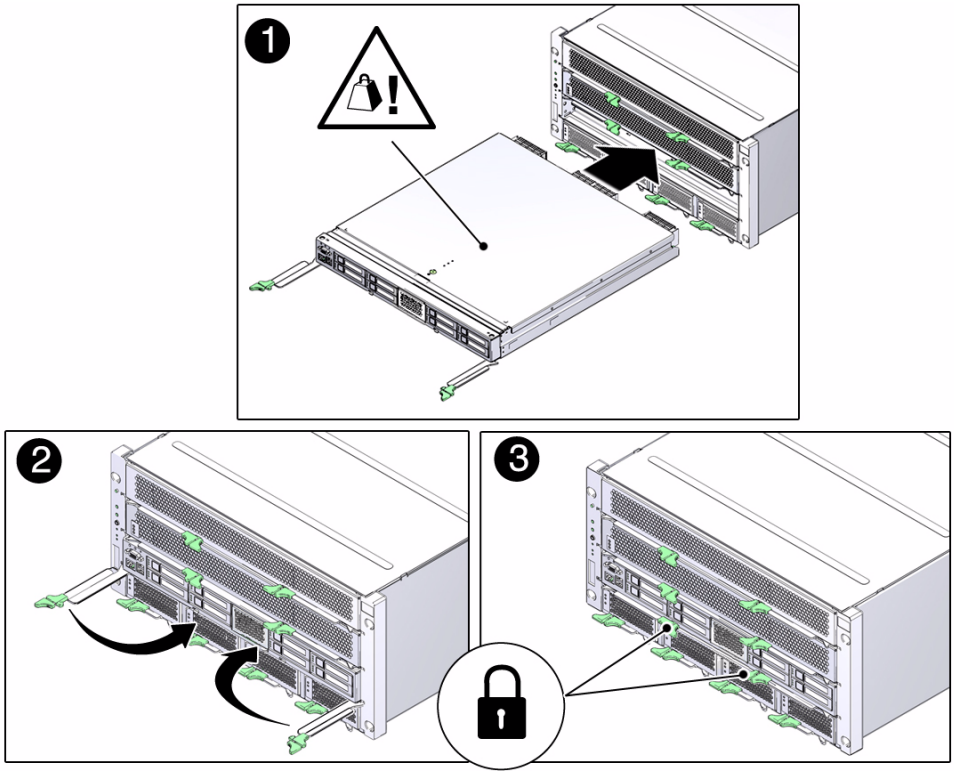

4. **Power on the server.**

   See "Returning the Server to Operation" on page 209.

Related Information

- "Remove the Main Module" on page 70

Filler Panels

Each server is shipped with module-replacement filler panels for processor modules, disk drives, DIMMs, and express modules. A filler panel is an empty metal or plastic enclosure that does not contain any functioning system hardware or cable connectors.

The filler panels are installed at the factory and must remain in the server until you replace them with a purchased module to ensure proper airflow through the system. If you remove a filler panel and continue to operate your system with an empty module slot, the server might overheat due to improper airflow. For instructions on removing or installing a filler panel for a server component, refer to the section in this guide about servicing that component.

Related Information

- "Accessing Internal Components" on page 69

Servicing Processor Modules

These topics describe service procedures for the processor modules in the server.

Processor Module Configuration Reference

This topic shows the locations of the processor modules in the server. Note that if only one processor module is installed in the server, the single processor module will be installed in the lower processor module slot (slot 0) and a filler panel will be installed in the upper processor module slot (slot 1).

FIGURE: Processor Module Configuration Reference

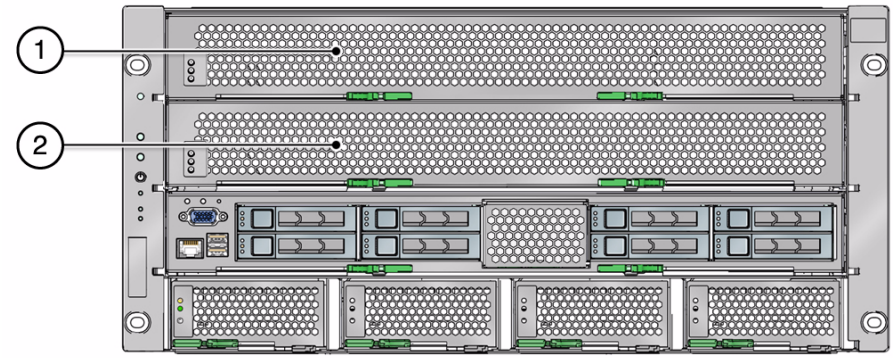

Figure Legend

1	Processor module 1 or filler panel	**2**	Processor module 0

Related Information

- "Processor Module LEDs" on page 76
- "Locate a Faulty Processor Module" on page 79
- "Remove a Processor Module" on page 79
- "Install a Processor Module" on page 83
- "Verify Processor Module Functionality" on page 88

Processor Module LEDs

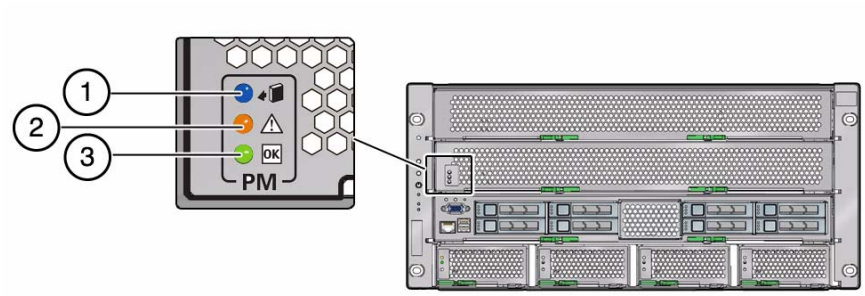

No.	LED	Icon	Description
1	Ready to Remove (blue)		Indicates that a processor module can be removed during a hot-plug operation.
2	Service Required (amber)		Indicates that the processor module has experienced a fault condition.
3	OK (green)	OK	Indicates if the processor module is available for use. • On – The server is running and the processor module is powered up. • Off – The server is powered down and the processor module is in standby mode. If the server is powered on, then this indicates that the processor module is powered down (the blue Ready to Remove LED will be lit in this case).

Related Information

- "Processor Module Configuration Reference" on page 75
- "Locate a Faulty Processor Module" on page 79
- "Remove a Processor Module" on page 79
- "Install a Processor Module" on page 83
- "Verify Processor Module Functionality" on page 88

Replacing a Faulty Processor Module

Note – This topic describes how to replace a processor module that has failed. For instructions on increasing the number of processor modules in your system from one processor module to two, see "Install a New Processor Module" on page 85.

The following topics describe the procedures for replacing a faulty processor module, regardless of whether it is a hot-swappable or a cold-swappable component.

- "Processor Module Replacement Guidelines" on page 78
- "Locate a Faulty Processor Module" on page 79
- "Remove a Processor Module" on page 79
- "Install a Processor Module" on page 83

Processor Module Replacement Guidelines

A processor module could be a hot-service or a cold-service component that can be replaced by a customer, depending on the number of operating processor modules installed in the server and the location of the faulty processor module:

- A processor module is a hot-service component if:
  - There are two operating processor modules in the server.
  - The faulty processor module that you want to replace is located in processor module slot 1 in the system. See "Processor Module Configuration Reference" on page 75 for the locations of the processor module slots.

  Note that you can not leave a processor module slot open for longer than 1 minute if you remove a processor module from a running server. You should have a replacement processor module or a processor module filler panel available to install in the empty slot if you think the slot will be left open longer than 1 minute.

  In addition, if you replace a processor module in a running server, the replacement processor module will not come online until the next power cycle of the server. This allows you to replace a processor module without having to power off the server immediately, and then power cycle the server when it is convenient for you to do so.
- A processor module is a cold-service component if there is only one operating processor module in the server or if the faulty processor module that you want to replace is located in processor module slot 0 in the system.

Related Information

- "Processor Module Configuration Reference" on page 75
- "Processor Module LEDs" on page 76
- "Locate a Faulty Processor Module" on page 79
- "Remove a Processor Module" on page 79
- "Install a Processor Module" on page 83

▼ Locate a Faulty Processor Module

The following LEDs are lit when a processor module fault is detected:

- Front and rear System Fault (system Service Required) LEDs
- Service Required LED on the faulty processor module

1. **Determine if the System Service Required LEDs are lit on the front panel or the rear I/O module.**

   See "Interpreting Diagnostic LEDs" on page 16.

2. **From the front of the server, check the processor module LEDs to identify which processor module needs to be replaced.**

   See "Processor Module LEDs" on page 76. The amber Service Required LED will be lit on the processor module that needs to be replaced.

3. **Remove the faulty processor module.**

   See "Remove a Processor Module" on page 79.

Related Information

- "Processor Module Configuration Reference" on page 75
- "Processor Module LEDs" on page 76
- "Remove a Processor Module" on page 79
- "Install a Processor Module" on page 83
- "Verify Processor Module Functionality" on page 88

▼ Remove a Processor Module

1. **Locate the processor module in the server that you want to remove.**

   See "Locate a Faulty Processor Module" on page 79 to locate a faulty processor module.

2. **Determine how many operating processor modules are in the server.**

   - If there are two operating processor modules in the server, then you may not have to power off the server before removing the processor module. Go to Step 3.
   - If there is only one operating processor module in the server, then you must power off the server before removing the processor module. See "Removing Power From the System" on page 66, then go to Step 5.

3. **Determine if the faulty processor module that you will be removing is in processor module slot 0 or slot 1.**

   See "Front Components" on page 2 for the locations of the processor modules in the server.

   - If the faulty processor module is in slot 0, then you must power off the server before removing the processor module. See "Removing Power From the System" on page 66, then go to Step 5.
   - If the faulty processor module is in slot 1, then you can remove the processor module without having to power down the system, as long as you have a processor module filler panel that you can install in the empty slot.

Note – You can not leave a processor module slot open for longer than 1 minute if you remove a processor module from a running server. If you do not have a processor module filler panel, see "Removing Power From the System" on page 66, then go to Step 5.

   If you have a processor module filler panel, go to Step 4.

4. **Verify that the blue Ready to Remove LED is lit before proceeding.**

   The Ready to Remove LED will come on when certain events prevent a processor module from operating normally after you have powered on the server. See "Processor Module LEDs" on page 76 for the location of the Ready to Remove LED.

5. **Squeeze the release latches together on the two extraction levers and pull the extraction levers out to disengage the processor module from the server.**

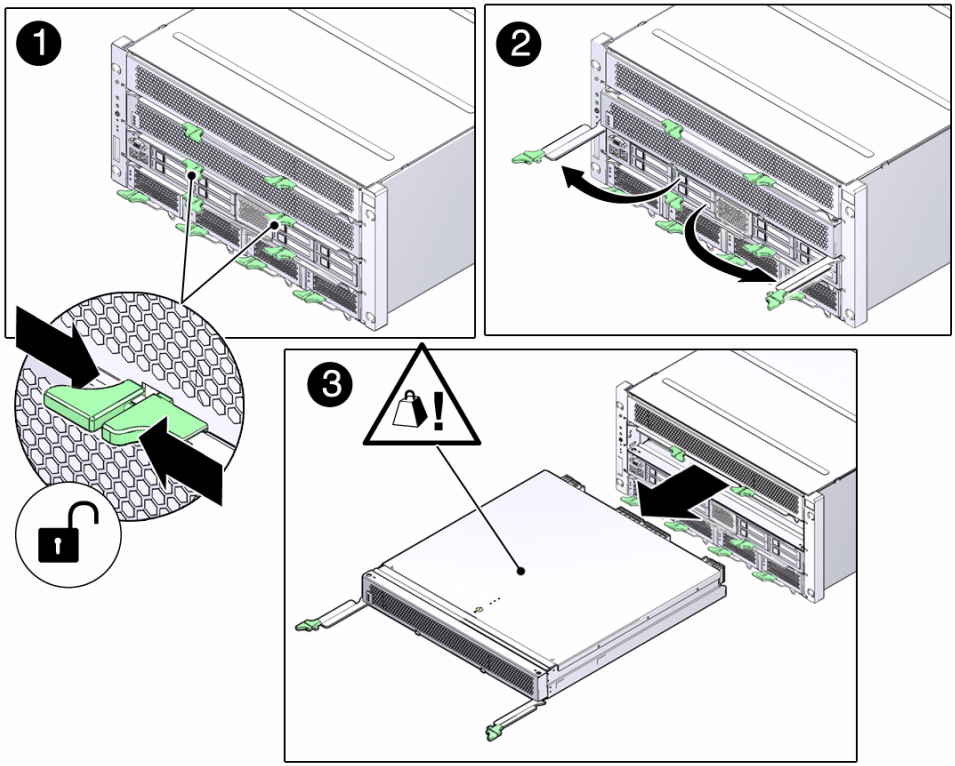

6. **Pull the processor module halfway out of the server.**
7. **Press the levers back together, toward the center of the processor module.**

   This will keep the levers from getting damaged when you remove the processor module from the server.
8. **Using two hands, completely remove the processor module and place the module on an antistatic mat.**

Caution – Do not touch the connectors at the rear of the processor module.

---

9. **If you removed a processor module from a running server, install a processor module filler panel within 1 minute.**

   The remaining processor module may overheat if you leave the empty slot open for longer than 1 minute in a running server.
10. **Remove the cover from the processor module:**

    a. **Press down on the green button at the top of the cover to disengage the cover from the processor module.**

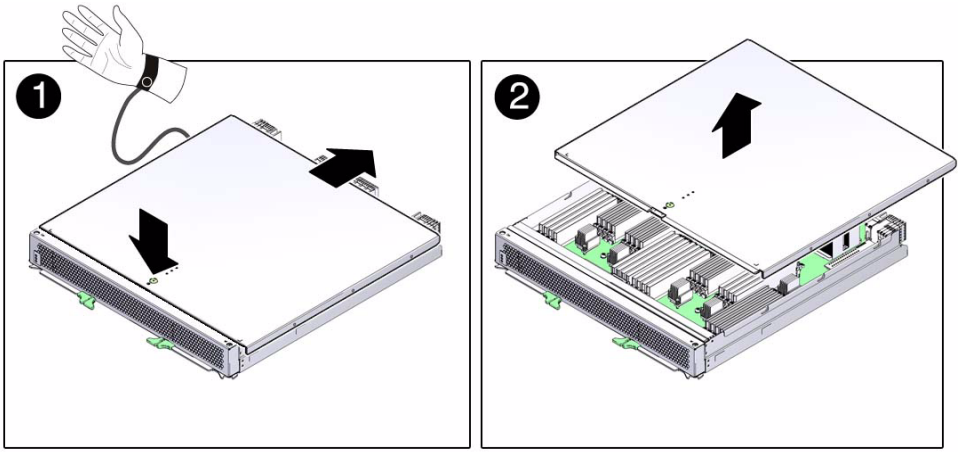

b. **Keeping the button pressed down, push the cover toward the rear of the processor module and lift the cover up and away from the processor module.**

11. **Determine if you are replacing a faulty processor module or if you are replacing or installing DIMMs within the processor module.**

- If you are replacing a faulty processor module, follow these steps:

  a. **Remove all DIMMs from the faulty processor module and set them in a safe place.**

  See "Remove a DIMM" on page 100. You will install the DIMMs into the new processor module after you have replaced the faulty module. You should install the DIMMs in the same slots in the new processor module when you remove them from the old, faulty module, especially if you have mixed memory configurations in old processor module. You can accomplish this by moving the DIMMs over one at a time, from the old processor module to the same slots in the new module, or by laying the DIMMs out on a flat, safe surface in left-to-right rows and groups, and then installing them in the new module in the same order.

  b. **Install a replacement processor module in the server.**

  See "Install a Processor Module" on page 83. If you are not replacing the processor module right away, you must install a processor module filler panel to ensure adequate airflow in the system.

- If you are replacing or installing DIMMs within the processor module, see "Servicing DIMMs" on page 89.

Related Information

- "Processor Module Configuration Reference" on page 75
- "Processor Module LEDs" on page 76

- "Locate a Faulty Processor Module" on page 79
- "Servicing DIMMs" on page 89
- "Install a Processor Module" on page 83
- "Verify Processor Module Functionality" on page 88

▼ Install a Processor Module

1. **Determine if you are installing a processor module after replacing or installing DIMMs, or if you are installing a new processor module to replace a faulty one.**
   - If you are installing a processor module after replacing or installing DIMMs, go to Step 2.
   - If you are installing a new processor module to replace a faulty one, install all of the DIMMs that you removed from the faulty processor module into the replacement module. See "Install a DIMM" on page 102.
2. **Place the cover back onto the processor module and slide the cover forward until the latch clicks into place.**

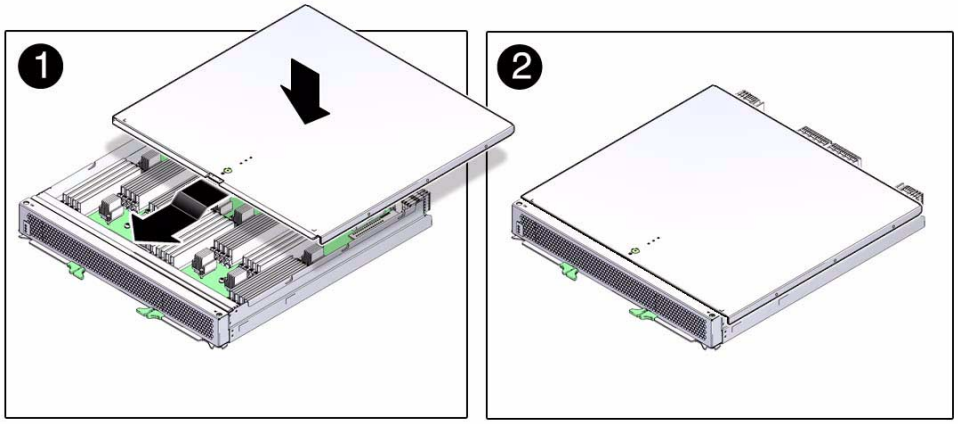

3. **Remove the processor module filler panel, if one is installed.**
4. **Insert the processor module into the empty processor module slot in the server.**
5. **Bring the levers together toward the center of the module and press them firmly against the module to fully seat the module back into the server.**

   The levers should click into place when the module is fully seated in the server.

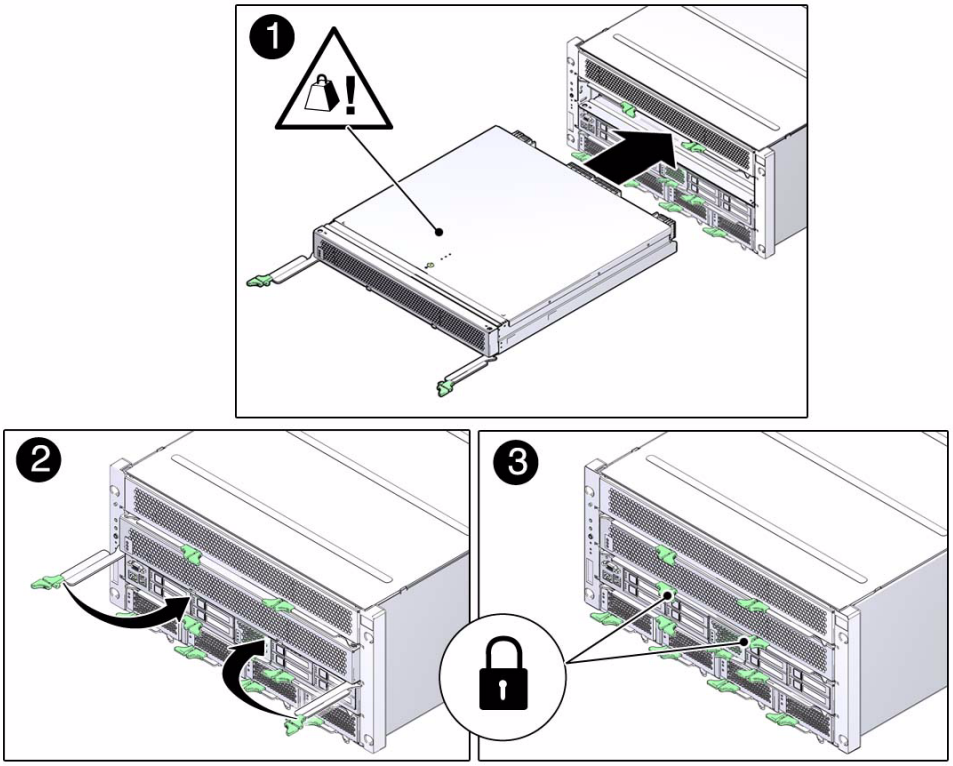

6. **Power on the server, if necessary.**

   See "Returning the Server to Operation" on page 209.

7. **Verify the processor module functionality.**

   See "Verify Processor Module Functionality" on page 88.

Related Information

- *Oracle VM Server for SPARC 2.0 Administration Guide*
- "Processor Module Configuration Reference" on page 75
- "Processor Module LEDs" on page 76
- "Locate a Faulty Processor Module" on page 79
- "Remove a Processor Module" on page 79
- "Servicing DIMMs" on page 89
- "Verify Processor Module Functionality" on page 88

▼ Install a New Processor Module

This topic describes how to increase the number of processor modules in your system from one processor module to two. For instructions on replacing a processor module that has failed, see "Replacing a Faulty Processor Module" on page 77.

1. **Determine if you have logical domains (LDoms) configured on the single processor module that you currently have installed in your server.**
   - If you do not have LDoms configured on the single processor in your server, go to Step 2.
   - If you have LDoms configured on the single processor module in your server, follow these steps to preserve the original LDoms configuration before you add the second processor module:

     a. **For each of the LDoms created, save the LDom constraints configured as an XML file:**

```
# ldm list-constraints -x ldom >ldom.xml
```

For example:

```
# ldm list-constraints -x ldg1 >lgd1.xml
```

Perform this step individually for all LDoms present in your system, saving the constraints for each LDom as a separate xml file. For example, save the primary domain as `primary.xml`, the first guest domain as `ldg1.xml`, and so on.

     b. **Power down the system before installing the second processor module.**

     See "Removing Power From the System" on page 66.

     c. **Go to Step 2.**

2. **Remove the filler panel from the empty processor module slot, if one is installed.**

3. **Insert the new processor module into the empty processor module slot in the server.**

4. **Bring the levers together toward the center of the module and press them firmly against the module to fully seat the module back into the server.**

   The levers should click into place when the module is fully seated in the server.

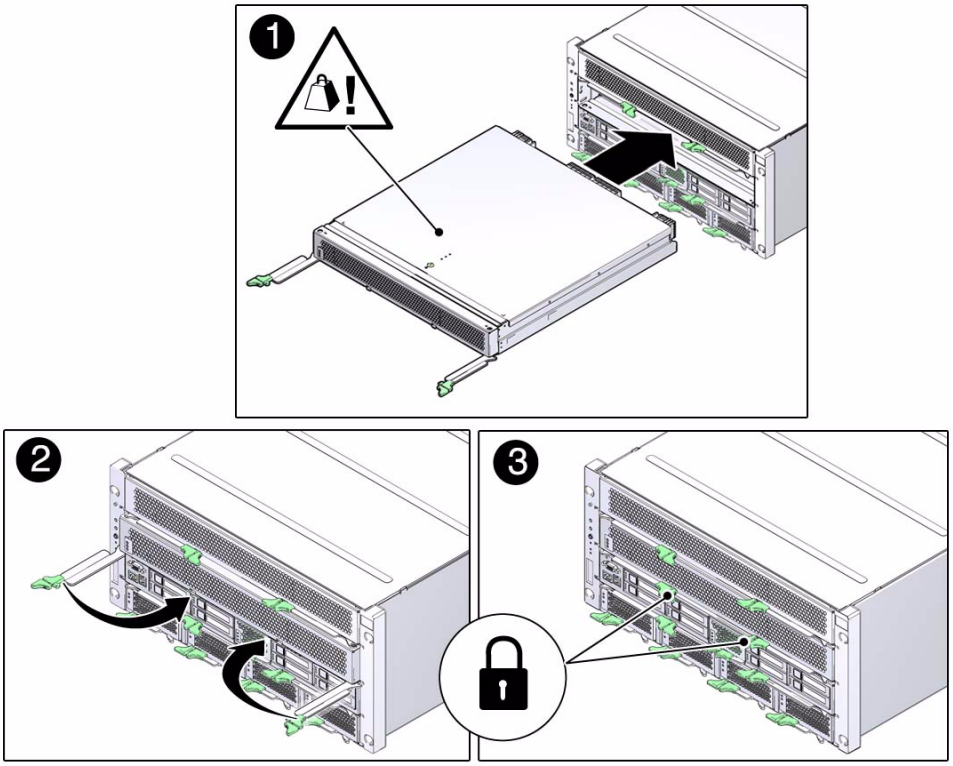

5. **Power on the server.**

   See "Returning the Server to Operation" on page 209.

6. **Determine if you need to restore the LDom configuration information.**

   - If you had not configured LDoms on the single processor module before installing the second one, you do not have to restore the LDom configuration information. Go to Step 7.
   - If you had configured LDoms on the single processor module before installing the second one, follow these procedures to restore the LDom configuration information that you saved earlier in this process:

     a. **Change the server's method of booting to its factory default setting:**

```
-> set /HOST/bootmode config=factory-default
```

     b. **Boot the server again using the** `start /SYS` **command at the service processor prompt:**

```
-> start /SYS
```

c. List all the guest domains that you currently have configured:

```
# ldm ls
```

d. Stop all the guest domains using the -a option:

```
# ldm stop-domain -a
```

e. Unbind each of the guest domains:

```
# ldm unbind-domain ldom
```

f. Destroy each of the guest domains:

```
# ldm destroy ldom
```

g. Restore the primary domain configuration:

```
# ldm init-system -i primary.xml
```

h. Restore each guest domain configuration.

For each guest domain, enter the following commands to add, bind, and then restart each domain:

```
# ldm add-domain -i ldg1.xml
# ldm bind ldg1
# ldm start ldg1
```

7. **Verify the processor module functionality.**

   See "Verify Processor Module Functionality" on page 88.

Related Information

- *Oracle VM Server for SPARC 2.0 Administration Guide*
- "Processor Module Configuration Reference" on page 75
- "Processor Module LEDs" on page 76
- "Verify Processor Module Functionality" on page 88

▼ Verify Processor Module Functionality

1. **If you replaced a faulty processor module, use the `show faulty` command to determine if the replaced processor module is shown as enabled or disabled:**

```
-> show faulty
```

   a. **If the output from the show faulty command shows the replacement processor module as enabled, go to** Step 2**.**

   b. **If the output from the show faulty command shows the replacement processor module as disabled, go to** "Detecting and Managing Faults" on page 11 **to clear the PSH-detected fault from the server.**

2. **Determine if you replaced a processor module in a running server.**

   If you replaced a processor module in a running server, the replacement processor module will not come online until you have power-cycled the server. Go to "Preparing for Service" on page 59 for instructions on powering off the server, then go to "Returning the Server to Operation" on page 209 for instructions on powering the server back on.

3. **Verify that the OK LED is lit on the processor module and that the Fault LED is not lit.**

   See "Processor Module LEDs" on page 76.

4. **Verify that the front and rear Service Required LEDs are not lit.**

   See "Front Panel System Controls and LEDs" on page 16 and "Rear I/O Module LEDs" on page 19.

5. **Perform one of the following tasks based on your verification results:**

   - If the previous steps did not clear the fault, see "Diagnostics Process" on page 12.
   - If Step 3 and Step 4 indicate that no faults have been detected, then the processor module has been replaced successfully. No further action is required.

Related Information

- "Processor Module Configuration Reference" on page 75
- "Processor Module LEDs" on page 76
- "Locate a Faulty Processor Module" on page 79
- "Remove a Processor Module" on page 79
- "Install a Processor Module" on page 83

Servicing DIMMs

These topics describe service procedures for the DIMMs in the server.

Memory Fault Handling Overview

A variety of features play a role in how the memory subsystem is configured and how memory faults are handled. Understanding the underlying features helps you identify and repair memory problems.

The following server features manage memory faults:

- **POST** – By default, POST runs when the server is powered on.

  For CEs, POST forwards the error to the PSH daemon for error handling. If an uncorrectable memory fault is detected, POST displays the fault with the device name of the faulty DIMMs, and logs the fault. POST then disables the faulty DIMMs. Depending on the memory configuration and the location of the faulty DIMM, POST disables half of physical memory in the system, or half the physical memory and half the processor threads. When this offlining process occurs in normal operation, you must replace the faulty DIMMs based on the fault message and enable the disabled DIMMs with the ILOM command `set` *device* `component_state=enabled` where *device* is the name of the DIMM being enabled (for example, `set /SYS/PM0/CMP0/BOB0/CH0/D0 component_state=enabled`).

- **PSH technology** – Oracle Solaris Predictive Self-Healing uses the Fault Manager daemon (`fmd`) to watch for various kinds of faults. When a fault occurs, the fault is assigned a UUID and logged. PSH reports the fault and suggests a replacement for the DIMMs associated with the fault.

If you suspect the server has a memory problem, run the ILOM `show faulty` command. This command lists memory faults and identifies the DIMM modules associated with the fault.

Related Information

- "POST Overview" on page 43
- "PSH Overview" on page 37
- "PSH-Detected Fault Example" on page 38
- "Locate a Faulty DIMM Using the DIMM Fault Remind Button" on page 99
- "Locate a Faulty DIMM Using the show faulty Command" on page 100

Understanding DIMM Configurations

These topics provide the information that you will need to determine how many DIMMs to install in the processor modules, where those DIMMs should be installed on the processor modules, and what size DIMM you should use.

Description	Links
Understand the DIMM configuration guidelines.	"DIMM Configuration Guidelines" on page 91
Understand the different DIMM configuration options that are available to you.	• "Half-Populated Configuration" on page 91 • "3/4-Populated Configuration" on page 93 • "Fully-Populated Configuration" on page 94
Determine how to populate the DIMM slots in the processor modules depending on the following factors: • The number of processor modules in your system • The size of the DIMMs that you have available • The total amount of memory that you would like in each processor module	• "One Processor Module Memory Configurations" on page 96 • "Two Processor Module Memory Configurations" on page 97

DIMM Configuration Guidelines

Consider the following guidelines when installing, upgrading, or replacing DIMMs:

- There are a total of 32 slots that support DDR3 DIMMs within each processor module.
- There are two supported DIMM capacities: 4 GByte and 8 GByte.
- The DIMM slots are organized into four branches, with each branch connected to a separate Buffer-on-Board (BOB) ASIC. The four branches are designated BOB0 through BOB3.
- Each BOB ASIC has two DDR3 channels, with each channel supporting two DIMMs. These configuration details are illustrated in the figures in the following topics.
- DIMM slots that do not have a DIMM installed must have DIMM fillers plugged into the sockets.
- Sixteen of the 32 DIMM slots (four banks of four DIMM slots) are associated with CMP0, and the other sixteen DIMM slots are associated with CMP1. The figures in the following topics show which DIMM slots are associated with each CMP.

Related Information

- "Half-Populated Configuration" on page 91
- "3/4-Populated Configuration" on page 93
- "Fully-Populated Configuration" on page 94
- "One Processor Module Memory Configurations" on page 96
- "Two Processor Module Memory Configurations" on page 97
- "Remove a DIMM" on page 100
- "Install a DIMM" on page 102
- "Verify DIMM Functionality" on page 106
- "Increase System Memory With Additional DIMMs" on page 104

Half-Populated Configuration

The following figure shows where the DIMMs should be installed in a half-populated configuration. Use the information in this topic in conjunction with the information provided in the following topics:

- "One Processor Module Memory Configurations" on page 96
- "Two Processor Module Memory Configurations" on page 97

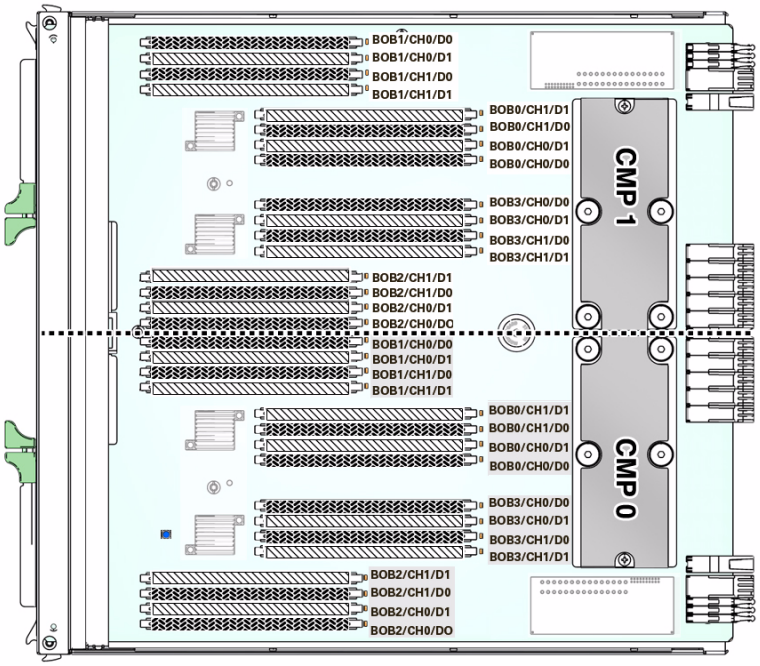

TABLE: Legend for Half-Populated Configuration

Symbol	Meaning
	Denotes a populated slot.
	Denotes an unpopulated slot.

A half-populated configuration will have the following characteristics for each processor module:

- Eight 4 or 8 Gbyte DIMMs installed in the slots related to CMP 1
- Eight 4 or 8 Gbyte DIMMs installed in the slots related to CMP 0

Also note that the DIMM slots are color coded to help you determine which slots should be populated for different configurations. For a half-populated configuration, the following slots will be populated or empty:

- Blue color-coded DIMM slots: Populated
- White color-coded DIMM slots: Populated
- Black color-coded DIMM slots: Empty

Related Information

- "DIMM Configuration Guidelines" on page 91
- "3/4-Populated Configuration" on page 93
- "Fully-Populated Configuration" on page 94
- "One Processor Module Memory Configurations" on page 96
- "Two Processor Module Memory Configurations" on page 97
- "Install a DIMM" on page 102
- "Increase System Memory With Additional DIMMs" on page 104
- "Verify DIMM Functionality" on page 106

3/4-Populated Configuration

The following figure shows where the DIMMs should be installed in a 3/4-populated configuration. Use the information in this topic in conjunction with the information provided in the following topics:

- "One Processor Module Memory Configurations" on page 96
- "Two Processor Module Memory Configurations" on page 97

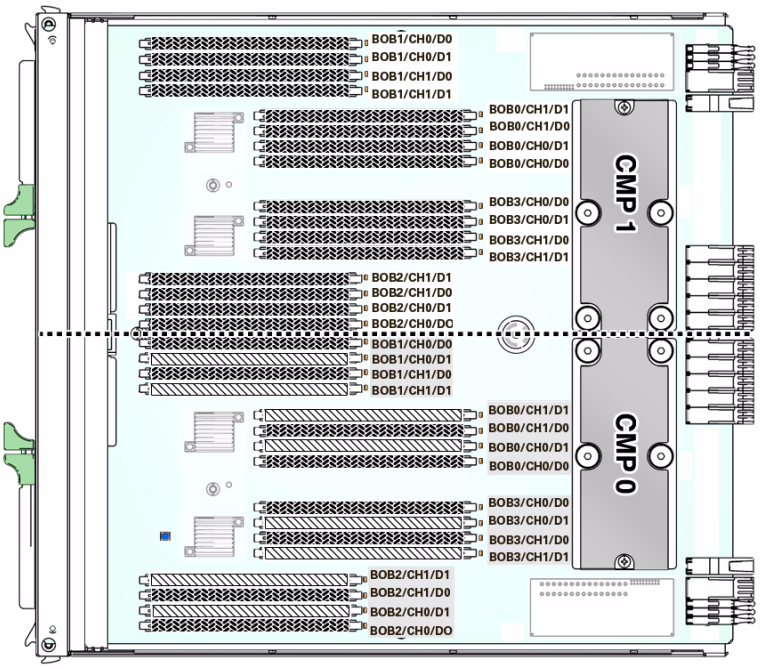

TABLE: Legend for 3/4-Populated Configuration

Symbol	Meaning
	Denotes a populated slot.
	Denotes an unpopulated slot.

A 3/4-populated configuration will have the following characteristics for each processor module:

- Sixteen 4 or 8 Gbyte DIMMs installed in the slots related to CMP 1
- Eight 4 or 8 Gbyte DIMMs installed in the slots related to CMP 0

Also note that the DIMM slots are color coded to help you determine which slots should be populated for different configurations. For a 3/4-populated configuration, the following slots will be populated or empty:

- Blue color-coded DIMM slots: Populated
- White color-coded DIMM slots: Populated
- Black color-coded DIMM slots:
  - CMP 1 bank: Populated
  - CMP 0 bank: Empty

Related Information

- "DIMM Configuration Guidelines" on page 91
- "Half-Populated Configuration" on page 91
- "Fully-Populated Configuration" on page 94
- "One Processor Module Memory Configurations" on page 96
- "Two Processor Module Memory Configurations" on page 97
- "Install a DIMM" on page 102
- "Increase System Memory With Additional DIMMs" on page 104
- "Verify DIMM Functionality" on page 106

Fully-Populated Configuration

The following figure shows where the DIMMs should be installed in a fully-populated configuration. Use the information in this topic in conjunction with the information provided in the following topics:

- "One Processor Module Memory Configurations" on page 96
- "Two Processor Module Memory Configurations" on page 97

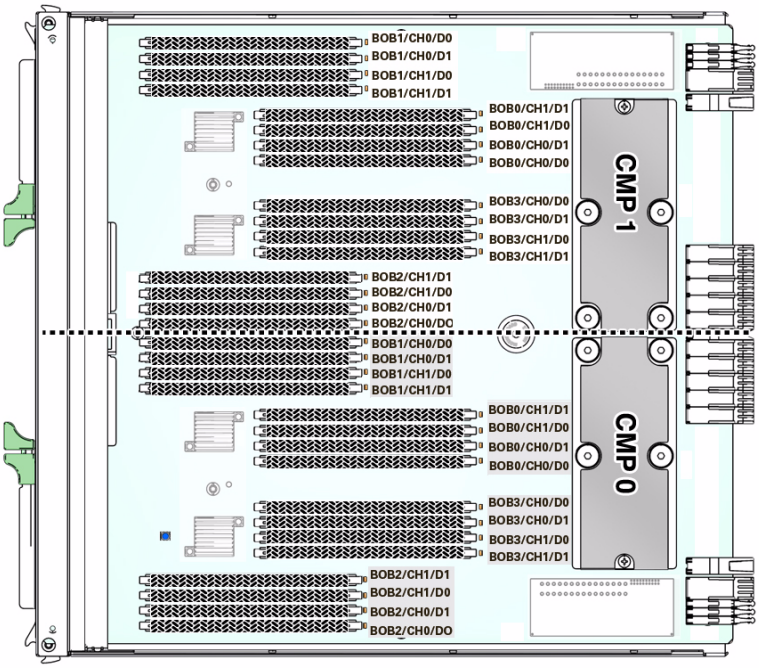

TABLE: Legend for Fully-Populated Configuration

Symbol	Meaning
	Denotes a populated slot.
	Denotes an unpopulated slot.

A fully-populated configuration will have the following characteristics for each processor module:

- Sixteen 4 or 8 Gbyte DIMMs installed in the slots related to CMP 1
- Sixteen 4 or 8 Gbyte DIMMs installed in the slots related to CMP 0

Also note that the DIMM slots are color coded to help you determine which slots should be populated for different configurations. For a fully-populated configuration, the following slots will be populated or empty:

- Blue color-coded DIMM slots: Populated
- White color-coded DIMM slots: Populated

- Black color-coded DIMM slots: Populated

Related Information

- "DIMM Configuration Guidelines" on page 91
- "Half-Populated Configuration" on page 91
- "3/4-Populated Configuration" on page 93
- "One Processor Module Memory Configurations" on page 96
- "Two Processor Module Memory Configurations" on page 97
- "Install a DIMM" on page 102
- "Increase System Memory With Additional DIMMs" on page 104
- "Verify DIMM Functionality" on page 106

One Processor Module Memory Configurations

Total Amount of Memory	Processor Module 1	Processor Module 0
Balanced (Recommended) Configurations		
64 Gbytes	Processor filler module	• "Half-Populated Configuration" on page 91 • 4 Gbyte DIMMs in CMP 1 group • 4 Gbyte DIMMs in CMP 0 group
128 Gbytes	Processor filler module	• "Half-Populated Configuration" on page 91 • 8 Gbyte DIMMs in CMP 1 group • 8 Gbyte DIMMs in CMP 0 group
128 Gbytes	Processor filler module	• "Fully-Populated Configuration" on page 94 • 4 Gbyte DIMMs in CMP 1 group • 4 Gbyte DIMMs in CMP 0 group
256 Gbytes	Processor filler module	• "Fully-Populated Configuration" on page 94 • 8 Gbyte DIMMs in CMP 1 group • 8 Gbyte DIMMs in CMP 0 group

Total Amount of Memory	Processor Module 1	Processor Module 0
Other Configurations		
128 Gbytes	Processor filler module	• "3/4-Populated Configuration" on page 93 • 4 Gbyte DIMMs in CMP 1 group • 8 Gbyte DIMMs in CMP 0 group
192 Gbytes	Processor filler module	• "Fully-Populated Configuration" on page 94 • 4 Gbyte DIMMs in CMP 1 group • 8 Gbyte DIMMs in CMP 0 group

Related Information

- "DIMM Configuration Guidelines" on page 91
- "Half-Populated Configuration" on page 91
- "3/4-Populated Configuration" on page 93
- "Fully-Populated Configuration" on page 94
- "Two Processor Module Memory Configurations" on page 97
- "Install a DIMM" on page 102
- "Increase System Memory With Additional DIMMs" on page 104
- "Verify DIMM Functionality" on page 106

Two Processor Module Memory Configurations

Total Amount of Memory	Processor Module 1	Processor Module 0
Balanced (Recommended) Configurations		
128 Gbytes	• "Half-Populated Configuration" on page 91 • 4 Gbyte DIMMs in CMP 1 group • 4 Gbyte DIMMs in CMP 0 group	• "Half-Populated Configuration" on page 91 • 4 Gbyte DIMMs in CMP 1 group • 4 Gbyte DIMMs in CMP 0 group
256 Gbytes	• "Fully-Populated Configuration" on page 94 • 4 Gbyte DIMMs in CMP 1 group • 4 Gbyte DIMMs in CMP 0 group	• "Fully-Populated Configuration" on page 94 • 4 Gbyte DIMMs in CMP 1 group • 4 Gbyte DIMMs in CMP 0 group
256 Gbytes	• "Half-Populated Configuration" on page 91 • 8 Gbyte DIMMs in CMP 1 group • 8 Gbyte DIMMs in CMP 0 group	• "Half-Populated Configuration" on page 91 • 8 Gbyte DIMMs in CMP 1 group • 8 Gbyte DIMMs in CMP 0 group

Total Amount of Memory	Processor Module 1	Processor Module 0
512 Gbytes	• "Fully-Populated Configuration" on page 94 • 8 Gbyte DIMMs in CMP 1 group • 8 Gbyte DIMMs in CMP 0 group	• "Fully-Populated Configuration" on page 94 • 8 Gbyte DIMMs in CMP 1 group • 8 Gbyte DIMMs in CMP 0 group
Other Configurations		
192 Gbytes	• "Half-Populated Configuration" on page 91 • 4 Gbyte DIMMs in CMP 1 group • 4 Gbyte DIMMs in CMP 0 group	• "3/4-Populated Configuration" on page 93 • 4 Gbyte DIMMs in CMP 1 group • 8 Gbyte DIMMs in CMP 0 group
192 Gbytes	• "Half-Populated Configuration" on page 91 • 4 Gbyte DIMMs in CMP 1 group • 4 Gbyte DIMMs in CMP 0 group	• "Fully-Populated Configuration" on page 94 • 4 Gbyte DIMMs in CMP 1 group • 4 Gbyte DIMMs in CMP 0 group
256 Gbytes	• "Fully-Populated Configuration" on page 94 • 4 Gbyte DIMMs in CMP 1 group • 4 Gbyte DIMMs in CMP 0 group	• "Half-Populated Configuration" on page 91 • 8 Gbyte DIMMs in CMP 1 group • 8 Gbyte DIMMs in CMP 0 group
384 Gbytes	• "Fully-Populated Configuration" on page 94 • 4 Gbyte DIMMs in CMP 1 group • 4 Gbyte DIMMs in CMP 0 group	• "Fully-Populated Configuration" on page 94 • 8 Gbyte DIMMs in CMP 1 group • 8 Gbyte DIMMs in CMP 0 group
384 Gbytes	• "Half-Populated Configuration" on page 91 • 8 Gbyte DIMMs in CMP 1 group • 8 Gbyte DIMMs in CMP 0 group	• "Fully-Populated Configuration" on page 94 • 8 Gbyte DIMMs in CMP 1 group • 8 Gbyte DIMMs in CMP 0 group
448 Gbytes	• "Fully-Populated Configuration" on page 94 • 4 Gbyte DIMMs in CMP 1 group • 8 Gbyte DIMMs in CMP 0 group	• "Fully-Populated Configuration" on page 94 • 8 Gbyte DIMMs in CMP 1 group • 8 Gbyte DIMMs in CMP 0 group

Related Information

- "DIMM Configuration Guidelines" on page 91
- "Half-Populated Configuration" on page 91
- "3/4-Populated Configuration" on page 93
- "Fully-Populated Configuration" on page 94
- "One Processor Module Memory Configurations" on page 96
- "Install a DIMM" on page 102
- "Increase System Memory With Additional DIMMs" on page 104
- "Verify DIMM Functionality" on page 106

▼ Locate a Faulty DIMM Using the DIMM Fault Remind Button

1. **Remove the processor module with the faulty DIMM from the server and remove the cover from the processor module.**

   See "Remove a Processor Module" on page 79.

2. **Locate the DIMM Fault Remind button on the motherboard.**

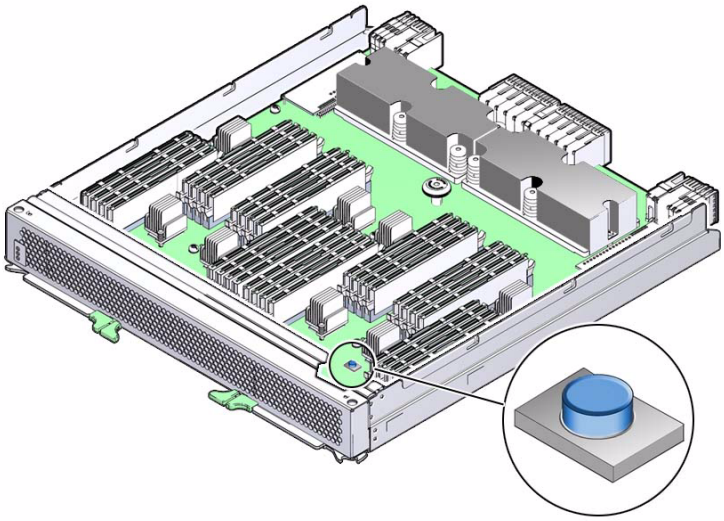

3. **Verify that the DIMM Fault Remind Power LED next to the button is lit.**

   A lit DIMM Fault Remind Power LED indicates that there is power available to light the faulty DIMM LED once you have pressed the DIMM Fault Remind button.

4. **Press the DIMM Fault Remind button on the motherboard.**

   This will cause DIMM Fault LED associated with the faulty DIMM to light for a few minutes.

5. **Note the DIMM next to the illuminated DIMM Fault LED.**

6. **Ensure that all other DIMMs are seated correctly in their slots.**

Related Information

- "Locate a Faulty DIMM Using the show faulty Command" on page 100

▼ Locate a Faulty DIMM Using the `show faulty` Command

The ILOM `show faulty` command displays current system faults, including DIMM failures.

- **Enter** `show faulty` **at the** `->` **prompt.**

```
-> show faulty
Target                | Property                | Value
----------------------+-------------------------+-------------------------------
/SP/faultmgmt/0       | fru                     | /SYS/PM0/CMP0/BOB1/CH0/D0
/SP/faultmgmt/0       | timestamp               | Dec 21 16:40:56
/SP/faultmgmt/0/      | timestamp               | Dec 21 16:40:56 faults/0
/SP/faultmgmt/0/      | sp_detected_fault       | /SYS/PM0/CMP0/BOB1/CH0/D0
faults/0              |                         | Forced fail(POST)
```

Related Information

- "Locate a Faulty DIMM Using the DIMM Fault Remind Button" on page 99

▼ Remove a DIMM

A DIMM is a cold-service component that can be replaced by a customer.

Before beginning this procedure, ensure that you are familiar with the cautions and safety instructions described in "Safety Information" on page 59.

Caution – Do not leave DIMM slots empty. You must install filler panels in all empty DIMM slots.

1. **Take the necessary ESD precautions.**

   See "Prevent ESD Damage" on page 69.

2. **Remove the processor module with the faulty DIMM from the server and remove the cover from the processor module, if you have not already done so.**

   See "Remove a Processor Module" on page 79.

3. **Locate the DIMMs that need to be replaced.**

   See "Locate a Faulty DIMM Using the DIMM Fault Remind Button" on page 99 or "Locate a Faulty DIMM Using the show faulty Command" on page 100.

4. **Push down on the ejector tabs on each side of the DIMM until the DIMM is released.**

Caution – DIMMs and heat sinks on the motherboard might be hot.

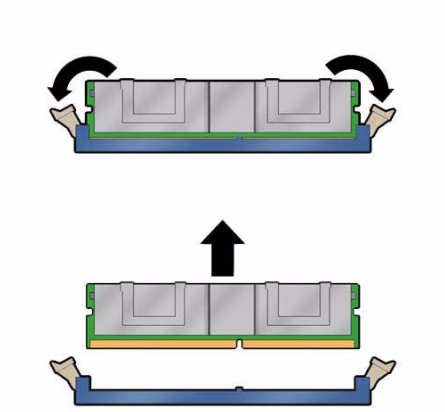

5. **Grasp the top corners of the faulty DIMM and lift it out of its slot.**

6. **Place the DIMM on an antistatic mat.**

7. **Repeat** Step 4 **through** Step 6 **for any other DIMMs you intend to remove.**

8. **Determine if you will be installing replacement DIMMs at this time.**

   - If you will be installing replacement DIMMs at this time, go to "Install a DIMM" on page 102.
   - If you will not be installing replacement DIMMs at this time, follow these procedures to reinsert the processor module back into the server:

     a. **Install filler panels in the empty DIMM slots.**

Caution – Do not leave DIMM slots empty. You must install filler panels in all empty DIMM slots.

---

     b. **Place the cover back onto the processor module and insert the processor module back into its slot in the server.**

     See "Install a Processor Module" on page 83.

Related Information

- "Memory Fault Handling Overview" on page 89
- "DIMM Configuration Guidelines" on page 91
- "Locate a Faulty DIMM Using the DIMM Fault Remind Button" on page 99
- "Locate a Faulty DIMM Using the show faulty Command" on page 100
- "Install a DIMM" on page 102
- "Verify DIMM Functionality" on page 106

▼ Install a DIMM

Before beginning this procedure, ensure that you are familiar with the information provided in these topics:

- "Safety Information" on page 59
- "DIMM Configuration Guidelines" on page 91

1. **Take the necessary ESD precautions.**

   See "Prevent ESD Damage" on page 69.

2. **Remove the processor module from the server and remove the cover from the processor module, if you have not already done so:**

   See "Remove a Processor Module" on page 79.

3. **Unpack the replacement DIMMs and place them on an antistatic mat.**

4. **Ensure that the ejector tabs on the connector that will receive the DIMM are in the open position.**

5. **Align the DIMM notch with the key in the connector.**

Caution – Ensure that the orientation is correct. The DIMM might be damaged if the orientation is reversed.

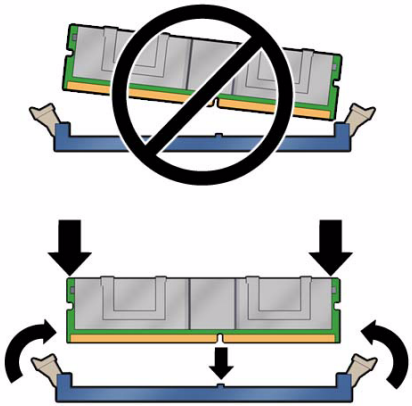

6. **Push the DIMM into the connector until the ejector tabs lock the DIMM in place.**

   If the DIMM does not easily seat into the connector, check the DIMM's orientation.

7. **Repeat** Step 4 **through** Step 6 **until all new DIMMs are installed.**

8. **Place the cover back onto the processor module and insert the processor module back into its slot in the server.**

   See "Install a Processor Module" on page 83.

Related Information

- "Memory Fault Handling Overview" on page 89
- "DIMM Configuration Guidelines" on page 91
- "Half-Populated Configuration" on page 91
- "3/4-Populated Configuration" on page 93
- "Fully-Populated Configuration" on page 94
- "One Processor Module Memory Configurations" on page 96
- "Two Processor Module Memory Configurations" on page 97
- "Remove a DIMM" on page 100
- "Verify DIMM Functionality" on page 106

▼ Increase System Memory With Additional DIMMs

Before performing a memory upgrade procedure, become familiar with the memory configuration guidelines described in "DIMM Configuration Guidelines" on page 91.

1. **Unpack the new DIMMs and place them on an antistatic mat.**
2. **Remove the processor module from the server and remove the cover from the processor module, if you have not already done so.**

   See "Remove a Processor Module" on page 79.
3. **At a DIMM slot that is to be upgraded, open the ejector tabs and remove the filler panel.**

   Do not dispose of the filler panel. You may want to reuse it if any DIMMs are removed at another time.
4. **Ensure that the ejector tabs on the connector that will receive the DIMM are in the open position.**
5. **Align the DIMM notch with the key in the connector.**

Caution – Ensure that the orientation is correct. The DIMM might be damaged if the orientation is reversed.

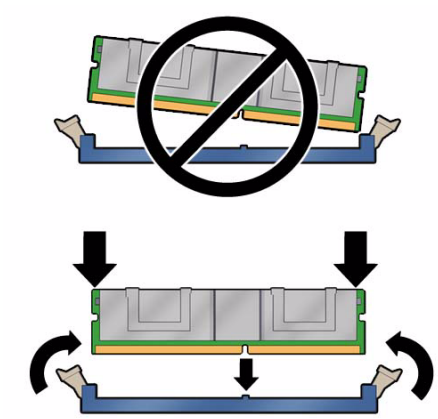

6. **Push the DIMM into the connector until the ejector tabs lock the DIMM in place.**

   If the DIMM does not easily seat into the connector, check the DIMM's orientation.

7. **Repeat** Step 3 **through** Step 6 **until all DIMMs are installed.**

8. **Place the cover back onto the processor module and insert the processor module back into its slot in the server.**

   See "Install a Processor Module" on page 83

9. **Perform the following steps to verify that there are no faults:**

   a. **Set the virtual keyswitch to** `diag` **so that POST will run in Service mode.**

```
-> set /SYS keyswitch_state=diag
Set 'keyswitch_state' to 'Diag'
```

   b. **Power cycle the system.**

```
-> stop /SYS
Are you sure you want to stop /SYS (y/n)? y
Stopping /SYS
-> start /SYS
Are you sure you want to start /SYS (y/n)? y
Starting /SYS
```

Note – The server takes about one minute to power off. The ILOM console does not indicate when the system is actually powered off.

---

   c. **Switch to the system console to view POST output.**

```
-> start /HOST/console
```

   Watch the POST output for possible fault messages. The following output indicates that POST did not detect any faults:

```
...
0:0:0>INFO:
0:0:0>    POST Passed all devices.
0:0:0>POST:    Return to VBSC.
0:0:0>Master set ACK for vbsc runpost command and spin...
```

Note – The system might boot automatically at this point. If so, go directly to Step e. If it remains at the `ok` prompt, go to Step d.

---

d. **If the system remains at the ok prompt, type** `boot`**.**

e. **Return the virtual keyswitch to Normal mode.**

```
-> set /SYS keyswitch_state=Normal
Set 'ketswitch_state' to 'Normal'
```

Related Information

- "Memory Fault Handling Overview" on page 89
- "DIMM Configuration Guidelines" on page 91
- "Half-Populated Configuration" on page 91
- "3/4-Populated Configuration" on page 93
- "Fully-Populated Configuration" on page 94
- "One Processor Module Memory Configurations" on page 96
- "Two Processor Module Memory Configurations" on page 97
- "Remove a DIMM" on page 100
- "Install a DIMM" on page 102
- "Verify DIMM Functionality" on page 106

▼ Verify DIMM Functionality

1. **Access the ILOM** `->` **prompt.**

   Refer to the *SPARC T3 Series Servers Administration Guide* for instructions.

2. **Use the** `show faulty` **command to determine how to clear the fault.**

   - If `show faulty` indicates a POST-detected fault, go to Step 3.
   - If `show faulty` output displays a UUID, which indicates a host-detected fault, skip Step 3 and go directly to Step 4.

3. **Use the** `set` **command to enable the DIMM that was disabled by POST.**

   In most cases, replacement of a faulty DIMM is detected when the service processor is power cycled. In those cases, the fault is automatically cleared from the system. If `show faulty` still displays the fault, the `set` command will clear it.

```
-> set /SYS/PM0/CMP0/BOB0/CH0/D0 component_state=Enabled
```

4. **For a host-detected fault, perform the following steps to verify the new DIMM:**

a. **Set the virtual keyswitch to** `diag` **so that POST will run in Service mode.**

```
-> set /SYS keyswitch_state=diag
Set 'keyswitch_state' to 'Diag'
```

b. **Power cycle the system.**

```
-> stop /SYS
Are you sure you want to stop /SYS (y/n)? y
Stopping /SYS
-> start /SYS
Are you sure you want to start /SYS (y/n)? y
Starting /SYS
```

Note – Use the `show /HOST` command to determine when the host has been powered off. The console will display `status=Powered Off`. Allow approximately one minute before running this command.

---

c. **Switch to the system console to view POST output.**

Watch the POST output for possible fault messages. The following output indicates that POST did not detect any faults:

```
-> start /HOST/console
...
0:0:0>INFO:
0:0:0>    POST Passed all devices.
0:0:0>POST:    Return to VBSC.
0:0:0>Master set ACK for vbsc runpost command and spin...
```

Note – The system might boot automatically at this point. If so, go directly to Step e. If it remains at the `ok` prompt go to Step d.

---

d. **If the system remains at the ok prompt, type** `boot`**.**

e. **Return the virtual keyswitch to Normal mode.**

```
-> set /SYS keyswitch_state=Normal
Set 'ketswitch_state' to 'Normal'
```

f. **Switch to the system console and type the Oracle Solaris OS** `fmadm faulty` **command.**

```
# fmadm faulty
```

If any faults are reported, refer to the diagnostics instructions described in "ILOM Troubleshooting Overview" on page 22.

5. **Switch to the ILOM command shell.**

6. **Run the** `show faulty` **command.**

```
-> show faulty
Target                | Property                | Value
----------------------+-------------------------+-------------------------------
/SP/faultmgmt/0       | fru                     | /SYS/PM0/CMP0/BOB0/CH1/D0
/SP/faultmgmt/0       | timestamp               | Dec 14 22:43:59
/SP/faultmgmt/0/      | sunw-msg-id             | SUN4V-8000-DX
faults/0              |                         |
/SP/faultmgmt/0/      | uuid                    | 3aa7c854-9667-e176-efe5-e487e520
faults/0              |                         | 7a8a
/SP/faultmgmt/0/      | timestamp               | Dec 14 22:43:59
faults/0              |                         |
```

If the `show faulty` command reports a fault with a UUID, go on to Step 7. If `show faulty` does *not* report a fault with a UUID, you are done with the verification process.

7. **Switch to the system console and type the** `fmadm repair` **command with the UUID.**

   Use the same UUID that was displayed from the output of the ILOM `show faulty` command.

```
# fmadm repair 3aa7c854-9667-e176-efe5-e487e520
```

Related Information

- "Memory Fault Handling Overview" on page 89
- "DIMM Configuration Guidelines" on page 91
- "Remove a DIMM" on page 100
- "Install a DIMM" on page 102
- "Increase System Memory With Additional DIMMs" on page 104

Servicing Hard Drives

These topics describe service procedures for the hard drives in the server.

Hard Drive Hot-Pluggable Capabilities

The hard drives in the server are hot-pluggable, meaning that the drives can be removed and inserted while the server is powered on.

Depending on the configuration of the data on a particular drive, the drive might also be removable while the server is online. However, to hot-plug a drive while the server is online you must take the drive offline before you can safely remove it. Taking a drive offline prevents any applications from accessing it, and removes the logical software links to it.

The following situations inhibit your ability to hot-plug a drive:

- If the drive contains the operating system, and the operating system is not mirrored on another drive.
- If the drive cannot be logically isolated from the online operations of the server.

If either of these conditions apply to the drive being serviced, you must take the server offline (shut down the operating system) before you replace the drive.

Related Information

- "Hard Drive Configuration Reference" on page 110
- "Hard Drive LEDs" on page 111
- "Locate a Faulty Hard Drive" on page 112
- "Remove a Hard Drive" on page 112
- "Install a Hard Drive" on page 115
- "Verify Hard Drive Functionality" on page 116

Hard Drive Configuration Reference

This topic provides configuration information for the hard drives.

You can install a mix of hard disk drives and solid state drives. The server requires at least one hard drive to be installed and operational.

FIGURE: Hard Disk Drive Reference

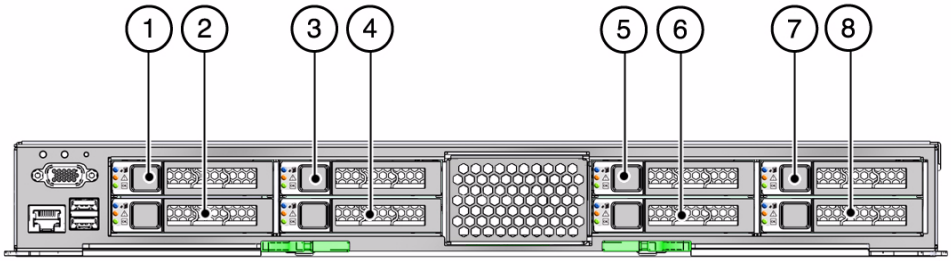

Figure Legend

1	Drive 1	**5**	Drive 5
2	Drive 0	**6**	Drive 4
3	Drive 3	**7**	Drive 7
4	Drive 2	**8**	Drive 6

Related Information

- "Hard Drive Hot-Pluggable Capabilities" on page 109
- "Hard Drive LEDs" on page 111
- "Locate a Faulty Hard Drive" on page 112

- "Remove a Hard Drive" on page 112
- "Install a Hard Drive" on page 115
- "Verify Hard Drive Functionality" on page 116

Hard Drive LEDs

The status of each drive is represented by the same three LEDs.

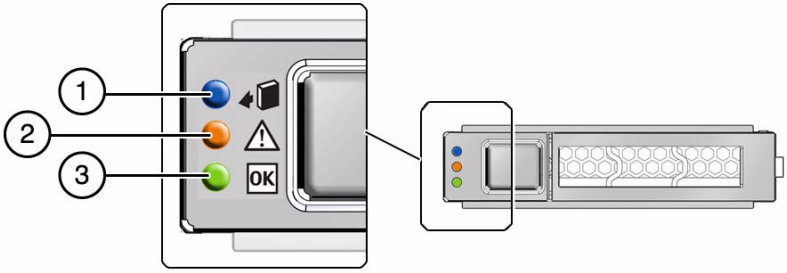

TABLE: Status LEDs for Hard Drives

No.	LED	Icon	Description
1	Ready to Remove (blue)		Indicates that a drive can be removed during a hot-plug operation.
2	Service Required (amber)		Indicates that the drive has experienced a fault condition.
3	OK/Activity (green)	OK	Indicates the drive's availability for use. • On – Read or write activity is in progress. • Off – Drive is idle and available for use.

Related Information

- "Hard Drive Hot-Pluggable Capabilities" on page 109
- "Hard Drive Configuration Reference" on page 110
- "Locate a Faulty Hard Drive" on page 112
- "Remove a Hard Drive" on page 112

- "Install a Hard Drive" on page 115
- "Verify Hard Drive Functionality" on page 116

▼ Locate a Faulty Hard Drive

The following LEDs are lit when a hard drive fault is detected:

- System Service Required LEDs on the front panel and rear I/O module
- Service Required LED on the faulty drive

1. **Determine if the System Service Required LEDs are lit on the front panel or the rear I/O module.**

   See "Interpreting Diagnostic LEDs" on page 16.

2. **From the front of the server, check the drive LEDs to identify which drive needs to be replaced.**

   See "Hard Drive LEDs" on page 111. The amber Service Required LED will be lit on the drive that needs to be replaced.

3. **Remove the faulty drive.**

   See "Remove a Hard Drive" on page 112.

Related Information

- "Hard Drive Hot-Pluggable Capabilities" on page 109
- "Hard Drive Configuration Reference" on page 110
- "Hard Drive LEDs" on page 111
- "Remove a Hard Drive" on page 112
- "Install a Hard Drive" on page 115
- "Verify Hard Drive Functionality" on page 116

▼ Remove a Hard Drive

A hard drive is a hot-service component that can be replaced by a customer.

1. **Locate the drive in the server that you want to remove.**
   - See "Front Components" on page 2 for the locations of the drives in the server.

- See "Locate a Faulty Hard Drive" on page 112 to locate a faulty drive.

2. **Determine if you need to shut down the OS to replace the drive, and perform one of the following actions:**
   - If the drive cannot be taken offline without shutting down the OS, follow instructions in "Power Off the Server (Service Processor Command)" on page 67 then go to Step 4.
   - If the drive can be taken offline without shutting down the OS, go to Step 3.

3. **Take the drive offline:**

   a. **At the Oracle Solaris prompt, type the `cfgadm -al` command to list all drives in the device tree, including drives that are not configured:**

```
# cfgadm -al
```

   This command lists dynamically reconfigurable hardware resources and shows their operational status. In this case, look for the status of the drive you plan to remove. This information is listed in the Occupant column.

   Example:

```
Ap_id                      Type         Receptacle   Occupant        Condition
...
c2                         scsi-sas     connected    configured      unknown
c2::w5000cca00a76d1f5,0    disk-path    connected    configured      unknown
c3                         scsi-sas     connected    configured      unknown
c3::w5000cca00a772bd1,0    disk-path    connected    configured      unknown
c4                         scsi-sas     connected    configured      unknown
c4::w5000cca00a59b0a9,0    disk-path    connected    configured      unknown
...
```

   You must unconfigure any drive whose status is listed as configured, as described in Step b.

   b. **Unconfigure the drive using the `cfgadm -c unconfigure` command.**

   Example:

```
# cfgadm -c unconfigure c2::w5000cca00a76d1f5,0
```

   Replace `c2::w5000cca00a76d1f5,0` with the drive name that applies to your situation.

   c. **Verify that the drive's blue Ready-to-Remove LED is lit.**

4. **Press the drive release button to unlock the drive and pull on the latch to remove the drive.**

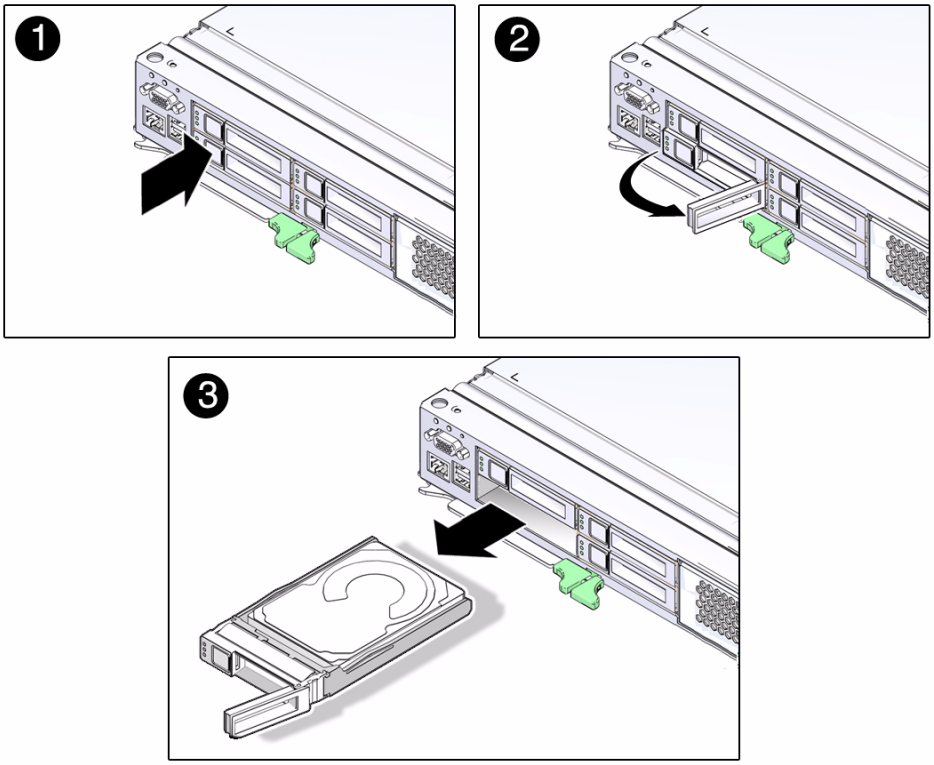

Caution – The latch is not an ejector. Do not force the latch too far to the right. Doing so can damage the latch.

5. **Install the replacement drive or a filler tray.**

   See "Install a Hard Drive" on page 115.

Related Information

- "Hard Drive Hot-Pluggable Capabilities" on page 109
- "Hard Drive Configuration Reference" on page 110
- "Hard Drive LEDs" on page 111
- "Locate a Faulty Hard Drive" on page 112
- "Install a Hard Drive" on page 115
- "Verify Hard Drive Functionality" on page 116

▼ Install a Hard Drive

1. **Align the replacement drive to the drive slot and slide the drive in until it is seated.**

   Drives are physically addressed according to the slot in which they are installed. If you are replacing a drive, install the replacement drive in the same slot as the drive that was removed. See "Hard Drive Configuration Reference" on page 110 for drive slot information.

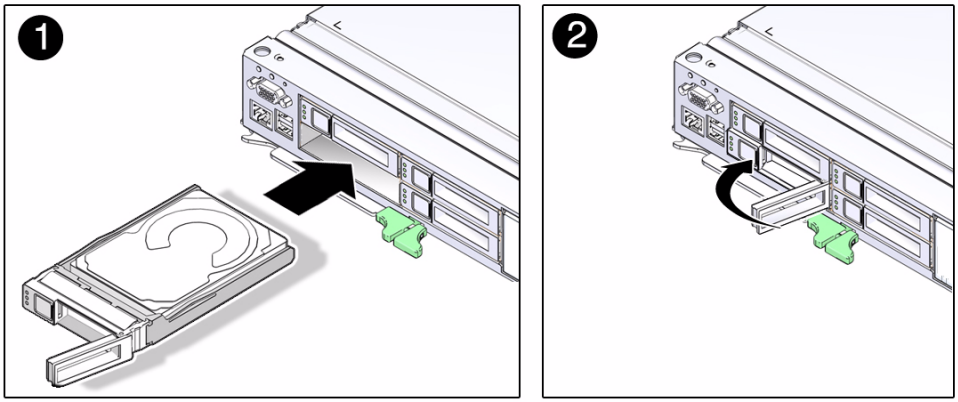

2. **Close the latch to lock the drive in place.**

3. **Verify the drive functionality.**

   See "Verify Hard Drive Functionality" on page 116.

Related Information

- "Hard Drive Hot-Pluggable Capabilities" on page 109
- "Hard Drive Configuration Reference" on page 110
- "Hard Drive LEDs" on page 111
- "Locate a Faulty Hard Drive" on page 112
- "Remove a Hard Drive" on page 112
- "Verify Hard Drive Functionality" on page 116

▼ Verify Hard Drive Functionality

1. **Determine if you replaced or installed a hard drive in a running system or not.**
   - If you replaced or installed a hard drive in a system that is running (if you hot-plugged the hard drive), then no further action is necessary. The Solaris OS will auto-configure your hard drive.
   - If you replaced or installed a hard drive in a powered-down system, then continue with these procedures to configure the hard drive.

2. **If the OS is shut down, and the drive you replaced was not the boot device, boot the OS.**

   Depending on the nature of the replaced drive, you might need to perform administrative tasks to reinstall software before the server can boot. Refer to the Oracle Solaris OS administration documentation for more information.

3. **At the Oracle Solaris prompt, type the `cfgadm -al` command to list all drives in the device tree, including any drives that are not configured:**

```
# cfgadm -al
```

   This command helps you identify the drive you installed. Example:

```
Ap_id                       Type         Receptacle   Occupant        Condition
...
c2                          scsi-sas     connected    configured      unknown
c2::w5000cca00a76d1f5,0     disk-path    connected    configured      unknown
c3                          scsi-sas     connected    configured      unknown
c3::sd2                     disk-path    connected    unconfigured    unknown
c4                          scsi-sas     connected    configured      unknown
c4::w5000cca00a59b0a9,0     disk-path    connected    configured      unknown
...
```

4. **Configure the drive using the `cfgadm -c configure` command.**

   Example:

```
# cfgadm -c configure c2::w5000cca00a76d1f5,0
```

   Replace `c2::w5000cca00a76d1f5,0` with the drive name for your configuration.

5. **Verify that the blue Ready-to-Remove LED is no longer lit on the drive that you installed.**

   See "Hard Drive LEDs" on page 111.

6. **At the Oracle Solaris prompt, type the `cfgadm -al` command to list all drives in the device tree, including any drives that are not configured:**

```
# cfgadm -al
```

   The replacement drive is now listed as configured. Example:

```
Ap_id                        Type         Receptacle   Occupant        Condition
...
c2                           scsi-sas     connected    configured      unknown
c2::w5000cca00a76d1f5,0      disk-path    connected    configured      unknown
c3                           scsi-sas     connected    configured      unknown
c3::w5000cca00a772bd1,0      disk-path    connected    configured      unknown
c4                           scsi-sas     connected    configured      unknown
c4::w5000cca00a59b0a9,0      disk-path    connected    configured      unknown
...
```

7. **Perform one of the following tasks based on your verification results:**
   - If the previous steps did not verify the drive, see "Diagnostics Process" on page 12.
   - If the previous steps indicate that the drive is functioning properly, perform the tasks required to configure the drive. These tasks are covered in the Oracle Solaris OS administration documentation.

   For additional drive verification, you can run the SunVTS software. Refer to the SunVTS documentation for details.

Related Information

- "Hard Drive Hot-Pluggable Capabilities" on page 109
- "Hard Drive Configuration Reference" on page 110
- "Hard Drive LEDs" on page 111
- "Locate a Faulty Hard Drive" on page 112
- "Remove a Hard Drive" on page 112
- "Install a Hard Drive" on page 115

Servicing Power Supplies

These topics describe service procedures for the power supplies in the server.

Power Supply Overview

The server must have at least two functioning power supplies to operate correctly. There are no restrictions into which slots the power supplies have to be installed, so if you have only two power supplies, they can be installed in any of the four power supply slots. If you need to replace a power supply and your server has only two power supplies installed, you must power down the server before you can replace the power supply.

Related Information

- "Power Supply and AC Power Connector Configuration Reference" on page 120
- "Power Supply and AC Power Connector LEDs" on page 122
- "Locate a Faulty Power Supply" on page 123
- "Remove a Power Supply" on page 124
- "Install a Power Supply" on page 126
- "Verify Power Supply Functionality" on page 129

Power Supply and AC Power Connector Configuration Reference

FIGURE: Power Supply Configuration Reference (Front of Server)

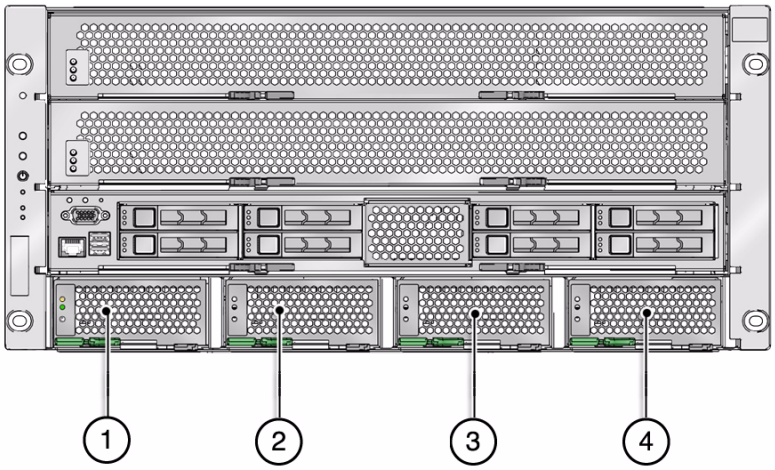

Figure Legend

1	Power supply unit 0
2	Power supply unit 1
3	Power supply unit 2
4	Power supply unit 3

FIGURE: AC Connector Configuration Reference (Rear of Server)

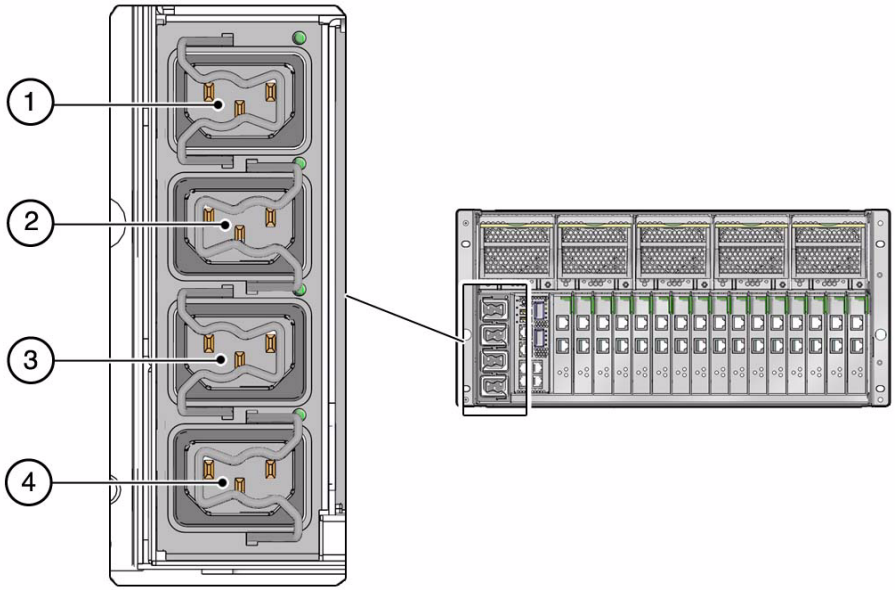

Figure Legend

1	AC connector for power supply unit 3
2	AC connector for power supply unit 2
3	AC connector for power supply unit 1
4	AC connector for power supply unit 0

Related Information

- "Power Supply Overview" on page 119
- "Power Supply and AC Power Connector LEDs" on page 122
- "Locate a Faulty Power Supply" on page 123
- "Remove a Power Supply" on page 124
- "Install a Power Supply" on page 126
- "Verify Power Supply Functionality" on page 129

Power Supply and AC Power Connector LEDs

Each power supply is provided with a set of three LEDs, which are located at the front of the system.

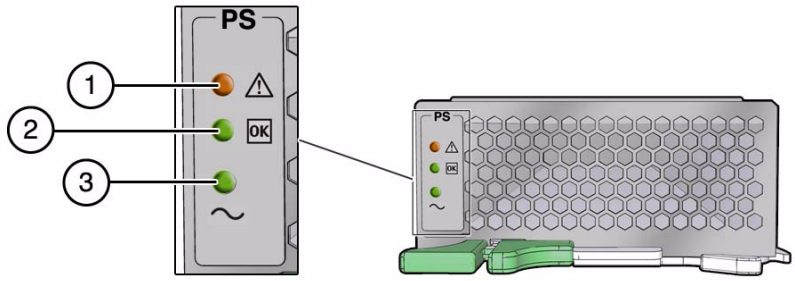

TABLE: Power Supply Status LEDs

No.	LED	Icon	Description
1	Fault (amber)	⚠	Lights when the power supply is faulty. **Note -** The front and rear panel Service Required LEDs are also lit if the system detects a power supply fault.
2	OK (green)	OK	Lights when the power supply DC voltage from the PSU to the server is within tolerance.
3	AC Present (green)	~AC	Lights when AC voltage is applied to the power supply.

Note – If a power supply fails and you do not have a replacement available, leave the failed power supply installed to ensure proper airflow in the server.

Each AC power connector has a single LED.

FIGURE: AC Power Connector LED

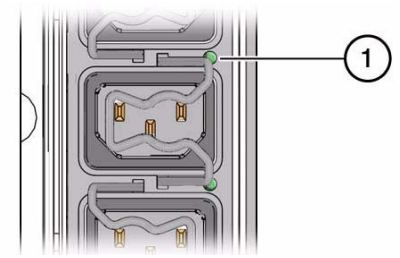

TABLE: AC Power Connector LED

No.	LED	Description
1	AC Present (green)	Lights to indicate that the power cord connected to this system AC power connector is also plugged into an AC wall socket and is supplying power to this AC power connector. Note that this LED will light only after a minimum of two power cords are supplying power to the AC power connectors.

Related Information

- "Power Supply Overview" on page 119
- "Power Supply and AC Power Connector Configuration Reference" on page 120
- "Locate a Faulty Power Supply" on page 123
- "Remove a Power Supply" on page 124
- "Install a Power Supply" on page 126
- "Verify Power Supply Functionality" on page 129

▼ Locate a Faulty Power Supply

The following LEDs are lit when a power supply fault is detected:

- System Service Required LEDs on the front panel and rear I/O module
- Fault LED on the faulty power supply

1. **Determine if the System Service Required LEDs are lit on the front panel or the rear I/O module.**

   See "Interpreting Diagnostic LEDs" on page 16.

2. **From the front of the server, check the power supply fault LEDs to identify which power supply needs to be replaced.**

   See "Power Supply and AC Power Connector LEDs" on page 122. The amber Service Required LED will be lit on the power supply that needs to be replaced.

3. **Remove the faulty power supply.**

   See "Remove a Power Supply" on page 124.

Related Information

- "Power Supply Overview" on page 119
- "Power Supply and AC Power Connector Configuration Reference" on page 120
- "Power Supply and AC Power Connector LEDs" on page 122
- "Remove a Power Supply" on page 124
- "Install a Power Supply" on page 126
- "Verify Power Supply Functionality" on page 129

▼ Remove a Power Supply

The power supply is a hot-service component that can be replaced by a customer.

1. **Locate the power supply in the server that you want to remove.**
   - See "Front Components" on page 2 for the locations of the power supplies in the server.
   - See "Locate a Faulty Power Supply" on page 123 to locate a faulty power supply.

2. **Determine if you can hot-swap the power supply:**
   - If there are at least three power supplies installed, you can hot-swap the faulty power supply without shutting down the server. Go to Step 6.
   - If there are two or fewer power supplies installed, you must shut down the server before you can remove the power supply. Go to Step 3

3. **Power off the server.**

   See "Removing Power From the System" on page 66

4. **Go to the rear of the server and locate the AC power connector at the rear of the server that supplies power to the faulty power supply.**

   See "Power Supply and AC Power Connector Configuration Reference" on page 120.

5. **Disconnect the power cord from the AC power connector that is associated with the power supply that will be replaced.**

6. **Go to the front of the server and, on the power supply to be removed, squeeze the release latches together, then pull the extraction lever toward you to disengage the power supply from the server.**

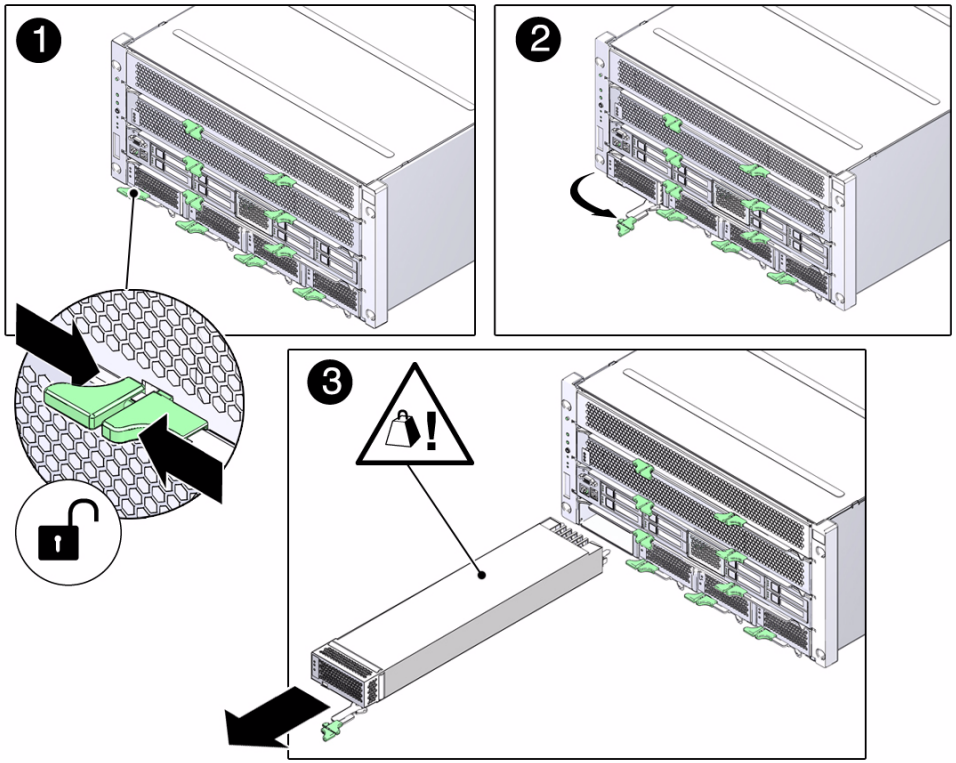

7. **Pull the power supply out of the server.**

8. **Install the replacement power supply.**

   See "Install a Power Supply" on page 126.

Related Information

- "Power Supply Overview" on page 119
- "Power Supply and AC Power Connector Configuration Reference" on page 120
- "Power Supply and AC Power Connector LEDs" on page 122
- "Locate a Faulty Power Supply" on page 123
- "Install a Power Supply" on page 126
- "Verify Power Supply Functionality" on page 129

▼ Install a Power Supply

1. **Align the replacement power supply with the empty power supply chassis bay.**

   Verify that the extraction lever on the power supply is on the right side of the power supply and that the power supply is oriented as shown in the following figure.

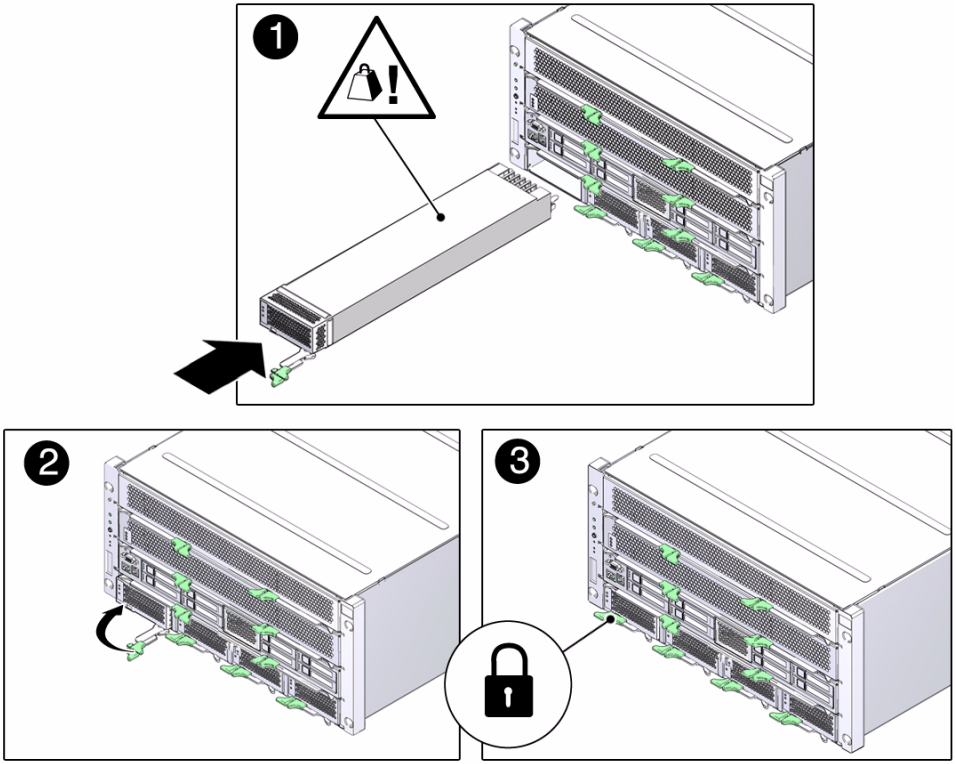

2. **Slide the power supply into the chassis.**

3. **Press the lever against the power supply to fully seat the power supply in the server.**

4. **If you disconnected the power cord for the power supply (if you had to cold-service the power supply), go to the rear of the server and plug the power cord into the AC connector that is associated with the power supply that you just inserted.**

   As soon as power is applied to the server, standby power initializes the service processor. Depending on the server's OpenBoot PROM settings, the host server might automatically boot, or you might need to boot it manually.

   The following figures show the locations of the power supplies at the front of the server and the corresponding AC power connectors at the rear of the server.

FIGURE: Locating the Power Supplies at the Front of the Server

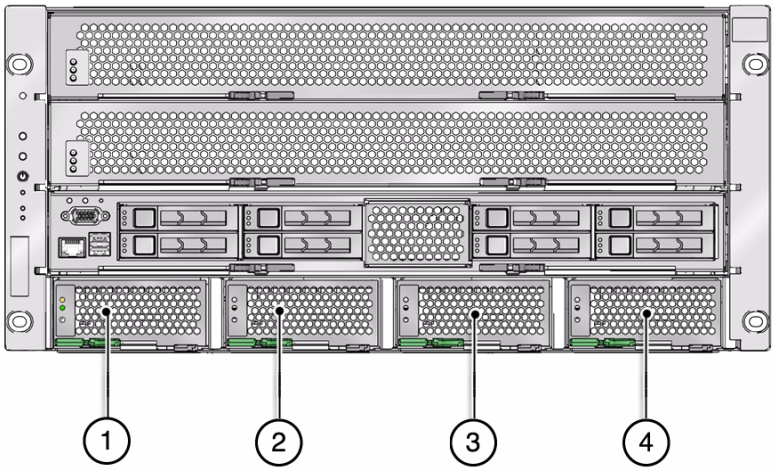

Figure Legend

1	Power supply unit 0
2	Power supply unit 1
3	Power supply unit 2
4	Power supply unit 3

FIGURE: Locating the AC Connectors at the Rear of the Server

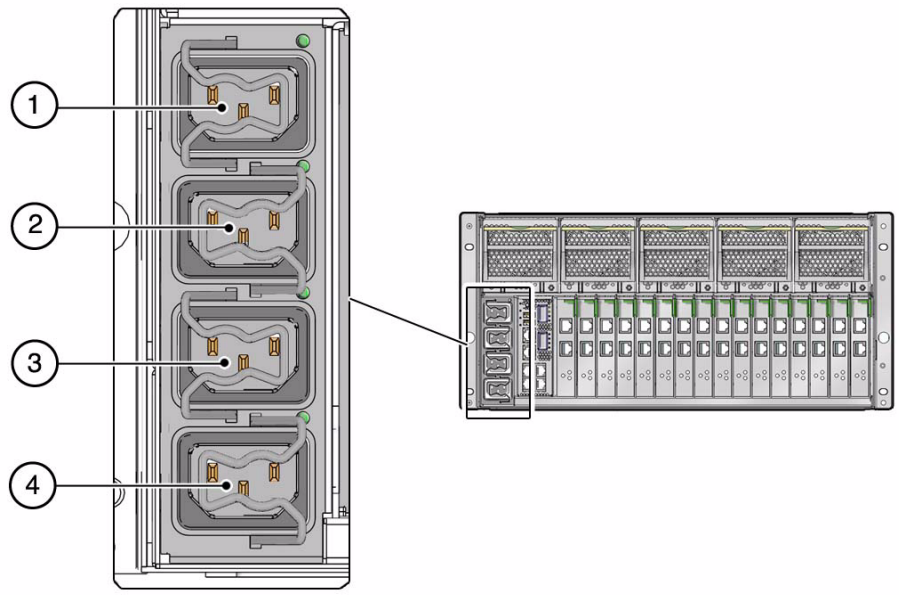

Figure Legend

1	AC connector for power supply unit 3
2	AC connector for power supply unit 2
3	AC connector for power supply unit 1
4	AC connector for power supply unit 0

5. **Verify the power supply functionality.**

   See "Verify Power Supply Functionality" on page 129.

Related Information

- "Power Supply Overview" on page 119
- "Power Supply and AC Power Connector Configuration Reference" on page 120
- "Power Supply and AC Power Connector LEDs" on page 122
- "Locate a Faulty Power Supply" on page 123
- "Remove a Power Supply" on page 124
- "Verify Power Supply Functionality" on page 129

▼ Verify Power Supply Functionality

1. **Verify that the power supply Power OK and AC Present LEDs are lit, and that the Fault LED is not lit.**

   See "Power Supply and AC Power Connector LEDs" on page 122.

2. **Verify that the front and rear Service Required LEDs are not lit.**

   See "Interpreting Diagnostic LEDs" on page 16.

3. **Perform one of the following tasks based on your verification results:**
   - If the previous steps did not clear the fault, see "Diagnostics Process" on page 12.
   - If Step 1 and Step 2 indicate that no faults have been detected, then the power supply has been replaced successfully. No further action is required.

Related Information

- "Power Supply Overview" on page 119
- "Power Supply and AC Power Connector Configuration Reference" on page 120
- "Power Supply and AC Power Connector LEDs" on page 122
- "Locate a Faulty Power Supply" on page 123
- "Remove a Power Supply" on page 124
- "Install a Power Supply" on page 126

Servicing RAID Expansion Modules

These topics describe service procedures for the RAID expansion modules in the server.

▼ Remove the RAID Expansion Module

The RAID expansion module is a cold-service component that can be replaced by a customer.

1. **Remove the main module from the server.**

   See "Remove the Main Module" on page 70.

2. **Take the necessary ESD precautions.**

   See "Prevent ESD Damage" on page 69.

3. **Locate the RAID expansion module that you want to replace on the main module.**

   See "Main Module Components" on page 3.

4. **Lift up the extraction lever to unseat the RAID expansion module.**

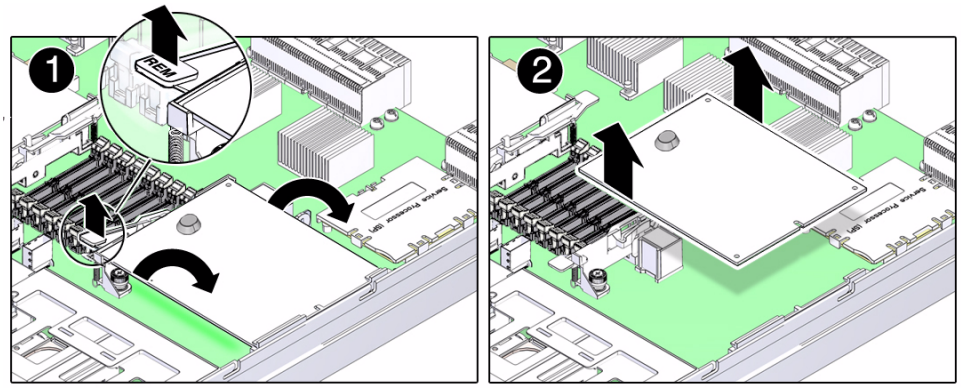

5. **Grasp the side of the RAID expansion module closest to the lever and lift it up.**
6. **Pull the RAID expansion module away from the main module.**

Related Information

- "Install the RAID Expansion Module" on page 132

▼ Install the RAID Expansion Module

1. **Orient the RAID expansion module into position over the slot, with the rubber press point side closest to the lever.**
2. **Slide one side of the RAID expansion module under the plastic lip in the module holder.**

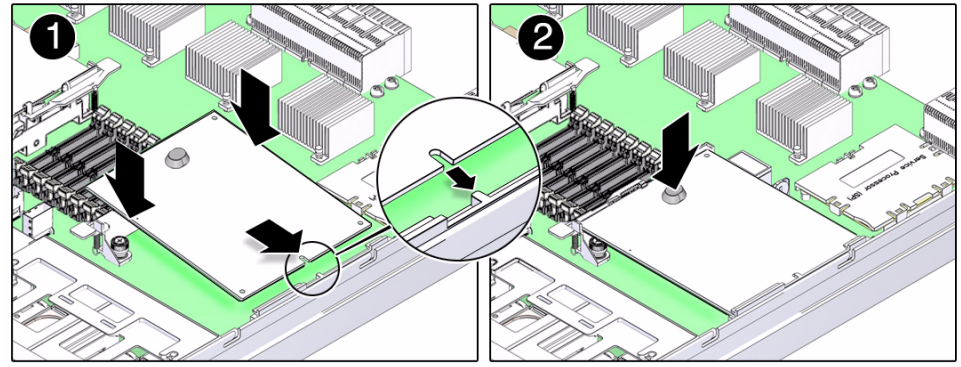

3. **Lower the other side of the RAID expansion module down, and then press on the rubber press point to seat the module into the slot.**

   The lever should lower itself down into position when the module is fully seated.

4. **Install the main module back into the server.**

   See "Install the Main Module" on page 72.

5. **Determine if you originally had RAID volumes set up on your system before you replaced the RAID expansion module.**

   - If you did not originally have RAID volumes set up on your system, you do not have to perform any other procedures in this topic.
   - If you did have RAID volumes set up on your system, continue to Step 6 to activate those RAID volumes again after replacing the RAID expansion module.

6. **Disable auto-boot in OBP and enter the OBP environment after you have powered the server back on.**

7. **At the Oracle Solaris OBP prompt, use the `show-devs` command to list the device paths on the server:**

```
ok show-devs
...
/pci@700/pci@1/pci@0/pci@0/@0
...
/pci@400/pci@1/pci@0/pci@0/@0
...
```

   You can also use the `devalias` command to locate device paths specific to your server:

```
ok devalias
...
scsi1                    /pci@700/pci@1/pci@0/pci@0/@0
...
scsi0                    /pci@400/pci@1/pci@0/pci@0/@0
...
```

8. **Use the `select` command to choose the RAID expansion module that you just replaced:**

```
ok select rem
```

   where *rem* is either the full device path name (such as `/pci@700/pci@1/pci@0/pci@0/@0`) or the alias name (such as `scsi1`).

9. **List all connected logical RAID volumes to determine which volumes are in an inactive state:**

```
ok show-volumes
```

10. **For every RAID volume that is listed as inactive, enter the following command to activate those volumes:**

```
ok inactive_volume activate-volume
```

where *inactive_volume* is the name of the RAID volume that you are activating.

Note – For more information on configuring hardware RAID on the server, refer to the *SPARC T3 Series Servers Administration Guide*.

Related Information

- "Remove the RAID Expansion Module" on page 131

Servicing the Service Processor

These topics describe service procedures for the service processor in the server.

Service Processor Overview

If the service processor is replaced, the configuration settings maintained in the service processor will need to be restored. Before replacing the service processor, you should save the configuration using the ILOM backup utility.

System firmware consists of both service processor and host components. The service processor component is located on the service processor and the host component is located on the host. These two components must be compatible. When the service processor is replaced, the service processor firmware component on the new service processor may be incompatible with the existing host firmware component. In this case, the system firmware must be loaded as described in "Install the Service Processor" on page 138.

Related Information

▼ Locate a Faulty Service Processor

The following LEDs are lit when a service processor fault is detected:

- System Service Required LEDs on the front panel and rear I/O module
- System SP Status LED on the main module or rear I/O module

1. **Determine if the System Service Required LEDs are lit on the front panel or the rear I/O module.**

   See "Interpreting Diagnostic LEDs" on page 16.

2. **Check the SP Status LED on the main module or the rear I/O module to determine if the service processor needs to be replaced.**

   See "Main Module Motherboard LEDs" on page 198 or "Rear I/O Module LEDs" on page 19. The SP Status LED will be lit amber if the service processor needs to be replaced.

3. **Remove the faulty service processor.**

   See "Remove the Service Processor" on page 136.

Related Information

- "Service Processor Overview" on page 135
- "Remove the Service Processor" on page 136
- "Install the Service Processor" on page 138
- "Verify Service Processor Functionality" on page 140

▼ Remove the Service Processor

The service processor is a cold-service component that can be replaced by a customer.

1. **Back up the service processor configuration information before removing the service processor.**

   At the ILOM prompt, type:

```
-> cd /SP/config
-> dump -destination uri target
```

   where:

- The acceptable values for *uri* are:
  - tftp
  - ftp
  - sftp
  - scp
  - http
  - https
- *target* is the remote location where you will want to store the configuration information.

For example:

```
-> dump -destination tftp://129.99.99.99/pathname
```

2. **Remove the main module from the server.**

   See "Remove the Main Module" on page 70.

3. **Take the necessary ESD precautions.**

   See "Prevent ESD Damage" on page 69.

4. **Locate the service processor on the main module.**

   See "Main Module Components" on page 3.

5. **Grasp the service processor by the two grasp points, and lift up to disengage the service processor from the connectors on the motherboard.**

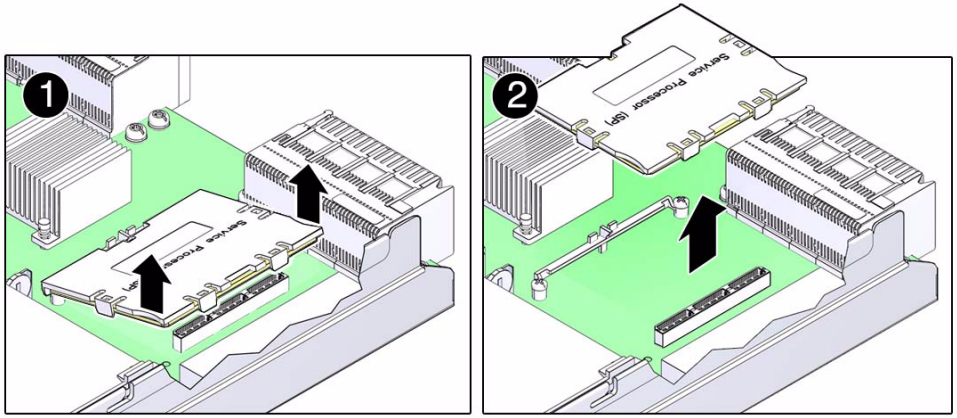

6. **Lift the service processor up and away from the motherboard.**

Related Information

- "Service Processor Overview" on page 135

- "Locate a Faulty Service Processor" on page 136
- "Install the Service Processor" on page 138
- "Verify Service Processor Functionality" on page 140

▼ Install the Service Processor

1. **Lower the side of the service processor with the `Align Tab` sticker down on the service processor tab on the motherboard.**

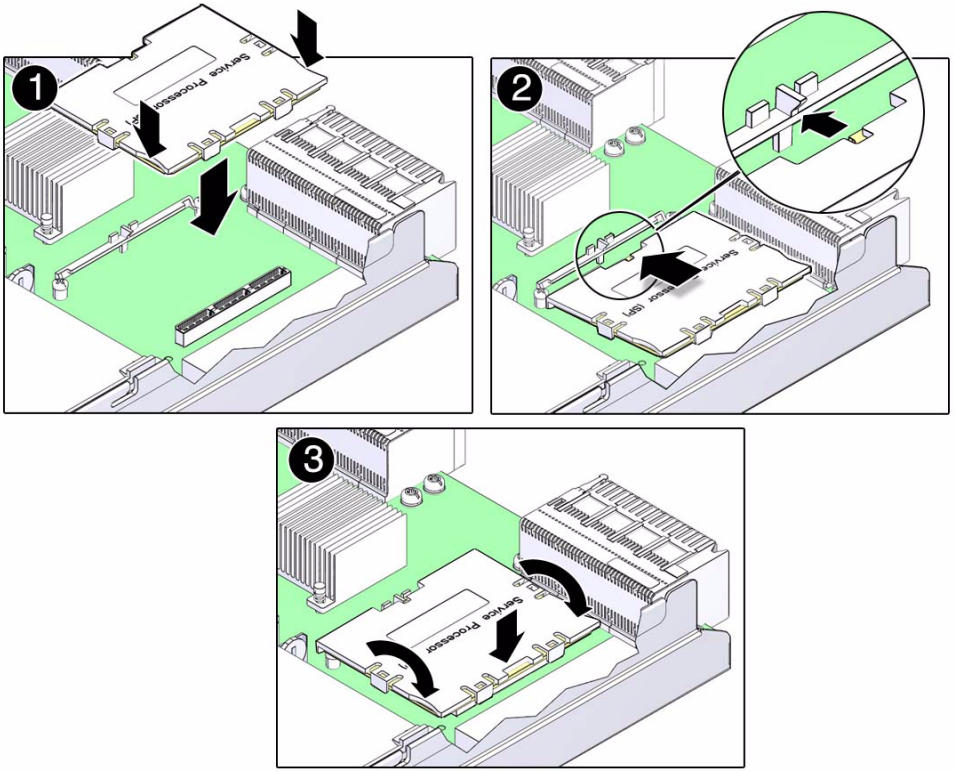

2. **Lower the other side of the service processor down and press down on the service processor to seat it into the connectors on the motherboard.**

3. **Install the main module back into the server.**

   See "Install the Main Module" on page 72.

4. **Connect a terminal or a terminal emulator (PC or workstation) to the serial management port.**

   If the replacement service processor detects that the service processor firmware is not compatible with the existing host firmware, further action will be suspended and the following message will be delivered over the serial management port.

```
Unrecognized Chassis: This module is installed in an unknown or
unsupported chassis. You must upgrade the firmware to a newer
version that supports this chassis.
```

   If you see this message, go on to Step 5.

5. **Download the system firmware.**

   a. **Configure the service processor's network port to enable the firmware image to be downloaded.**

      Refer to the Oracle ILOM documentation for network configuration instructions.

   b. **Download the system firmware.**

      Follow the firmware download instructions in the Oracle ILOM documentation.

Note – You can load any supported system firmware version, including the firmware revision that had been installed prior to the replacement of the service processor.

---

6. **Restore the service processor configuration information that you backed up earlier.**

   At the ILOM prompt, type:

```
-> cd /SP/config
-> load -source uri target
```

   where:

   - The acceptable values for *uri* are:
     - tftp
     - ftp
     - sftp
     - scp
     - http
     - https

- *target* is the remote location where you stored the configuration information.

  For example:

```
-> load -source tftp://129.99.99.99/pathname
```

7. **Verify the service processor.**

   See "Verify Service Processor Functionality" on page 140.

Related Information

- "Service Processor Overview" on page 135
- "Locate a Faulty Service Processor" on page 136
- "Remove the Service Processor" on page 136
- "Verify Service Processor Functionality" on page 140

▼ Verify Service Processor Functionality

1. **Verify that the SP Status LED on the main module or rear I/O module is lit green.**

   See "Main Module Motherboard LEDs" on page 198 or "Rear I/O Module LEDs" on page 19.

2. **Verify that the front and rear Service Required LEDs are not lit.**

   See "Interpreting Diagnostic LEDs" on page 16.

3. **Perform one of the following tasks based on your verification results:**
   - If the previous steps did not clear the fault, see "Diagnostics Process" on page 12.
   - If the previous steps indicate that no faults have been detected, then the service processor has been replaced successfully. No further action is required.

Related Information

- "Service Processor Overview" on page 135
- "Locate a Faulty Service Processor" on page 136
- "Remove the Service Processor" on page 136
- "Install the Service Processor" on page 138

Servicing the System Battery

These topics describe service procedures for the system battery in the server.

▼ Remove the System Battery

The system battery is a cold-service component that can be replaced by a customer.

1. **Remove the main module from the server.**

   See "Remove the Main Module" on page 70.

2. **Locate the system battery in the main module.**

   See "Main Module Components" on page 3.

3. **Push the top edge of the battery against the spring and lift it out of the carrier.**

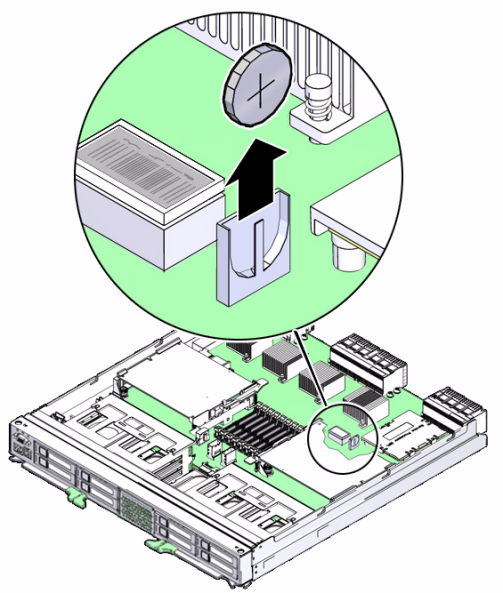

Related Information

- "Install the System Battery" on page 142
- "Verify the System Battery" on page 144

▼ Install the System Battery

1. **Insert the new system battery in the main module, with the positive side (+) facing out.**

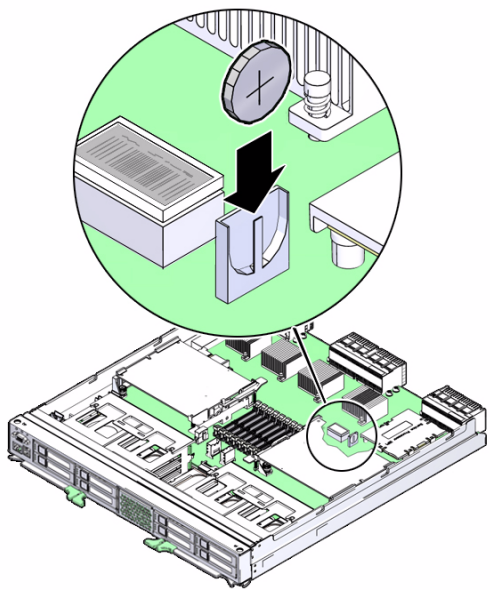

2. **Install the main module back into the server.**

   See "Install the Main Module" on page 72.

3. **If the service processor is configured to synchronize with a network time server using the Network Time Protocol (NTP), the ILOM clock will be reset as soon as the server is powered on and connected to the network. Otherwise, proceed to the next step.**

4. **If the service processor is not configured to use NTP, you must reset the ILOM clock using the ILOM CLI or the web interface. For instructions, see the Oracle Integrated Lights Out Manager (ILOM) 3.0 Documentation Collection.**

5. **If the service processor is not configured to use NTP, use the ILOM `clock` command to set the day and time.**

   The following example sets the date to June 17, 2010, and the timezone to GMT.

```
-> set /SP/clock datetime=061716192010

-> show /SP/clock

/SP/clock
  Targets:

  Properties:
        datetime = Wed JUN 17 16:19:56 2010
        timezone = GMT (GMT)
```

```
        usentpserver = disabled
  Commands:
        cd
        set
        show
```

Note – For additional details about setting the ILOM clock, refer to the CLI Procedures Guide for Oracle ILOM.

---

6. **Verify that the new system battery is functioning properly.**

   See "Verify the System Battery" on page 144.

Related Information

- "Remove the System Battery" on page 141
- "Verify the System Battery" on page 144

▼ Verify the System Battery

1. **Run** `show /SYS/MB/BAT/V_BAT` **to check the status of the system battery.**

   In the output, the `/SYS/MB/BAT/V_BAT` status should be "OK", as in the following example.

```
sc> show /SYS/MB/BAT/V_BAT
Voltage sensors (in Volts):
----------------------------------------------------------------------------
Sensor Status     Voltage LowSoft LowWarn HighWarn HighSoft
----------------------------------------------------------------------------
/SYS/MB/V_+3V3_STBY            OK         3.36    3.13     3.17 3.53      3.60
/SYS/MB/V_+3V3_MAIN            OK         3.37    3.06     3.10 3.49      3.53
/SYS/MB/V_+5V0_VCC             OK         5.07    4.55     4.65 5.36      5.46
/SYS/MB/V_+12V0_MAIN           OK        12.10   10.90    11.15 12.85     13.10
/SYS/MB/BAT/V_BAT              OK         2.83      --     2.69
.
.
.
```

2. **Verify that the value in the** `Voltage` **column shows an approximate voltage of 2.8V.**

Related Information

- "Remove the System Battery" on page 141
- "Install the System Battery" on page 142

Servicing Fan Modules

These topics describe service procedures for the fan modules in the server.

Fan Module Overview

The server will continue to operate at full capacity with four or more fan modules installed in the server. The server will not operate with fewer than four fan modules installed and operating. If your server is operating with four fan modules installed and one or more of those four fan modules fails, the server will power down to keep from overheating. You can perform a hot service on a fan module only if four or more fan modules are operational.

Related Information

- "Fan Module Configuration Reference" on page 148
- "Fan Module LED" on page 149
- "Locate a Faulty Fan Module" on page 150
- "Remove a Fan Module" on page 150
- "Install a Fan Module" on page 152
- "Verify Fan Module Functionality" on page 153

Fan Module Configuration Reference

FIGURE: Fan Module Configuration Reference

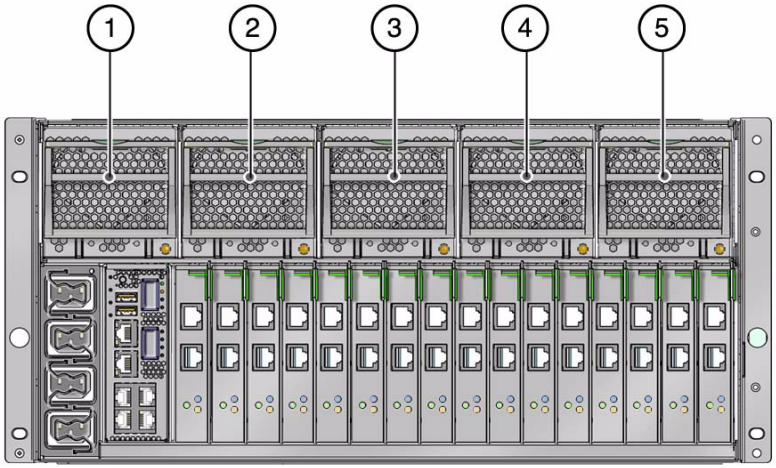

Figure Legend

1	Fan module 0
2	Fan module 1
3	Fan module 2
4	Fan module 3
5	Fan module 4

Related Information

- "Fan Module Overview" on page 147
- "Fan Module LED" on page 149
- "Locate a Faulty Fan Module" on page 150
- "Remove a Fan Module" on page 150
- "Install a Fan Module" on page 152
- "Verify Fan Module Functionality" on page 153

Fan Module LED

FIGURE: Fan Module LED

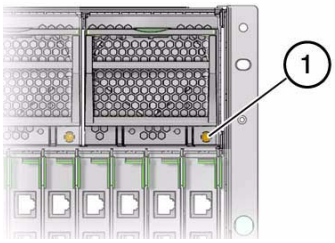

TABLE: Fan Module Status LEDs

No.	LED	Icon	Description
1	Service Required (amber)	⚠	The LED amber when the fan module is faulty. The system Fan Fault LED is also lit when a Fan module LED is amber.

The front and rear panel Service Required LEDs also turn on if the system detects a fan module fault.

If the fan fault causes an overtemperature condition to occur, the system Overtemp LED will turn on, and an error message will be logged and displayed on the system console.

Related Information

- "Fan Module Overview" on page 147
- "Fan Module Configuration Reference" on page 148
- "Locate a Faulty Fan Module" on page 150
- "Remove a Fan Module" on page 150
- "Install a Fan Module" on page 152
- "Verify Fan Module Functionality" on page 153

▼ Locate a Faulty Fan Module

The following LEDs are lit when a fan module fault is detected:

- System Service Required LEDs on the front panel and rear I/O module
- System Fan Fail LED on the front panel
- Service Required LED on the faulty fan module

1. **Determine if the System Service Required LEDs are lit on the front panel or the rear I/O module.**

   See "Interpreting Diagnostic LEDs" on page 16.

2. **Determine if the System Fan Fail LED on the front panel is lit.**

   See "Front Panel System Controls and LEDs" on page 16.

3. **From the rear of the server, check the fan module LEDs to identify which fan module needs to be replaced.**

   See "Fan Module LED" on page 149. The amber Service Required LED will be lit on the fan module that needs to be replaced.

4. **Remove the faulty processor module.**

   See "Remove a Fan Module" on page 150.

Related Information

- "Fan Module Overview" on page 147
- "Fan Module Configuration Reference" on page 148
- "Fan Module LED" on page 149
- "Remove a Fan Module" on page 150
- "Install a Fan Module" on page 152
- "Verify Fan Module Functionality" on page 153

▼ Remove a Fan Module

The fan module is a hot-service component that can be replaced by a customer.

1. **Locate the faulty fan module that you want to remove from the server.**

- See "Rear Components" on page 6 for the locations of the fan modules in the server.
- See "Locate a Faulty Fan Module" on page 150 to locate a faulty fan module.

2. **Determine if you can remove the fan module with the server running or not.**

   See "Fan Module Overview" on page 147 to determine if you can remove a fan module with the server running or if you must shut down the server before removing a fan module.

   - If you can remove a fan module with the server running, go to Step 3.
   - If you cannot remove a fan module with the server running, see "Removing Power From the System" on page 66 to power down the server before continuing.

3. **Press down on the middle portion of the fan lever and lower the lever slightly to disengage the fan latch.**

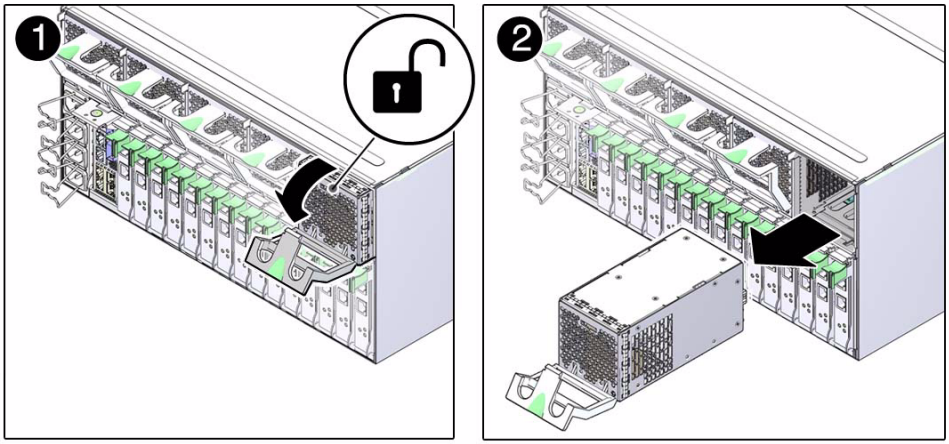

4. **Lower the fan lever completely and pull out on the fan module to remove the fan module from the system.**

Related Information

- "Fan Module Overview" on page 147
- "Fan Module Configuration Reference" on page 148
- "Fan Module LED" on page 149
- "Locate a Faulty Fan Module" on page 150
- "Install a Fan Module" on page 152
- "Verify Fan Module Functionality" on page 153

▼ Install a Fan Module

1. **Insert the fan module into the empty fan module slot.**

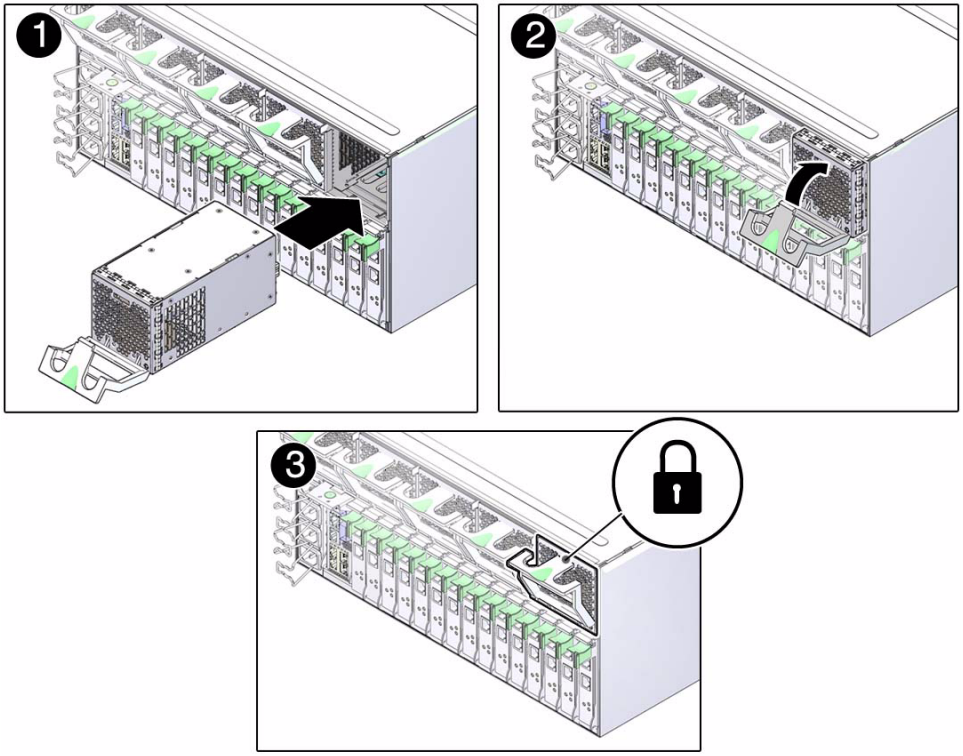

2. **Lift the fan lever up completely until the latch clicks into place to completely seat the fan module into the slot.**

3. **Power on the server, if necessary.**

   If you had to power off the server before removing and installing a new fan, see "Returning the Server to Operation" on page 209 to power on the server again.

4. **Verify the fan module functionality.**

   See "Verify Fan Module Functionality" on page 153.

Related Information

- "Fan Module Overview" on page 147
- "Fan Module Configuration Reference" on page 148

- "Fan Module LED" on page 149
- "Locate a Faulty Fan Module" on page 150
- "Remove a Fan Module" on page 150
- "Verify Fan Module Functionality" on page 153

▼ Verify Fan Module Functionality

1. **Check the front or rear panel LEDs for the following indications:**
   - Green System OK LED – illuminated
   - Amber System Fault LED – not illuminated
   - Amber System Fan Fault LED – not illuminated

   See "Front Panel System Controls and LEDs" on page 16 and "Rear I/O Module LEDs" on page 19.

   If these conditions are met, continue to Step 2.

   If these conditions are not met, perform the actions described in "Diagnostics Process" on page 12.

2. **Run the ILOM `show faulty` command to check for faults.**

   See "Access the Service Processor (ILOM)" on page 24, and "Check for Faults (show faulty Command)" on page 27.

   - If faults are reported, perform the actions described in "Diagnostics Process" on page 12.
   - If no faults are reported, then the fan module has been replaced successfully. No further action is required.

Related Information

- "Fan Module Overview" on page 147
- "Fan Module Configuration Reference" on page 148
- "Fan Module LED" on page 149
- "Locate a Faulty Fan Module" on page 150
- "Remove a Fan Module" on page 150
- "Install a Fan Module" on page 152

Servicing Express Modules

These topics describe service procedures for the express modules in the server.

Express Module Configuration Reference

There are 16 express module slots at the rear of the server. The express module slots are numbered from 0-15 (EM0-EM15) from left to right when viewing the server from the rear.

FIGURE: Express Module Configuration Reference

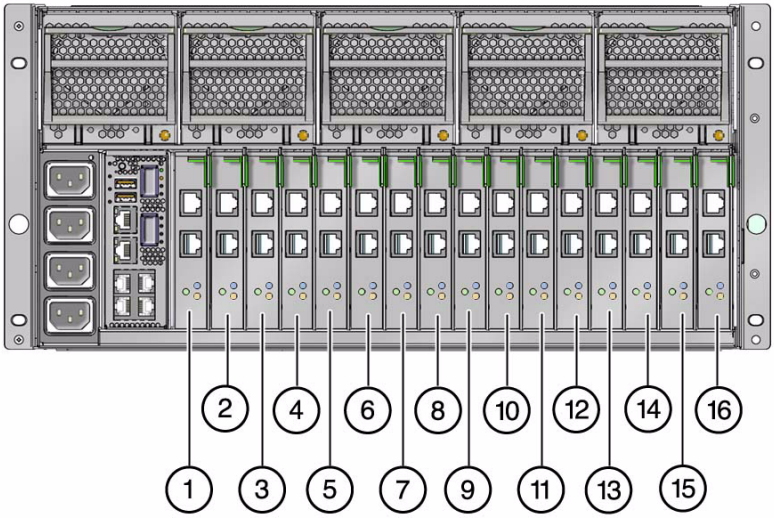

Figure Legend

1	Express module slot 0	**9**	Express module slot 8
2	Express module slot 1	**10**	Express module slot 9
3	Express module slot 2	**11**	Express module slot 10
4	Express module slot 3	**12**	Express module slot 11
5	Express module slot 4	**13**	Express module slot 12
6	Express module slot 5	**14**	Express module slot 13
7	Express module slot 6	**15**	Express module slot 14
8	Express module slot 7	**16**	Express module slot 15

All 16 express module slots support the cards with the following characteristics:

- Hot-plug express modules
- x8 Gen1 and x8 Gen2 express modules

You can increase the number of express module slots by connecting an I/O expansion unit to the server. The link card used by an I/O expansion unit can only be installed in express module slots EM2 or EM8 in the server. For a system with a single processor module installed, install the link card used by an I/O expansion unit in express module slot EM8.

When installing express modules in the system (other than the link card used by an I/O expansion unit), refer to the following guidelines for the best order to achieve optimal load balancing.

System With One Processor Module				
Populate these slots first, in this order:	EM0	EM8	EM1	EM9
Populate these slots second, in this order:	EM2	EM10	EM3	EM11
Populate these slots third, in this order:	EM4	EM12	EM5	EM13
Populate these slots fourth, in this order:	EM6	EM14	EM7	EM15
System With Two Processor Modules				
Populate these slots first, in this order:	EM0	EM8	EM4	EM12
Populate these slots second, in this order:	EM1	EM9	EM5	EM13
Populate these slots third, in this order:	EM2	EM10	EM6	EM14
Populate these slots fourth, in this order:	EM3	EM11	EM7	EM15

Note that the guidelines above are recommended best-practice guidelines for load balancing. You might choose to populate the express module slots differently due to LDom or redundant failover considerations.

Related Information

- "Express Module FRU Paths" on page 157
- "Locate a Faulty Express Module" on page 163
- "Remove an Express Module" on page 164
- "Install an Express Module" on page 166
- "Verify Express Module Functionality" on page 168

Express Module FRU Paths

The FRU paths for the express modules will vary, depending on the following factors:

- The number of processor modules installed in the server
- Whether or not a processor module has failed and the FRU paths have been rerouted down backup failover paths

The following topics provide example scenarios for express module FRU paths and what the FRU paths would be for each scenario:

FRU Paths For Systems With One Running Processor Module

The following figure shows the express module topology for a server with one running processor module installed, where the running processor module is installed in processor module slot 0 and a filler panel is installed in processor module slot 1.

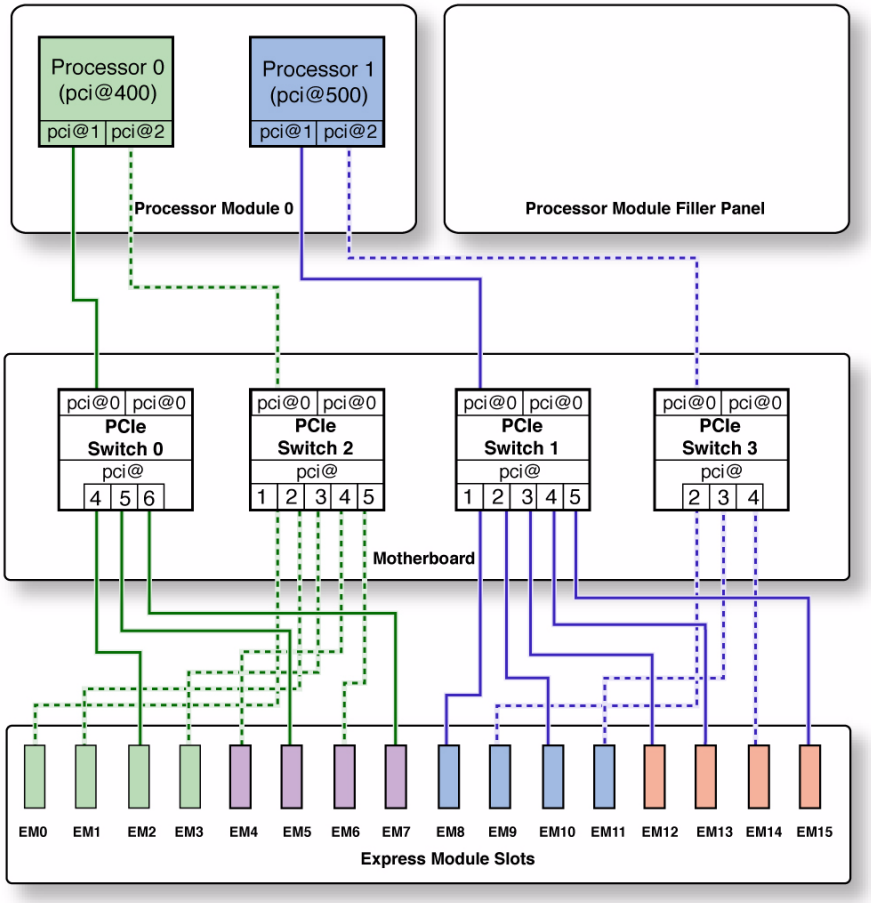

In this scenario, the FRU path for express module slot 7 (EM7) will follow this path, starting from the processor module:

1. Processor 0 in processor module 0, to
2. PCIe switch 0, to
3. Express module slot 7 (EM7)

In this scenario, the full FRU path for EM7 would be this:

```
/pci@400/pci@1/pci@0/pci@6
```

As a second example, the FRU path for express module slot 8 (EM8) will follow this path, starting from the processor module:

1. Processor 1 in processor module 0, to
2. PCIe switch 1, to
3. Express module slot 8 (EM8)

In this scenario, the full FRU path for EM8 would be this:

```
/pci@500/pci@1/pci@0/pci@1
```

Related Information

- "FRU Paths For Systems With Two Running Processor Modules" on page 159
- "FRU Paths For Systems With One Failed Processor Module" on page 161

FRU Paths For Systems With Two Running Processor Modules

The following figure shows the express module topology for a server with two running processor modules installed.

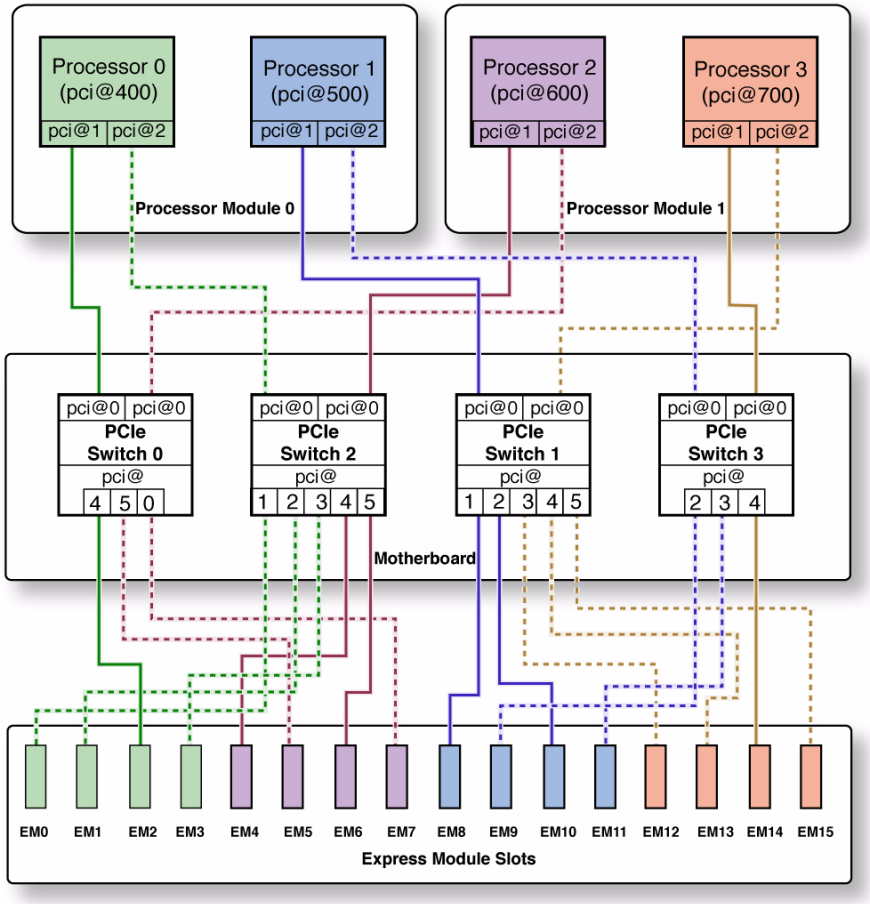

In this scenario, the FRU path for express module slot 7 (EM7) will follow this path, starting from the processor module:

1. Processor 2 in processor module 1, to
2. PCIe switch 0, to
3. Express module slot 7 (EM7)

In this scenario, the full FRU path for EM7 would be this:

```
/pci@600/pci@2/pci@0/pci@0
```

Note that the final `pci@` path in the full FRU path would change from `pci@6` in a single-processor module scenario to `pci@0` for a dual-processor module scenario (see "FRU Paths For Systems With One Running Processor Module" on page 158 for the full FRU path for EM7 in a single-processor module scenario). Express module slot 7

is the only express module slot where the final `pci@` path in the full FRU path would change between a single-processor module scenario and a dual-processor module scenario.

As a second example, the FRU path for express module slot 8 (EM8) will follow this path, starting from the processor module:

1. Processor 1 in processor module 0, to
2. PCIe switch 1, to
3. Express module slot 8 (EM8)

In this scenario, the full FRU path for EM8 would be this:

```
/pci@500/pci@1/pci@0/pci@1
```

Related Information

- "FRU Paths For Systems With One Running Processor Module" on page 158
- "FRU Paths For Systems With One Failed Processor Module" on page 161

FRU Paths For Systems With One Failed Processor Module

The following figure shows the express module topology for a server with two processor modules installed, but one of the processor modules has failed (in this case, processor module 0). Note that in this scenario, all of the paths to the express module slots that would have come from processor module 0 have been rerouted to processor module 1.

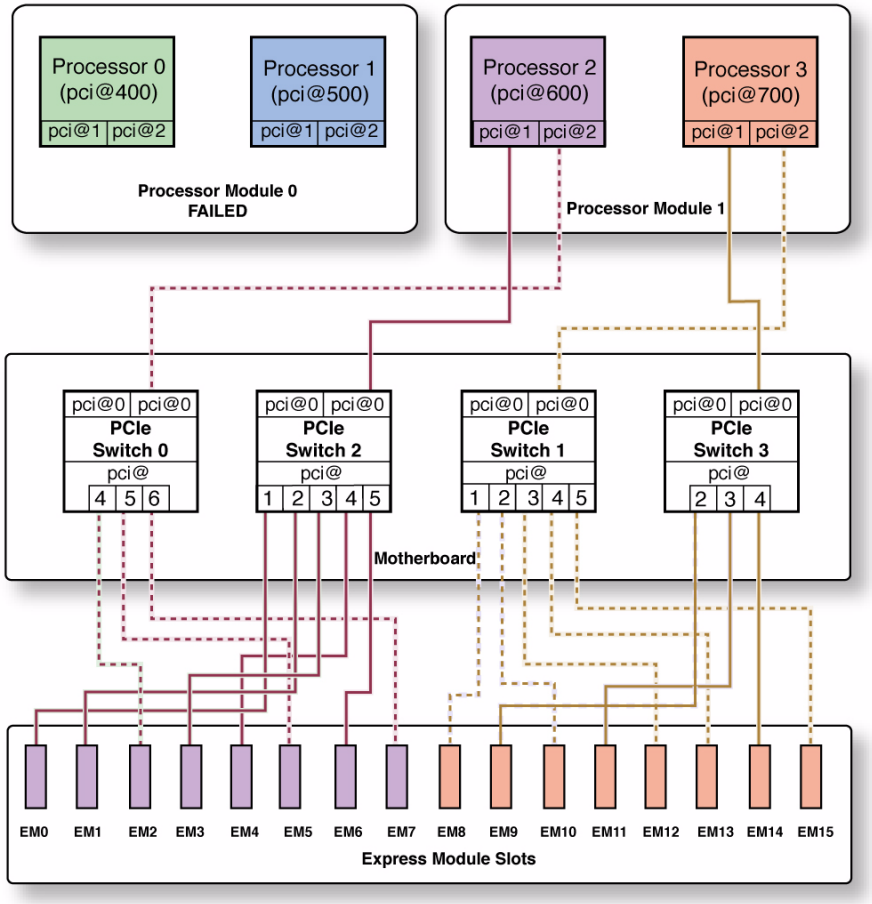

In this scenario, the FRU path for express module slot 7 (EM7) will follow this path, starting from the processor module:

1. Processor 2 in processor module 1, to
2. PCIe switch 0, to
3. Express module slot 7 (EM7)

In this scenario, the full FRU path for EM7 would be this:

```
/pci@600/pci@2/pci@0/pci@6
```

As a second example, the FRU path for express module slot 8 (EM8) will follow this path, starting from the processor module:

1. Processor 3 in processor module 1, to

2. PCIe switch 1, to
3. Express module slot 8 (EM8)

In this scenario, the full FRU path for EM8 would be this:

```
/pci@700/pci@2/pci@0/pci@1
```

Related Information

- "FRU Paths For Systems With One Running Processor Module" on page 158
- "FRU Paths For Systems With Two Running Processor Modules" on page 159

▼ Locate a Faulty Express Module

The following LEDs are lit when an express module fault is detected:

- System Service Required LEDs on the front panel and rear I/O module
- System EM Fault LED on the front panel
- Service Required LED on the faulty express module

1. **Determine if the System Service Required LEDs are lit on the front panel or the rear I/O module.**

   See "Interpreting Diagnostic LEDs" on page 16.

2. **Determine if the System EM Fault LED is lit on the front panel.**

   See "Front Panel System Controls and LEDs" on page 16.

3. **From the rear of the server, check the express module LEDs to identify which express module needs to be replaced.**

   The amber Service Required LED will be lit on the express module that needs to be replaced.

4. **Remove the faulty express module.**

   See "Remove an Express Module" on page 164.

Related Information

- "Express Module Configuration Reference" on page 155
- "Remove an Express Module" on page 164
- "Install an Express Module" on page 166
- "Verify Express Module Functionality" on page 168

▼ Remove an Express Module

The express module is a hot-service component that can be replaced by a customer.

1. **Take the necessary ESD precautions.**

   See "Prevent ESD Damage" on page 69.

2. **Locate the express module at the rear of the server that you want to remove.**
   - See "Rear Components" on page 6 for the locations of the express modules in the server.
   - See "Locate a Faulty Express Module" on page 163 to locate a faulty express module.

3. **Determine if you are removing an express module from a running system.**
   - If you are removing an express module from a system that is running (if you are hot-swapping the express module), go to Step 4.
   - If you are removing an express module from a powered-down system, go to Step 5.

4. **Determine if the express module has an Attention button.**

   If the express module has an Attention button, you can use that button to hot-swap the card from the server. If not, you can use the command line interface to hot-swap the express module.
   - If the express module has an Attention button, press the button to bring the express module offline. The express module's Power OK LED should go off, indicating that the module is ready to be removed. Go to Step 5.
   - If the express module does not have an Attention button, bring the module offline using the command line interface:

     a. **At the Oracle Solaris prompt, type the `cfgadm -al` command to list all devices in the device tree, including express modules:**

```
# cfgadm -al
```

This command lists dynamically reconfigurable hardware resources and shows their operational status. In this case, look for the status of the drive you plan to remove. This information is listed in the Occupant column.

Example:

```
Ap_id                    Type        Receptacle   Occupant       Condition
PCI-EM0                  sas/hp      connected    configured      ok
PCI-EM1                  sas/hp      connected    configured      ok
...
```

b. Disconnect the express module using the `cfgadm -c disconnect` **command.**

Example:

```
# cfgadm -c disconnect Ap_id
```

Replace *Ap_id* with the ID of the express module that you want to remove.

c. Verify that the express module's blue Ready-to-Remove LED is lit.

5. Disconnect any cables connected to the card.

Tip – Label the cables to ensure proper connection to the replacement card.

---

6. Pull the express module handle down to disengage the card from the card cage.

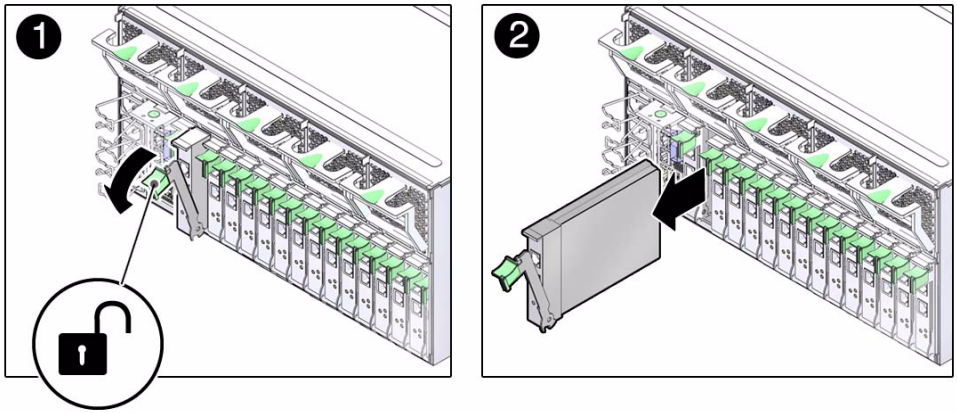

7. Remove the express module from the server.

Related Information

- "Express Module Configuration Reference" on page 155
- "Locate a Faulty Express Module" on page 163
- "Install an Express Module" on page 166

■ "Verify Express Module Functionality" on page 168

▼ Install an Express Module

Caution – This procedure involves handling circuit boards that are extremely sensitive to static electricity. Ensure that you follow ESD preventative practices to avoid damaging the circuit boards.

1. **Take the necessary ESD precautions.**

   See "Prevent ESD Damage" on page 69.

2. **Insert the express module into the empty express module slot.**

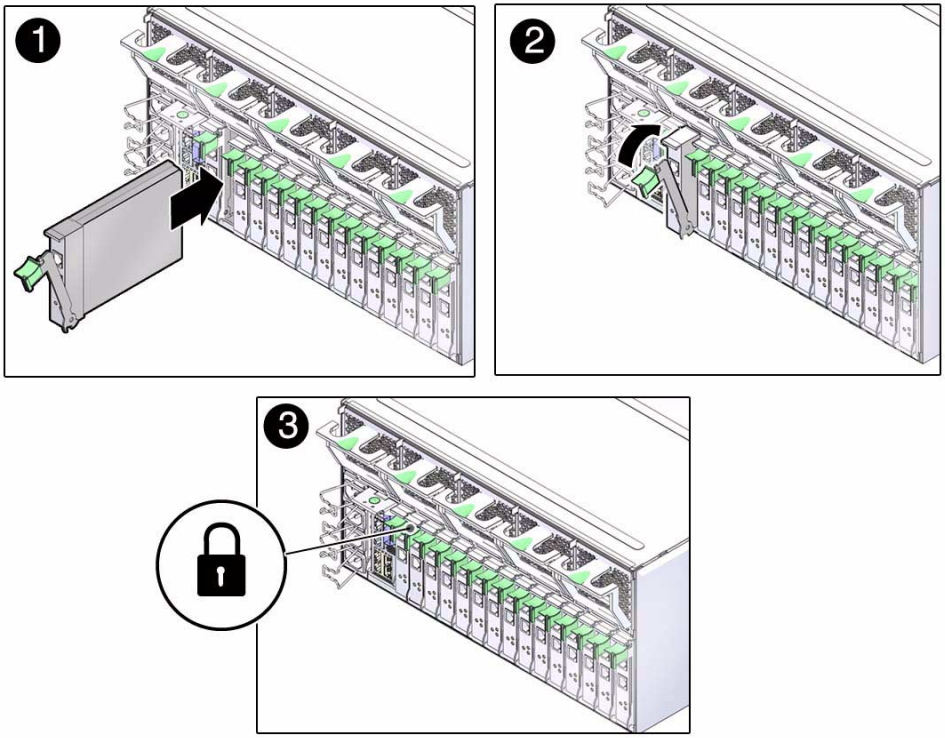

3. **Close the express module latch to lock the card in place.**

4. **Reconnect the cables to the express module, if necessary.**

5. **Determine if you replaced or installed an express module in a running system.**
   - If you replaced or installed an express module in a system that is running (if you hot-swapped the express module), go to Step 6.
   - If you replaced or installed an express module in a powered-down system, power on the system using the instructions provided in "Returning the Server to Operation" on page 209, then go to Step 7.

6. **Determine if the express module has an Attention button.**

   If the express module has an Attention button, you can use that button to bring the express card online. If not, you can use the command line interface to bring the express module online.
   - If the express module has an Attention button, press the button to bring the express module online. The express module's Power OK LED should go on, indicating that the module is now online. Go to Step 7.
   - If the express module does not have an Attention button, bring the module online using the command line interface:

     a. **At the Oracle Solaris prompt, type the `cfgadm -al` command to list all devices in the device tree, including the express modules:**

```
# cfgadm -al
```

This command helps you identify the express module you installed. For example:

```
Ap_id                        Type         Receptacle   Occupant        Condition
PCI-EM0                      sas/hp       connected    configured       ok
PCI-EM1                      unknown      empty        unconfigured     unknown
...
```

     b. **Connect the express module using the `cfgadm -c connect` command.**

     Example:

```
# cfgadm -c connect Ap_id
```

Replace *Ap_id* with the ID of the express module that you want to connect.

     c. **Verify that the blue Ready-to-Remove LED is no longer lit on the express module that you installed.**

     d. **At the Oracle Solaris prompt, type the `cfgadm -al` command to list all drives in the device tree:**

```
# cfgadm -al
```

The replacement express module is now listed as connected. For example:

```
Ap_id                        Type        Receptacle   Occupant        Condition
PCI-EM0                      sas/hp       connected    configured       ok
PCI-EM1                      sas/hp       connected    configured       ok
...
```

7. **Verify the express module functionality.**

   See "Verify Express Module Functionality" on page 168.

Related Information

- "Express Module Configuration Reference" on page 155
- "Locate a Faulty Express Module" on page 163
- "Remove an Express Module" on page 164
- "Verify Express Module Functionality" on page 168

▼ Verify Express Module Functionality

1. **Verify that the Fault LED is not lit on the express module.**
2. **Verify that the System Service Required LEDs on the front panel and rear I/O module are not lit.**

   See "Interpreting Diagnostic LEDs" on page 16.
3. **Verify that the System EM Fault LED on the front panel is not lit.**

   See "Front Panel System Controls and LEDs" on page 16.
4. **Perform one of the following tasks based on your verification results:**
   - If the previous steps did not clear the fault, see "Diagnostics Process" on page 12.
   - If the previous steps indicate that no faults have been detected, then the express module has been replaced successfully. No further action is required.

Related Information

- "Express Module Configuration Reference" on page 155
- "Locate a Faulty Express Module" on page 163
- "Remove an Express Module" on page 164
- "Install an Express Module" on page 166

Servicing the Rear I/O Module

These topics describe service procedures for the rear I/O module in the server.

Rear I/O Module LEDs

The rear I/O module has several LEDs, some of which give system status information, while others provide link information on the NET and QSFP ports.

FIGURE: Rear I/O Module LEDs

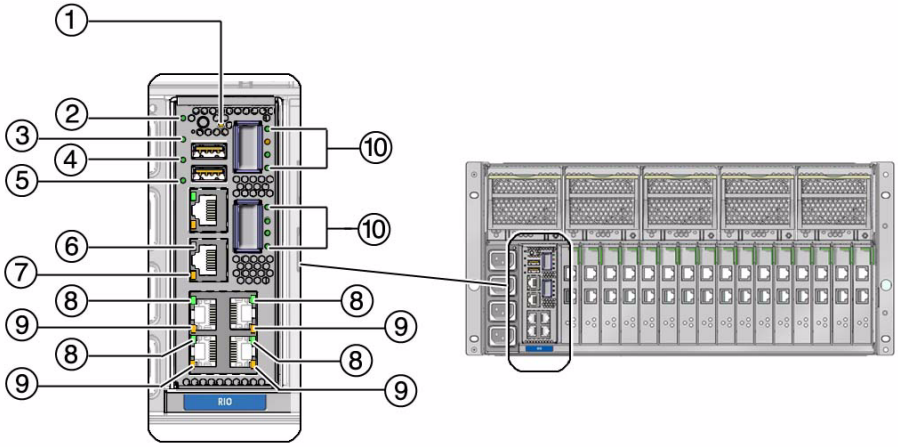

TABLE: Rear Panel Controls and LEDs

No.	LED	Icon	Description
1	System Locator LED and button (white)		The Locator LED can be turned on to identify a particular system. When on, it blinks rabidly. There are two methods for turning a Locator LED on: • Issuing the ILOM command `set /SYS/LOCATE value=Fast_Blink` • Pressing the Locator button
2	System Service Required LED (amber)		Indicates that service is required. POST and ILOM are two diagnostic tools that can detect a fault or failure resulting in this indication. The ILOM `show faulty` command provides details about any faults that cause this indicator to light. The System Service Required LED will also light on the rear I/O module if the rear I/O module has failed.
3	System Power OK LED (green)	OK	Indicates the following conditions: • Off – System is not running in its normal state. System power might be off. The service processor might be running. • Steady on – System is powered on and is running in its normal operating state. No service actions are required. • Fast blink – System is running in standby mode and can be quickly returned to full function. • Slow blink – A normal but transitory activity is taking place. Slow blinking might indicate that system diagnostics are running or the system is booting.
4	Service Processor LED	SP	Indicates the following conditions: • Off – Indicates the AC power might have been connected to the power supplies. • Steady on, green – Service processor is running in its normal operating state. No service actions are required. • Blink, green – Service processor is initializing the ILOM firmware. • Steady on, amber – A service processor error has occurred and service is required.

TABLE: Rear Panel Controls and LEDs *(Continued)*

No.	LED	Icon	Description
5	System Overtemp LED (amber)		Provides the following operational temperature indications: • Off – Indicates a steady state, no service action is required. • Steady on – Indicates that a temperature failure event has been acknowledged and a service action is required.
6	Net Management Link and Activity (green)		Indicates the following conditions: • On or blinking – A link is established. • Off – No link is established.
7	Net Management Speed (green)		Indicates the following conditions: • On or blinking – The link is operating as a 100-Mbps connection. • Off – The link is operating as a 10-Mbps connection.
8	NET Link and Activity (green)		Indicates the following conditions: • Blinking – A link is established. • Off – No link is established.
9	NET Speed (amber/green)		Indicates the following conditions: • Green on – The link is operating as a Gigabit connection (1000 Mbps). • Amber on – The link is operating as a 100-Mbps connection. • Off – The link is operating as a 10-Mbps connection or there is no link.
10	QSFP Link and Activity (green)		Indicates the following conditions: • Blinking – A link is established. • Off – No link is established.

Related Information

- "Locate a Faulty Rear I/O Module" on page 172
- "Remove the Rear I/O Module" on page 172
- "Install the Rear I/O Module" on page 173
- "Verify Rear I/O Module Functionality" on page 175

▼ Locate a Faulty Rear I/O Module

The System Service Required LED on the rear I/O module will light when a rear I/O module fault is detected.

1. **Determine if the System Service Required LED is lit on the rear I/O module.**

   See "Rear I/O Module LEDs" on page 169.

2. **Remove the faulty rear I/O module.**

   See "Remove the Rear I/O Module" on page 172.

Related Information

- "Rear I/O Module LEDs" on page 169
- "Remove the Rear I/O Module" on page 172
- "Install the Rear I/O Module" on page 173
- "Verify Rear I/O Module Functionality" on page 175

▼ Remove the Rear I/O Module

The rear I/O module is a cold-service component that can be replaced by a customer.

1. **Take the necessary ESD precautions.**

   See "Prevent ESD Damage" on page 69.

2. **Locate the failed rear I/O module.**

   - See "Rear Components" on page 6 for the location of the rear I/O module in the server.
   - See "Locate a Faulty Rear I/O Module" on page 172 to verify that the rear I/O module has failed.

3. **Power off the server.**

   See "Removing Power From the System" on page 66.

4. **Label the cables connected to the ports on the rear I/O module, then disconnect the cables from the ports.**

   You will reconnect the cables to the same ports on the replacement rear I/O module.

5. **Press the green button on the rear I/O module ejection lever and lower the lever slightly.**

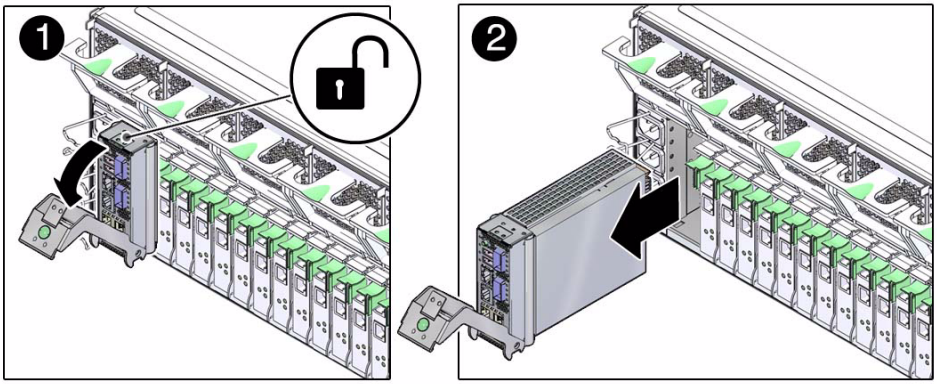

6. **Lower the lever completely to unseat the rear I/O module, and then pull the module away from the server to remove it.**

Related Information

- "Rear I/O Module LEDs" on page 169
- "Locate a Faulty Rear I/O Module" on page 172
- "Install the Rear I/O Module" on page 173
- "Verify Rear I/O Module Functionality" on page 175

▼ Install the Rear I/O Module

1. **Take the necessary ESD precautions.**

   See "Prevent ESD Damage" on page 69.

2. **With the lever in the lowered position, insert the rear I/O module into the slot at the rear of the server.**

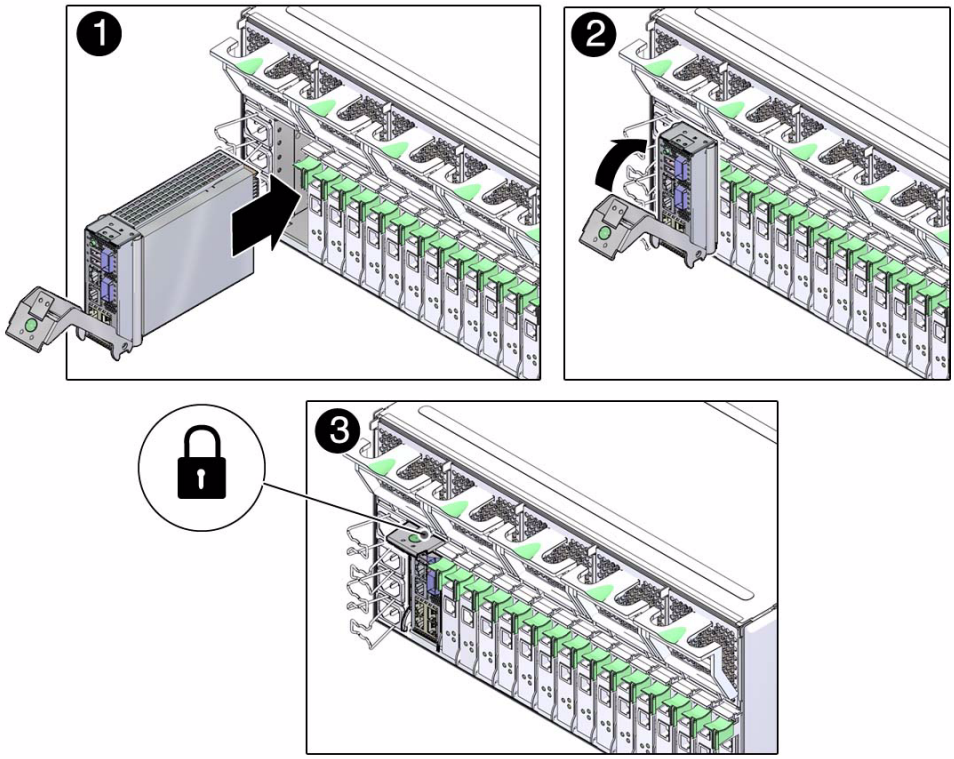

3. **Raise the extraction lever up until it clicks into place, fully seating the rear I/O module into the server.**
4. **Connect the cables to the appropriate ports on the rear I/O module.**
5. **Power on the server.**

   See "Returning the Server to Operation" on page 209.
6. **Verify the rear I/O module functionality.**

   See "Verify Rear I/O Module Functionality" on page 175.

Related Information

- "Rear I/O Module LEDs" on page 169
- "Locate a Faulty Rear I/O Module" on page 172
- "Remove the Rear I/O Module" on page 172
- "Verify Rear I/O Module Functionality" on page 175

▼ Verify Rear I/O Module Functionality

1. **Verify that the System Service Required LED on the rear I/O module is not lit.**

   See "Rear I/O Module LEDs" on page 169.

2. **Perform one of the following tasks based on your verification results.**
   - If the previous steps did not clear the fault, see "Diagnostics Process" on page 12.
   - If Step 1 indicated that no faults have been detected, then the rear I/O module has been replaced successfully. No further action is required.

Related Information

- "Rear I/O Module LEDs" on page 169
- "Locate a Faulty Rear I/O Module" on page 172
- "Remove the Rear I/O Module" on page 172
- "Install the Rear I/O Module" on page 173

Servicing the System Configuration PROM

These topics describe service procedures for the system configuration PROM in the server.

System Configuration PROM Overview

The System Configuration PROM stores the host ID and MAC address.

If you have to replace the motherboard, be sure to move the System Configuration PROM from the old motherboard to the new motherboard. This step will ensure that the server will retain its original host ID and MAC address.

Related Information

- "Remove the System Configuration PROM" on page 177
- "Install the System Configuration PROM" on page 179

▼ Remove the System Configuration PROM

The system configuration PROM is a cold-service component that can be replaced only by authorized service personnel.

Before beginning this procedure, ensure that you are familiar with the cautions and safety instructions described in "Safety Information" on page 59.

Caution – This procedure involves handling circuit boards that are extremely sensitive to static electricity. Ensure that you follow ESD preventative practices to avoid damaging the circuit boards.

Note – The System Configuration PROM is plugged into a socket on the motherboard. It includes a yellow barcode label.

---

1. **Remove the main module from the server.**

   See "Remove the Main Module" on page 70.

2. **Take the necessary ESD precautions.**

   See "Prevent ESD Damage" on page 69.

3. **Locate the system configuration PROM on the main module.**

   See "Main Module Components" on page 3.

4. **Grasp the system configuration PROM and lift it up to remove it from the main module.**

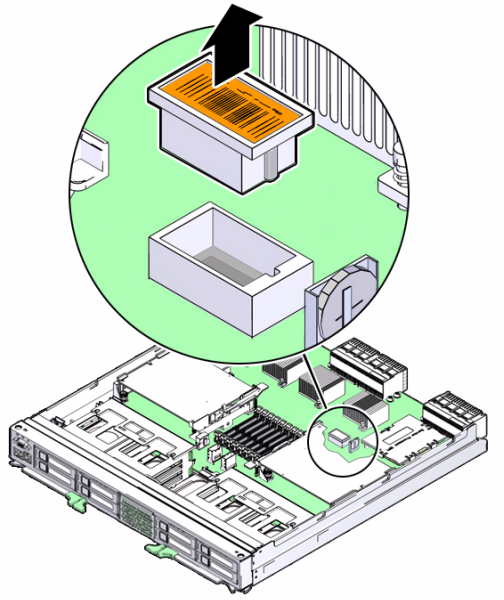

Related Information

- "System Configuration PROM Overview" on page 177
- "Install the System Configuration PROM" on page 179

▼ Install the System Configuration PROM

Before beginning this procedure, ensure that you are familiar with the cautions and safety instructions described in "Safety Information" on page 59.

Caution – This procedure involves handling circuit boards that are extremely sensitive to static electricity. Ensure that you follow ESD preventative practices to avoid damaging the circuit boards.

Note – The System Configuration PROM is plugged into a socket on the motherboard. It includes a yellow barcode label.

1. **Orient the system configuration PROM properly onto the main module.**

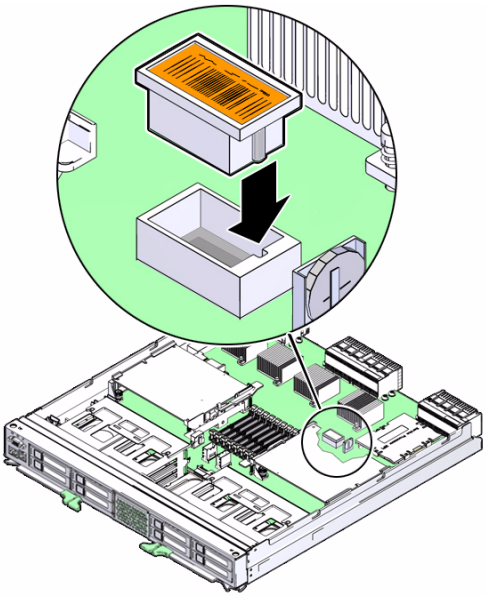

2. **Press down on the system configuration PROM until it is completely seated on the main module.**

3. **Insert the main module back into the server.**

   See "Install the Main Module" on page 72.

4. **Verify that the banner display includes an Ethernet address, and Host ID value.**

   The Ethernet address and Host ID values are read from the System Configuration PROM. Their presence in the banner verifies that the service processor and the host can read the System Configuration PROM.

```
.
.
.
SPARC T3-4, No Keyboard
.
OpenBoot X.XX, 16256 MB memory available, Serial
#87304604.Ethernet address *:**:**:**:**:**, Host ID: ********
.
.
.
```

5. **For additional verification, run specific commands to display data stored in the System Configuration PROM.**

   - Use the Oracle ILOM `show` command to display the MAC address:

```
-> show /HOST macaddress
  /HOST
    Properties:
    macaddress = **:**:**:**:**:**
```

   - Use Oracle Solaris OS commands to display the `hostid` and Ethernet address:

```
# hostid
8534299c

# ifconfig -a
lo0: flags=2001000849<UP,LOOPBACK,RUNNING,MULTICAST,IPv4,VIRTUAL> mtu 8232
index 1
        inet 127.0.0.1 netmask ff000000
igb0: flags=201004843<UP,BROADCAST,RUNNING,MULTICAST,IPv4> mtu 1500 index 2
        inet 10.6.88.150 netmask fffffe00 broadcast 10.6.89.255
        ether *:**:**:**:**:**
```

Related Information

- "System Configuration PROM Overview" on page 177
- "Remove the System Configuration PROM" on page 177

Servicing the Front I/O Assembly

These topics describe service procedures for the front I/O assembly in the server.

- "Front I/O Assembly Overview" on page 183
- "Remove the Front I/O Assembly" on page 183
- "Install the Front I/O Assembly" on page 186

Front I/O Assembly Overview

The front I/O assembly consists of the following components:

- Two circuit boards (FIO and VGA boards)
- Two cables connecting the FIO and VGA circuit boards to the motherboard

Related Information

- "Remove the Front I/O Assembly" on page 183
- "Install the Front I/O Assembly" on page 186

▼ Remove the Front I/O Assembly

The front I/O assembly is a cold-service component that can be replaced only by authorized service personnel.

Caution – This procedure requires that you handle components that are sensitive to electrostatic discharge. This discharge can cause server components to fail.

1. **Remove the main module from the server.**

   See "Remove the Main Module" on page 70.

2. **Take the necessary ESD precautions.**

   See "Prevent ESD Damage" on page 69.

3. **Locate the front I/O assembly on the main module.**

   See "Main Module Components" on page 3.

4. **Locate the two cables that connect the front I/O assembly to the motherboard.**

FIGURE: Locating the Two Front I/O Cable Assembly Cables

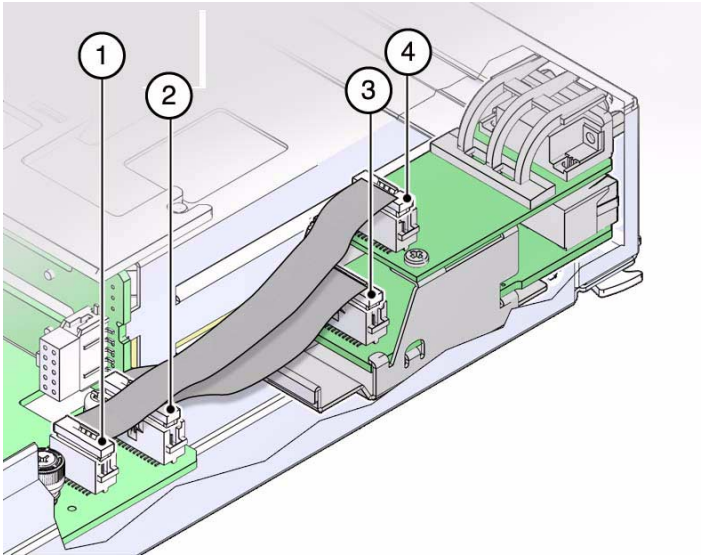

Figure Legend

1	VGA-to-motherboard cable, motherboard connection
2	FIO-to-motherboard cable, motherboard connection
3	FIO-to-motherboard cable, front I/O assembly connection
4	VGA-to-motherboard cable, front I/O assembly connection

5. **Disconnect the two cables.**

   a. **Lift up on the connectors that secure the VGA-to-motherboard cable to the front I/O assembly and the motherboard, and remove the VGA-to-motherboard cable from the main module.**

b. **Lift up on the connectors that secure the FIO-to-motherboard cable to the front I/O assembly and the motherboard, and remove the FIO-to-motherboard cable from the main module.**

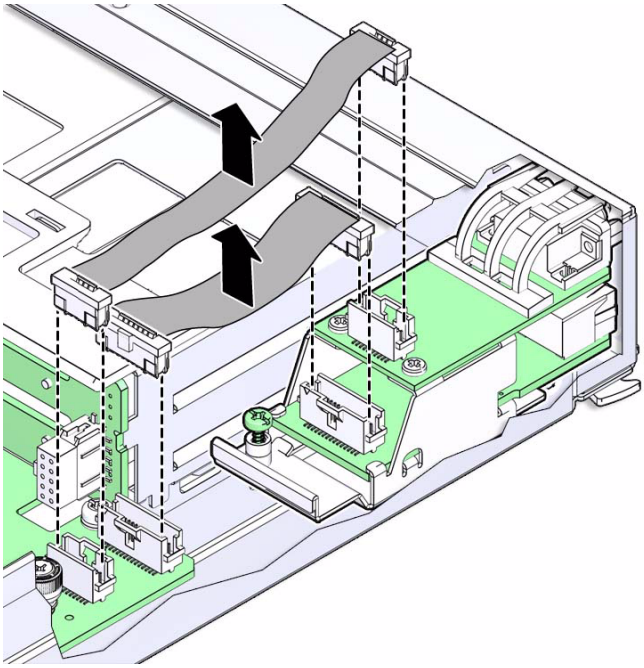

6. **Loosen the captive screw that secures the front I/O assembly to the motherboard.**

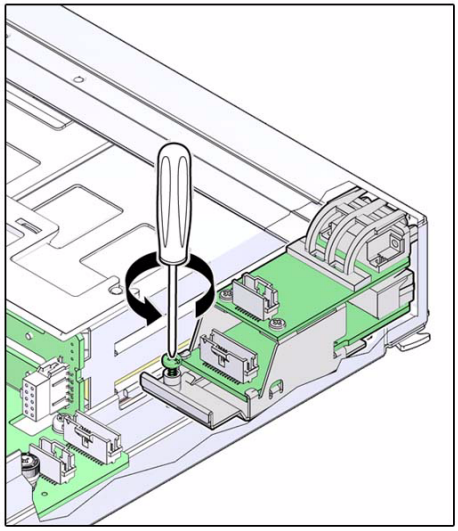

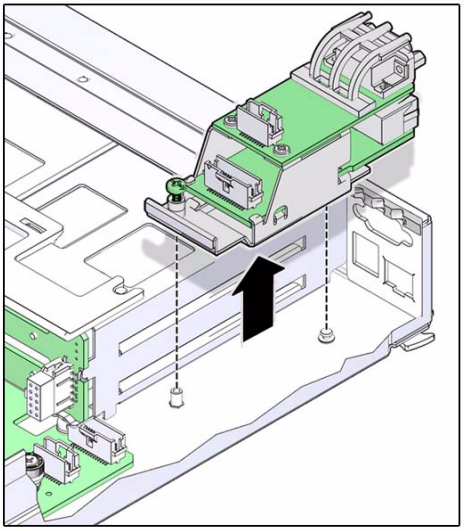

7. **Gently pull the front I/O assembly toward the back of the main module until the ports at the front of the assembly clear the front of the main module, and then remove the front I/O assembly from the main module.**

Related Information

- "Front I/O Assembly Overview" on page 183
- "Install the Front I/O Assembly" on page 186

▼ Install the Front I/O Assembly

Caution – This procedure requires that you handle components that are sensitive to static discharge. Static discharges can cause the components to fail.

1. **Take the necessary ESD precautions.**

   See "Prevent ESD Damage" on page 69.

2. **Insert the front I/O assembly into position in the main module.**
   - Gently slide the front I/O assembly into position with the ports inserted into the port holes in the front of the main module.
   - Lower the rear of the front I/O assembly so that the captive screw is aligned with the screw hole on the motherboard.

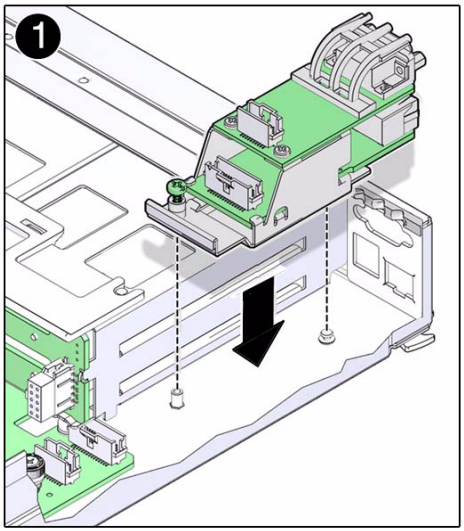

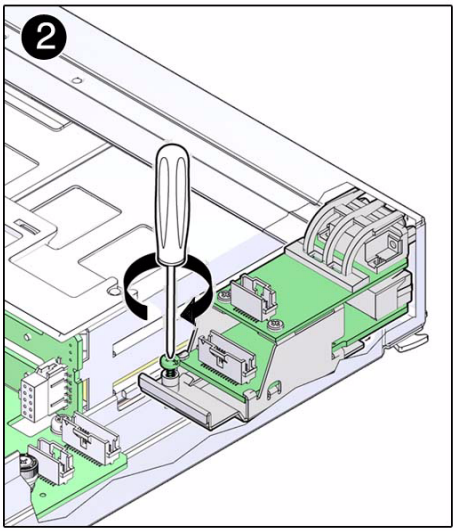

3. **Tighten the captive screw to secure the front I/O assembly to the motherboard.**

4. **Connect the two cables.**

   a. **Lower into place the connectors that secure the FIO-to-motherboard cable to the front I/O assembly and the motherboard and press down on both connectors to connect the FIO-to-motherboard cable.**

   b. **Lower into place the connectors that secure the VGA-to-motherboard cable to the front I/O assembly and the motherboard and press down on both connectors to connect the VGA-to-motherboard cable.**

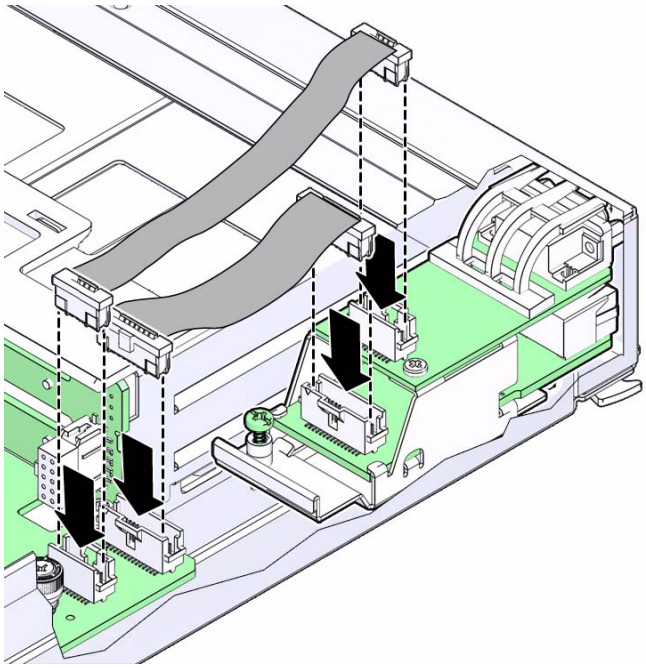

5. **Install the main module back into the server.**

   See "Install the Main Module" on page 72.

Related Information

- "Front I/O Assembly Overview" on page 183
- "Remove the Front I/O Assembly" on page 183

Servicing the Storage Backplane

These topics describe service procedures for the storage backplane in the server.

▼ Remove a Storage Backplane

A storage backplane is a cold-service component that can be replaced only by authorized service personnel.

1. **Power off the system.**

   See "Removing Power From the System" on page 66.

2. **Remove all the hard drives from the front of the server for the storage backplane that you want to replace.**

   You have to remove only hard drives 0–3 or drives 4–7, depending on which storage backplane you want to replace. Also, note the locations of the drives before removing them so that you can install them in their original slots afterwards. See "Remove a Hard Drive" on page 112.

3. **Remove the main module from the server.**

   See "Remove the Main Module" on page 70.

4. **Take the necessary ESD precautions.**

   See "Prevent ESD Damage" on page 69.

5. **Locate the storage backplane that you want to remove.**

FIGURE: Locating the Storage Backplanes

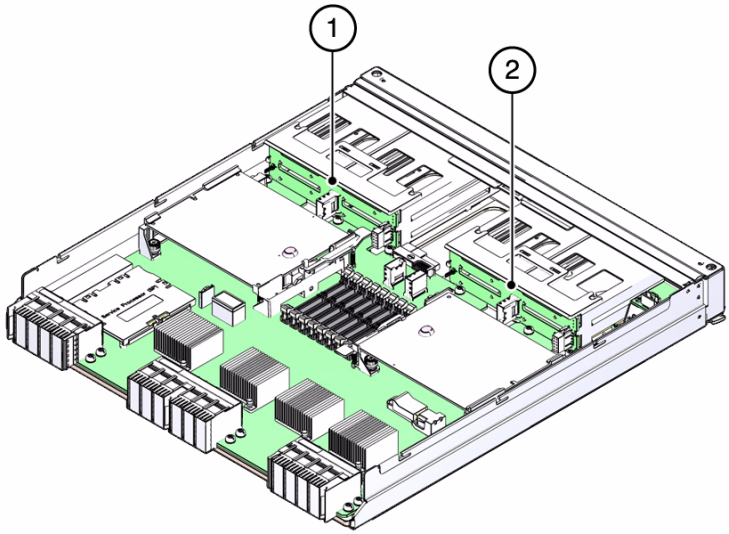

Figure Legend

1	Storage backplane for drives 4–7 (SAS_BP1)	**2**	Storage backplane for drives 0–3 (SAS_BP0)

6. **Disconnect the two storage backplane cables from the storage backplane that you want to replace.**

   a. **Lift up on the connectors that secure the data cable to the storage backplane and the motherboard, and remove the data cable from the main module.**

   b. **Lift up on the connectors that secure the power cable to the storage backplane and the motherboard, and remove the power cable from the main module.**

FIGURE: Disconnecting the Storage Backplane Cables

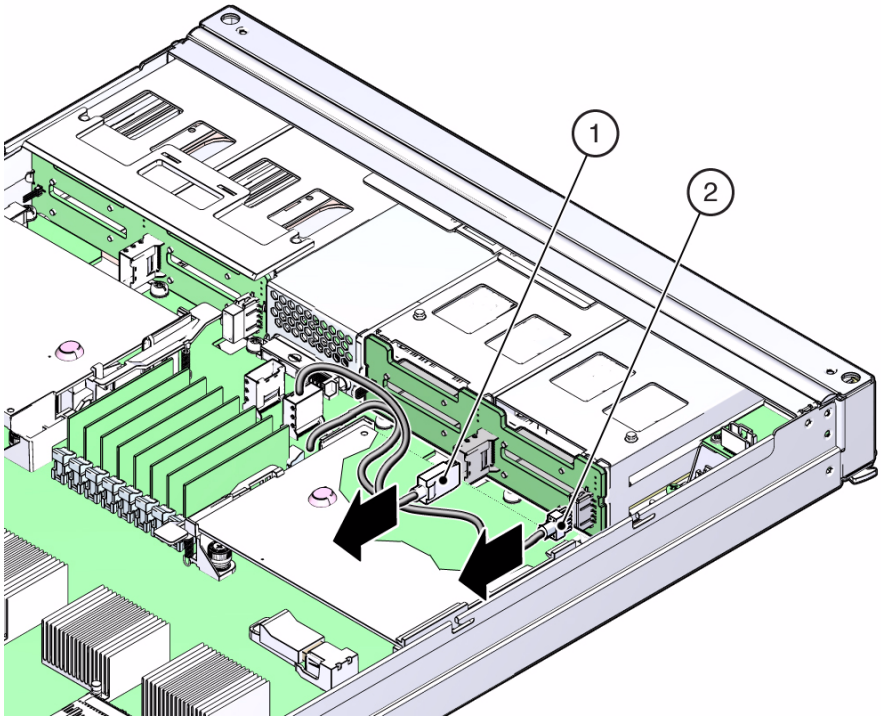

Figure Legend

1	Data cable, storage backplane connection
2	Power cable, storage backplane connection

7. **Lift up on the plastic retaining panel for the storage backplane that you want to remove to disengage the plastic panel from the top of the hard drive assembly.**

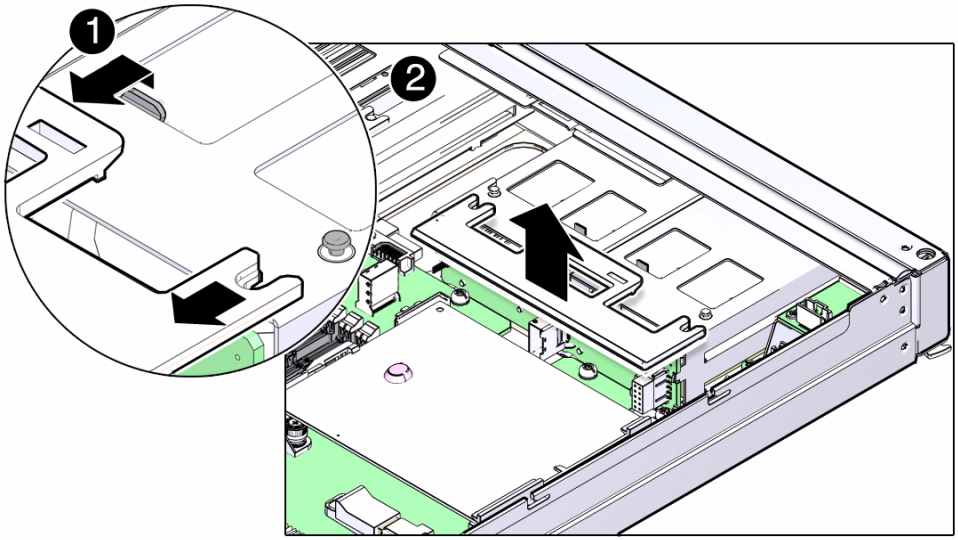

8. **Push the plastic panel toward the rear of the main module, and remove the plastic panel from the main module.**

9. **Push the top edge of the storage backplane slightly toward the rear of the main module, then lift the storage backplane up and remove it from the main module.**

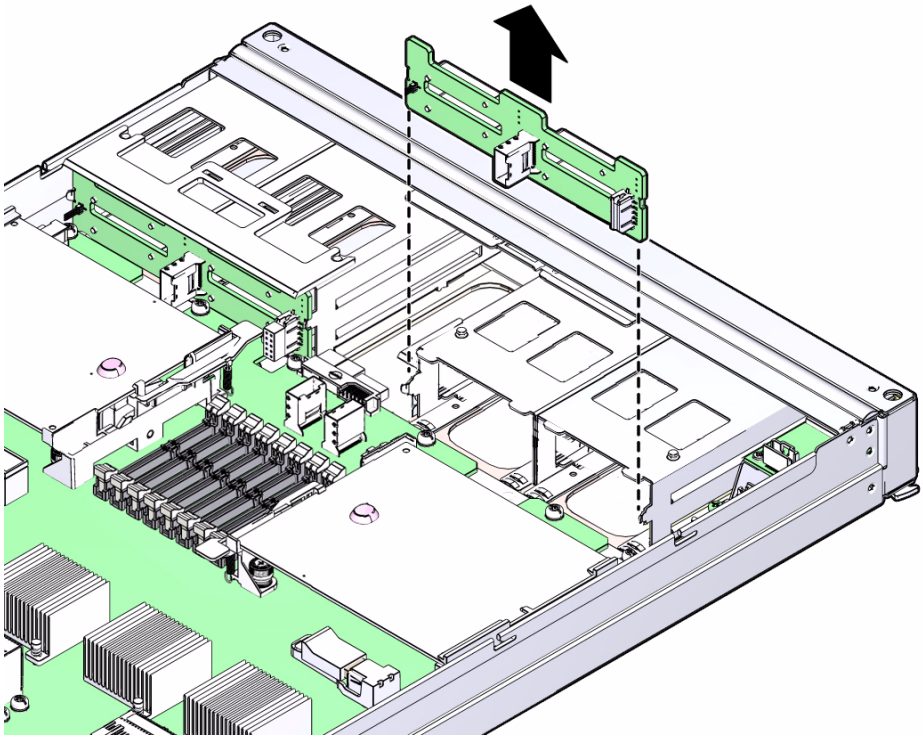

Related Information

- "Install a Storage Backplane" on page 193

▼ Install a Storage Backplane

1. **Position the storage backplane in the main module.**
2. **Lower the storage backplane into place.**

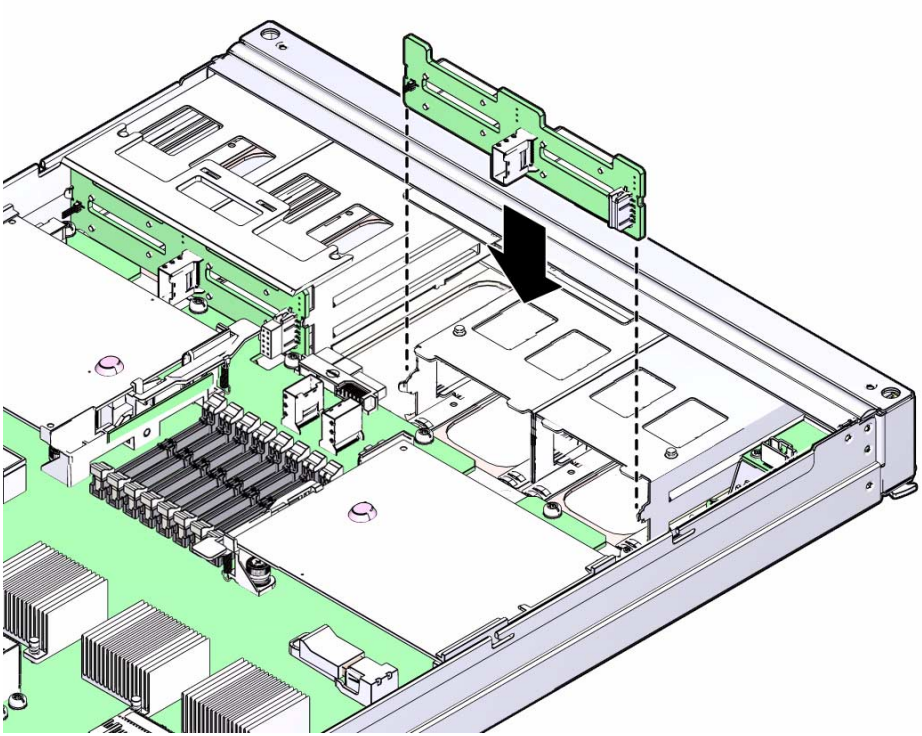

3. **Slide the plastic retaining panel into place over the storage backplane so that the two notches in the panel slide underneath the two metal mounting studs on the hard drive assembly.**

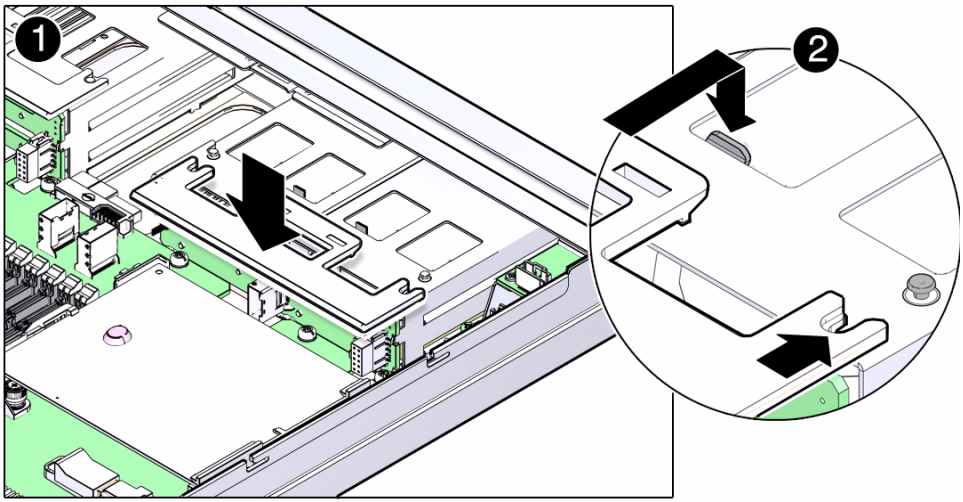

4. **Press on the press point on the retaining panel to secure it to the top of the hard drive assembly.**

5. **Connect the two storage backplane cables to the storage backplane and the motherboard.**

   a. **Connect the data cable to the storage backplane and the motherboard.**

   b. **Connect the power cable to the storage backplane and the motherboard.**

FIGURE: Connecting the Storage Backplane Cables

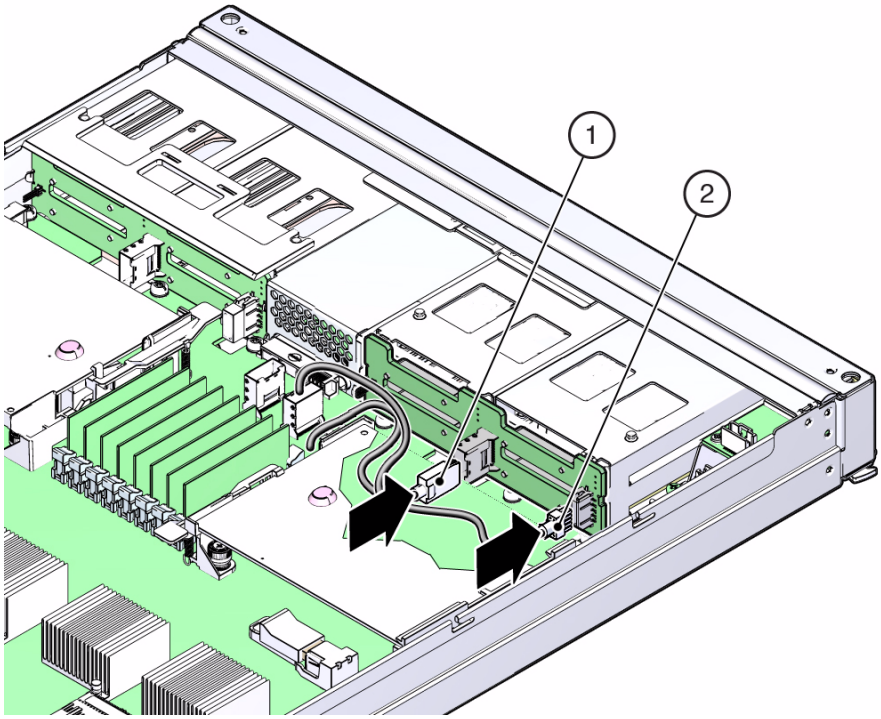

Figure Legend

1	Data cable, storage backplane connection
2	Power cable, storage backplane connection

6. **Insert the main module back into the server.**

   See "Install the Main Module" on page 72.

7. **Install the hard drives that you removed back into the main module.**

   Refer to the notes that you took when removing the hard drives to install them back into their original slots. See "Install a Hard Drive" on page 115.

8. **Power on the system.**

   See "Returning the Server to Operation" on page 209.

Related Information

- "Remove a Storage Backplane" on page 189

Servicing the Main Module Motherboard

These topics describe service procedures for the main module motherboard in the server.

Main Module Motherboard Overview

When replacing the main module motherboard, remove the service processor and System Configuration PROM from the old motherboard and install these components on the new motherboard. The service processor contains the Oracle ILOM system configuration data and the System Configuration PROM contains the system host ID and MAC address. Transferring these components will preserve the system-specific information stored on these modules.

System firmware consists of two components: a service processor component and a host component. The service processor component is located on the service processor and the host component is located on the motherboard. In order for the system to operate correctly, these two components must be compatible.

After replacing the motherboard, the host firmware on the motherboard might be incompatible with the service processor firmware on the service processor that you transferred to the new motherboard. In this case, the system firmware must be loaded as described in "Install the Main Module Motherboard" on page 201.

Related Information

- "Main Module Motherboard LEDs" on page 198
- "Locate a Faulty Main Module Motherboard" on page 199
- "Remove the Main Module Motherboard" on page 200
- "Install the Main Module Motherboard" on page 201
- "Verify Main Module Motherboard Functionality" on page 203

Main Module Motherboard LEDs

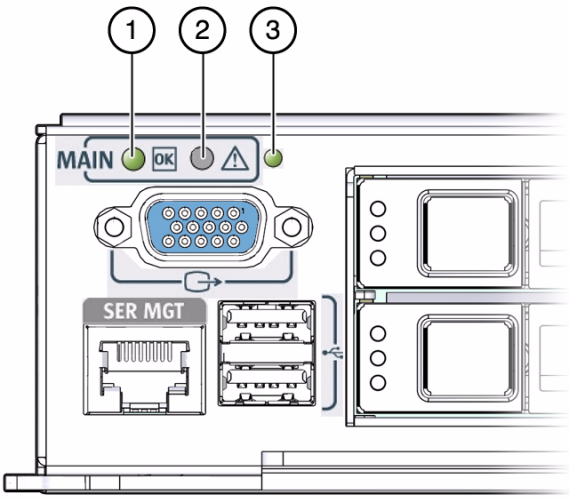

No.	LED	Icon	Description
1	OK (green)	OK	Indicates if the main module is available for use. • On – The server is running and the main module is powered up. • Off – The server is powered down and the main module is in standby mode.
2	Service Required (amber)	⚠	Indicates that the main module motherboard has experienced a fault condition.

No.	LED	Icon	Description
3	Service Processor LED	SP	Indicates the following conditions: • Off – Indicates the AC power might have been connected to the power supplies. • Steady on, green – Service processor is running in its normal operating state. No service actions are required. • Blink, green – Service processor is initializing the ILOM firmware. • Steady on, amber – A service processor error has occurred and service is required.

Related Information

- "Main Module Motherboard Overview" on page 197
- "Locate a Faulty Main Module Motherboard" on page 199
- "Remove the Main Module Motherboard" on page 200
- "Install the Main Module Motherboard" on page 201
- "Verify Main Module Motherboard Functionality" on page 203

▼ Locate a Faulty Main Module Motherboard

The following LEDs are lit when a main module motherboard fault is detected:

- System Service Required LEDs on the front panel and rear I/O module
- Service Required LED on the main module

1. **Determine if the System Service Required LEDs are lit on the front panel or the rear I/O module.**

   See "Interpreting Diagnostic LEDs" on page 16.

2. **From the front of the server, check the main module LEDs to determine if the main module motherboard needs to be replaced.**

   See "Main Module Motherboard LEDs" on page 198. The amber Service Required LED will be lit on the main module if the main module motherboard needs to be replaced.

3. **Remove the main module and replace the main module motherboard.**

   See "Remove the Main Module Motherboard" on page 200.

Related Information

- "Main Module Motherboard Overview" on page 197
- "Main Module Motherboard LEDs" on page 198
- "Remove the Main Module Motherboard" on page 200
- "Install the Main Module Motherboard" on page 201
- "Verify Main Module Motherboard Functionality" on page 203

▼ Remove the Main Module Motherboard

The main module motherboard is a cold-service component that can be replaced only by authorized service personnel.

1. **Remove the main module from the server.**

   See "Remove the Main Module" on page 70.

2. **Make a note of the locations of the components in the main module before removing any of them.**

   The system software keeps track of the location of some components, such as the hard drives and RAID expansion modules, so you might have to reinstall the software on some components if they are moved to different locations in the main module. Make a note of the location of the components in the main module and install these components in the same locations in the new main module so that you do not have to reinstall software on any of these components.

3. **Take the necessary ESD precautions.**

   See "Prevent ESD Damage" on page 69.

4. **Remove the following components from the main module:**

   - "Remove a Hard Drive" on page 112
   - "Remove the RAID Expansion Module" on page 131
   - "Remove the Service Processor" on page 136
   - "Remove the System Battery" on page 141
   - "Remove the Front I/O Assembly" on page 183
   - "Remove a Storage Backplane" on page 189

5. **Remove the system configuration PROM from the faulty motherboard.**

   See "Remove the System Configuration PROM" on page 177. Put the system configuration PROM aside to install it on the replacement motherboard.

6. **Install the replacement motherboard in the server.**

   See "Install the Main Module Motherboard" on page 201.

Related Information

- "Main Module Motherboard Overview" on page 197
- "Main Module Motherboard LEDs" on page 198
- "Locate a Faulty Main Module Motherboard" on page 199
- "Install the Main Module Motherboard" on page 201
- "Verify Main Module Motherboard Functionality" on page 203

▼ Install the Main Module Motherboard

1. **Install the system configuration PROM from the old motherboard onto the replacement motherboard.**

   See "Install the System Configuration PROM" on page 179.

2. **Replace these components on the main module:**

   - "Install a Storage Backplane" on page 193
   - "Install the Front I/O Assembly" on page 186
   - "Install the System Battery" on page 142
   - "Install the Service Processor" on page 138
   - "Install the RAID Expansion Module" on page 132
   - "Install a Hard Drive" on page 115

   Install the components in the same slots that you removed them from in the old main module to keep from having to reinstall software on these components.

3. **Insert the main module back into the server.**

   See "Install the Main Module" on page 72.

4. **Connect a terminal or a terminal emulator (PC or workstation) to serial management port.**

   If the service processor detects that the new host firmware component is incompatible with service processor firmware domponent, further action will be suspended and the following message will be delivered over the serial management port.

```
Unrecognized Chassis: This module is installed in an unknown or
unsupported chassis. You must upgrade the firmware to a newer
version that supports this chassis.
```

   If you see this message, go on to Step 5.

5. **Download the system firmware.**

   a. **If needed, configure the service processor's network port to enable the firmware image to be downloaded.**

      Refer to the Oracle ILOM documentation for network configuration instructions.

   b. **Download the system firmware.**

      Follow the firmware download instructions in the Oracle ILOM documentation.

Note – You can load any supported system firmware version, including the firmware revision that had been installed prior to the replacement of the motherboard.

---

6. **Verify the main module motherboard.**

   See "Verify Main Module Motherboard Functionality" on page 203.

Related Information

- "Main Module Motherboard Overview" on page 197
- "Main Module Motherboard LEDs" on page 198
- "Locate a Faulty Main Module Motherboard" on page 199
- "Remove the Main Module Motherboard" on page 200
- "Verify Main Module Motherboard Functionality" on page 203

▼ Verify Main Module Motherboard Functionality

1. **Verify that the OK LED is lit on the main module and that the Fault LED is not lit.**

   See "Main Module Motherboard LEDs" on page 198.

2. **Verify that the front and rear Service Required LEDs are not lit.**

   See "Interpreting Diagnostic LEDs" on page 16.

3. **Perform one of the following tasks based on your verification results:**
   - If the previous steps did not clear the fault, see "Diagnostics Process" on page 12.
   - If the previous steps indicate that no faults have been detected, then the main module motherboard has been replaced successfully. No further action is required.

Related Information

- "Main Module Motherboard Overview" on page 197
- "Main Module Motherboard LEDs" on page 198
- "Locate a Faulty Main Module Motherboard" on page 199
- "Remove the Main Module Motherboard" on page 200
- "Install the Main Module Motherboard" on page 201

Servicing the Rear Chassis Subassembly

These topics describe service procedures for the rear chassis subassembly in the server.

Rear Chassis Subassembly Overview

The rear chassis subassembly is a single FRU that contains the following components:

- Midplane
- Express backplane
- Power distribution board
- AC and DC bus bars

Related Information

- "Remove the Rear Chassis Subassembly" on page 205
- "Install the Rear Chassis Subassembly" on page 207

▼ Remove the Rear Chassis Subassembly

The rear chassis assembly is a cold-service component that can be replaced only by authorized service personnel.

1. **Verify that the rear chassis subassembly needs to be replaced.**

   Use the server software to determine if the rear chassis subassembly needs to be replaced. See "Detecting and Managing Faults" on page 11 for more information.

2. **Power down the server.**

   See "Removing Power From the System" on page 66.

3. **Go to the rear of the server and remove the following components from the rear chassis subassembly:**

   - All five fans—see "Remove a Fan Module" on page 150.
   - All express modules or filler panels—see "Remove an Express Module" on page 164. Make note of the slots for each express module or filler panel so that you can install them into the same slots in the replacement rear chassis subassembly.
   - Rear I/O module—see "Remove the Rear I/O Module" on page 172.

   You will install these components into the replacement rear chassis subassembly once you have replaced the faulty subassembly.

4. **Locate the four green mounting screws for the rear chassis subassembly.**

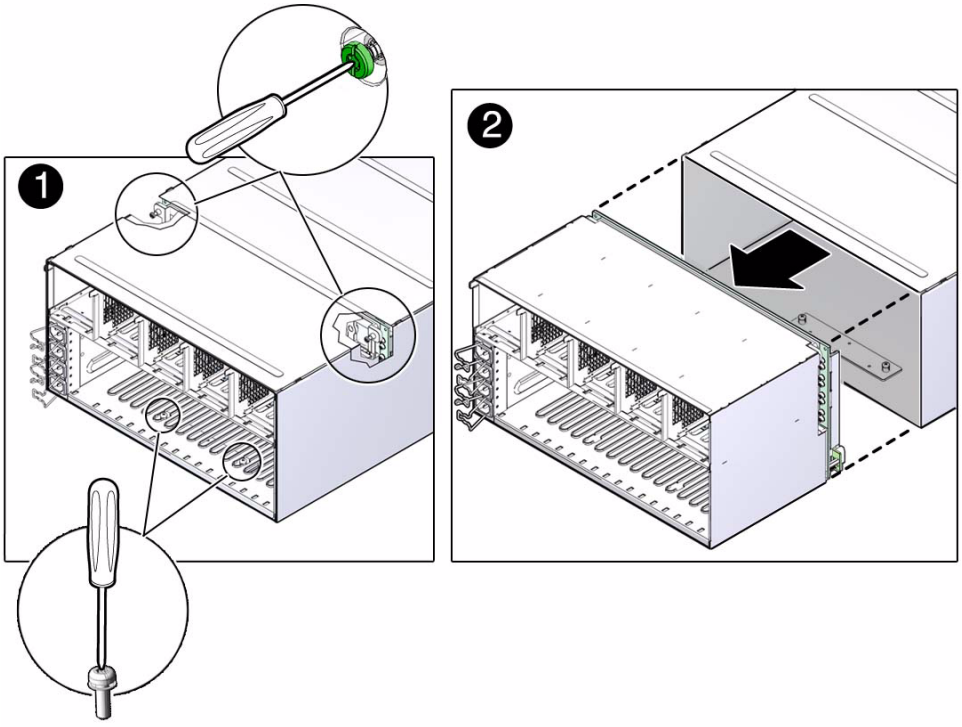

5. **Using a Phillips screwdriver, loosen the four screws that secure the rear chassis subassembly to the system.**

6. **Slide the rear chassis subassembly out and away from the server.**

Related Information

- "Rear Chassis Subassembly Overview" on page 205
- "Install the Rear Chassis Subassembly" on page 207

▼ Install the Rear Chassis Subassembly

1. **Slide the rear chassis subassembly into the server.**

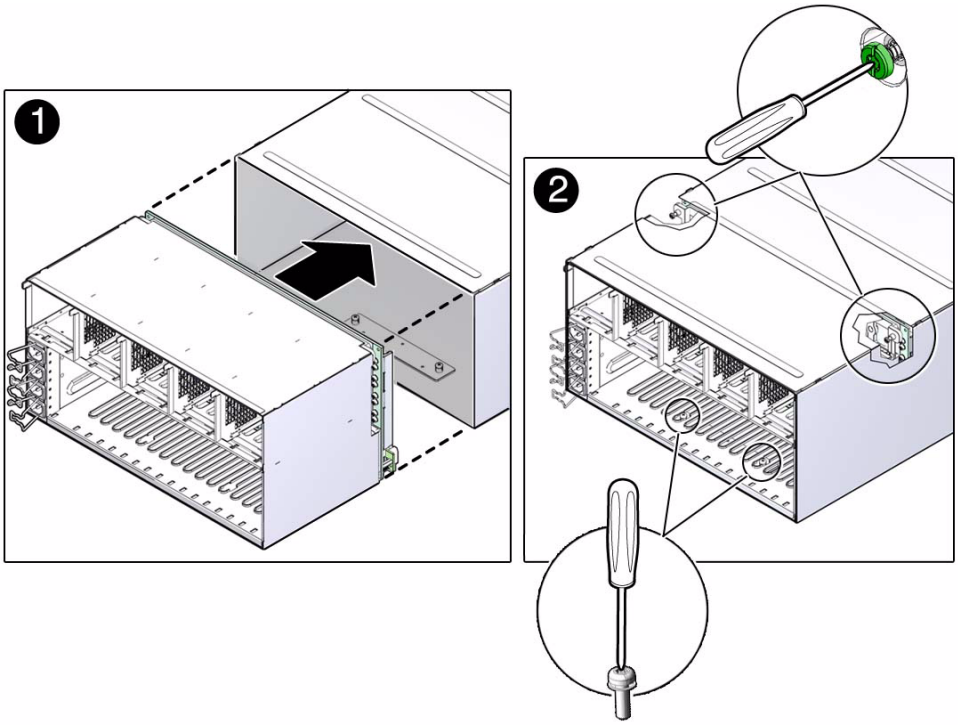

2. **Using a Phillips screwdriver, tighten the four green screws to secure the rear chassis subassembly in the server.**

3. **Install the following components back into the rear of the server:**
   - All five fans—see "Install a Fan Module" on page 152.

- All express modules or filler panels—see "Install an Express Module" on page 166. Verify that you are installing the express modules back in their original slots using the notes that you took when removing the cards from the slots earlier.
- Rear I/O module—see "Install the Rear I/O Module" on page 173.

4. **Power on the server.**

   See "Returning the Server to Operation" on page 209.

Related Information

- "Rear Chassis Subassembly Overview" on page 205
- "Remove the Rear Chassis Subassembly" on page 205

Returning the Server to Operation

These topics explain how to return the SPARC T3-4 server from Oracle to operation after you have performed service procedures.

- "Connect Power Cords to the Server" on page 209
- "Power On the Server (start /SYS Command)" on page 209
- "Power On the Server (Power Button)" on page 210

▼ Connect Power Cords to the Server

- **Reconnect the power cords to the power supplies.**

Note – As soon as the power cords are connected, standby power is applied. Depending on how the firmware is configured, the system might boot at this time.

Related Information

- "Power On the Server (start /SYS Command)" on page 209
- "Power On the Server (Power Button)" on page 210

▼ Power On the Server (`start /SYS` Command)

- **Type `start /SYS` at the service processor prompt.**

```
-> start /SYS
```

Related Information

- "Power On the Server (Power Button)" on page 210

▼ Power On the Server (Power Button)

- **Momentarily press and release the Power button on the front panel.**

  See "Front Panel System Controls and LEDs" on page 16 for the location of the Power button.

Related Information

- "Power On the Server (start /SYS Command)" on page 209

Index

L

M

N

O

P

Q

R

S

T

U

V