man pages section 9F: DDI and DKI Kernel Functions

Sun Microsystems, Inc.
4150 Network Circle
Santa Clara, CA 95054
U.S.A.

Part No: 817–5427–10
February 2004

Adobe PostScript

031212@7518

Contents

Preface

Both novice users and those familar with the SunOS operating system can use online man pages to obtain information about the system and its features. A man page is intended to answer concisely the question “What does it do?” The man pages in general comprise a reference manual. They are not intended to be a tutorial.

Overview

The following contains a brief description of each man page section and the information it references:

- Section 1 describes, in alphabetical order, commands available with the operating system.
- Section 1M describes, in alphabetical order, commands that are used chiefly for system maintenance and administration purposes.
- Section 2 describes all of the system calls. Most of these calls have one or more error returns. An error condition is indicated by an otherwise impossible returned value.
- Section 3 describes functions found in various libraries, other than those functions that directly invoke UNIX system primitives, which are described in Section 2.
- Section 4 outlines the formats of various files. The C structure declarations for the file formats are given where applicable.
- Section 5 contains miscellaneous documentation such as character-set tables.
- Section 6 contains available games and demos.
- Section 7 describes various special files that refer to specific hardware peripherals and device drivers. STREAMS software drivers, modules and the STREAMS-generic set of system calls are also described.

- Section 9 provides reference information needed to write device drivers in the kernel environment. It describes two device driver interface specifications: the Device Driver Interface (DDI) and the Driver/Kernel Interface (DKI).
- Section 9E describes the DDI/DKI, DDI-only, and DKI-only entry-point routines a developer can include in a device driver.
- Section 9F describes the kernel functions available for use by device drivers.
- Section 9S describes the data structures used by drivers to share information between the driver and the kernel.

Below is a generic format for man pages. The man pages of each manual section generally follow this order, but include only needed headings. For example, if there are no bugs to report, there is no BUGS section. See the `intro` pages for more information and detail about each section, and `man`(1) for more information about man pages in general.

NAME

This section gives the names of the commands or functions documented, followed by a brief description of what they do.

SYNOPSIS

This section shows the syntax of commands or functions. When a command or file does not exist in the standard path, its full path name is shown. Options and arguments are alphabetized, with single letter arguments first, and options with arguments next, unless a different argument order is required.

The following special characters are used in this section:

[ ] Brackets. The option or argument enclosed in these brackets is optional. If the brackets are omitted, the argument must be specified.

. . . Ellipses. Several values can be provided for the previous argument, or the previous argument can be specified multiple times, for example, "`filename . . .`" .

| Separator. Only one of the arguments separated by this character can be specified at a time.

{ } Braces. The options and/or arguments enclosed within braces are interdependent, such that everything enclosed must be treated as a unit.

PROTOCOL	This section occurs only in subsection 3R to indicate the protocol description file.
DESCRIPTION	This section defines the functionality and behavior of the service. Thus it describes concisely what the command does. It does not discuss OPTIONS or cite EXAMPLES. Interactive commands, subcommands, requests, macros, and functions are described under USAGE.
IOCTL	This section appears on pages in Section 7 only. Only the device class that supplies appropriate parameters to the `ioctl`(2) system call is called `ioctl` and generates its own heading. `ioctl` calls for a specific device are listed alphabetically (on the man page for that specific device). `ioctl` calls are used for a particular class of devices all of which have an `io` ending, such as `mtio`(7I).
OPTIONS	This secton lists the command options with a concise summary of what each option does. The options are listed literally and in the order they appear in the SYNOPSIS section. Possible arguments to options are discussed under the option, and where appropriate, default values are supplied.
OPERANDS	This section lists the command operands and describes how they affect the actions of the command.
OUTPUT	This section describes the output – standard output, standard error, or output files – generated by the command.
RETURN VALUES	If the man page documents functions that return values, this section lists these values and describes the conditions under which they are returned. If a function can return only constant values, such as 0 or –1, these values are listed in tagged paragraphs. Otherwise, a single paragraph describes the return values of each function. Functions declared void do not return values, so they are not discussed in RETURN VALUES.
ERRORS	On failure, most functions place an error code in the global variable `errno` indicating why they failed. This section lists alphabetically all error codes a function can generate and describes the conditions that cause each error. When more than

	one condition can cause the same error, each condition is described in a separate paragraph under the error code.
USAGE	This section lists special rules, features, and commands that require in-depth explanations. The subsections listed here are used to explain built-in functionality: Commands Modifiers Variables Expressions Input Grammar
EXAMPLES	This section provides examples of usage or of how to use a command or function. Wherever possible a complete example including command-line entry and machine response is shown. Whenever an example is given, the prompt is shown as `example%`, or if the user must be superuser, `example#`. Examples are followed by explanations, variable substitution rules, or returned values. Most examples illustrate concepts from the SYNOPSIS, DESCRIPTION, OPTIONS, and USAGE sections.
ENVIRONMENT VARIABLES	This section lists any environment variables that the command or function affects, followed by a brief description of the effect.
EXIT STATUS	This section lists the values the command returns to the calling program or shell and the conditions that cause these values to be returned. Usually, zero is returned for successful completion, and values other than zero for various error conditions.
FILES	This section lists all file names referred to by the man page, files of interest, and files created or required by commands. Each is followed by a descriptive summary or explanation.
ATTRIBUTES	This section lists characteristics of commands, utilities, and device drivers by defining the attribute type and its corresponding value. See `attributes`(5) for more information.
SEE ALSO	This section lists references to other man pages, in-house documentation, and outside publications.

DIAGNOSTICS	This section lists diagnostic messages with a brief explanation of the condition causing the error.
WARNINGS	This section lists warnings about special conditions which could seriously affect your working conditions. This is not a list of diagnostics.
NOTES	This section lists additional information that does not belong anywhere else on the page. It takes the form of an aside to the user, covering points of special interest. Critical information is never covered here.
BUGS	This section describes known bugs and, wherever possible, suggests workarounds.

Introduction

NAME

Intro – introduction to DDI/DKI functions

DESCRIPTION

Section 9F describes the kernel functions available for use by device drivers.

In this section, the information for each driver function is organized under the following headings:

- `NAME` summarizes the function's purpose.
- `SYNOPSIS` shows the syntax of the function's entry point in the source code. `#include` directives are shown for required headers.
- `INTERFACE LEVEL` describes any architecture dependencies.
- `ARGUMENTS` describes any arguments required to invoke the function.
- `DESCRIPTION` describes general information about the function.
- `RETURN VALUES` describes the return values and messages that can result from invoking the function.
- `CONTEXT` indicates from which driver context (user, kernel, interrupt, or high-level interrupt) the function can be called.
- A driver function has *user context* if it was directly invoked because of a user thread. The `read`(9E) entry point of the driver, invoked by a `read`(2) system call, has user context.
- A driver function has *kernel context* if was invoked by some other part of the kernel. In a block device driver, the `strategy`(9E) entry point may be called by the page daemon to write pages to the device. The page daemon has no relation to the current user thread, so in this case `strategy`(9E) has kernel context.
- *Interrupt context* is kernel context, but also has an interrupt level associated with it. Driver interrupt routines have interrupt context.
- *High-level interrupt context* is a more restricted form of interrupt context. If `ddi_intr_hilevel`(9F) indicates that an interrupt is high-level, driver interrupt routines added for that interrupt with `ddi_add_intr`(9F) run in high-level interrupt context. These interrupt routines are only allowed to call `ddi_trigger_softintr`(9F) `mutex_enter`(9F) and `mutex_exit`(9F). Furthermore, `mutex_enter`(9F) and `mutex_exit`(9F) may only be called on mutexes initialized with the `ddi_iblock_cookie` returned by `ddi_get_iblock_cookie`(9F).
- `SEE ALSO` indicates functions that are related by usage and sources, and which can be referred to for further information.
- `EXAMPLES` shows how the function can be used in driver code.

Every driver MUST include `<sys/ddi.h>` and `<sys/sunddi.h>`, in that order, and as the last files the driver includes.

STREAMS Kernel Function Summary

The following table summarizes the STREAMS functions described in this section.

Routine	Type
adjmsg	DDI/DKI
allocb	DDI/DKI
backq	DDI/DKI
bcanput	DDI/DKI
bcanputnext	DDI/DKI
bufcall	DDI/DKI
canput	DDI/DKI
canputnext	DDI/DKI
clrbuf	DDI/DKI
copyb	DDI/DKI
copymsg	DDI/DKI
datamsg	DDI/DKI
dupb	DDI/DKI
dupmsg	DDI/DKI
enableok	DDI/DKI
esballoc	DDI/DKI
esbbcall	DDI/DKI
flushband	DDI/DKI
flushq	DDI/DKI
freeb	DDI/DKI
freemsg	DDI/DKI
freezestr	DDI/DKI
getq	DDI/DKI
insq	DDI/DKI
linkb	DDI/DKI
msgdsize	DDI/DKI
msgpullup	DDI/DKI
mt-streams	Solaris DDI
noenable	DDI/DKI

Routine	Type
OTHERQ	DDI/DKI
pullupmsg	DDI/DKI
put	DDI/DKI
putbq	DDI/DKI
putctl	DDI/DKI
putctl1	DDI/DKI
putnext	DDI/DKI
putnextctl	DDI/DKI
putq	DDI/DKI
qbufcall	Solaris DDI
qenable	DDI/DKI
qprocson	DDI/DKI
qprocsoff	DDI/DKI
qreply	DDI/DKI
qsize	DDI/DKI
qtimeout	Solaris DDI
qunbufcall	Solaris DDI
quntimeout	Solaris DDI
qwait	Solaris DDI
qwait_sig	Solaris DDI
qwriter	Solaris DDI
RD	DDI/DKI
rmvb	DDI/DKI
rmvq	DDI/DKI
SAMESTR	DDI/DKI
strlog	DDI/DKI
strqget	DDI/DKI
strqset	DDI/DKI
testb	DDI/DKI

Routine	Type
unbufcall	DDI/DKI
unfreezestr	DDI/DKI
unlinkb	DDI/DKI
WR	DDI/DKI

The following table summarizes the functions not specific to STREAMS.

Routine	Type
ASSERT	DDI/DKI
anocancel	Solaris DDI
aphysio	Solaris DDI
bcmp	DDI/DKI
bcopy	DDI/DKI
biodone	DDI/DKI
bioclone	Solaris DDI
biofini	Solaris DDI
bioinit	Solaris DDI
biomodified	Solaris DDI
biosize	Solaris DDI
bioerror	Solaris DDI
bioreset	Solaris DDI
biowait	DDI/DKI
bp_mapin	DDI/DKI
bp_mapout	DDI/DKI
btop	DDI/DKI
btopr	DDI/DKI
bzero	DDI/DKI
cmn_err	DDI/DKI
copyin	DDI/DKI
copyout	DDI/DKI

Routine	Type
cv_broadcast	Solaris DDI
cv_destroy	Solaris DDI
cv_init	Solaris DDI
cv_signal	Solaris DDI
cv_timedwait	Solaris DDI
cv_wait	Solaris DDI
cv_wait_sig	Solaris DDI
ddi_add_intr	Solaris DDI
ddi_add_softintr	Solaris DDI
ddi_btop	Solaris DDI
ddi_btopr	Solaris DDI
ddi_copyin	Solaris DDI
ddi_copyout	Solaris DDI
ddi_create_minor_node	Solaris DDI
ddi_dev_is_sid	Solaris DDI
ddi_dev_nintrs	Solaris DDI
ddi_dev_nregs	Solaris DDI
ddi_dev_regsize	Solaris DDI
ddi_device_copy	Solaris DDI
ddi_device_zero	Solaris DDI
ddi_devmap_segmap	Solaris DDI
ddi_dma_addr_bind_handle	Solaris DDI
ddi_dma_addr_setup	Solaris DDI
ddi_dma_alloc_handle	Solaris DDI
ddi_dma_buf_bind_handle	Solaris DDI
ddi_dma_buf_setup	Solaris DDI
ddi_dma_burstsizes	Solaris DDI
ddi_dma_coff	Solaris SPARC DDI
ddi_dma_curwin	Solaris SPARC DDI

Routine	Type
ddi_dma_devalign	Solaris DDI
ddi_dma_free	Solaris DDI
ddi_dma_free_handle	Solaris DDI
ddi_dma_getwin	Solaris DDI
ddi_dma_htoc	Solaris SPARC DDI
ddi_dma_mem_alloc	Solaris DDI
ddi_dma_mem_free	Solaris DDI
ddi_dma_movwin	Solaris SPARC DDI
ddi_dma_nextcookie	Solaris DDI
ddi_dma_nextseg	Solaris DDI
ddi_dma_nextwin	Solaris DDI
ddi_dma_numwin	Solaris DDI
ddi_dma_segtocookie	Solaris DDI
ddi_dma_set_sbus64	Solaris DDI
ddi_dma_setup	Solaris DDI
ddi_dma_sync	Solaris DDI
ddi_dma_unbind_handle	Solaris DDI
ddi_dmae	Solaris IA DDI
ddi_dmae_1stparty	Solaris IA DDI
ddi_dmae_alloc	Solaris IA DDI
ddi_dmae_disable	Solaris IA DDI
ddi_dmae_enable	Solaris IA DDI
ddi_dmae_getattr	Solaris IA DDI
ddi_dmae_getcnt	Solaris IA DDI
ddi_dmae_getlim	Solaris IA DDI
ddi_dmae_prog	Solaris IA DDI
ddi_dmae_release	Solaris IA DDI
ddi_dmae_stop	Solaris IA DDI
ddi_enter_critical	Solaris DDI

Routine	Type
ddi_exit_critical	Solaris DDI
ddi_ffs	Solaris DDI
ddi_fls	Solaris DDI
ddi_get16	Solaris DDI
ddi_get32	Solaris DDI
ddi_get64	Solaris DDI
ddi_get8	Solaris DDI
ddi_get_cred	Solaris DDI
ddi_get_driver_private	Solaris DDI
ddi_get_iblock_cookie	Solaris DDI
ddi_get_instance	Solaris DDI
ddi_get_name	Solaris DDI
ddi_get_parent	Solaris DDI
ddi_get_soft_iblock_cookie	Solaris DDI
ddi_get_soft_state	Solaris DDI
ddi_getb	Solaris DDI
ddi_getl	Solaris DDI
ddi_getll	Solaris DDI
ddi_getlongprop	Solaris DDI
ddi_getlongprop_buf	Solaris DDI
ddi_getprop	Solaris DDI
ddi_getproplen	Solaris DDI
ddi_getw	Solaris DDI
ddi_intr_hilevel	Solaris DDI
ddi_io_get16	Solaris DDI
ddi_io_get32	Solaris DDI
ddi_io_get8	Solaris DDI
ddi_io_getb	Solaris DDI
ddi_io_getl	Solaris DDI

Routine	Type
ddi_io_getw	Solaris DDI
ddi_io_put16	Solaris DDI
ddi_io_put32	Solaris DDI
ddi_io_put8	Solaris DDI
ddi_io_putb	Solaris DDI
ddi_io_putl	Solaris DDI
ddi_io_putw	Solaris DDI
ddi_io_rep_get16	Solaris DDI
ddi_io_rep_get32	Solaris DDI
ddi_io_rep_get8	Solaris DDI
ddi_io_rep_getb	Solaris DDI
ddi_io_rep_getl	Solaris DDI
ddi_io_rep_getw	Solaris DDI
ddi_io_rep_put16	Solaris DDI
ddi_io_rep_put32	Solaris DDI
ddi_io_rep_put8	Solaris DDI
ddi_io_rep_putb	Solaris DDI
ddi_io_rep_putl	Solaris DDI
ddi_io_rep_putw	Solaris DDI
ddi_iomin	Solaris DDI
ddi_iopb_alloc	Solaris DDI
ddi_iopb_free	Solaris DDI
ddi_map_regs	Solaris DDI
ddi_mapdev	Solaris DDI
ddi_mapdev_intercept	Solaris DDI
ddi_mapdev_nointercept	Solaris DDI
ddi_mapdev_set_device_acc_attr	Solaris DDI
ddi_mem_alloc	Solaris DDI
ddi_mem_free	Solaris DDI

Routine	Type
ddi_mem_get16	Solaris DDI
ddi_mem_get32	Solaris DDI
ddi_mem_get64	Solaris DDI
ddi_mem_get8	Solaris DDI
ddi_mem_getb	Solaris DDI
ddi_mem_getl	Solaris DDI
ddi_mem_getll	Solaris DDI
ddi_mem_getw	Solaris DDI
ddi_mem_put16	Solaris DDI
ddi_mem_put32	Solaris DDI
ddi_mem_put64	Solaris DDI
ddi_mem_put8	Solaris DDI
ddi_mem_putb	Solaris DDI
ddi_mem_putl	Solaris DDI
ddi_mem_putll	Solaris DDI
ddi_mem_putw	Solaris DDI
ddi_mem_rep_get16	Solaris DDI
ddi_mem_rep_get32	Solaris DDI
ddi_mem_rep_get64	Solaris DDI
ddi_mem_rep_get8	Solaris DDI
ddi_mem_rep_getb	Solaris DDI
ddi_mem_rep_getl	Solaris DDI
ddi_mem_rep_getll	Solaris DDI
ddi_mem_rep_getw	Solaris DDI
ddi_mem_rep_put16	Solaris DDI
ddi_mem_rep_put32	Solaris DDI
ddi_mem_rep_put64	Solaris DDI
ddi_mem_rep_put8	Solaris DDI
ddi_mem_rep_putb	Solaris DDI

Routine	Type
ddi_mem_rep_putl	Solaris DDI
ddi_mem_rep_putll	Solaris DDI
ddi_mem_rep_putw	Solaris DDI
ddi_mmap_get_model	Solaris DDI
ddi_model_convert_from	Solaris DDI
ddi_node_name	Solaris DDI
ddi_peek16	Solaris DDI
ddi_peek32	Solaris DDI
ddi_peek64	Solaris DDI
ddi_peek8	Solaris DDI
ddi_peekc	Solaris DDI
ddi_peekd	Solaris DDI
ddi_peekl	Solaris DDI
ddi_peeks	Solaris DDI
ddi_poke16	Solaris DDI
ddi_poke32	Solaris DDI
ddi_poke64	Solaris DDI
ddi_poke8	Solaris DDI
ddi_pokec	Solaris DDI
ddi_poked	Solaris DDI
ddi_pokel	Solaris DDI
ddi_pokes	Solaris DDI
ddi_prop_create	Solaris DDI
ddi_prop_exists	Solaris DDI
ddi_prop_free	Solaris DDI
ddi_prop_get_int	Solaris DDI
ddi_prop_lookup	Solaris DDI
ddi_prop_lookup_byte_array	Solaris DDI
ddi_prop_lookup_int_array	Solaris DDI

Routine	Type
ddi_prop_lookup_string	Solaris DDI
ddi_prop_lookup_string_array	Solaris DDI
ddi_prop_modify	Solaris DDI
ddi_prop_op	Solaris DDI
ddi_prop_remove	Solaris DDI
ddi_prop_remove_all	Solaris DDI
ddi_prop_undefine	Solaris DDI
ddi_prop_update	Solaris DDI
ddi_prop_update_byte_array	Solaris DDI
ddi_prop_update_int	Solaris DDI
ddi_prop_update_int_array	Solaris DDI
ddi_prop_update_string	Solaris DDI
ddi_prop_update_string_array	Solaris DDI
ddi_ptob	Solaris DDI
ddi_put16	Solaris DDI
ddi_put32	Solaris DDI
ddi_put64	Solaris DDI
ddi_put8	Solaris DDI
ddi_putb	Solaris DDI
ddi_putl	Solaris DDI
ddi_putll	Solaris DDI
ddi_putw	Solaris DDI
ddi_regs_map_free	Solaris DDI
ddi_regs_map_setup	Solaris DDI
ddi_remove_intr	Solaris DDI
ddi_remove_minor_node	Solaris DDI
ddi_remove_softintr	Solaris DDI
ddi_rep_get16	Solaris DDI
ddi_rep_get32	Solaris DDI

Routine	Type
ddi_rep_get64	Solaris DDI
ddi_rep_get8	Solaris DDI
ddi_rep_getb	Solaris DDI
ddi_rep_getl	Solaris DDI
ddi_rep_getll	Solaris DDI
ddi_rep_getw	Solaris DDI
ddi_rep_put16	Solaris DDI
ddi_rep_put32	Solaris DDI
ddi_rep_put64	Solaris DDI
ddi_rep_put8	Solaris DDI
ddi_rep_putb	Solaris DDI
ddi_rep_putl	Solaris DDI
ddi_rep_putll	Solaris DDI
ddi_rep_putw	Solaris DDI
ddi_report_dev	Solaris DDI
ddi_root_node	Solaris DDI
ddi_segmap	Solaris DDI
ddi_segmap_setup	Solaris DDI
ddi_set_driver_private	Solaris DDI
ddi_slaveonly	Solaris DDI
ddi_soft_state	Solaris DDI
ddi_soft_state_fini	Solaris DDI
ddi_soft_state_free	Solaris DDI
ddi_soft_state_init	Solaris DDI
ddi_soft_state_zalloc	Solaris DDI
ddi_trigger_softintr	Solaris DDI
ddi_umem_alloc	Solaris DDI
ddi_umem_free	Solaris DDI
ddi_unmap_regs	Solaris DDI

Routine	Type
delay	DDI/DKI
devmap_default_access	Solaris DDI
devmap_devmem_setup	Solaris DDI
devmap_do_ctxmgt	Solaris DDI
devmap_load	Solaris DDI
devmap_set_ctx_timeout	Solaris DDI
devmap_setup	Solaris DDI
devmap_umem_setup	Solaris DDI
devmap_unload	Solaris DDI
disksort	Solaris DDI
drv_getparm	DDI/DKI
drv_hztousec	DDI/DKI
drv_priv	DDI/DKI
drv_usectohz	DDI/DKI
drv_usecwait	DDI/DKI
free_pktiopb	Solaris DDI
freerbuf	DDI/DKI
get_pktiopb	Solaris DDI
geterror	DDI/DKI
getmajor	DDI/DKI
getminor	DDI/DKI
getrbuf	DDI/DKI
hat_getkpfnum	DKI only
inb	Solaris IA DDI
inl	Solaris IA DDI
inw	Solaris IA DDI
kmem_alloc	DDI/DKI
kmem_free	DDI/DKI
kmem_zalloc	DDI/DKI

Routine	Type
kstat_create	Solaris DDI
kstat_delete	Solaris DDI
kstat_install	Solaris DDI
kstat_named_init	Solaris DDI
kstat_queue	Solaris DDI
kstat_runq_back_to_waitq	Solaris DDI
kstat_runq_enter	Solaris DDI
kstat_runq_exit	Solaris DDI
kstat_waitq_enter	Solaris DDI
kstat_waitq_exit	Solaris DDI
kstat_waitq_to_runq	Solaris DDI
makecom_g0	Solaris DDI
makecom_g0_s	Solaris DDI
makecom_g1	Solaris DDI
makecom_g5	Solaris DDI
makedevice	DDI/DKI
max	DDI/DKI
min	DDI/DKI
minphys	Solaris DDI
mod_info	Solaris DDI
mod_install	Solaris DDI
mod_remove	Solaris DDI
mutex_destroy	Solaris DDI
mutex_enter	Solaris DDI
mutex_exit	Solaris DDI
mutex_init	Solaris DDI
mutex_owned	Solaris DDI
mutex_tryenter	Solaris DDI
nochpoll	Solaris DDI

Routine	Type
nodev	DDI/DKI
nulldev	DDI/DKI
numtos	Solaris DDI
outb	Solaris IA DDI
outl	Solaris IA DDI
outw	Solaris IA DDI
pci_config_get16	Solaris DDI
pci_config_get32	Solaris DDI
pci_config_get64	Solaris DDI
pci_config_get8	Solaris DDI
pci_config_getb	Solaris DDI
pci_config_getl	Solaris DDI
pci_config_getw	Solaris DDI
pci_config_put16	Solaris DDI
pci_config_put32	Solaris DDI
pci_config_put64	Solaris DDI
pci_config_put8	Solaris DDI
pci_config_putb	Solaris DDI
pci_config_putl	Solaris DDI
pci_config_putw	Solaris DDI
pci_config_setup	Solaris DDI
pci_config_teardown	Solaris DDI
physio	Solaris DDI
pollwakeup	DDI/DKI
proc_ref	Solaris DDI
proc_signal	Solaris DDI
proc_unref	Solaris DDI
ptob	DDI/DKI
repinsb	Solaris IA DDI

Routine	Type
repinsd	Solaris IA DDI
repinsw	Solaris IA DDI
repoutsb	Solaris IA DDI
repoutsd	Solaris IA DDI
repoutsw	Solaris IA DDI
rmalloc	DDI/DKI
rmalloc_wait	DDI/DKI
rmallocmap	DDI/DKI
rmallocmap_wait	DDI/DKI
rmfree	DDI/DKI
rmfreemap	DDI/DKI
rw_destroy	Solaris DDI
rw_downgrade	Solaris DDI
rw_enter	Solaris DDI
rw_exit	Solaris DDI
rw_init	Solaris DDI
rw_read_locked	Solaris DDI
rw_tryenter	Solaris DDI
rw_tryupgrade	Solaris DDI
scsi_abort	Solaris DDI
scsi_alloc_consistent_buf	Solaris DDI
scsi_cname	Solaris DDI
scsi_destroy_pkt	Solaris DDI
scsi_dmafree	Solaris DDI
scsi_dmaget	Solaris DDI
scsi_dname	Solaris DDI
scsi_errmsg	Solaris DDI
scsi_free_consistent_buf	Solaris DDI
scsi_hba_attach	Solaris DDI

Routine	Type
scsi_hba_attach_setup	Solaris DDI
scsi_hba_detach	Solaris DDI
scsi_hba_fini	Solaris DDI
scsi_hba_init	Solaris DDI
scsi_hba_lookup_capstr	Solaris DDI
scsi_hba_pkt_alloc	Solaris DDI
scsi_hba_pkt_free	Solaris DDI
scsi_hba_probe	Solaris DDI
scsi_hba_tran_alloc	Solaris DDI
scsi_hba_tran_free	Solaris DDI
scsi_ifgetcap	Solaris DDI
scsi_ifsetcap	Solaris DDI
scsi_init_pkt	Solaris DDI
scsi_log	Solaris DDI
scsi_mname	Solaris DDI
scsi_pktalloc	Solaris DDI
scsi_pktfree	Solaris DDI
scsi_poll	Solaris DDI
scsi_probe	Solaris DDI
scsi_resalloc	Solaris DDI
scsi_reset	Solaris DDI
scsi_reset_notify	Solaris DDI
scsi_resfree	Solaris DDI
scsi_rname	Solaris DDI
scsi_slave	Solaris DDI
scsi_sname	Solaris DDI
scsi_sync_pkt	Solaris DDI
scsi_transport	Solaris DDI
scsi_unprobe	Solaris DDI

Routine	Type
scsi_unslave	Solaris DDI
sema_destroy	Solaris DDI
sema_init	Solaris DDI
sema_p	Solaris DDI
sema_p_sig	Solaris DDI
sema_tryp	Solaris DDI
sema_v	Solaris DDI
sprintf	Solaris DDI
stoi	Solaris DDI
strchr	Solaris DDI
strcmp	Solaris DDI
strcpy	Solaris DDI
strlen	Solaris DDI
strncmp	Solaris DDI
strncpy	Solaris DDI
swab	DDI/DKI
timeout	DDI/DKI
uiomove	DDI/DKI
untimeout	DDI/DKI
ureadc	DDI/DKI
uwritec	DDI/DKI
va_arg	Solaris DDI
va_end	Solaris DDI
va_start	Solaris DDI
vcmn_err	DDI/DKI
vsprintf	Solaris DDI

Kernel Functions for Drivers

NAME

adjmsg – trim bytes from a message

SYNOPSIS

```
#include <sys/stream.h>

int adjmsg(mblk_t *mp, ssize_t len);
```

INTERFACE LEVEL

Architecture independent level 1 (DDI/DKI).

PARAMETERS

mp Pointer to the message to be trimmed.

len The number of bytes to be removed.

DESCRIPTION

The `adjmsg()` function removes bytes from a message. |*len*| (the absolute value of *len*) specifies the number of bytes to be removed. The `adjmsg()` function only trims bytes across message blocks of the same type.

The `adjmsg()` function finds the maximal leading sequence of message blocks of the same type as that of *mp* and starts removing bytes either from the head of that sequence or from the tail of that sequence. If *len* is greater than `0`, `adjmsg()` removes bytes from the start of the first message block in that sequence. If *len* is less than `0`, it removes bytes from the end of the last message block in that sequence.

The `adjmsg()` function fails if |*len*| is greater than the number of bytes in the maximal leading sequence it finds.

The `adjmsg()` function may remove any except the first zero-length message block created during adjusting. It may also remove any zero-length message blocks that occur within the scope of |*len*|.

RETURN VALUES

The `adjmsg()` function returns:

`1` Successful completion.

`0` An error occurred.

CONTEXT

The `adjmsg()` function can be called from user or interrupt context.

SEE ALSO

STREAMS Programming Guide

NAME

allocb – allocate a message block

SYNOPSIS

```
#include <sys/stream.h>

mblk_t *allocb(size_t size, uint_t pri);
```

PARAMETERS

Architecture independent level 1 (DDI/DKI).

size The number of bytes in the message block.

pri Priority of the request (no longer used).

DESCRIPTION

`allocb()` tries to allocate a STREAMSmessage block. Buffer allocation fails only when the system is out of memory. If no buffer is available, the `bufcall`(9F) function can help a module recover from an allocation failure.

A STREAMSmessage block is composed of three structures. The first structure is a message block (`mblk_t`). See `msgb`(9S). The `mblk_t` structure points to a data block structure (`dblk_t`). See `datab`(9S). Together these two structures describe the message type (if applicable) and the size and location of the third structure, the data buffer. The data buffer contains the data for this message block. The allocated data buffer is at least double-word aligned, so it can hold any C data structure.

The fields in the `mblk_t` structure are initialized as follows:

`b_cont` set to `NULL`

`b_rptr` points to the beginning of the data buffer

`b_wptr` points to the beginning of the data buffer

`b_datap` points to the `dblk_t` structure

The fields in the `dblk_t` structure are initialized as follows:

`db_base` points to the first byte of the data buffer

`db_lim` points to the last byte + 1 of the buffer

`db_type` set to `M_DATA`

The following figure identifies the data structure members that are affected when a message block is allocated.

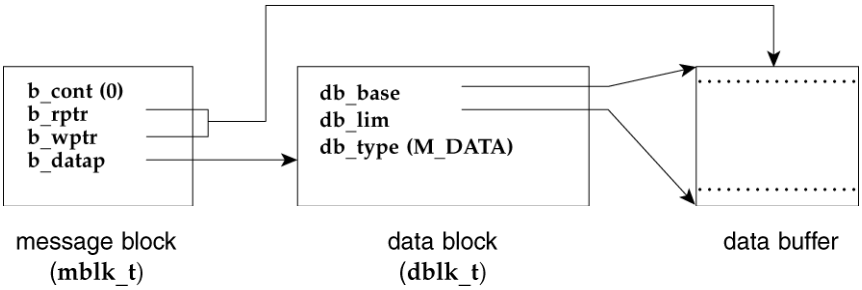

RETURN VALUES

A pointer to the allocated message block of type `M_DATA` on success.

A `NULL` pointer on failure.

CONTEXT

`allocb()` can be called from user or interrupt context.

EXAMPLES

EXAMPLE 1 `allocb()` Code Sample

Given a pointer to a queue (*q*) and an error number (*err*), the `send_error()` routine sends an `M_ERROR` type message to the stream head.

If a message cannot be allocated, `NULL` is returned, indicating an allocation failure (line 8). Otherwise, the message type is set to `M_ERROR` (line 10). Line 11 increments the write pointer (`bp->b_wptr`) by the size (one byte) of the data in the message.

A message must be sent up the read side of the stream to arrive at the stream head. To determine whether *q* points to a read queue or to a write queue, the `q->q_flag` member is tested to see if `QREADR` is set (line 13). If it is not set, *q* points to a write queue, and in line 14 the `RD`(9F) function is used to find the corresponding read queue. In line 15, the `putnext`(9F) function is used to send the message upstream, returning `1` if successful.

```
1  send_error(q,err)
2    queue_t *q;
3    unsigned char err;
4  {
5    mblk_t *bp;
6
7    if ((bp = allocb(1, BPRI_HI)) == NULL) /* allocate msg. block */
8         return(0);
9
10    bp->b_datap->db_type = M_ERROR;    /* set msg type to M_ERROR */
11    *bp->b_wptr++ = err;               /* increment write pointer */
12
13    if (!(q->q_flag & QREADR))     /* if not read queue     */
14         q = RD(q);                    /*    get read queue     */
15    putnext(q,bp);                     /* send message upstream */
```

EXAMPLE 1 `allocb()` Code Sample *(Continued)*

```
16    return(1);
17  }
```

SEE ALSO

`RD`(9F), `bufcall`(9F), `esballoc`(9F), `esbbcall`(9F), `putnext`(9F), `testb`(9F), `datab`(9S), `msgb`(9S)

Writing Device Drivers

STREAMS Programming Guide

NOTES

The *pri* argument is no longer used, but is retained for compatibility with existing drivers.

NAME

anocancel – prevent cancellation of asynchronous I/O request

SYNOPSIS

```
#include <sys/ddi.h>
#include <sys/sunddi.h>

int anocancel( );
```

INTERFACE LEVEL

Solaris DDI specific (Solaris DDI).

DESCRIPTION

`anocancel()` should be used by drivers that do not support canceling asynchronous I/O requests. `anocancel()` is passed as the driver cancel routine parameter to `aphysio`(9F).

RETURN VALUES

`anocancel()` returns `ENXIO`.

SEE ALSO

`aread`(9E), `awrite`(9E), `aphysio`(9F)

Writing Device Drivers

NAME

aphysio – perform asynchronous physical I/O

SYNOPSIS

```
#include <sys/types.h>
#include <sys/buf.h>
#include <sys/uio.h>
#include <sys/aio_req.h>
#include <sys/ddi.h>
#include <sys/sunddi.h>
```

```
int aphysio(int (*strat)(struct buf *), int (*cancel)(struct buf *),
     dev_t dev, int rw, void (*mincnt )(struct buf *), struct aio_req
     *aio_reqp);
```

PARAMETERS

strat	Pointer to device strategy routine.
cancel	Pointer to driver cancel routine. Used to cancel a submitted request. The driver must pass the address of the function `anocancel`(9F) because cancellation is not supported.
dev	The device number.
rw	Read/write flag. This is either `B_READ` when reading from the device or `B_WRITE` when writing to the device.
mincnt	Routine which bounds the maximum transfer unit size.
aio_reqp	Pointer to the `aio_req`(9S) structure which describes the user I/O request.

INTERFACE LEVEL

Solaris DDI specific (Solaris DDI).

DESCRIPTION

`aphysio()` performs asynchronous I/O operations between the device and the address space described by *aio_reqp→aio_uio*.

Prior to the start of the transfer, `aphysio()` verifies the requested operation is valid. It then locks the pages involved in the I/O transfer so they can not be paged out. The device strategy routine, *strat*, is then called one or more times to perform the physical I/O operations. `aphysio()` does not wait for each transfer to complete, but returns as soon as the necessary requests have been made.

`aphysio()` calls *mincnt* to bound the maximum transfer unit size to a sensible default for the device and the system. Drivers which do not provide their own local *mincnt* routine should call `aphysio()` with `minphys`(9F). `minphys`(9F) is the system *mincnt* routine. `minphys`(9F) ensures the transfer size does not exceed any system limits.

If a driver supplies a local *mincnt* routine, this routine should perform the following actions:

- If *bp→b_bcount* exceeds a device limit, set *bp→b_bcount* to a value supported by the device.
- Call `minphys`(9F) to ensure that the driver does not circumvent additional system limits.

RETURN VALUES

`aphysio()` returns:

`0`	Upon success.
`non-zero`	Upon failure.

CONTEXT

`aphysio()` can be called from user context only.

SEE ALSO

`aread`(9E), `awrite`(9E), `strategy`(9E), `anocancel`(9F), `biodone`(9F), `biowait`(9F), `minphys`(9F), `physio`(9F), `aio_req`(9S), `buf`(9S), `uio`(9S)

Writing Device Drivers

WARNINGS

It is the driver's responsibility to call `biodone`(9F) when the transfer is complete.

BUGS

Cancellation is not supported in this release. The address of the function `anocancel`(9F) must be used as the *cancel* argument.

NAME

ASSERT, assert – expression verification

SYNOPSIS

```
#include <sys/debug.h>

void ASSERT(EX);
```

INTERFACE LEVEL

Architecture independent level 1 (DDI/DKI).

PARAMETERS

EX boolean expression.

DESCRIPTION

`ASSERT()` is a macro which checks to see if the expression *EX* is true. If it is not, then `ASSERT()` causes an error message to be logged to the console and the system to panic. `ASSERT()` works only if the preprocessor symbol `DEBUG` is defined.

CONTEXT

`ASSERT()` can be used from user or interrupt context.

SEE ALSO

Writing Device Drivers

NAME

backq – get pointer to the queue behind the current queue

SYNOPSIS

```
#include <sys/stream.h>

queue_t *backq(queue_t *cq);
```

INTERFACE LEVEL

Architecture independent level 1 (DDI/DKI).

PARAMETERS

cq The pointer to the current queue. `queue_t` is an alias for the `queue`(9S) structure.

DESCRIPTION

`backq()` returns a pointer to the queue preceding *cq* (the current queue). If *cq* is a read queue, `backq()` returns a pointer to the queue downstream from *cq*, unless it is the stream end. If *cq* is a write queue, `backq()` returns a pointer to the next queue upstream from *cq*, unless it is the stream head.

RETURN VALUES

If successful, `backq()` returns a pointer to the queue preceding the current queue. Otherwise, it returns `NULL`.

CONTEXT

`backq()` can be called from user or interrupt context.

SEE ALSO

`queue`(9S)

Writing Device Drivers

STREAMS Programming Guide

NAME

bcanput – test for flow control in specified priority band

SYNOPSIS

```
#include <sys/stream.h>

int bcanput(queue_t *q, unsigned char pri);
```

INTERFACE LEVEL

Architecture independent level 1 (DDI/DKI).

PARAMETERS

q Pointer to the message queue.

pri Message priority.

DESCRIPTION

`bcanput()` searches through the stream (starting at *q*) until it finds a queue containing a service routine where the message can be enqueued, or until it reaches the end of the stream. If found, the queue containing the service routine is tested to see if there is room for a message of priority *pri* in the queue.

If *pri* is `0`, `bcanput()` is equivalent to a call with `canput`(9F).

`canputnext(q)` and `bcanputnext(q, pri)` should always be used in preference to `canput(q→q_next)` and `bcanput(q→q_next, pri)` respectively.

RETURN VALUES

`1` If a message of priority *pri* can be placed on the queue.

`0` If the priority band is full.

CONTEXT

`bcanput()` can be called from user or interrupt context.

SEE ALSO

`bcanputnext`(9F), `canput`(9F), `canputnext`(9F), `putbq`(9F), `putnext`(9F)

Writing Device Drivers

STREAMS Programming Guide

WARNINGS

Drivers are responsible for both testing a queue with `bcanput()` and refraining from placing a message on the queue if `bcanput()` fails.

NAME

bcmp – compare two byte arrays

SYNOPSIS

```
#include <sys/types.h>
#include <sys/ddi.h>

int bcmp(const void *s1, const void *s2, size_t len);
```

INTERFACE LEVEL

Architecture independent level 1 (DDI/DKI).

PARAMETERS

s1 Pointer to the first character string.

s2 Pointer to the second character string.

len Number of bytes to be compared.

DESCRIPTION

`bcmp()` compares two byte arrays of length *len*.

RETURN VALUES

`bcmp()` returns `0` if the arrays are identical, or `1` if they are not.

CONTEXT

`bcmp()` can be called from user or interrupt context.

SEE ALSO

`strcmp`(9F)

Writing Device Drivers

NOTES

Unlike `strcmp`(9F), `bcmp()` does not terminate when it encounters a null byte.

NAME

bcopy – copy data between address locations in the kernel

SYNOPSIS

```
#include <sys/types.h>

void bcopy(const void *from, void *to, size_t bcount);
```

INTERFACE LEVEL

Architecture independent level 1 (DDI/DKI).

PARAMETERS

from Source address from which the copy is made.

to Destination address to which copy is made.

bcount The number of bytes moved.

DESCRIPTION

`bcopy()` copies *bcount* bytes from one kernel address to another. If the input and output addresses overlap, the command executes, but the results may not be as expected.

Note that `bcopy()` should never be used to move data in or out of a user buffer, because it has no provision for handling page faults. The user address space can be swapped out at any time, and `bcopy()` always assumes that there will be no paging faults. If `bcopy()` attempts to access the user buffer when it is swapped out, the system will panic. It is safe to use `bcopy()` to move data within kernel space, since kernel space is never swapped out.

CONTEXT

`bcopy()` can be called from user or interrupt context.

EXAMPLES

EXAMPLE 1 Copying data between address locations in the kernel:

An I/O request is made for data stored in a RAM disk. If the I/O operation is a read request, the data is copied from the RAM disk to a buffer (line 8). If it is a write request, the data is copied from a buffer to the RAM disk (line 15). `bcopy()` is used since both the RAM disk and the buffer are part of the kernel address space.

```
 1 #define RAMDNBLK 1000                /* blocks in the RAM disk */
 2 #define RAMDBSIZ 512                 /* bytes per block */
 3 char ramdblks[RAMDNBLK][RAMDBSIZ];   /* blocks forming RAM
                                        /* disk
       ...
 4
 5 if   (bp->b_flags & B_READ)      /* if read request, copy data */
 6                                  /* from RAM disk data block */
 7                                  /* to system buffer */
 8          bcopy(&ramdblks[bp->b_blkno][0], bp->b_un.b_addr,
 9              bp->b_bcount);
10
11 else                             /* else write request, */
12                                  /* copy data from a */
13                                  /* system buffer to RAM disk */
14                                  /* data block */
15          bcopy(bp->b_un.b_addr, &ramdblks[bp->b_blkno][0],
16              bp->b_bcount);
```

SEE ALSO

`copyin`(9F), `copyout`(9F)

WARNINGS

The *from* and *to* addresses must be within the kernel space. No range checking is done. If an address outside of the kernel space is selected, the driver may corrupt the system in an unpredictable way.

NAME

bioclone – clone another buffer

SYNOPSIS

```
#include <sys/ddi.h> #include <sys/sunddi.h>

struct buf *bioclone(struct buf *bp, off_t off, size_t len, dev_t dev,
     daddr_t blkno, int (*iodone) (struct buf *), struct buf *bp_mem,
     int sleepflag);
```

INTERFACE LEVEL

Solaris DDI specific (Solaris DDI).

PARAMETERS

bp	Pointer to the `buf`(9S) structure describing the original I/O request.
off	Offset within original I/O request where new I/O request should start.
len	Length of the I/O request.
dev	Device number.
blkno	Block number on device.
iodone	Specific `biodone`(9F) routine.
bp_mem	Pointer to a buffer structure to be filled in or NULL.
sleepflag	Determines whether caller can sleep for memory. Possible flags are `KM_SLEEP` to allow sleeping until memory is available, or `KM_NOSLEEP` to return NULL immediately if memory is not available.

DESCRIPTION

`bioclone()` returns an initialized buffer to perform I/O to a portion of another buffer. The new buffer will be set up to perform I/O to the range within the original I/O request specified by the parameters *off* and *len.* An offset 0 starts the new I/O request at the same address as the original request. *off* + *len* must not exceed *b_bcount,* the length of the original request. The device number *dev* specifies the device to which the buffer is to perform I/O. *blkno* is the block number on device. It will be assigned to the *b_blkno* field of the cloned buffer structure. *iodone* lets the driver identify a specific `biodone`(9F) routine to be called by the driver when the I/O is complete. *bp_mem* determines from where the space for the buffer should be allocated. If *bp_mem* is NULL, `bioclone()` will allocate a new buffer using `getrbuf`(9F). If *sleepflag* is set to `KM_SLEEP`, the driver may sleep until space is freed up. If *sleepflag* is set to `KM_NOSLEEP`, the driver will not sleep. In either case, a pointer to the allocated space is returned or `NULL` to indicate that no space was available. After the transfer is completed, the buffer has to be freed using `freerbuf`(9F). If *bp_mem* is not `NULL`, it will be used as the space for the buffer structure. The driver has to ensure that *bp_mem* is initialized properly either using `getrbuf`(9F) or `bioinit`(9F).

If the original buffer is mapped into the kernel virtual address space using `bp_mapin`(9F) before calling `bp_clone()`, a clone buffer will share the kernel mapping of the original buffer. An additional `bp_mapin()` to get a kernel mapping for the clone buffer is not necessary.

The driver has to ensure that the original buffer is not freed while any of the clone buffers is still performing I/O. The `biodone()` function has to be called on all clone buffers `before` it is called on the original buffer.

RETURN VALUES

The `bioclone()` function returns a pointer to the initialized buffer header, or `NULL` if no space is available.

CONTEXT

`bioclone()` can be called from user or interrupt context. Drivers must not allow `bioclone()` to sleep if called from an interrupt routine.

EXAMPLES

EXAMPLE 1 : Using `bioclone()`

A device driver can use `bioclone()` for disk striping. For each disk in the stripe, a clone buffer is created which performs I/O to a portion of the original buffer.

```
static int
stripe_strategy(struct buf *bp)
{
        ...
        bp_orig = bp;
        bp_1 = bioclone(bp_orig, 0, size_1, dev_1, blkno_1,
                        stripe_done, NULL, KM_SLEEP);
        fragment++;
        ...
        bp_n = bioclone(bp_orig, offset_n, size_n, dev_n,
                      blkno_n, stripe_done, NULL, KM_SLEEP);
        fragment++;
        /* submit bp_1 ... bp_n to device */
        xxstrategy(bp_x);
        return (0);
}

static uint_t
xxintr(caddr_t arg)
{
        ...
        /*
        * get bp of completed subrequest. biodone(9F) will
        * call stripe_done()
        */
        biodone(bp);
        return (0);
}

static int
stripe_done(struct buf *bp)
{
        ...
        freerbuf(bp);
        fragment--;
        if (fragment == 0) {
                /* get bp_orig */
                biodone(bp_orig);
        }
```

EXAMPLE 1 : Using `bioclone()` *(Continued)*

```
        return (0);
}
```

SEE ALSO

`biodone`(9F), `bp_mapin`(9F), `freerbuf`(9F), `getrbuf`(9F), `buf`(9S)

Writing Device Drivers

NAME

biodone – release buffer after buffer I/O transfer and notify blocked threads

SYNOPSIS

```
#include <sys/types.h>
#include <sys/buf.h>

void biodone(struct buf *bp);
```

INTERFACE LEVEL

Architecture independent level 1 (DDI/DKI).

PARAMETERS

bp Pointer to a `buf`(9S) structure.

DESCRIPTION

`biodone()` notifies blocked processes waiting for the I/O to complete, sets the `B_DONE` flag in the `b_flags` field of the `buf`(9S) structure, and releases the buffer if the I/O is asynchronous. `biodone()` is called by either the driver interrupt or `strategy`(9E) routines when a buffer I/O request is complete.

`biodone()` provides the capability to call a completion routine if *bp* describes a kernel buffer. The address of the routine is specified in the `b_iodone` field of the `buf`(9S) structure. If such a routine is specified, `biodone()` calls it and returns without performing any other actions. Otherwise, it performs the steps above.

CONTEXT

`biodone()` can be called from user or interrupt context.

EXAMPLES

EXAMPLE 1 Using the `biodone()` Function

Generally, the first validation test performed by any block device `strategy`(9E) routine is a check for an end-of-file (EOF) condition. The `strategy`(9E) routine is responsible for determining an EOF condition when the device is accessed directly. If a `read`(2) request is made for one block beyond the limits of the device (line 10), it will report an EOF condition. Otherwise, if the request is outside the limits of the device, the routine will report an error condition. In either case, report the I/O operation as complete (line 27).

```
 1   #define RAMDNBLK    1000    /* Number of blocks in RAM disk */
 2   #define RAMDBSIZ    512    /* Number of bytes per block */
 3   char ramdblks[RAMDNBLK][RAMDBSIZ];    /* Array containing RAM disk */
 4
 5   static int
 6   ramdstrategy(struct buf *bp)
 7   {
 8      daddr_t blkno = bp->b_blkno;    /* get block number */
 9
10      if ((blkno < 0) || (blkno >= RAMDNBLK)) {
11            /*
12             * If requested block is outside RAM disk
13             * limits, test for EOF which could result
14             * from a direct (physio) request.
15             */
16            if ((blkno == RAMDNBLK) && (bp->b_flags & B_READ)) {
17             /*
18              * If read is for block beyond RAM disk
19              * limits, mark EOF condition.
20              */
21              bp->b_resid = bp->b_bcount;    /* compute return value */
```

EXAMPLE 1 Using the `biodone()` Function *(Continued)*

```

        } else {    /* I/O attempt is beyond */
           bp->b_error = ENXIO;    /*    limits of RAM disk */
           bp->b_flags |= B_ERROR;    /* return error */
        }
        biodone(bp);    /* mark I/O complete (B_DONE) */
          /*
           * Wake any processes awaiting this I/O
           * or release buffer for asynchronous
           * (B_ASYNC) request.
           */
        return (0);
    }
        . . .
```

SEE ALSO

`read`(2), `strategy`(9E), `biowait`(9F), `ddi_add_intr`(9F), `delay`(9F), `timeout`(9F), `untimeout`(9F), `buf`(9S)

Writing Device Drivers

WARNINGS

After calling `biodone()`, *bp* is no longer available to be referred to by the driver. If the driver makes any reference to *bp* after calling `biodone()`, a panic may result.

NOTES

Drivers that use the `b_iodone` field of the `buf`(9S) structure to specify a substitute completion routine should save the value of `b_iodone` before changing it, and then restore the old value before calling `biodone()` to release the buffer.

NAME

bioerror – indicate error in buffer header

SYNOPSIS

```
#include <sys/types.h>
#include <sys/buf.h>
#include <sys/ddi.h>

void bioerror(struct buf *bp, int error);
```

INTERFACE LEVEL

Solaris DDI specific (Solaris DDI)

PARAMETERS

bp Pointer to the `buf`(9S) structure describing the transfer.

error Error number to be set, or zero to clear an error indication.

DESCRIPTION

If *error* is non-zero, `bioerror()` indicates an error has occured in the `buf`(9S) structure. A subsequent call to `geterror`(9F) will return *error*.

If *error* is `0`, the error indication is cleared and a subsequent call to `geterror`(9F) will return `0`.

CONTEXT

`bioerror()` can be called from any context.

SEE ALSO

`strategy`(9E), `geterror`(9F), `getrbuf`(9F), `buf`(9S)

NAME

biofini – uninitialize a buffer structure

SYNOPSIS

```
#include <sys/ddi.h>
#include <sys/sunddi.h>

void biofini(struct buf *bp);
```

INTERFACE LEVEL

Solaris DDI specific (Solaris DDI).

PARAMETERS

bp Pointer to the buffer header structure.

DESCRIPTION

The `biofini()` function uninitializes a `buf`(9S) structure. If a buffer structure has been allocated and initialized using `kmem_alloc`(9F) and `bioinit`(9F) it needs to be uninitialized using `biofini()` before calling `kmem_free`(9F). It is not necessary to call `biofini()` before freeing a buffer structure using `freerbuf`(9F) because `freerbuf()` will call `biofini()` directly.

CONTEXT

The `biofini()` function can be called from any context.

EXAMPLES

EXAMPLE 1 Using `biofini()`

```
struct buf *bp = kmem_alloc(biosize(), KM_SLEEP);
bioinit(bp);
/* use buffer */
biofini(bp);
kmem_free(bp, biosize());
```

SEE ALSO

`bioinit`(9F), `bioreset`(9F), `biosize`(9F), `freerbuf`(9F), `kmem_alloc`(9F), `kmem_free`(9F), `buf`(9S)

Writing Device Drivers

NAME

bioinit – initialize a buffer structure

SYNOPSIS

```
#include <sys/ddi.h>
#include <sys/sunddi.h>

void bioinit(struct buf *bp);
```

INTERFACE LEVEL

Solaris DDI specific (Solaris DDI).

PARAMETERS

bp Pointer to the buffer header structure.

DESCRIPTION

The `bioinit()` function initializes a `buf`(9S) structure. A buffer structure contains state information which has to be initialized if the memory for the buffer was allocated using `kmem_alloc`(9F). This is not necessary for a buffer allocated using `getrbuf`(9F) because `getrbuf()` will call `bioinit()` directly.

CONTEXT

The `bioinit()` function can be called from any context.

EXAMPLES

EXAMPLE 1 Using `bioinit()`

```
struct buf *bp = kmem_alloc(biosize(), KM_SLEEP);
bioinit(bp);
/* use buffer */
```

SEE ALSO

`biofini`(9F), `bioreset`(9F), `biosize`(9F), `getrbuf`(9F), `kmem_alloc`(9F), `buf`(9S)

Writing Device Drivers

NAME

biomodified – check if a buffer is modified

SYNOPSIS

```
#include <sys/ddi.h>
#include <sys/sunddi.h>

int biomodified(struct buf *bp);
```

INTERFACE LEVEL

Solaris DDI specific (Solaris DDI).

PARAMETERS

bp Pointer to the buffer header structure.

DESCRIPTION

The `biomodified()` function returns status to indicate if the buffer is modified. The `biomodified()` function is only supported for paged- I/O request, that is the `B_PAGEIO` flag must be set in the *b_flags* field of the `buf`(9S) structure. The `biomodified()` function will check the memory pages associated with this buffer whether the Virtual Memory system's modification bit is set. If at least one of these pages is modified, the buffer is indicated as modified. A filesystem will mark the pages `unmodified` when it writes the pages to the backing store. The `biomodified()` function can be used to detect any modifications to the memory pages while I/O is in progress.

A device driver can use `biomodified()` for disk mirroring. An application is allowed to mmap a file which can reside on a disk which is mirrored by multiple submirrors. If the file system writes the file to the backing store, it is written to all submirrors in parallel. It must be ensured that the copies on all submirrors are identical. The `biomodified()` function can be used in the device driver to detect any modifications to the buffer by the user program during the time the buffer is written to multiple submirrors.

RETURN VALUES

The `biomodified()` function returns the following values:

`1` Buffer is modified.

`0` Buffer is not modified.

`-1` Buffer is not used for paged I/O request.

CONTEXT

`biomodified()` can be called from any context.

SEE ALSO

`bp_mapin`(9F), `buf`(9S)

Writing Device Drivers

NAME

bioreset – reuse a private buffer header after I/O is complete

SYNOPSIS

```
#include <sys/buf.h>
#include <sys/ddi.h>

void bioreset(struct buf *bp);
```

INTERFACE LEVEL

Solaris DDI specific (Solaris DDI)

PARAMETERS

bp Pointer to the `buf`(9S) structure.

DESCRIPTION

`bioreset()` is used by drivers that allocate private buffers with `getrbuf`(9F) or `kmem_alloc`(9F) and want to reuse them in multiple transfers before freeing them with `freerbuf`(9F) or `kmem_free`(9F). `bioreset()` resets the buffer header to the state it had when initially allocated by `getrbuf()` or initialized by `bioinit`(9F).

CONTEXT

`bioreset()` can be called from any context.

SEE ALSO

`strategy`(9E), `bioinit`(9F), `biofini`(9F), `freerbuf`(9F), `getrbuf`(9F), `kmem_alloc`(9F), `kmem_free`(9F), `buf`(9S)

NOTES

bp must not describe a transfer in progress.

NAME

biosize – returns size of a buffer structure

SYNOPSIS

```
#include <sys/ddi.h>
#include <sys/sunddi.h>

size_t biosize(void);
```

INTERFACE LEVEL

Solaris DDI specific (Solaris DDI).

DESCRIPTION

The `biosize()` function returns the size in bytes of the `buf`(9S) structure. The `biosize()` function is used by drivers in combination with `kmem_alloc`(9F) and `bioinit`(9F) to allocate buffer structures embedded in other data structures.

CONTEXT

The `biosize()` function can be called from any context.

SEE ALSO

`biofini`(9F), `bioinit`(9F), `getrbuf`(9F), `kmem_alloc`(9F), `buf`(9S)

Writing Device Drivers

NAME

biowait – suspend processes pending completion of block I/O

SYNOPSIS

```
#include <sys/types.h>
#include <sys/buf.h>

int biowait(struct buf *bp);
```

INTERFACE LEVEL

Architecture independent level 1 (DDI/DKI).

PARAMETERS

bp Pointer to the `buf` structure describing the transfer.

DESCRIPTION

Drivers allocating their own `buf` structures with `getrbuf`(9F) can use the `biowait()` function to suspend the current thread and wait for completion of the transfer.

Drivers must call `biodone`(9F) when the transfer is complete to notify the thread blocked by `biowait()`. `biodone()` is usually called in the interrupt routine.

RETURN VALUES

`0`	Upon success
`non-zero`	Upon I/O failure. `biowait()` calls `geterror`(9F) to retrieve the error number which it returns.

CONTEXT

`biowait()` can be called from user context only.

SEE ALSO

`biodone`(9F), `geterror`(9F), `getrbuf`(9F), `buf`(9S)

Writing Device Drivers

NAME

bp_mapin – allocate virtual address space

SYNOPSIS

```
#include <sys/types.h>
#include <sys/buf.h>

void bp_mapin(struct buf *bp);
```

INTERFACE LEVEL

Architecture independent level 1 (DDI/DKI).

PARAMETERS

bp Pointer to the buffer header structure.

DESCRIPTION

`bp_mapin()` is used to map virtual address space to a page list maintained by the buffer header during a paged- I/O request. `bp_mapin()` allocates system virtual address space, maps that space to the page list, and returns the starting address of the space in the `bp->b_un.b_addr` field of the `buf`(9S) structure. Virtual address space is then deallocated using the `bp_mapout`(9F) function.

If a null page list is encountered, `bp_mapin()` returns without allocating space and no mapping is performed.

CONTEXT

`bp_mapin()` can be called from user and kernel contexts.

SEE ALSO

`bp_mapout`(9F), `buf`(9S)

Writing Device Drivers

NAME

bp_mapout – deallocate virtual address space

SYNOPSIS

```
#include <sys/types.h>
#include <sys/buf.h>

void bp_mapout(struct buf *bp);
```

INTERFACE LEVEL

Architecture independent level 1 (DDI/DKI).

PARAMETERS

bp Pointer to the buffer header structure.

DESCRIPTION

`bp_mapout()` deallocates system virtual address space allocated by a previous call to `bp_mapin`(9F). `bp_mapout()` should only be called on buffers which have been allocated and are owned by the device driver. It must not be called on buffers passed to the driver through the `strategy`(9E) entry point (for example a filesystem). Because `bp_mapin`(9F) does not keep a reference count, `bp_mapout()` will wipe out any kernel mapping that a layer above the device driver might rely on.

CONTEXT

`bp_mapout()` can be called from user context only.

SEE ALSO

`strategy`(9E), `bp_mapin`(9F), `buf`(9S)

Writing Device Drivers

NAME

btop – convert size in bytes to size in pages (round down)

SYNOPSIS

```
#include <sys/ddi.h>

unsigned long btop(unsigned long numbytes);
```

INTERFACE LEVEL

Architecture independent level 1 (DDI/DKI).

PARAMETERS

numbytes Number of bytes.

DESCRIPTION

`btop()` returns the number of memory pages that are contained in the specified number of bytes, with downward rounding in the case that the byte count is not a page multiple. For example, if the page size is `2048`, then `btop(4096)` returns `2`, and `btop(4097)` returns `2` as well. `btop(0)` returns `0`.

RETURN VALUES

The return value is always the number of pages. There are no invalid input values, and therefore no error return values.

CONTEXT

`btop()` can be called from user or interrupt context.

SEE ALSO

`btopr`(9F), `ddi_btop`(9F), `ptob`(9F)

Writing Device Drivers

NAME

btopr – convert size in bytes to size in pages (round up)

SYNOPSIS

```
#include <sys/ddi.h>

unsigned long btopr(unsigned long numbytes);
```

INTERFACE LEVEL

Architecture independent level 1 (DDI/DKI).

PARAMETERS

numbytes Number of bytes.

DESCRIPTION

`btopr()` returns the number of memory pages contained in the specified number of bytes memory, rounded up to the next whole page. For example, if the page size is 2048, then `btopr(4096)` returns `2`, and `btopr(4097)` returns `3`.

RETURN VALUES

The return value is always the number of pages. There are no invalid input values, and therefore no error return values.

CONTEXT

`btopr()` can be called from user or interrupt context.

SEE ALSO

`btop`(9F), `ddi_btopr`(9F), `ptob`(9F)

Writing Device Drivers

NAME

bufcall – call a function when a buffer becomes available

SYNOPSIS

```
#include <sys/types.h>
#include <sys/stream.h>

bufcall_id_t bufcall(size_t size, uint_t pri, void *funcvoid *arg,
     void *arg);
```

INTERFACE LEVEL

Architecture independent level 1 (DDI/DKI).

PARAMETERS

size Number of bytes required for the buffer.

pri Priority of the `allocb`(9F) allocation request (not used).

func Function or driver routine to be called when a buffer becomes available.

arg Argument to the function to be called when a buffer becomes available.

DESCRIPTION

`bufcall()` serves as a `timeout`(9F) call of indeterminate length. When a buffer allocation request fails, `bufcall()` can be used to schedule the routine *func*, to be called with the argument *arg* when a buffer becomes available. *func* may call `allocb()` or it may do something else.

RETURN VALUES

If successful, `bufcall()` returns a `bufcall` ID that can be used in a call to `unbufcall()` to cancel the request. If the `bufcall()` scheduling fails, *func* is never called and `0` is returned.

CONTEXT

`bufcall()` can be called from user or interrupt context.

EXAMPLES

EXAMPLE 1 Calling a function when a buffer becomes available:

The purpose of this `srv`(9E) service routine is to add a header to all `M_DATA` messages. Service routines must process all messages on their queues before returning, or arrange to be rescheduled

While there are messages to be processed (line 13), check to see if it is a high priority message or a normal priority message that can be sent on (line 14). Normal priority message that cannot be sent are put back on the message queue (lie 34). If the message was a high priority one, or if it was normal priority and `canputnext`(9F) succeeded, then send all but `M_DATA` messages to the next module with `putnext`(9F) (line 16).

For `M_DATA` messages, try to allocate a buffer large enough to hold the header (line 18). If no such buffer is available, the service routine must be rescheduled for a time when a buffer is available. The original message is put back on the queue (line 20) and `bufcall` (line 21) is used to attempt the rescheduling. It will succeed if the rescheduling succeeds, indicating that qenable will be called subsequently with the argument *q* once a buffer of the specified size (`sizeof (struct hdr)`) becomes available. If it does, `qenable`(9F) will put *q* on the list of queues to have their service routines called. If `bufcall()` fails, `timeout`(9F) (line 22) is used to try again in about a half second.

EXAMPLE 1 Calling a function when a buffer becomes available: *(Continued)*

If the buffer allocation was successful, initialize the header (lines 25–28), make the message type `M_PROTO` (line 29), link the `M_DATA` message to it (line 30), and pass it on (line 31).

Note that this example ignores the bookkeeping needed to handle `bufcall()` and `timeout`(9F) cancellation for ones that are still outstanding at close time.

```
 1  struct hdr {
 2     unsigned int h_size;
 3     int          h_version;
 4  };
 5
 6  void xxxsrv(q)
 7     queue_t *q;
 8  {
 9     mblk_t *bp;
10     mblk_t *mp;
11     struct hdr *hp;
12
13     while ((mp = getq(q)) != NULL) {    /* get next message */
14         if (mp->b_datap->db_type >= QPCTL ||    /* if high priority */
                canputnext(q)) {    /* normal & can be passed */
15            if (mp->b_datap->db_type != M_DATA)
16                 putnext(q, mp);    /* send all but M_DATA */
17            else {
18                bp = allocb(sizeof(struct hdr), BPRI_LO);
19                if (bp == NULL) {    /* if unsuccessful */
20                     putbq(q, mp);    /* put it back */
21                     if (!bufcall(sizeof(struct hdr), BPRI_LO,
                           qenable, q))    /* try to reschedule */
22                         timeout(qenable, q, drv_usectohz(500000));
23                        return (0);
24                 }
25                 hp = (struct hdr *)bp->b_wptr;
26                 hp->h_size = msgdsize(mp);    /* initialize header */
27                 hp->h_version = 1;
28                 bp->b_wptr += sizeof(struct hdr);
29                 bp->b_datap->db_type = M_PROTO;    /* make M_PROTO  */
30                 bp->b_cont = mp;    /* link it */
31                 putnext(q, bp);    /* pass it on */
32            }
33         } else {    /* normal priority, canputnext failed */
34           putbq(q, mp);    /* put back on the message queue */
35           return (0);
36         }
37        }
    return (0);
38  }
```

SEE ALSO

`srv`(9E), `allocb`(9F), `canputnext`(9F), `esballoc`(9F), `esbbcall`(9F), `putnext`(9F), `qenable`(9F), `testb`(9F), `timeout`(9F), `unbufcall`(9F)

Writing Device Drivers

STREAMS Programming Guide

WARNINGS

Even when *func* is called by `bufcall()`, `allocb`(9F) can fail if another module or driver had allocated the memory before *func* was able to call `allocb`(9F).

NAME

bzero – clear memory for a given number of bytes

SYNOPSIS

```
#include <sys/types.h>
#include <sys/ddi.h>

void bzero(void *addr, size_t bytes);
```

INTERFACE LEVEL

Architecture independent level 1 (DDI/DKI).

PARAMETERS

addr Starting virtual address of memory to be cleared.

bytes The number of bytes to clear starting at *addr*.

DESCRIPTION

`bzero()` clears a contiguous portion of memory by filling it with zeros.

CONTEXT

`bzero()` can be called from user or interrupt context.

SEE ALSO

`bcopy`(9F), `clrbuf`(9F), `kmem_zalloc`(9F)

Writing Device Drivers

WARNINGS

The address range specified must be within the kernel space. No range checking is done. If an address outside of the kernel space is selected, the driver may corrupt the system in an unpredictable way.

NAME

canput – test for room in a message queue

SYNOPSIS

```
#include <sys/stream.h>

int canput(queue_t *q);
```

INTERFACE LEVEL

Architecture independent level 1 (DDI/DKI).

PARAMETERS

q Pointer to the message queue.

DESCRIPTION

`canput()` searches through the stream (starting at *q*) until it finds a queue containing a service routine where the message can be enqueued, or until it reaches the end of the stream. If found, the queue containing the service routine is tested to see if there is room for a message in the queue.

`canputnext(q)` and `bcanputnext(q, pri)` should always be used in preference to `canput(q→q_next)` and `bcanput(q→q_next, pri)` respectively.

RETURN VALUES

`1` If the message queue is not full.

`0` If the queue is full.

CONTEXT

`canput()` can be called from user or interrupt context.

SEE ALSO

`bcanput`(9F), `bcanputnext`(9F), `canputnext`(9F), `putbq`(9F), `putnext`(9F)

Writing Device Drivers

STREAMS Programming Guide

WARNINGS

Drivers are responsible for both testing a queue with `canput()` and refraining from placing a message on the queue if `canput()` fails.

NAME

canputnext, bcanputnext – test for room in next module's message queue

SYNOPSIS

```
#include <sys/stream.h>

int canputnext(queue_t *q);

int bcanputnext(queue_t *q, unsigned char pri);
```

INTERFACE LEVEL

Architecture independent level 1 (DDI/DKI).

PARAMETERS

q Pointer to a message queue belonging to the invoking module.

pri Minimum priority level.

DESCRIPTION

The invocation `canputnext(q);` is an atomic equivalent of the `canput(q→q_next);` routine. That is, the STREAMS framework provides whatever mutual exclusion is necessary to insure that dereferencing *q* through its `q_next` field and then invoking `canput`(9F) proceeds without interference from other threads.

`bcanputnext(q, pri);` is the equivalent of the `bcanput(q→q_next, pri);` routine.

`canputnext(q);` and `bcanputnext(q, pri);` should always be used in preference to `canput(q→q_next);` and `bcanput(q→q_next, pri);` respectively.

See `canput`(9F) and `bcanput`(9F) for further details.

RETURN VALUES

`1` If the message queue is not full.

`0` If the queue is full.

CONTEXT

`canputnext()` and `bcanputnext()` can be called from user or interrupt context.

WARNINGS

Drivers are responsible for both testing a queue with `canputnext()` or `bcanputnext()` and refraining from placing a message on the queue if the queue is full.

SEE ALSO

`bcanput`(9F), `canput`(9F)

Writing Device Drivers

STREAMS Programming Guide

NAME

clrbuf – erase the contents of a buffer

SYNOPSIS

```
#include <sys/types.h>
#include <sys/buf.h>

void clrbuf(struct buf *bp);
```

INTERFACE LEVEL

Architecture independent level 1 (DDI/DKI).

PARAMETERS

bp Pointer to the `buf`(9S) structure.

DESCRIPTION

`clrbuf()` zeros a buffer and sets the `b_resid` member of the `buf`(9S) structure to `0`. Zeros are placed in the buffer starting at *bp*→`b_un.b_addr` for a length of *bp*→`b_bcount` bytes. `b_un.b_addr` and `b_bcount` are members of the `buf`(9S) data structure.

CONTEXT

`clrbuf()` can be called from user or interrupt context.

SEE ALSO

`getrbuf`(9F), `buf`(9S)

Writing Device Drivers

NAME

cmn_err, vcmn_err – display an error message or panic the system

SYNOPSIS

```
#include <sys/cmn_err.h>
#include <sys/ddi.h>
#include <sys/sunddi.h>

void cmn_err(int level, char *format...);

#include <sys/varargs.h>

void vcmn_err(int level, char *format, va_list ap);
```

INTERFACE LEVEL

Architecture independent level 1 (DDI/DKI).

PARAMETERS

cmn_err( )

level A constant indicating the severity of the error condition.

format The message to be displayed.

vcmn_err( )

`vcmn_err()` takes *level* and *format* as described for `cmn_err()`, but its third argument is different:

ap The variable argument list passed to the function.

DESCRIPTION

cmn_err( )

`cmn_err()` displays a specified message on the console. `cmn_err()` can also panic the system. When the system panics, it attempts to save recent changes to data, display a "panic message" on the console, attempt to write a core file, and halt system processing. See the `CE_PANIC` *level* below.

level is a constant indicating the severity of the error condition. The four severity levels are:

`CE_CONT` Used to continue another message or to display an informative message not associated with an error. Note that multiple `CE_CONT` messages without a newline may or may not appear on the system console or in the system buffer as a single line message. A single line message may be produced by constructing the message with `sprintf`(9F) or `vsprintf`(9F) before calling `cmn_err()`.

`CE_NOTE` Used to display a message preceded with `NOTICE`. This message is used to report system events that do not necessarily require user action, but may interest the system administrator. For example, a message saying that a sector on a disk needs to be accessed repeatedly before it can be accessed correctly might be noteworthy.

`CE_WARN` Used to display a message preceded with `WARNING`. This message is used to report system events that require immediate attention, such as those where if an action is not taken, the system may panic. For example, when a peripheral device does not initialize correctly, this level should be used.

`CE_PANIC` Used to display a message preceded with "`panic`", and to panic the system. Drivers should specify this level only under the most severe conditions or when debugging a driver. A valid use of this level is when the system cannot continue to function. If the error is recoverable, or not essential to continued system operation, do not panic the system.

format is the message to be displayed. It is a character string which may contain plain characters and conversion specifications. By default, the message is sent both to the system console and to the system buffer.

Each conversion specification in *format* is introduced by the `%` character, after which the following appear in sequence:

An optional decimal digit specifying a minimum field width for numeric conversion. The converted value will be right-justified and padded with leading zeroes if it has fewer characters than the minimum.

An optional `l` (`ll`) specifying that a following `d`, `D`, `o`, `O`, `x`, `X`, or `u` conversion character applies to a `long` (`long long`) integer argument. An `l` (`ll`) before any other conversion character is ignored.

A character indicating the type of conversion to be applied:

`d,D,o,O,x,X,u` The integer argument is converted to signed decimal (`d`, `D`), unsigned octal (`o`, `O`), unsigned hexadecimal (`x`, `X`), or unsigned decimal (`u`), respectively, and displayed. The letters `abcdef` are used for `x` and `X` conversion.

`c` The character value of the argument is displayed.

`b` The `%b` conversion specification allows bit values to be displayed meaningfully. Each `%b` takes an integer value and a format string from the argument list. The first character of the format string should be the output base encoded as a control character. This base is used to display the integer argument. The remaining groups of characters in the format string consist of a bit number (between 1 and 32, also encoded as a control character) and the next characters (up to the next control character or '\0') give the name of the bit field. The string corresponding to the bit fields set in the integer argument is displayed after the numerical value. See EXAMPLE section.

p The argument is taken to be a pointer; the value of the pointer is displayed in unsigned hexadecimal. The display format is equivalent to `%lx`. To avoid lint warnings, cast pointers to type `void *` when using the `%p` format specifier.

`s` The argument is taken to be a string (character pointer), and characters from the string are displayed until a null character is encountered. If the character pointer is `NULL`, the string `<null string>` is used in its place.

`%` Copy a `%`; no argument is converted.

The first character in *format* affects where the message will be written:

`!` the message goes only to the system buffer.

`^` the message goes only to the console.

`?` If *level* is also `CE_CONT`, the message is always sent to the system buffer, but is only written to the console when the system has been booted in verbose mode. See `kernel`(1M). If neither condition is met, the '? ' character has no effect and is simply ignored.

To display the contents of the system buffer, use the `dmesg`(1M) command.

`cmn_err()` appends a `\n` to each *format*, except when *level* is `CE_CONT`.

vcmn_err( )

`vcmn_err()` is identical to `cmn_err()` except that its last argument, *ap*, is a pointer to a variable list of arguments. *ap* contains the list of arguments used by the conversion specifications in *format*. *ap* must be initialized by calling `va_start`(9F). `va_end`(9F) is used to clean up and must be called after each traversal of the list. Multiple traversals of the argument list, each bracketed by `va_start`(9F) and `va_end`(9F), are possible.

RETURN VALUES

None. However, if an unknown *level* is passed to `cmn_err()`, the following panic error message is displayed:

`panic: unknown level in cmn_err (level=` *level* `, msg= format)`

CONTEXT

`cmn_err()` can be called from user or kernel context.

EXAMPLES

EXAMPLE 1 Using `cmn_err()`

This first example shows how `cmn_err()` can record tracing and debugging information only in the system buffer (lines 17); display problems with a device only on the system console (line 23); or display problems with the device on both the system console and in the system buffer (line 28).

```
 1  struct  reg {
2          uchar_t data;
3          uchar_t csr;
4  };
5
6  struct  xxstate {
7          . . .
8          dev_info_t *dip;
9          struct reg *regp;
```

EXAMPLE 1 Using `cmn_err()` *(Continued)*

```
        . . .
};

dev_t dev;
struct xxstate *xsp;
  . . .
#ifdef DEBUG    /* in debugging mode, log function call */
   cmn_err(CE_CONT, "!%s%d: xxopen function called.",
        ddi_binding_name(xsp->dip), getminor(dev));
#endif  /* end DEBUG */
  . . .
/* display device power failure on system console */
   if ((xsp->regp->csr & POWER) == OFF)
        cmn_err(CE_NOTE, "^OFF.",
             ddi_binding_name(xsp->dip), getminor(dev));
  . . .
/* display warning if device has bad VTOC */
   if (xsp->regp->csr & BADVTOC)
        cmn_err(CE_WARN, "%s%d: xxopen: Bad VTOC.",
             ddi_binding_name(xsp->dip), getminor(dev));
```

EXAMPLE 2 Using the %b conversion specification

This example shows how to use the `%b` conversion specification. Because of the leading '?' character in the format string, this message will always be logged, but it will only be displayed when the kernel is booted in verbose mode.

```
cmn_err(CE_CONT, "?reg=0x%b\n", regval, "\020\3Intr\2Err\1Enable");
```

EXAMPLE 3 Using *regval*

When *regval* is set to (decimal) `13`, the following message would be displayed:

```
reg=0xd<Intr,,Enable>
```

EXAMPLE 4 Error Routine

The third example is an error reporting routine which accepts a variable number of arguments and displays a single line error message both in the system buffer and on the system console. Note the use of `vsprintf()` to construct the error message before calling `cmn_err()`.

```
#include <sys/varargs.h>
#include <sys/ddi.h>
#include <sys/sunddi.h>
#define MAX_MSG 256;

void
xxerror(dev_info_t *dip, int level, const char *fmt, . . . )
{
    va_list     ap;
```

EXAMPLE 4 Error Routine *(Continued)*

```
    int         instance;
    char        buf[MAX_MSG], *name;

instance = ddi_get_instance(dip);
name = ddi_binding_name(dip);

/* format buf using fmt and arguments contained in ap */

va_start(ap, fmt);
vsprintf(buf, fmt, ap);
va_end(ap);

/* pass formatted string to cmn_err(9F) */

cmn_err(level, "%s%d: %s", name, instance, buf);

}
```

SEE ALSO

`dmesg`(1M), `kernel`(1M), `printf`(3C), `ddi_binding_name`(9F), `sprintf`(9F), `va_arg`(9F), `va_end`(9F), `va_start`(9F), `vsprintf`(9F)

Writing Device Drivers

WARNINGS

`cmn_err()` with the `CE_CONT` argument can be used by driver developers as a driver code debugging tool. However, using `cmn_err()` in this capacity can change system timing characteristics.

NOTES

At times, a driver may encounter error conditions requiring the attention of a primary or secondary system console monitor. These conditions may mean halting multiuser processing; however, this must be done with caution. Except during the debugging stage, a driver should never stop the system.

See the "Debugging" chapter in *Writing Device Drivers*

For severities of `CE_NOTE` and `CE_WARN`, the maximum message length is 256 bytes excluding "Note:" or "Warning:" respectively.

Any message greater than 128 bytes in length is divided into separate 128 byte messages.

BUGS

`cmn_err()` does not provide all of the functionality provided by `printf`(3C)

NAME

condvar, cv_init, cv_destroy, cv_wait, cv_signal, cv_broadcast, cv_wait_sig, cv_timedwait, cv_timedwait_sig – condition variable routines

SYNOPSIS

```
#include <sys/ksynch.h>

void cv_init(kcondvar_t *cvp, char *name, kcv_type_t type, void
     *arg);

voidcv_destroy(kcondvar_t *cvp);

void cv_wait(kcondvar_t *cvp, kmutex_t *mp);

void cv_signal(kcondvar_t *cvp);

void cv_broadcast(kcondvar_t *cvp);

int cv_wait_sig(kcondvar_t *cvp, kmutex_t *mp);

clock_t cv_timedwait(kcondvar_t *cvp, kmutex_t *mp, clock_t
     timeout);

clock_t cv_timedwait_sig(kcondvar_t *cvp, kmutex_t *mp, clock_t
     timeout);
```

INTERFACE LEVEL

Solaris DDI specific (Solaris DDI).

PARAMETERS

cvp	A pointer to an abstract data type `kcondvar_t`.
mp	A pointer to a mutual exclusion lock (`kmutex_t`), initialized by `mutex_init`(9F) and held by the caller.
name	Descriptive string. This is obsolete and should be `NULL`. (Non-`NULL` strings are legal, but they're a waste of kernel memory.)
type	The constant `CV_DRIVER`.
arg	A type-specific argument, drivers should pass arg as `NULL`.
timeout	A time, in absolute ticks since boot, when `cv_timedwait()` or `cv_timedwait_sig()` should return.

DESCRIPTION

Condition variables are a standard form of thread synchronization. They are designed to be used with mutual exclusion locks (mutexes). The associated mutex is used to ensure that a condition can be checked atomically and that the thread can block on the associated condition variable without missing either a change to the condition or a signal that the condition has changed. Condition variables must be initialized by calling `cv_init()`, and must be deallocated by calling `cv_destroy()`.

The usual use of condition variables is to check a condition (for example, device state, data structure reference count, etc.) while holding a mutex which keeps other threads from changing the condition. If the condition is such that the thread should block, `cv_wait()` is called with a related condition variable and the mutex. At some later

point in time, another thread would acquire the mutex, set the condition such that the previous thread can be unblocked, unblock the previous thread with `cv_signal()` or `cv_broadcast()`, and then release the mutex.

`cv_wait()` suspends the calling thread and exits the mutex atomically so that another thread which holds the mutex cannot signal on the condition variable until the blocking thread is blocked. Before returning, the mutex is reacquired.

`cv_signal()` signals the condition and wakes one blocked thread. All blocked threads can be unblocked by calling `cv_broadcast()`. You must acquire the mutex passed into `cv_wait()` before calling `cv_signal()` or `cv_broadcast()`.

The function `cv_wait_sig()` is similar to `cv_wait()` but returns `0` if a signal (for example, by `kill`(2)) is sent to the thread. In any case, the mutex is reacquired before returning.

The function `cv_timedwait()` is similar to `cv_wait()`, except that it returns `−1` without the condition being signaled after the timeout time has been reached.

The function `cv_timedwait_sig()` is similar to `cv_timedwait()`, and `cv_wait_sig()`, except that it returns `−1` without the condition being signaled after the timeout time has been reached, or `0` if a signal (for example, by `kill`(2)) is sent to the thread.

For both `cv_timedwait()` and `cv_timedwait_sig()`, time is in absolute clock ticks since the last system reboot. The current time may be found by calling `ddi_get_lbolt`(9F).

RETURN VALUES

`0`	For `cv_wait_sig()` and `cv_timedwait_sig()` indicates that the condition was not necessarily signaled and the function returned because a signal (as in `kill`(2)) was pending.
`−1`	For `cv_timedwait()` and `cv_timedwait_sig()` indicates that the condition was not necessarily signaled and the function returned because the timeout time was reached.
`>0`	For `cv_wait_sig()`, `cv_timedwait()` or `cv_timedwait_sig()` indicates that the condition was met and the function returned due to a call to `cv_signal()` or `cv_broadcast()`.

CONTEXT

These functions can be called from user, kernel or interrupt context. In most cases, however, `cv_wait()`, `cv_timedwait()`, `cv_wait_sig()`, and `cv_timedwait_sig()` should not be called from interrupt context, and cannot be called from a high-level interrupt context.

If `cv_wait()`, `cv_timedwait()`, `cv_wait_sig()`, or `cv_timedwait_sig()` are used from interrupt context, lower-priority interrupts will not be serviced during the wait. This means that if the thread that will eventually perform the wakeup becomes blocked on anything that requires the lower-priority interrupt, the system will hang.

For example, the thread that will perform the wakeup may need to first allocate memory. This memory allocation may require waiting for paging I/O to complete, which may require a lower-priority disk or network interrupt to be serviced. In general, situations like this are hard to predict, so it is advisable to avoid waiting on condition variables or semaphores in an interrupt context.

EXAMPLES

EXAMPLE 1 : Waiting for a flag value in a driver's unit

Here the condition being waited for is a flag value in a driver's unit structure. The condition variable is also in the unit structure, and the flag word is protected by a mutex in the unit structure.

```
mutex_enter(&un->un_lock);
while (un->un_flag & UNIT_BUSY)
   cv_wait(&un->un_cv, &un->un_lock);
un->un_flag |= UNIT_BUSY;
mutex_exit(&un->un_lock);
```

EXAMPLE 2 : Unblocking threads blocked by the code in Example 1

At some later point in time, another thread would execute the following to unblock any threads blocked by the above code.

```
mutex_enter(&un->un_lock);
un->un_flag &= ~UNIT_BUSY;
cv_broadcast(&un->un_cv);
mutex_exit(&un->un_lock);
```

SEE ALSO

`kill`(2), `ddi_get_lbolt`(9F), `mutex`(9F), `mutex_init`(9F)

Writing Device Drivers

NAME

copyb – copy a message block

SYNOPSIS

```
#include <sys/stream.h>

mblk_t *copyb(mblk_t *bp);
```

INTERFACE LEVEL

Architecture independent level 1 (DDI/DKI).

PARAMETERS

bp Pointer to the message block from which data is copied.

DESCRIPTION

`copyb()` allocates a new message block, and copies into it the data from the block that *bp* denotes. The new block will be at least as large as the block being copied. `copyb()` uses the `b_rptr` and `b_wptr` members of *bp* to determine how many bytes to copy.

RETURN VALUES

If successful, `copyb()` returns a pointer to the newly allocated message block containing the copied data. Otherwise, it returns a `NULL` pointer.

CONTEXT

`copyb()` can be called from user or interrupt context.

EXAMPLES

EXAMPLE 1 : Using copyb

For each message in the list, test to see if the downstream queue is full with the `canputnext`(9F) function (line 21). If it is not full, use `copyb` to copy a header message block, and `dupmsg`(9F) to duplicate the data to be retransmitted. If either operation fails, reschedule a timeout at the next valid interval.

Update the new header block with the correct destination address (line 34), link the message to it (line 35), and send it downstream (line 36). At the end of the list, reschedule this routine.

```
 1  struct retrans {
 2        mblk_t             *r_mp;
 3        int                r_address;
 4        queue_t            *r_outq;
 5        struct retrans     *r_next;
 6  };
 7
 8  struct protoheader {
       ...
 9     int                     h_address;
       ...
10  };
11
12  mblk_t *header;
13
14  void
15  retransmit(struct retrans *ret)
16  {
17       mblk_t *bp, *mp;
18       struct protoheader *php;
19
20       while (ret) {
21         if (!canputnext(ret->r_outq)) {   /* no room */
```

EXAMPLE 1 : Using copyb *(Continued)*

```
                ret = ret->r_next;
                continue;
        }
        bp = copyb(header);               /* copy header msg. block */
        if (bp == NULL)
              break;
        mp = dupmsg(ret->r_mp);           /* duplicate data */
        if (mp == NULL) {                 /* if unsuccessful */
             freeb(bp);                   /* free the block */
             break;
        }
        php = (struct protoheader *)bp->b_rptr;
        php->h_address = ret->r_address;   /* new header */
        bp->bp_cont = mp;                   /* link the message */
        putnext(ret->r_outq, bp);           /* send downstream */
        ret = ret->r_next;
      }
      /* reschedule */
      (void) timeout(retransmit, (caddr_t)ret, RETRANS_TIME);
}
```

SEE ALSO `allocb`(9F), `canputnext`(9F), `dupmsg`(9F)

Writing Device Drivers

STREAMS Programming Guide

NAME

copyin – copy data from a user program to a driver buffer

SYNOPSIS

```
#include <sys/types.h>
#include <sys/ddi.h>

int copyin(const void *userbuf, void *driverbuf, size_t cn);
```

INTERFACE LEVEL

Architecture independent level 1 (DDI/DKI).

PARAMETERS

userbuf	User program source address from which data is transferred.
driverbuf	Driver destination address to which data is transferred.
cn	Number of bytes transferred.

DESCRIPTION

`copyin()` copies data from a user program source address to a driver buffer. The driver developer must ensure that adequate space is allocated for the destination address.

Addresses that are word-aligned are moved most efficiently. However, the driver developer is not obligated to ensure alignment. This function automatically finds the most efficient move according to address alignment.

RETURN VALUES

Under normal conditions a `0` is returned indicating a successful copy. Otherwise, a `-1` is returned if one of the following occurs:

- paging fault; the driver tried to access a page of memory for which it did not have read or write access
- invalid user address, such as a user area or stack area
- invalid address that would have resulted in data being copied into the user block

If a `-1` is returned to the caller, driver entry point routines should return `EFAULT`.

CONTEXT

`copyin()` can be called from user context only.

EXAMPLES

EXAMPLE 1 An `ioctl()` Routine

A driver `ioctl`(9E) routine (line 10) can be used to get or set device attributes or registers. In the `XX_GETREGS` condition (line 17), the driver copies the current device register values to a user data area (line 18). If the specified argument contains an invalid address, an error code is returned.

```
 1  struct device  {         /* layout of physical device registers  */
 2       int      control;   /* physical device control word  */
 3       int      status;    /* physical device status word   */
 4       short    recv_char; /* receive character from device */
 5       short    xmit_char; /* transmit character to device  */
 6  };
 7
 8  extern struct device xx_addr[];   /* phys. device regs. location */
 9    . . .
10  xx_ioctl(dev_t dev, int cmd, int arg, int mode,
```

EXAMPLE 1 An `ioctl()` Routine *(Continued)*

```
     cred_t *cred_p, int *rval_p)
              ...
 {
     register struct device *rp = &xx_addr[getminor(dev) >> 4];
     switch (cmd) {

     case XX_GETREGS: /* copy device regs. to user program */
           if (copyin(arg, rp, sizeof(struct device)))
               return(EFAULT);
           break;
              ...
     }
              ...
 }
```

SEE ALSO

`ioctl`(9E), `bcopy`(9F), `copyout`(9F), `ddi_copyin`(9F), `ddi_copyout`(9F), `uiomove`(9F).

Writing Device Drivers

NOTES

Driver writers who intend to support layered ioctls in their `ioctl`(9E) routines should use `ddi_copyin`(9F) instead.

Driver defined locks should not be held across calls to this function.

This should not be used from a streams driver. See `M_COPYIN` and `M_COPYOUT` in *STREAMS Programming Guide*.

NAME

copymsg – copy a message

SYNOPSIS

```
#include <sys/stream.h>

mblk_t *copymsg(mblk_t *mp);
```

INTERFACE LEVEL

Architecture independent level 1 (DDI/DKI).

PARAMETERS

mp Pointer to the message to be copied.

DESCRIPTION

`copymsg()` forms a new message by allocating new message blocks, and copying the contents of the message referred to by *mp* (using the `copyb`(9F) function). It returns a pointer to the new message.

RETURN VALUES

If the copy is successful, `copymsg()` returns a pointer to the new message. Otherwise, it returns a `NULL` pointer.

CONTEXT

`copymsg()` can be called from user or interrupt context.

EXAMPLES

EXAMPLE 1 : Using copymsg

The routine `lctouc()` converts all the lowercase ASCII characters in the message to uppercase. If the reference count is greater than one (line 8), then the message is shared, and must be copied before changing the contents of the data buffer. If the call to the `copymsg()` function fails (line 9), return `NULL` (line 10), otherwise, free the original message (line 11). If the reference count was equal to `1`, the message can be modified. For each character (line 16) in each message block (line 15), if it is a lowercase letter, convert it to an uppercase letter (line 18). A pointer to the converted message is returned (line 21).

```
 1 mblk_t *lctouc(mp)
 2    mblk_t *mp;
 3 {
 4    mblk_t *cmp;
 5    mblk_t *tmp;
 6    unsigned char *cp;
 7
 8    if (mp->b_datap->db_ref > 1) {
 9            if ((cmp = copymsg(mp)) == NULL)
10                    return (NULL);
11            freemsg(mp);
12    } else {
13            cmp = mp;
14    }
15    for (tmp = cmp; tmp; tmp = tmp->b_cont) {
16            for (cp = tmp->b_rptr; cp < tmp->b_wptr; cp++) {
17                    if ((*cp <= 'z') && (*cp >= 'a'))
18                            *cp -= 0x20;
19            }
20    }
21    return(cmp);
22 }
```

EXAMPLE 1 : Using copymsg *(Continued)*

SEE ALSO

`allocb`(9F), `copyb`(9F), `msgb`(9S)

Writing Device Drivers

STREAMS Programming Guide

NAME

copyout – copy data from a driver to a user program

SYNOPSIS

```
#include <sys/types.h>
#include <sys/ddi.h>

int copyout(const void *driverbuf, void *userbuf, size_t cn);
```

INTERFACE LEVEL

Architecture independent level 1 (DDI/DKI).

PARAMETERS

driverbuf Source address in the driver from which the data is transferred.

userbuf Destination address in the user program to which the data is transferred.

cn Number of bytes moved.

DESCRIPTION

`copyout()` copies data from driver buffers to user data space.

Addresses that are word-aligned are moved most efficiently. However, the driver developer is not obligated to ensure alignment. This function automatically finds the most efficient move algorithm according to address alignment.

RETURN VALUES

Under normal conditions a `0` is returned to indicate a successful copy. Otherwise, a `-1` is returned if one of the following occurs:

- paging fault; the driver tried to access a page of memory for which it did not have read or write access
- invalid user address, such as a user area or stack area
- invalid address that would have resulted in data being copied into the user block

If a `-1` is returned to the caller, driver entry point routines should return `EFAULT`.

CONTEXT

`copyout()` can be called from user context only.

EXAMPLES

EXAMPLE 1 An `ioctl()` Routine

A driver `ioctl`(9E) routine (line 10) can be used to get or set device attributes or registers. In the `XX_GETREGS` condition (line 17), the driver copies the current device register values to a user data area (line 18). If the specified argument contains an invalid address, an error code is returned.

```
 1  struct device  {      /* layout of physical device registers  */
 2       int      control;     /* physical device control word  */
 3       int      status;      /* physical device status word   */
 4       short    recv_char;   /* receive character from device */
 5       short    xmit_char;   /* transmit character to device  */
 6  };
 7
 8  extern struct device xx_addr[]; /* phys. device regs. location */
 9    . . .
10  xx_ioctl(dev_t dev, int cmd, int arg, int mode,
11      cred_t *cred_p, int *rval_p)
12              ...
13  {
```

EXAMPLE 1 An `ioctl()` Routine *(Continued)*

```
14      register struct device *rp = &xx_addr[getminor(dev) >> 4];
15      switch (cmd) {
16
17      case XX_GETREGS:     /* copy device regs. to user program */
18            if (copyout(rp, arg, sizeof(struct device)))
19                return(EFAULT);
20            break;
21               ...
22      }
23               ...
24  }
```

SEE ALSO

`ioctl`(9E), `bcopy`(9F), `copyin`(9F), `ddi_copyin`(9F), `ddi_copyout`(9F), `uiomove`(9F)

Writing Device Drivers

NOTES

Driver writers who intend to support layered ioctls in their `ioctl`(9E) routines should use `ddi_copyout`(9F) instead.

Driver defined locks should not be held across calls to this function.

This should not be used from a streams driver. See `M_COPYIN` and `M_COPYOUT` in *STREAMS Programming Guide*.

NAME

csx_AccessConfigurationRegister – read or write a PC Card Configuration Register

SYNOPSIS

```
#include <sys/pccard.h>

int32_t csx_AccessConfigurationRegister(client_handle_t ch,
    access_config_reg_t *acr);
```

INTERFACE LEVEL

Solaris DDI Specific (Solaris DDI)

PARAMETERS

ch Client handle returned from `csx_RegisterClient`(9F).

acr Pointer to an `access_config_reg_t` structure.

DESCRIPTION

This function allows a client to read or write a PC Card Configuration Register.

STRUCTURE MEMBERS

The structure members of `access_config_reg_t` are:

```
uint32_t     Socket;     /* socket number*/
uint32_t     Action;     /* register access operation*/
uint32_t     Offset;     /* config register offset*/
uint32_t     Value;      /* value read or written*/
```

The fields are defined as follows:

`Socket` Not used in Solaris, but for portability with other Card Services implementations, it should be set to the logical socket number.

`Action` May be set to `CONFIG_REG_READ` or `CONFIG_REG_WRITE`. All other values in the `Action` field are reserved for future use. If the `Action` field is set to `CONFIG_REG_WRITE`, the `Value` field is written to the specified configuration register. Card Services does not read the configuration register after a write operation. For that reason, the `Value` field is only updated by a `CONFIG_REG_READ` request.

`Offset` Specifies the byte offset for the desired configuration register from the PC Card configuration register base specified in `csx_RequestConfiguration`(9F).

`Value` Contains the value read from the PC Card Configuration Register for a read operation. For a write operation, the `Value` field contains the value to write to the configuration register. As noted above, on return from a write request, the `Value` field is the value written to the PC Card and not any changed value that may have resulted from the write request (that is, no read after write is performed).

A client must be very careful when writing to the COR (Configuration Option Register) at offset `0`. This has the potential to change the type of interrupt request generated by the PC Card or place the card in the reset state. Either request may have undefined results. The client should read the register to determine the appropriate setting for the interrupt mode (Bit 6) before writing to the register.

If a client wants to reset a PC Card, the `csx_ResetFunction`(9F) function should be used. Unlike `csx_AccessConfigurationRegister()`, the `csx_ResetFunction`(9F) function generates a series of event notifications to all clients using the PC Card, so they can re-establish the appropriate card state after the reset operation is complete.

RETURN VALUES

`CS_SUCCESS`	Successful operation.
`CS_BAD_ARGS`	Specified arguments are invalid. Client specifies an `Offset` that is out of range or neither `CONFIG_REG_READ` or `CONFIG_REG_WRITE` is set.
`CS_UNSUPPORTED_MODE`	Client has not called `csx_RequestConfiguration`(9F) before calling this function.
`CS_BAD_HANDLE`	Client handle is invalid.
`CS_NO_CARD`	No PC card in socket.
`CS_UNSUPPORTED_FUNCTION`	No PCMCIA hardware installed.

CONTEXT

This function may be called from user or kernel context.

SEE ALSO

`csx_ParseTuple`(9F), `csx_RegisterClient`(9F), `csx_RequestConfiguration`(9F), `csx_ResetFunction`(9F)

PCCard 95 Standard, PCMCIA/JEIDA

NAME

csx_ConvertSize – convert device sizes

SYNOPSIS

```
#include <sys/pccard.h>

int32_t csx_ConvertSize(convert_size_t *cs);
```

INTERFACE LEVEL

Solaris DDI Specific (Solaris DDI)

PARAMETERS

cs Pointer to a `convert_size_t` structure.

DESCRIPTION

`csx_ConvertSize()` is a Solaris-specific extension that provides a method for clients to convert from one type of device size representation to another, that is, from *devsize* format to *bytes* and vice versa.

STRUCTURE MEMBERS

The structure members of `convert_size_t` are:

```
uint32_t    Attributes;
uint32_t    bytes;
uint32_t    devsize;
```

The fields are defined as follows:

`Attributes` This is a bit-mapped field that identifies the type of size conversion to be performed. The field is defined as follows:

`CONVERT_BYTES_TO_DEVSIZE`
Converts *bytes* to *devsize* format.

`CONVERT_DEVSIZE_TO_BYTES`
Converts *devsize* format to *bytes*.

`bytes` If `CONVERT_BYTES_TO_DEVSIZE` is set, the value in the `bytes` field is converted to a *devsize* format and returned in the `devsize` field.

`devsize` If `CONVERT_DEVSIZE_TO_BYTES` is set, the value in the `devsize` field is converted to a *bytes* value and returned in the `bytes` field.

RETURN VALUES

`CS_SUCCESS`	Successful operation.
`CS_BAD_SIZE`	Invalid *bytes* or *devsize*.
`CS_UNSUPPORTED_FUNCTION`	No PCMCIA hardware installed.

CONTEXT

This function may be called from user or kernel context.

SEE ALSO

`csx_ModifyWindow`(9F), `csx_RequestWindow`(9F)

PCCard 95 Standard, PCMCIA/JEIDA

NAME

csx_ConvertSpeed – convert device speeds

SYNOPSIS

```
#include <sys/pccard.h>

int32_t csx_ConvertSpeed(convert_speed_t *cs);
```

INTERFACE LEVEL

Solaris DDI Specific (Solaris DDI)

PARAMETERS

cs Pointer to a `convert_speed_t` structure.

DESCRIPTION

This function is a Solaris-specific extension that provides a method for clients to convert from one type of device speed representation to another, that is, from *devspeed* format to *nS* and vice versa.

STRUCTURE MEMBERS

The structure members of `convert_speed_t` are:

```
uint32_t     Attributes;
uint32_t     nS;
uint32_t     devspeed;
```

The fields are defined as follows:

`Attributes` This is a bit-mapped field that identifies the type of speed conversion to be performed. The field is defined as follows:

`CONVERT_NS_TO_DEVSPEED`
Converts *nS* to *devspeed* format

`CONVERT_DEVSPEED_TO_NS`
Converts *devspeed* format to *nS*

`nS` If `CONVERT_NS_TO_DEVSPEED` is set, the value in the `nS` field is converted to a *devspeed* format and returned in the `devspeed` field.

`devspeed` If `CONVERT_DEVSPEED_TO_NS` is set, the value in the `devspeed` field is converted to an *nS* value and returned in the `nS` field.

RETURN VALUES

`CS_SUCCESS`	Successful operation.
`CS_BAD_SPEED`	Invalid *nS* or *devspeed*.
`CS_BAD_ATTRIBUTE`	Bad `Attributes` value.
`CS_UNSUPPORTED_FUNCTION`	No PCMCIA hardware installed.

CONTEXT

This function may be called from user or kernel context.

SEE ALSO

`csx_ModifyWindow`(9F), `csx_RequestWindow`(9F)

PC Card 95 Standard, PCMCIA/JEIDA

NAME

csx_CS_DDI_Info – obtain DDI information

SYNOPSIS

```
#include <sys/pccard.h>

int32_t csx_CS_DDI_Info(cs_ddi_info_t *cdi);
```

INTERFACE LEVEL

Solaris DDI Specific (Solaris DDI)

PARAMETERS

cdi Pointer to a `cs_ddi_info_t` structure.

DESCRIPTION

This function is a Solaris-specific extension that is used by clients that need to provide the *xx_getinfo* driver entry point (see `getinfo`(9E)). It provides a method for clients to obtain DDI information based on their socket number and client driver name.

STRUCTURE MEMBERS

The structure members of `cs_ddi_info_t` are:

```
uint32_t     Socket;        /* socket number */
char*        driver_name;   /* unique driver name */
dev_info_t   *dip;          /* dip */
int32_t      instance;      /* instance */
```

The fields are defined as follows:

`Socket` This field must be set to the physical socket number that the client is interested in getting information about.

`driver_name` This field must be set to a string containing the name of the client driver to get information about.

If `csx_CS_DDI_Info()` is used in a client's *xx_getinfo* function, then the client will typically extract the `Socket` value from the **arg* argument and it *must* set the `driver_name` field to the same string used with `csx_RegisterClient`(9F).

If the `driver_name` is found on the `Socket`, the `csx_CS_DDI_Info()` function returns both the `dev_info` pointer and the `instance` fields for the requested driver instance.

RETURN VALUES

`CS_SUCCESS`	Successful operation.
`CS_BAD_SOCKET`	Client not found on `Socket`.
`CS_UNSUPPORTED_FUNCTION`	No PCMCIA hardware installed.

CONTEXT

This function may be called from user or kernel context.

EXAMPLES

EXAMPLE 1 : Using csx_CS_DDI_Info

The following example shows how a client might call the `csx_CS_DDI_Info()` in the client's *xx_getinfo* function to return the dip or the instance number:

```
static int
pcepp_getinfo(dev_info_t *dip, ddi_info_cmd_t cmd, void *arg,
                                                    void **result)
{
        int                         error = DDI_SUCCESS;
```

EXAMPLE 1 : Using csx_CS_DDI_Info *(Continued)*

```
        pcepp_state_t                *pps;
        cs_ddi_info_t                cs_ddi_info;

    switch (cmd) {

        case DDI_INFO_DEVT2DEVINFO:
           cs_ddi_info.Socket = getminor((dev_t)arg) & 0x3f;
           cs_ddi_info.driver_name = pcepp_name;
           if (csx_CS_DDI_Info(&cs_ddi_info) != CS_SUCCESS)
                    return (DDI_FAILURE);
           if (!(pps = ddi_get_soft_state(pcepp_soft_state_p,
                         cs_ddi_info.instance))) {
                     *result = NULL;
           } else {
                     *result = pps->dip;
           }
           break;

        case DDI_INFO_DEVT2INSTANCE:
           cs_ddi_info.Socket = getminor((dev_t)arg) & 0x3f;
           cs_ddi_info.driver_name = pcepp_name;
           if (csx_CS_DDI_Info(&cs_ddi_info) != CS_SUCCESS)
                         return (DDI_FAILURE);
           *result = (void *)cs_ddi_info.instance;
           break;

        default:
           error = DDI_FAILURE;
           break;

    }

        return (error);
}
```

SEE ALSO

`getinfo`(9E), `csx_RegisterClient`(9F), `ddi_get_instance`(9F)

PC Card 95 Standard, PCMCIA/JEIDA

NAME

csx_DeregisterClient – remove client from Card Services list

SYNOPSIS

```
#include <sys/pccard.h>

int32_t csx_DeregisterClient(client_handle_t ch);
```

INTERFACE LEVEL

Solaris DDI Specific (Solaris DDI)

PARAMETERS

ch Client handle returned from `csx_RegisterClient`(9F).

DESCRIPTION

This function removes a client from the list of registered clients maintained by Card Services. The Client Handle returned by `csx_RegisterClient`(9F) is passed in the `client_handle_t` argument.

The client must have returned all requested resources before this function is called. If any resources have not been released, `CS_IN_USE` is returned.

RETURN VALUES

`CS_SUCCESS`	Successful operation.
`CS_BAD_HANDLE`	Client handle is invalid.
`CS_IN_USE`	Resources not released by this client.
`CS_UNSUPPORTED_FUNCTION`	No PCMCIA hardware installed.

CONTEXT

This function may be called from user or kernel context.

SEE ALSO

`csx_RegisterClient`(9F)

PC Card 95 Standard, PCMCIA/JEIDA

WARNINGS

Clients should be prepared to receive callbacks until Card Services returns from this request successfully.

NAME

csx_DupHandle – duplicate access handle

SYNOPSIS

```
#include <sys/pccard.h>

int32_t csx_DupHandle(acc_handle_t handle1, acc_handle_t *handle2,
     uint32_t flags);
```

INTERFACE LEVEL

Solaris DDI Specific (Solaris DDI)

PARAMETERS

handle1 The access handle returned from `csx_RequestIO`(9F) or `csx_RequestWindow`(9F) that is to be duplicated.

handle2 A pointer to the newly-created duplicated data access handle.

flags The access attributes that will be applied to the new handle.

DESCRIPTION

This function duplicates the handle, *handle1*, into a new handle, *handle2*, that has the access attributes specified in the *flags* argument. Both the original handle and the new handle are active and can be used with the common access functions.

Both handles must be explicitly freed when they are no longer necessary.

The *flags* argument is bit-mapped. The following bits are defined:

```
WIN_ACC_NEVER_SWAP       Host endian byte ordering
WIN_ACC_BIG_ENDIAN       Big endian byte ordering
WIN_ACC_LITTLE_ENDIAN    Little endian byte ordering
WIN_ACC_STRICT_ORDER     Program ordering references
WIN_ACC_UNORDERED_OK     May re-order references
WIN_ACC_MERGING_OK       Merge stores to consecutive locations
WIN_ACC_LOADCACHING_OK   May cache load operations
WIN_ACC_STORECACHING_OK  May cache store operations
```

`WIN_ACC_BIG_ENDIAN` and `WIN_ACC_LITTLE_ENDIAN` describe the endian characteristics of the device as big endian or little endian, respectively. Even though most of the devices will have the same endian characteristics as their busses, there are examples of devices with an I/O processor that has opposite endian characteristics of the busses. When `WIN_ACC_BIG_ENDIAN` or `WIN_ACC_LITTLE_ENDIAN` is set, byte swapping will automatically be performed by the system if the host machine and the device data formats have opposite endian characteristics. The implementation may take advantage of hardware platform byte swapping capabilities. When `WIN_ACC_NEVER_SWAP` is specified, byte swapping will not be invoked in the data access functions. The ability to specify the order in which the CPU will reference data is provided by the following *flags* bits. Only one of the following bits may be specified:

`WIN_ACC_STRICT_ORDER` The data references must be issued by a CPU in program order. Strict ordering is the default behavior.

`WIN_ACC_UNORDERED_OK` The CPU may re-order the data references. This includes all kinds of re-ordering (that is, a load followed by a store may be replaced by a store followed by a load).

`WIN_ACC_MERGING_OK`	The CPU may merge individual stores to consecutive locations. For example, the CPU may turn two consecutive byte stores into one halfword store. It may also batch individual loads. For example, the CPU may turn two consecutive byte loads into one halfword load. Setting this bit also implies re-ordering.
`WIN_ACC_LOADCACHING_OK`	The CPU may cache the data it fetches and reuse it until another store occurs. The default behavior is to fetch new data on every load. Setting this bit also implies merging and re-ordering.
`WIN_ACC_STORECACHING_OK`	The CPU may keep the data in the cache and push it to the device (perhaps with other data) at a later time. The default behavior is to push the data right away. Setting this bit also implies load caching, merging, and re-ordering.

These values are advisory, not mandatory. For example, data can be ordered without being merged or cached, even though a driver requests unordered, merged and cached together.

RETURN VALUES

`CS_SUCCESS`
Successful operation.

`CS_FAILURE`
Error in *flags* argument or handle could not be duplicated for some reason.

`CS_UNSUPPORTED_FUNCTION`
No PCMCIA hardware installed.

CONTEXT

This function may be called from user or kernel context.

SEE ALSO

`csx_Get8`(9F), `csx_GetMappedAddr`(9F), `csx_Put8`(9F), `csx_RepGet8`(9F), `csx_RepPut8`(9F), `csx_RequestIO`(9F), `csx_RequestWindow`(9F)

PC Card 95 Standard, PCMCIA/JEIDA

NAME

csx_Error2Text – convert error return codes to text strings

SYNOPSIS

```
#include <sys/pccard.h>

int32_t csx_Error2Text(error2text_t *er);
```

INTERFACE LEVEL

Solaris DDI Specific (Solaris DDI)

PARAMETERS

er Pointer to an `error2text_t` structure.

DESCRIPTION

This function is a Solaris-specific extension that provides a method for clients to convert Card Services error return codes to text strings.

STRUCTURE MEMBERS

The structure members of `error2text_t` are:

```
uint32_t     item;                          /*the error code*/
char         test[CS_ERROR_MAX_BUFSIZE};    /*the error code*/
```

A pointer to the text for the Card Services error return code in the `item` field is returned in the `text` field if the error return code is found. The client is not responsible for allocating a buffer to hold the text. If the Card Services error return code specified in the item field is not found, the `text` field will be set to a string of the form:

"{*unknown Card Services return code*}"

RETURN VALUES

`CS_SUCCESS`	Successful operation.
`CS_UNSUPPORTED_FUNCTION`	No PCMCIA hardware installed.

CONTEXT

This function may be called from user or kernel context.

EXAMPLES

EXAMPLE 1 : Using the csxError2Text function

```
if ((ret = csx_RegisterClient(&client_handle, &
       client_reg)) != CS_SUCCESS)
{
   error2text_t error2text;
   error2text.item = ret;
   csx_Error2Text(&error2text);
   cmn_err(CE_CONT, "RegisterClient failed %s (0x%x)",
       error2text.text, ret);
}
```

SEE ALSO

`csx_Event2Text`(9F)

PC Card 95 Standard, PCMCIA/JEIDA

NAME

csx_Event2Text – convert events to text strings

SYNOPSIS

```
#include <sys/pccard.h>

int32_t csx_Event2Text(event2text_t *ev);
```

INTERFACE LEVEL

Solaris DDI Specific (Solaris DDI)

PARAMETERS

ev Pointer to an `event2text_t` structure.

DESCRIPTION

This function is a Solaris-specific extension that provides a method for clients to convert Card Services events to text strings.

STRUCTURE MEMBERS

The structure members of `event2text_t` are:

```
event_t     event;                      /*the event code*/
char        text[CS_EVENT_MAX_BUFSIZE]  /*the event code*/
```

The fields are defined as follows:

`event` The text for the event code in the `event` field is returned in the `text` field.

`text` The text string describing the name of the event.

RETURN VALUES

`CS_SUCCESS`	Successful operation.
`CS_UNSUPPORTED_FUNCTION`	No PCMCIA hardware installed.

CONTEXT

This function may be called from user or kernel context.

EXAMPLES

EXAMPLE 1 : Using `csx_Event2Text()`

```
xx_event(event_t event, int priority, event_callback_args_t *eca)
{
        event2text_t    event2text;

        event2text.event = event;
        csx_Event2Text(&event2text);
        cmn_err(CE_CONT, "event %s (0x%x)", event2text.text, (int)event);
}
```

SEE ALLOW

`csx_event_handler`(9E), `csx_Error2Text`(9F)

PC Card 95 Standard, PCMCIA/JEIDA

NAME

csx_FreeHandle – free access handle

SYNOPSIS

```
#include <sys/pccard.h>

int32_t csx_FreeHandle(acc_handle_t *handle);
```

INTERFACE LEVEL

Solaris DDI Specific (Solaris DDI)

PARAMETERS

handle The access handle returned from `csx_RequestIO`(9F), `csx_RequestWindow`(9F), or `csx_DupHandle`(9F).

DESCRIPTION

This function frees the handle, *handle*. If the handle was created by the `csx_DupHandle`(9F) function, this function will free the storage associated with this handle, but will not modify any resources that the original handle refers to. If the handle was created by a common access setup function, this function will release the resources associated with this handle.

RETURN VALUES

`CS_SUCCESS`	Successful operation.
`CS_UNSUPPORTED_FUNCTION`	No PCMCIA hardware installed.

CONTEXT

This function may be called from user or kernel context.

SEE ALSO

`csx_DupHandle`(9F), `csx_RequestIO`(9F), `csx_RequestWindow`(9F)

PC Card95 Standard, PCMCIA/JEIDA

NAME

csx_Get8, csx_Get16, csx_Get32, csx_Get64 – read data from device address

SYNOPSIS

```
#include <sys/pccard.h>

uint8_t csx_Get8(acc_handle_t handle, uint32_t offset);

uint16_t csx_Get16(acc_handle_t handle, uint32_t offset);

uint32_t csx_Get32(acc_handle_t handle, uint32_t offset);

uint64_t csx_Get64(acc_handle_t handle, uint64_t offset);
```

INTERFACE LEVEL

Solaris DDI Specific (Solaris DDI)

PARAMETERS

handle The access handle returned from `csx_RequestIO`(9F), `csx_RequestWindow`(9F), or `csx_DupHandle`(9F).

offset The offset in bytes from the base of the mapped resource.

DESCRIPTION

These functions generate a read of various sizes from the mapped memory or device register.

The `csx_Get8()`, `csx_Get16()`, `csx_Get32()`, and `csx_Get64()` functions read 8 bits, 16 bits, 32 bits, and 64 bits of data, respectively, from the device address represented by the handle, *handle*, at an offset in bytes represented by the offset, *offset*.

Data that consists of more than one byte will automatically be translated to maintain a consistent view between the host and the device based on the encoded information in the data access handle. The translation may involve byte swapping if the host and the device have incompatible endian characteristics.

RETURN VALUES

These functions return the value read from the mapped address.

CONTEXT

These functions may be called from user, kernel, or interrupt context.

SEE ALSO

`csx_DupHandle`(9F), `csx_GetMappedAddr`(9F), `csx_Put8`(9F), `csx_RepGet8`(9F), `csx_RepPut8`(9F), `csx_RequestIO`(9F), `csx_RequestWindow`(9F)

PC Card 95 Standard, PCMCIA/JEIDA

NAME

csx_GetFirstClient, csx_GetNextClient – return first or next client

SYNOPSIS

```
#include <sys/pccard.h>

int32_t csx_GetFirstClient(get_firstnext_client_t *fnc);

int32_t csx_GetNextClient(get_firstnext_client_t *fnc);
```

INTERFACE LEVEL

Solaris DDI Specific (Solaris DDI)

PARAMETERS

fnc Pointer to a `get_firstnext_client_t` structure.

DESCRIPTION

The functions `csx_GetFirstClient()` and `csx_GetNextClient()` return information about the first or subsequent PC cards, respectively, that are installed in the system.

STRUCTURE MEMBERS

The structure members of `get_firstnext_client_t` are:

```
uint32_t          Socket;          /* socket number */
uint32_t          Attributes;      /* attributes */
client_handle_t   client_handle;   /* client handle */
uint32_t          num_clients;     /* number of clients */
```

The fields are defined as follows:

`Socket` If the `CS_GET_FIRSTNEXT_CLIENT_SOCKET_ONLY` attribute is set, return information only on the PC card installed in this socket.

`Attributes` This field indicates the type of client. The field is bit-mapped; the following bits are defined:

CS_GET_FIRSTNEXT_CLIENT_ALL_CLIENTS
Return information on all clients.

CS_GET_FIRSTNEXT_CLIENT_SOCKET_ONLY
Return client information for the specified socket only.

`client_handle` The client handle of the PC card driver is returned in this field.

`num_clients` The number of clients is returned in this field.

RETURN VALUES

`CS_SUCCESS`	Successful operation.
`CS_BAD_HANDLE`	Client handle is invalid.
`CS_BAD_SOCKET`	Socket number is invalid.
`CS_NO_CARD`	No PC Card in socket.
`CS_NO_MORE_ITEMS`	PC Card driver does not handle the `CS_EVENT_CLIENT_INFO` event.
`CS_UNSUPPORTED_FUNCTION`	No PCMCIA hardware installed.

CONTEXT

This function may be called from user or kernel context.

SEE ALSO

`csx_event_handler`(9E)

PC Card 95 Standard, PCMCIA/JEIDA

NAME

csx_GetFirstTuple, csx_GetNextTuple – return Card Information Structure tuple

SYNOPSIS

```
#include <sys/pccard.h>
```

```
int32_t csx_GetFirstTuple(client_handle_t ch, tuple_t *tu);
```

```
int32_t csx_GetNextTuple(client_handle_t ch, tuple_t *tu);
```

INTERFACE LEVEL

Solaris DDI Specific (Solaris DDI)

PARAMETERS

ch Client handle returned from `csx_RegisterClient`(9F).

tu Pointer to a `tuple_t` structure.

DESCRIPTION

The functions `csx_GetFirstTuple()` and `csx_GetNextTuple()` return the first and next tuple, respectively, of the specified type in the Card Information Structure (CIS) for the specified socket.

STRUCTURE MEMBERS

The structure members of `tuple_t` are:

```
uint32_t    Socket;        /* socket number */
uint32_t    Attributes;    /* Attributes */
cisdata_t   DesiredTuple;  /* tuple to search for or flags */
cisdata_t   TupleCode;     /* tuple type code */
cisdata_t   TupleLink;     /* tuple data body size */
```

The fields are defined as follows:

`Socket`

Not used in Solaris, but for portability with other Card Services implementations, it should be set to the logical socket number.

`Attributes`

This field is bit-mapped. The following bits are defined:

TUPLE_RETURN_LINK

Return link tuples if set. The following are link tuples and will only be returned by this function if the `TUPLE_RETURN_LINK` bit in the `Attributes` field is set:

```
CISTPL_NULL     CISTPL_LONGLINK_MFC
CISTPL_LONGLINK_A    CISTPL_LINKTARGET
CISTPL_LONGLINK_C    CISTPL_NO_LINK
CISTPL_LONGLINK_CB    CISTPL_END
```

TUPLE_RETURN_IGNORED_TUPLES

Return ignored tuples if set. Ignored tuples will be returned by this function if the `TUPLE_RETURN_IGNORED_TUPLES` bit in the `Attributes` field is set, see `tuple`(9S)for more information. The CIS is parsed from the location setup by the previous `csx_GetFirstTuple()` or `csx_GetNextTuple()` request.

`DesiredTuple`

This field is the tuple value desired. If it is `RETURN_FIRST_TUPLE`, the very first tuple of the CIS is returned (if it exists). If this field is set to `RETURN_NEXT_TUPLE`,

the very next tuple of the CIS is returned (if it exists). If the `DesiredTuple` field is any other value on entry, the CIS is searched in an attempt to locate a tuple which matches.

`TupleCode,TupleLink`
: These fields are the values returned from the tuple found. If there are no tuples on the card, `CS_NO_MORE_ITEMS` is returned.

Since the `csx_GetFirstTuple()`, `csx_GetNextTuple()`, and `csx_GetTupleData`(9F) functions all share the same `tuple_t` structure, some fields in the `tuple_t` structure are unused or reserved when calling this function and these fields must not be initialized by the client.

RETURN VALUES

`CS_SUCCESS`	Successful operation.
`CS_BAD_HANDLE`	Client handle is invalid.
`CS_NO_CARD`	No PC Card in socket.
`CS_NO_CIS`	No Card Information Structure (CIS) on PC card.
`CS_NO_MORE_ITEMS`	Desired tuple not found.
`CS_UNSUPPORTED_FUNCTION`	No PCMCIA hardware installed.

CONTEXT

These functions may be called from user or kernel context.

SEE ALSO

`csx_GetTupleData`(9F), `csx_ParseTuple`(9F), `csx_RegisterClient`(9F), `csx_ValidateCIS`(9F), `tuple`(9S)

PC Card 95Standard, PCMCIA/JEIDA

NAME

csx_GetHandleOffset – return current access handle offset

SYNOPSIS

```
#include <sys/pccard.h>

int32_t csx_GetHandleOffset(acc_handle_t handle, uint32_t *offset);
```

INTERFACE LEVEL

Solaris DDI Specific (Solaris DDI)

PARAMETERS

handle Access handle returned by `csx_RequestIRQ`(9F) or `csx_RequestIO`(9F).

offset Pointer to a `uint32_t` in which the current access handle offset is returned.

DESCRIPTION

This function returns the current offset for the access handle, *handle*, in *offset*.

RETURN VALUES

`CS_SUCCESS`
Successful operation.

CONTEXT

This function may be called from user or kernel context.

SEE ALSO

`csx_RequestIO`(9F), `csx_RequestIRQ`(9F), `csx_SetHandleOffset`(9F)

PC Card 95 Standard, PCMCIA/JEIDA

NAME

csx_GetMappedAddr – return mapped virtual address

SYNOPSIS

```
#include <sys/pccard.h>

int32_t csx_GetMappedAddr(acc_handle_t handle, void **addr);
```

INTERFACE LEVEL

Solaris DDI Specific (Solaris DDI)

PARAMETERS

handle The access handle returned from `csx_RequestIO`(9F), `csx_RequestWindow`(9F), or `csx_DupHandle`(9F).

addr The virtual or I/O port number represented by the handle.

DESCRIPTION

This function returns the mapped virtual address or the mapped I/O port number represented by the handle, *handle*.

RETURN VALUES

`CS_SUCCESS`	The resulting address or I/O port number can be directly accessed by the caller.
`CS_FAILURE`	The resulting address or I/O port number can not be directly accessed by the caller; the caller must make all accesses to the mapped area via the common access functions.
`CS_UNSUPPORTED_FUNCTION`	No PCMCIA hardware installed.

CONTEXT

This function may be called from user, kernel, or interrupt context.

SEE ALSO

`csx_DupHandle`(9F), `csx_Get8`(9F), `csx_Put8`(9F), `csx_RepGet8`(9F), `csx_RepPut8`(9F), `csx_RequestIO`(9F), `csx_RequestWindow`(9F)

PC Card 95 Standard, PCMCIA/JEIDA

NAME

csx_GetStatus – return the current status of a PC Card and its socket

SYNOPSIS

```
#include <sys/pccard.h>

int32_t csx_GetStatus(client_handle_t ch, get_status_t *gs);
```

INTERFACE LEVEL

Solaris DDI Specific (Solaris DDI)

PARAMETERS

ch Client handle returned from `csx_RegisterClient`(9F).

gs Pointer to a `get_status_t` structure.

DESCRIPTION

This function returns the current status of a PC Card and its socket.

STRUCTURE MEMBERS

The structure members of `get_status_t` are:

```
uint32_t     Socket;          /* socket number*/
uint32_t     CardState;       /* "live" card status for this client*/
uint32_t     SocketState;     /* latched socket values */
uint32_t     raw_CardState;   /* raw live card status */
```

The fields are defined as follows:

`Socket` Not used in Solaris, but for portability with other Card Services implementations, it should be set to the logical socket number.

`CardState` The `CardState` field is the bit-mapped output data returned from Card Services. The bits identify what Card Services thinks the current state of the installed PC Card is. The bits are:

CS_STATUS_WRITE_PROTECTED
: Card is write protected

CS_STATUS_CARD_LOCKED
: Card is locked

CS_STATUS_EJECTION_REQUEST
: Ejection request in progress

CS_STATUS_INSERTION_REQUEST
: Insertion request in progress

CS_STATUS_BATTERY_DEAD
: Card battery is dead

CS_STATUS_BATTERY_DEAD
: Card battery is dead (BVD1)

CS_STATUS_BATTERY_LOW
: Card battery is low (BVD2)

CS_STATUS_CARD_READY
: Card is READY

CS_STATUS_CARD_INSERTED
: Card is inserted

CS_STATUS_REQ_ATTN
Extended status attention request

CS_STATUS_RES_EVT1
Extended status reserved event status

CS_STATUS_RES_EVT2
Extended status reserved event status

CS_STATUS_RES_EVT3
Extended status reserved event status

CS_STATUS_VCC_50
5.0 Volts Vcc Indicated

CS_STATUS_VCC_33
3.3 Volts Vcc Indicated

CS_STATUS_VCC_XX
X.X Volts Vcc Indicated

The state of the `CS_STATUS_CARD_INSERTED` bit indicates whether the PC Card associated with this driver instance, not just any card, is inserted in the socket. If an I/O card is installed in the specified socket, card state is returned from the PRR (Pin Replacement Register) and the ESR (Extended Status Register) (if present). If certain state bits are not present in the PRR or ESR, a simulated state bit value is returned as defined below:

CS_STATUS_WRITE_PROTECTED
Not write protected

CS_STATUS_BATTERY_DEAD
Power good

PCS_STATUS_BATTERY_LOW
Power good

CS_STATUS_CARD_READY
Ready

CS_STATUS_REQ_ATTN
Not set

CS_STATUS_RES_EVT1
Not set

CS_STATUS_RES_EVT2
Not set

CS_STATUS_RES_EVT3
Not set

`SocketState` The `SocketState` field is a bit-map of the current card and socket state. The bits are:

CS_SOCK_STATUS_WRITE_PROTECT_CHANGE
Write Protect

ECS_SOCK_STATUS_CARD_LOCK_CHANGE
Card Lock Change

CS_SOCK_STATUS_EJECTION_PENDING
Ejection Request

CS_SOCK_STATUS_INSERTION_PENDING
Insertion Request

CS_SOCK_STATUS_BATTERY_DEAD_CHANGE
Battery Dead

CS_SOCK_STATUS_BATTERY_LOW_CHANGE
Battery Low

CS_SOCK_STATUS_CARD_READY_CHANGE
Ready Change

CS_SOCK_STATUS_CARD_INSERTION_CHANGE
Card is inserted

The state reported in the SocketState field may be different from the state reported in the CardState field. Clients should normally depend only on the state reported in the CardState field.

The state reported in the `SocketState` field may be different from the state reported in the `CardState` field. Clients should normally depend only on the state reported in the `CardState` field.

`raw_CardState` The `raw_CardState` field is a Solaris-specific extension that allows the client to determine if any card is inserted in the socket. The bit definitions in the `raw_CardState` field are identical to those in the `CardState` field with the exception that the `CS_STATUS_CARD_INSERTED` bit in the `raw_CardState` field is set whenever any card is inserted into the socket.

RETURN VALUES

`CS_SUCCESS`	Successful operation.
`CS_BAD_HANDLE`	Client handle is invalid.
`CS_BAD_SOCKET`	Error getting socket state.
`CS_UNSUPPORTED_FUNCTION`	No PCMCIA hardware installed.

`CS_NO_CARD` will not be returned if there is no PC Card present in the socket.

CONTEXT

This function may be called from user or kernel context.

SEE ALSO

`csx_RegisterClient`(9F)

PC Card 95 Standard, PCMCIA/JEIDA

NAME

csx_GetTupleData – return the data portion of a tuple

SYNOPSIS

```
#include <sys/pccard.h>
```

```
int32_t csx_GetTupleData(client_handle_t ch, tuple_t *tu);
```

INTERFACE LEVEL

Solaris DDI Specific (Solaris DDI)

PARAMETERS

ch Client handle returned from `csx_RegisterClient`(9F).

tu Pointer to a `tuple_t` structure.

DESCRIPTION

This function returns the data portion of a tuple, as returned by the `csx_GetFirstTuple`(9F) and `csx_GetNextTuple`(9F) functions.

STRUCTURE MEMBERS

The structure members of `tuple_t` are:

The fields are defined as follows:

```
uint32_t   Socket;                          /* socket number */
uint32_t   Attributes;                      /* tuple attributes*/
cisdata_t  DesiredTuple;                    /* tuple to search for*/
cisdata_t  TupleOffset;                     /* tuple data offset*/
cisdata_t  TupleDataMax;                    /* max tuple data size*/
cisdata_t  TupleDataLen;                    /* actual tuple data length*/
cisdata_t  TupleData[CIS_MAX_TUPLE_DATA_LEN]; /* tuple body data buffer*/
cisdata_t  TupleCode;                       /* tuple type code*/
cisdata_t  TupleLink;                       /* tuple link */
```

`Socket` Not used in Solaris, but for portability with other Card Services implementations, it should be set to the logical socket number.

`Attributes` Initialized by `csx_GetFirstTuple`(9F) or `csx_GetNextTuple`(9F); the client must not modify the value in this field.

`DesiredTuple` Initialized by `csx_GetFirstTuple`(9F) or `csx_GetNextTuple`(9F); the client must not modify the value in this field.

`TupleOffset` This field allows partial tuple information to be retrieved, starting anywhere within the tuple.

`TupleDataMax` This field is the size of the tuple data buffer that Card Services uses to return raw tuple data from `csx_GetTupleData`(9F). It can be larger than the number of bytes in the tuple data body. Card Services ignores any value placed here by the client.

`TupleDataLen` This field is the actual size of the tuple data body. It represents the number of tuple data body bytes returned.

`TupleData`	This field is an array of bytes containing the raw tuple data body contents.
`TupleCode`	Initialized by `csx_GetFirstTuple`(9F) or `csx_GetNextTuple`(9F); the client must not modify the value in this field.
`TupleLink`	Initialized by `csx_GetFirstTuple`(9F) or `csx_GetNextTuple`(9F); the client must not modify the value in this field.

RETURN VALUES

`CS_SUCCESS`	Successful operation.
`CS_BAD_HANDLE`	Client handle is invalid.
`CS_BAD_ARGS`	Data from prior `csx_GetFirstTuple`(9F) or `csx_GetNextTuple`(9F) is corrupt.
`CS_NO_CARD`	No PC Card in socket.
`CS_NO_CIS`	No Card Information Structure (CIS) on PC Card.
`CS_NO_MORE_ITEMS`	Card Services was not able to read the tuple from the PC Card.
`CS_UNSUPPORTED_FUNCTION`	No PCMCIA hardware installed.

CONTEXT

This function may be called from user or kernel context.

SEE ALSO

`csx_GetFirstTuple`(9F), `csx_ParseTuple`(9F), `csx_RegisterClient`(9F), `csx_ValidateCIS`(9F), `tuple`(9S)

PC Card 95 Standard, PCMCIA/JEIDA

NAME

csx_MakeDeviceNode, csx_RemoveDeviceNode – create and remove minor nodes on behalf of the client

SYNOPSIS

```
#include <sys/pccard.h>
```

```
int32_t csx_MakeDeviceNode(client_handle_t ch, make_device_node_t
    *dn);
```

```
int32_t csx_RemoveDeviceNode(client_handle_t ch,
    remove_device_node_t *dn);
```

INTERFACE LEVEL

Solaris DDI Specific (Solaris DDI)

PARAMETERS

ch Client handle returned from `csx_RegisterClient`(9F).

dn Pointer to a `make_device_node_t` or `remove_device_node_t` structure.

DESCRIPTION

`csx_MakeDeviceNode()` and `csx_RemoveDeviceNode()` are Solaris-specific extensions to allow the client to request that device nodes in the filesystem are created or removed, respectively, on its behalf.

STRUCTURE MEMBERS

The structure members of `make_device_node_t` are:

```
uint32_t        Action;         /* device operation */
uint32_t        NumDevNodes;    /* number of nodes to create */
devnode_desc_t  *devnode_desc;  /* description of device nodes */
```

The structure members of `remove_device_node_t` are:

```
uint32_t       Action;          /* device operation */
uint32_t       NumDevNodes;     /* number of nodes to remove */
devnode_desc_t *devnode_desc;   /* description of device nodes */
```

The structure members of `devnode_desc_t` are:

```
char           *name;           /* device node path and name */
int32_t        spec_type;       /* device special type (block or char) */
int32_t        minor_num;       /* device node minor number */
char           *node_type;      /* device node type */
```

The `Action` field is used to specify the operation that `csx_MakeDeviceNode()` and `csx_RemoveDeviceNode()` should perform.

The following `Action` values are defined for `csx_MakeDeviceNode()`:

CREATE_DEVICE_NODE
: Create `NumDevNodes` minor nodes

The following `Action` values are defined for `csx_RemoveDeviceNode()`:

REMOVE_DEVICE_NODE
: Remove `NumDevNodes` minor nodes

REMOVE_ALL_DEVICE_NODES
: Remove all minor nodes for this client

For csx_MakeDeviceNode(), if the Action field is:

CREATE_DEVICE_NODE
: The NumDevNodes field must be set to the number of minor devices to create, and the client must allocate the quantity of devnode_desc_t structures specified by NumDevNodes and fill out the fields in the devnode_desc_t structure with the appropriate minor node information. The meanings of the fields in the devnode_desc_t structure are identical to the parameters of the same name to the ddi_create_minor_node(9F) DDI function.

For csx_RemoveDeviceNode(), if the Action field is:

REMOVE_DEVICE_NODE
: The NumDevNodes field must be set to the number of minor devices to remove, and the client must allocate the quantity of devnode_desc_t structures specified by NumDevNodes and fill out the fields in the devnode_desc_t structure with the appropriate minor node information. The meanings of the fields in the devnode_desc_t structure are identical to the parameters of the same name to the ddi_remove_minor_node(9F) DDI function.

REMOVE_ALL_DEVICE_NODES
: The NumDevNodes field must be set to 0 and the devnode_desc_t structure pointer must be set to NULL. All device nodes for this client will be removed from the filesystem.

RETURN VALUES

CS_SUCCESS	Successful operation.
CS_BAD_HANDLE	Client handle is invalid.
CS_BAD_ATTRIBUTE	The value of one or more arguments is invalid.
CS_BAD_ARGS	Action is invalid.
CS_OUT_OF_RESOURCE	Unable to create or remove device node.
CS_UNSUPPORTED_FUNCTION	No PCMCIA hardware installed.

CONTEXT

These functions may be called from user or kernel context.

SEE ALSO

csx_RegisterClient(9F), ddi_create_minor_node(9F), ddi_remove_minor_node(9F)

PC Card 95 Standard, PCMCIA/JEIDA

NAME

csx_MapLogSocket – return the physical socket number associated with the client handle

SYNOPSIS

```
#include <sys/pccard.h>

int32_t csx_MapLogSocket(client_handle_t ch, map_log_socket_t
     *ls);
```

INTERFACE LEVEL

Solaris DDI Specific (Solaris DDI)

PARAMETERS

ch Client handle returned from `csx_RegisterClient`(9F).

ls Pointer to a `map_log_socket_t` structure.

DESCRIPTION

This function returns the physical socket number associated with the client handle.

STRUCTURE MEMBERS

The structure members of `map_log_socket_t` are:

```
uint32_t     LogSocket;      /* logical socket number */
uint32_t     PhyAdapter;     /* physical adapter number */
uint32_t     PhySocket;      /* physical socket number */
```

The fields are defined as follows:

`LogSocket` Not used by this implementation of Card Services and can be set to any arbitrary value.

`PhyAdapter` Returns the physical adapter number, which is always `0` in the Solaris implementation of Card Services.

`PhySocket` Returns the physical socket number associated with the client handle. The physical socket number is typically used as part of an error or message string or if the client creates minor nodes based on the physical socket number.

RETURN VALUES

`CS_SUCCESS`	Successful operation.
`CS_BAD_HANDLE`	Client handle is invalid.
`CS_UNSUPPORTED_FUNCTION`	No PCMCIA hardware installed.

CONTEXT

This function may be called from user or kernel context.

SEE ALSO

`csx_RegisterClient`(9F)

PC Card 95 Standard, PCMCIA/JEIDA

NAME

csx_MapMemPage – map the memory area on a PC Card

SYNOPSIS

```
#include <sys/pccard.h>

int32_t csx_MapMemPage(window_handle_t wh, map_mem_page_t *mp);
```

INTERFACE LEVEL

Solaris DDI Specific (Solaris DDI)

PARAMETERS

wh Window handle returned from `csx_RequestWindow`(9F).

mp Pointer to a `map_mem_page_t` structure.

DESCRIPTION

This function maps the memory area on a PC Card into a page of a window allocated with the `csx_RequestWindow`(9F) function.

STRUCTURE MEMBERS

The structure members of `map_mem_page_t` are:

```
uint32_t     CardOffset;       /* card offset */
uint32_t     Page;             /* page number */
```

The fields are defined as follows:

`CardOffset` The absolute offset in bytes from the beginning of the PC Card to map into system memory.

`Page` Used internally by Card Services; clients must set this field to `0` before calling this function.

RETURN VALUES

`CS_SUCCESS`	Successful operation.
`CS_BAD_HANDLE`	Client handle is invalid.
`CS_BAD_OFFSET`	Offset is invalid.
`CS_BAD_PAGE`	Page is not zero.
`CS_NO_CARD`	No PC Card in socket.
`CS_UNSUPPORTED_FUNCTION`	No PCMCIA hardware installed.

CONTEXT

This function may be called from user or kernel context.

SEE ALSO

`csx_ModifyWindow`(9F), `csx_ReleaseWindow`(9F), `csx_RequestWindow`(9F)

PC Card 95 Standard, PCMCIA/JEIDA

NAME

csx_ModifyConfiguration – modify socket and PC Card Configuration Register

SYNOPSIS

```
#include <sys/pccard.h>

int32_t csx_ModifyConfiguration(client_handle_t ch,
     modify_config_t *mc);
```

INTERFACE LEVEL

Solaris DDI Specific (Solaris DDI)

PARAMETERS

ch Client handle returned from `csx_RegisterClient`(9F).

mc Pointer to a `modify_config_t` structure.

DESCRIPTION

This function allows a socket and PC Card configuration to be modified. This function can only modify a configuration requested via `csx_RequestConfiguration`(9F).

STRUCTURE MEMBERS

The structure members of `modify_config_t` are:

```
uint32_t     Socket;        /* socket number */
uint32_t     Attributes;    /* attributes to modify */
uint32_t     Vpp1;          /* Vpp1 value */
uint32_t     Vpp2;          /* Vpp2 value */
```

The fields are defined as follows:

`Socket` Not used in Solaris, but for portability with other Card Services implementations, it should be set to the logical socket number.

`Attributes` This field is bit-mapped. The following bits are defined:

CONF_ENABLE_IRQ_STEERING
: Enable IRQ steering. Set to connect the PC Card IREQ line to a previously selected system interrupt.

CONF_IRQ_CHANGE_VALID
: IRQ change valid. Set to request the IRQ steering enable to be changed.

CONF_VPP1_CHANGE_VALID
: Vpp1 change valid. These bits are set to request a change to the corresponding voltage level for the PC Card.

CONF_VPP2_CHANGE_VALID
: Vpp2 change valid. These bits are set to request a change to the corresponding voltage level for the PC Card.

CONF_VSOVERRIDE
: Override VS pins. For Low Voltage keyed cards, must be set if a client desires to apply a voltage inappropriate for this card to any pin. After card insertion and prior to the first `csx_RequestConfiguration`(9F) call for this client, the voltage levels applied to the card will be those specified by the Card Interface Specification. (See `WARNINGS`.)

`Vpp1`, `Vpp2` Represent voltages expressed in tenths of a volt. Values from `0` to `25.5` volts may be set. To be valid, the exact voltage must be available from the system. To be compliant with the *PC Card 95 Standard, PCMCIA/JEIDA*, systems must always support `5.0` volts for both `Vcc` and `Vpp`. (See `WARNINGS`.)

RETURN VALUES

`CS_SUCCESS`
Successful operation.

`CS_BAD_HANDLE`
Client handle is invalid or `csx_RequestConfiguration`(9F) not done.

`CS_BAD_SOCKET`
Error getting/setting socket hardware parameters.

`CS_BAD_VPP`
Requested `Vpp` is not available on socket.

`CS_NO_CARD`
No PC Card in socket.

`CS_UNSUPPORTED_FUNCTION`
No PCMCIA hardware installed.

CONTEXT

This function may be called from user or kernel context.

SEE ALSO

`csx_RegisterClient`(9F), `csx_ReleaseConfiguration`(9F), `csx_ReleaseIO`(9F), `csx_ReleaseIRQ`(9F), `csx_RequestConfiguration`(9F), `csx_RequestIO`(9F), `csx_RequestIRQ`(9F)

PC Card 95 Standard, PCMCIA/JEIDA

WARNINGS

1. `CONF_VSOVERRIDE` is provided for clients that have a need to override the information provided in the CIS. The client must excercise caution when setting this as it overrides any voltage level protection provided by Card Services.
2. Using `csx_ModifyConfiguration()` to set `Vpp` to `0` volts may result in the loss of a PC Card's state. Any client setting `Vpp` to `0` volts is responsible for insuring that the PC Card's state is restored when power is re-applied to the card.

NOTES

Mapped IO addresses can only be changed by first releasing the current configuration and IO resources with `csx_ReleaseConfiguration`(9F) and `csx_ReleaseIO`(9F), requesting new IO resources and a new configuration with `csx_RequestIO`(9F), followed by `csx_RequestConfiguration`(9F).

IRQ priority can only be changed by first releasing the current configuration and IRQ resources with `csx_ReleaseConfiguration`(9F) and `csx_ReleaseIRQ`(9F), requesting new IRQ resources and a new configuration with `csx_RequestIRQ`(9F), followed by `csx_RequestConfiguration`(9F).

`Vcc` can not be changed using `csx_ModifyConfiguration()`. `Vcc` may be changed by first invoking `csx_ReleaseConfiguration`(9F), followed by `csx_RequestConfiguration`(9F) with a new `Vcc` value.

NAME

csx_ModifyWindow – modify window attributes

SYNOPSIS

```
#include <sys/pccard.h>

int32_t csx_ModifyWindow(window_handle_t wh, modify_win_t *mw);
```

INTERFACE LEVEL

Solaris DDI Specific (Solaris DDI)

PARAMETERS

wh Window handle returned from `csx_RequestWindow`(9F).

mw Pointer to a `modify_win_t` structure.

DESCRIPTION

This function modifies the attributes of a window allocated by the `csx_RequestWindow`(9F) function.

Only some of the window attributes or the access speed field may be modified by this request. The `csx_MapMemPage`(9F) function is also used to set the offset into PC Card memory to be mapped into system memory for paged windows. The `csx_RequestWindow`(9F) and `csx_ReleaseWindow`(9F) functions must be used to change the window base or size.

STRUCTURE MEMBERS

The structure members of `modify_win_t` are:

```
uint32_t       Attributes;          /* window flags */
uint32_t       AccessSpeed;         /* window access speed */
```

The fields are defined as follows:

`Attributes` This field is bit-mapped and defined as follows:

WIN_MEMORY_TYPE_CM
: Window points to Common Memory area. Set this to map the window to Common Memory.

WIN_MEMORY_TYPE_AM
: Window points to Attribute Memory area. Set this to map the window to Attribute Memory.

WIN_ENABLE
: Enable Window. The client must set this to enable the window.

WIN_ACCESS_SPEED_VALID
: `AccessSpeed` valid. The client must set this when the `AccessSpeed` field has a value that the client wants set for the window.

`AccessSpeed` The bit definitions for this field use the format of the extended speed byte of the Device ID tuple. If the mantissa is `0` (noted as reserved in the *PC Card 95 Standard*), the lower bits are a binary code representing a speed from the following list:

Code	`Speed`
0	Reserved: do not use

1	250 nsec
2	200 nsec
3	150 nsec
4	100 nsec
5 - 7	Reserved: do not use

It is recommended that clients use the csx_ConvertSpeed(9F) function to generate the appropriate AccessSpeed values rather than manually perturbing the AccessSpeed field.

RETURN VALUES

CS_SUCCESS	Successful operation.
CS_BAD_HANDLE	Window handle is invalid.
CS_NO_CARD	No PC Card in socket.
CS_BAD_OFFSET	Error getting/setting window hardware parameters.
CS_BAD_WINDOW	Error getting/setting window hardware parameters.
CS_BAD_SPEED	AccessSpeed is invalid.
CS_UNSUPPORTED_FUNCTION	No PCMCIA hardware installed.

CONTEXT

This function may be called from user or kernel context.

SEE ALSO

csx_ConvertSpeed(9F), csx_MapMemPage(9F), csx_ReleaseWindow(9F), csx_RequestWindow(9F)

PC Card 95 Standard, PCMCIA/JEIDA

NAME

csx_Parse_CISTPL_BATTERY – parse the Battery Replacement Date tuple

SYNOPSIS

```
#include <sys/pccard.h>

int32_t csx_Parse_CISTPL_BATTERY(client_handle_t ch, tuple_t *tu,
    cistpl_battery_t *cb);
```

INTERFACE LEVEL

Solaris DDI Specific (Solaris DDI)

PARAMETERS

ch Client handle returned from `csx_RegisterClient`(9F).

tu Pointer to a `tuple_t` structure (see `tuple`(9S)) returned by a call to `csx_GetFirstTuple`(9F) or `csx_GetNextTuple`(9F).

cb Pointer to a `cistpl_battery_t` structure which contains the parsed `CISTPL_BATTERY` tuple information upon return from this function.

DESCRIPTION

This function parses the Battery Replacement Date tuple, `CISTPL_BATTERY`, into a form usable by PC Card drivers.

The `CISTPL_BATTERY` tuple is an optional tuple which shall be present only in PC Cards with battery-backed storage. It indicates the date on which the battery was replaced, and the date on which the battery is expected to need replacement. Only one `CISTPL_BATTERY` tuple is allowed per PC Card.

STRUCTURE MEMBERS

The structure members of `cistpl_battery_t` are:

```
uint32_t     rday;     /* date battery last replaced */
uint32_t     xday;     /* date battery due for replacement */
```

The fields are defined as follows:

`rday` This field indicates the date on which the battery was last replaced.

`xday` This field indicates the date on which the battery should be replaced.

RETURN VALUES

`CS_SUCCESS`	Successful operation.
`CS_BAD_HANDLE`	Client handle is invalid.
`CS_UNKNOWN_TUPLE`	Parser does not know how to parse tuple.
`CS_NO_CARD`	No PC Card in socket.
`CS_NO_CIS`	No Card Information Structure (CIS) on PC Card.
`CS_UNSUPPORTED_FUNCTION`	No PCMCIA hardware installed.

CONTEXT

This function may be called from user or kernel context.

SEE ALSO

`csx_GetFirstTuple`(9F), `csx_GetTupleData`(9F), `csx_RegisterClient`(9F), `csx_ValidateCIS`(9F), `tuple`(9S)

PC Card 95 Standard, PCMCIA/JEIDA

NAME

csx_Parse_CISTPL_BYTEORDER – parse the Byte Order tuple

SYNOPSIS

```
#include <sys/pccard.h>

int32_t csx_Parse_CISTPL_BYTEORDER(client_handle_t ch, tuple_t
    *tu, cistpl_byteorder_t *cbo);
```

INTERFACE LEVEL

Solaris DDI Specific (Solaris DDI)

PARAMETERS

ch Client handle returned from `csx_RegisterClient`(9F).

tu Pointer to a `tuple_t` structure (see `tuple`(9S)) returned by a call to `csx_GetFirstTuple`(9F) or `csx_GetNextTuple`(9F).

cbo Pointer to a `cistpl_byteorder_t` structure which contains the parsed `CISTPL_BYTEORDER` tuple information upon return from this function.

DESCRIPTION

This function parses the Byte Order tuple, `CISTPL_BYTEORDER`, into a form usable by PC Card drivers.

The `CISTPL_BYTEORDER` tuple shall only appear in a partition tuple set for a memory-like partition. It specifies two parameters: the order for multi-byte data, and the order in which bytes map into words for 16-bit cards.

STRUCTURE MEMBERS

The structure members of `cistpl_byteorder_t` are:

```
uint32_t     order;     /* byte order code */
uint32_t     map;       /* byte mapping code */
```

The fields are defined as follows:

`order` This field specifies the byte order for multi-byte numeric data.

TPLBYTEORD_LOW
Little endian order

TPLBYTEORD_VS
Vendor specific

`map` This field specifies the byte mapping for 16-bit or wider cards.

TPLBYTEMAP_LOW
Byte zero is least significant byte

TPLBYTEMAP_HIGH
Byte zero is most significant byte

TPLBYTEMAP_VS
Vendor specific mapping

RETURN VALUES

`CS_SUCCESS`	Successful operation.
`CS_BAD_HANDLE`	Client handle is invalid.
`CS_UNKNOWN_TUPLE`	Parser does not know how to parse tuple.
`CS_NO_CARD`	No PC Card in socket.

`CS_NO_CIS`	No Card Information Structure (CIS) PC Card.
`CS_UNSUPPORTED_FUNCTION`	No PCMCIA hardware installed.

CONTEXT

This function may be called from user or kernel context.

SEE ALSO

`csx_GetFirstTuple`(9F), `csx_GetTupleData`(9F), `csx_RegisterClient`(9F), `csx_ValidateCIS`(9F), `tuple`(9S)

PC Card 95 Standard, PCMCIA/JEIDA

NAME

csx_Parse_CISTPL_CFTABLE_ENTRY – parse 16-bit Card Configuration Table Entry tuple

SYNOPSIS

```
#include <sys/pccard.h>

int32_t csx_Parse_CISTPL_CFTABLE_ENTRY(client_handle_t ch,
    tuple_t *tu, cistpl_cftable_entry_t *cft);
```

INTERFACE LEVEL

Solaris DDI Specific (Solaris DDI)

PARAMETERS

ch Client handle returned from `csx_RegisterClient`(9F).

tu Pointer to a `tuple_t` structure (see `tuple`(9S)) returned by a call to `csx_GetFirstTuple`(9F) or `csx_GetNextTuple`(9F).

cft Pointer to a `cistpl_cftable_entry_t` structure which contains the parsed `CISTPL_CFTABLE_ENTRY` tuple information upon return from this function.

DESCRIPTION

This function parses the 16 bit Card Configuration Table Entry tuple, `CISTPL_CFTABLE_ENTRY`, into a form usable by PC Card drivers.

The `CISTPL_CFTABLE_ENTRY` tuple is used to describe each possible configuration of a PC Card and to distinguish among the permitted configurations. The `CISTPL_CONFIG` tuple must precede all `CISTPL_CFTABLE_ENTRY` tuples.

STRUCTURE MEMBERS

The structure members of `cistpl_cftable_entry_t` are:

```
uint32_t                      flags;     /* valid descriptions */
uint32_t                      ifc;       /* interface description */
                                         /*    information */
uint32_t                      pin;       /* values for PRR */
uint32_t                      index;     /* configuration index number */
cistpl_cftable_entry_pd_t     pd;        /* power requirements */
                                         /* description */
cistpl_cftable_entry_speed_t  speed;     /* device speed description */
cistpl_cftable_entry_io_t     io;        /* device I/O map */
cistpl_cftable_entry_irq_t    irq;       /* device IRQ utilization */
cistpl_cftable_entry_mem_t    mem;       /* device memory space */
cistpl_cftable_entry_misc_t   misc;      /* miscellaneous
                                         /* device features */
```

The `flags` field is defined and bit-mapped as follows:

CISTPL_CFTABLE_TPCE_DEFAULT
This is a default configuration

CISTPL_CFTABLE_TPCE_IF
If configuration byte exists

CISTPL_CFTABLE_TPCE_FS_PWR
Power information exists

CISTPL_CFTABLE_TPCE_FS_TD
Timing information exists

CISTPL_CFTABLE_TPCE_FS_IO
I/O information exists

CISTPL_CFTABLE_TPCE_FS_IRQ
IRQ information exists

CISTPL_CFTABLE_TPCE_FS_MEM
MEM space information exists

CISTPL_CFTABLE_TPCE_FS_MISC
MISC information exists

CISTPL_CFTABLE_TPCE_FS_STCE_EV
STCE_EV exists

CISTPL_CFTABLE_TPCE_FS_STCE_PD
STCE_PD exists

If the `CISTPL_CFTABLE_TPCE_IF` flag is set, the `ifc` field is bit-mapped and defined as follows:

CISTPL_CFTABLE_TPCE_IF_MEMORY
Memory interface

CISTPL_CFTABLE_TPCE_IF_IO_MEM
IO and memory

CISTPL_CFTABLE_TPCE_IF_CUSTOM_0
Custom interface 0

CISTPL_CFTABLE_TPCE_IF_CUSTOM_1
Custom interface 1

CISTPL_CFTABLE_TPCE_IF_CUSTOM_2
Custom interface 2

CISTPL_CFTABLE_TPCE_IF_CUSTOM_3
Custom interface 3

CISTPL_CFTABLE_TPCE_IF_MASK
Interface type mask

CISTPL_CFTABLE_TPCE_IF_BVD
BVD active in PRR

CISTPL_CFTABLE_TPCE_IF_WP
WP active in PRR

CISTPL_CFTABLE_TPCE_IF_RDY
RDY active in PRR

CISTPL_CFTABLE_TPCE_IF_MWAIT
WAIT - mem cycles

`pin` is a value for the Pin Replacement Register.

`index` is a configuration index number.

The structure members of `cistpl_cftable_entry_pd_t` are:

```
uint32_t                    flags;      /* which descriptions are valid */
cistpl_cftable_entry_pwr_t  pd_vcc;     /* VCC power description */
cistpl_cftable_entry_pwr_t  pd_vpp1;    /* Vpp1 power description */
cistpl_cftable_entry_pwr_t  pd_vpp2;    /* Vpp2 power description */
```

This `flags` field is bit-mapped and defined as follows:

CISTPL_CFTABLE_TPCE_FS_PWR_VCC
: Vcc description valid

CISTPL_CFTABLE_TPCE_FS_PWR_VPP1
: Vpp1 description valid

CISTPL_CFTABLE_TPCE_FS_PWR_VPP2
: Vpp2 description valid

The structure members of `cistpl_cftable_entry_pwr_t` are:

```
uint32_t     nomV;         /* nominal supply voltage */
uint32_t     nomV_flags;
uint32_t     minV;         /* minimum supply voltage */
uint32_t     minV_flags;
uint32_t     maxV;         /* maximum supply voltage */
uint32_t     maxV_flags;
uint32_t     staticI;      /* continuous supply current */
uint32_t     staticI_flags;
uint32_t     avgI;         /* max current required averaged over 1 sec. */
uint32_t     avgI_flags;
uint32_t     peakI;        /* max current required averaged over 10mS */
uint32_t     peakI_flags;
uint32_t     pdownI;       /* power down supply current required */
uint32_t     pdownI_flags;
```

`nomV`, `minV`, `maxV`, `staticI`, `avgI`, `peakI_flag`, and `pdownI` are defined and bit-mapped as follows:

CISTPL_CFTABLE_PD_NOMV
: Nominal supply voltage

CISTPL_CFTABLE_PD_MINV
: Minimum supply voltage

CISTPL_CFTABLE_PD_MAXV
: Maximum supply voltage

CISTPL_CFTABLE_PD_STATICI
: Continuous supply current

CISTPL_CFTABLE_PD_AVGI
: Maximum current required averaged over 1 second

CISTPL_CFTABLE_PD_PEAKI
: Maximum current required averaged over 10mS

CISTPL_CFTABLE_PD_PDOWNI
Power down supply current required

`nomV_flags`, `minV_flags`, `maxV_flags`, `staticI_flags`, `avgI_flags`, `peakI_flags`, and `pdownI_flags` are defined and bit-mapped as follows:

CISTPL_CFTABLE_PD_EXISTS
This parameter exists

CISTPL_CFTABLE_PD_MUL10
Multiply return value by 10

CISTPL_CFTABLE_PD_NC_SLEEP
No connection on sleep/power down

CISTPL_CFTABLE_PD_ZERO
Zero value required

CISTPL_CFTABLE_PD_NC
No connection ever

The structure members of `cistpl_cftable_entry_speed_t` are:

```
uint32_t    flags;       /* which timing information is present */
uint32_t    wait;        /* max WAIT time in device speed format */
uint32_t    nS_wait;     /* max WAIT time in nS */
uint32_t    rdybsy;      /* max RDY/BSY time in device speed format */
uint32_t    nS_rdybsy;   /* max RDY/BSY time in nS */
uint32_t    rsvd;        /* max RSVD time in device speed format */
uint32_t    nS_rsvd;     /* max RSVD time in nS */
```

The `flags` field is bit-mapped and defined as follows:

CISTPL_CFTABLE_TPCE_FS_TD_WAIT
WAIT timing exists

CISTPL_CFTABLE_TPCE_FS_TD_RDY
RDY/BSY timing exists

CISTPL_CFTABLE_TPCE_FS_TD_RSVD
RSVD timing exists

The structure members of `cistpl_cftable_entry_io_t` are:

```
uint32_t     flags;        /* direct copy of TPCE_IO byte in tuple */
uint32_t     addr_lines;   /* number of decoded I/O address lines */
uint32_t     ranges;       /* number of I/O ranges */
cistpl_cftable_entry_io_range_t
              range[CISTPL_CFTABLE_ENTRY_MAX_IO_RANGES];
```

The `flags` field is defined and bit-mapped as follows:

CISTPL_CFTABLE_TPCE_FS_IO_BUS
Bus width mask

CISTPL_CFTABLE_TPCE_FS_IO_BUS8
8-bit flag

CISTPL_CFTABLE_TPCE_FS_IO_BUS16
16-bit flag

CISTPL_CFTABLE_TPCE_FS_IO_RANGE
IO address ranges exist

The structure members of `cistpl_cftable_entry_io_range_t` are:

```
uint32_t     addr;     /* I/O start address */
uint32_t     length;   /* I/O register length */
```

The structure members of `cistpl_cftable_entry_irq_t` are:

```
uint32_t     flags;   /* direct copy of TPCE_IR byte in tuple */
uint32_t     irqs;    /* bit mask for each allowed IRQ */
```

The structure members of `cistpl_cftable_entry_mem_t` are:

```
uint32_t     flags;     /* memory descriptor type and host addr info */
uint32_t     windows;   /* number of memory space descriptors */
cistpl_cftable_entry_mem_window_t
         window[CISTPL_CFTABLE_ENTRY_MAX_MEM_WINDOWS];
```

The `flags` field is defined and bit-mapped as follows:

CISTPL_CFTABLE_TPCE_FS_MEM3
Space descriptors

CISTPL_CFTABLE_TPCE_FS_MEM2
`host_addr=card_addr`

CISTPL_CFTABLE_TPCE_FS_MEM1
Card address=0 any host address

CISTPL_CFTABLE_TPCE_FS_MEM_HOST
If host address is present in MEM3

The structure members of `cistpl_cftable_entry_mem_window_t` are:

```
uint32_t     length;     /* length of this window */
uint32_t     card_addr;  /* card address */
uint32_t     host_addr;  /* host address */
```

The structure members of `cistpl_cftable_entry_misc_t` are:

```
uint32_t     flags;      /* miscellaneous features flags */
```

The `flags` field is defined and bit-mapped as follows:

CISTPL_CFTABLE_TPCE_MI_MTC_MASK
Max twin cards mask

CISTPL_CFTABLE_TPCE_MI_AUDIO
Audio on BVD2

CISTPL_CFTABLE_TPCE_MI_READONLY
R/O storage

CISTPL_CFTABLE_TPCE_MI_PWRDOWN
Powerdown capable

CISTPL_CFTABLE_TPCE_MI_DRQ_MASK
DMAREQ mask

CISTPL_CFTABLE_TPCE_MI_DRQ_SPK
DMAREQ on SPKR

CISTPL_CFTABLE_TPCE_MI_DRQ_IOIS
DMAREQ on IOIS16

CISTPL_CFTABLE_TPCE_MI_DRQ_INP
DMAREQ on INPACK

CISTPL_CFTABLE_TPCE_MI_DMA_8
DMA width 8 bits

CISTPL_CFTABLE_TPCE_MI_DMA_16
DMA width 16 bits

RETURN VALUES

`CS_SUCCESS`
Successful operation.

`CS_BAD_HANDLE`
Client handle is invalid.

`CS_UNKNOWN_TUPLE`
Parser does not know how to parse tuple.

`CS_NO_CARD`
No PC Card in socket.

`CS_NO_CIS`
No Card Information Structure (CIS) on PC Card.

`CS_UNSUPPORTED_FUNCTION`
No PCMCIA hardware installed.

CONTEXT

This function may be called from user or kernel context.

SEE ALSO

`csx_GetFirstTuple`(9F), `csx_GetTupleData`(9F), `csx_Parse_CISTPL_CONFIG`(9F), `csx_RegisterClient`(9F), `csx_ValidateCIS`(9F), `tuple`(9S)

PC Card 95 Standard, PCMCIA/JEIDA

NAME

csx_Parse_CISTPL_CONFIG – parse Configuration tuple

SYNOPSIS

```
#include <sys/pccard.h>
```

```
int32_t csx_Parse_CISTPL_CONFIG(client_handle_t ch, tuple_t *tu,
    cistpl_config_t *cc);
```

INTERFACE LEVEL

Solaris DDI Specific (Solaris DDI)

PARAMETERS

ch Client handle returned from `csx_RegisterClient`(9F).

tu Pointer to a `tuple_t` structure (see `tuple`(9S)) returned by a call to `csx_GetFirstTuple`(9F) or `csx_GetNextTuple`(9F).

cc Pointer to a `cistpl_config_t` structure which contains the parsed `CISTPL_CONFIG` tuple information upon return from this function.

DESCRIPTION

This function parses the Configuration tuple, `CISTPL_CONFIG`, into a form usable by PC Card drivers. The `CISTPL_CONFIG` tuple is used to describe the general characteristics of 16-bit PC Cards containing I/O devices or using custom interfaces. It may also describe PC Cards, including Memory Only cards, which exceed nominal power supply specifications, or which need descriptions of their power requirements or other information.

STRUCTURE MEMBERS

The structure members of `cistpl_config_t` are:

```
uint32_t     present;     /* register present flags */
uint32_t     nr;          /* number of config registers found */
uint32_t     hr;          /* highest config register index found */
uint32_t     regs[CISTPL_CONFIG_MAX_CONFIG_REGS];    /* reg offsets */
uint32_t     base;        /* base offset of config registers */
uint32_t     last;        /* last config index */
```

The fields are defined as follows:

`present` This field indicates which configuration registers are present on the PC Card.

CONFIG_OPTION_REG_PRESENT
Configuration Option Register present

CONFIG_STATUS_REG_PRESENT
Configuration Status Register present

CONFIG_PINREPL_REG_PRESENT
Pin Replacement Register present

CONFIG_COPY_REG_PRESENT
Copy Register present

CONFIG_EXSTAT_REG_PRESENT
Extended Status Register present

CONFIG_IOBASE0_REG_PRESENT
IO Base 0 Register present

CONFIG_IOBASE1_REG_PRESENT
IO Base 1 Register present

CONFIG_IOBASE2_REG_PRESENT
IO Base2 Register present

CONFIG_IOBASE3_REG_PRESENT
IO Base3 Register present

CONFIG_IOLIMIT_REG_PRESENT
IO Limit Register present

`nr` This field specifies the number of configuration registers that are present on the PC Card.

`hr` This field specifies the highest configuration register number that is present on the PC Card.

`regs` This array contains the offset from the start of Attribute Memory space for each configuration register that is present on the PC Card. If a configuration register is not present on the PC Card, the value in the corresponding entry in the `regs` array is undefined.

`base` This field contains the offset from the start of Attribute Memory space to the base of the PC Card configuration register space.

`last` This field contains the value of the last valid configuration index for this PC Card.

RETURN VALUES

`CS_SUCCESS`
Successful operation.

`CS_BAD_HANDLE`
Client handle is invalid.

`CS_UNKNOWN_TUPLE`
Parser does not know how to parse tuple.

`CS_NO_CARD`
No PC Card in socket.

`CS_NO_CIS`
No Card Information Structure (CIS) on PC Card.

`CS_UNSUPPORTED_FUNCTION`
No PCMCIA hardware installed.

CONTEXT

This function may be called from user or kernel context.

SEE ALSO

`csx_GetFirstTuple`(9F), `csx_GetTupleData`(9F), `csx_Parse_CISTPL_CFTABLE_ENTRY`(9F), `csx_RegisterClient`(9F), `csx_ValidateCIS`(9F), `tuple`(9S)

PC Card 95 Standard, PCMCIA/JEIDA

NOTES

PC Card drivers should not attempt to use configurations beyond the "last" member in the `cistpl_config_t` structure.

NAME

csx_Parse_CISTPL_DATE – parse the Card Initialization Date tuple

SYNOPSIS

```
#include <sys/pccard.h>

int32_t csx_Parse_CISTPL_DATE(client_handle_t ch, tuple_t *tu,
    cistpl_date_t *cd);
```

INTERFACE LEVEL

Solaris DDI Specific (Solaris DDI)

PARAMETERS

ch Client handle returned from `csx_RegisterClient`(9F).

tu Pointer to a `tuple_t` structure (see `tuple`(9S)) returned by a call to `csx_GetFirstTuple`(9F) or `csx_GetNextTuple`(9F).

cd Pointer to a `cistpl_date_t` structure which contains the parsed `CISTPL_DATE` tuple information upon return from this function.

DESCRIPTION

This function parses the Card Initialization Date tuple, `CISTPL_DATE`, into a form usable by PC Card drivers.

The `CISTPL_DATE` tuple is an optional tuple. It indicates the date and time at which the card was formatted. Only one `CISTPL_DATE` tuple is allowed per PC Card.

STRUCTURE MEMBERS

The structure members of `cistpl_date_t` are:

```
uint32_t     time;
uint32_t     day
```

The fields are defined as follows:

`time` This field indicates the time at which the PC Card was initialized.

`day` This field indicates the date the PC Card was initialized.

RETURN VALUES

`CS_SUCCESS`	Successful operation.
`CS_BAD_HANDLE`	Client handle is invalid.
`CS_UNKNOWN_TUPLE`	Parser does not know how to parse tuple.
`CS_NO_CARD`	No PC Card in socket.
`CS_NO_CIS`	No Card Information Structure (CIS) on PC Card.
`CS_UNSUPPORTED_FUNCTION`	No PCMCIA hardware installed.

CONTEXT

This function may be called from user or kernel context.

SEE ALSO

`csx_GetFirstTuple`(9F), `csx_GetTupleData`(9F), `csx_RegisterClient`(9F), `csx_ValidateCIS`(9F), `tuple`(9S)

PC Card 95 Standard, PCMCIA/JEIDA

NAME

csx_Parse_CISTPL_DEVICE, csx_Parse_CISTPL_DEVICE_A, csx_Parse_CISTPL_DEVICE_OC, csx_Parse_CISTPL_DEVICE_OA – parse Device Information tuples

SYNOPSIS

```
#include <sys/pccard.h>
```

```
int32_t csx_Parse_CISTPL_DEVICE(client_handle_t ch, tuple_t *tu,
    cistpl_device_t *cd);
```

```
int32_t csx_Parse_CISTPL_DEVICE_A(client_handle_t ch, tuple_t *tu,
    cistpl_device_t *cd);
```

```
int32_t csx_Parse_CISTPL_DEVICE_OC(client_handle_t ch, tuple_t
    *tu, cistpl_device_t *cd);
```

```
int32_t csx_Parse_CISTPL_DEVICE_OA(client_handle_t ch, tuple_t
    *tu, cistpl_device_t *cd);
```

INTERFACE LEVEL

Solaris DDI Specific (Solaris DDI)

PARAMETERS

ch Client handle returned from `csx_RegisterClient`(9F).

tu Pointer to a `tuple_t` structure (see `tuple`(9S)) returned by a call to `csx_GetFirstTuple`(9F) or `csx_GetNextTuple`(9F).

cd Pointer to a `cistpl_device_t` structure which contains the parsed `CISTPL_DEVICE`, `CISTPL_DEVICE_A`, `CISTPL_DEVICE_OC`, or `CISTPL_DEVICE_OA` tuple information upon return from these functions, respectively.

DESCRIPTION

`csx_Parse_CISTPL_DEVICE()` and `csx_Parse_CISTPL_DEVICE_A()` parse the 5 volt Device Information tuples, `CISTPL_DEVICE` and `CISTPL_DEVICE_A`, respectively, into a form usable by PC Card drivers.

`csx_Parse_CISTPL_DEVICE_OC()` and `csx_Parse_CISTPL_DEVICE_OA()` parse the Other Condition Device Information tuples, `CISTPL_DEVICE_OC` and `CISTPL_DEVICE_OA`, respectively, into a form usable by PC Card drivers.

The `CISTPL_DEVICE` and `CISTPL_DEVICE_A` tuples are used to describe the card's device information, such as device speed, device size, device type, and address space layout information for Common Memory or Attribute Memory space, respectively.

The `CISTPL_DEVICE_OC` and `CISTPL_DEVICE_OA` tuples are used to describe the information about the card's device under a set of operating conditions for Common Memory or Attribute Memory space, respectively.

STRUCTURE MEMBERS

The structure members of `cistpl_device_t` are:

```
uint32_t              num_devices;    /* number of devices found */
cistpl_device_node_t  devnode[CISTPL_DEVICE_MAX_DEVICES];
```

The structure members of `cistpl_device_node_t` are:

```
uint32_t     flags;             /* flags specific to this device */
uint32_t     speed;             /* device speed in device
                                /*  speed code format */
uint32_t     nS_speed;          /* device speed in nS */
uint32_t     type;              /* device type */
uint32_t     size;              /* device size */
uint32_t     size_in_bytes;     /* device size in bytes */
```

The fields are defined as follows:

`flags`

This field indicates whether or not the device is writable, and describes a `Vcc` voltage at which the PC Card can be operated.

CISTPL_DEVICE_WPS
Write Protect Switch bit is set

Bits which are applicable only for `CISTPL_DEVICE_OC` and `CISTPL_DEVICE_OA` are:

CISTPL_DEVICE_OC_MWAIT
Use MWAIT

CISTPL_DEVICE_OC_Vcc_MASK
Mask for `Vcc` value

CISTPL_DEVICE_OC_Vcc5
5.0 volt operation

CISTPL_DEVICE_OC_Vcc33
3.3 volt operation

CISTPL_DEVICE_OC_VccXX
X.X volt operation

CISTPL_DEVICE_OC_VccYY
Y.Y volt operation

`speed`

The device speed value described in the device speed code unit. If this field is set to `CISTPL_DEVICE_SPEED_SIZE_IGNORE`, then the speed information will be ignored.

`nS_speed`

The device speed value described in nanosecond units.

`size`

The device size value described in the device size code unit. If this field is set to `CISTPL_DEVICE_SPEED_SIZE_IGNORE`, then the size information will be ignored.

`size_in_bytes`

The device size value described in byte units.

`type`

This is the device type code field which is defined as follows:

CISTPL_DEVICE_DTYPE_NULL
No device

CISTPL_DEVICE_DTYPE_ROM
Masked ROM

CISTPL_DEVICE_DTYPE_OTPROM
One Time Programmable ROM

CISTPL_DEVICE_DTYPE_EPROM
UV EPROM

CISTPL_DEVICE_DTYPE_EEPROM
EEPROM

CISTPL_DEVICE_DTYPE_FLASH
FLASH

CISTPL_DEVICE_DTYPE_SRAM
Static RAM

CISTPL_DEVICE_DTYPE_DRAM
Dynamic RAM

CISTPL_DEVICE_DTYPE_FUNCSPEC
Function-specific memory address range

CISTPL_DEVICE_DTYPE_EXTEND
Extended type follows

RETURN VALUES

`CS_SUCCESS`	Successful operation.
`CS_BAD_HANDLE`	Client handle is invalid.
`CS_UNKNOWN_TUPLE`	Parser does not know how to parse tuple.
`CS_NO_CARD`	No PC Card in socket.
`CS_NO_CIS`	No Card Information Structure (CIS) on PC Card.
`CS_UNSUPPORTED_FUNCTION`	No PCMCIA hardware installed.

CONTEXT

These functions may be called from user or kernel context.

SEE ALSO

`csx_GetFirstTuple`(9F), `csx_GetTupleData`(9F), `csx_Parse_CISTPL_JEDEC_C`(9F), `csx_RegisterClient`(9F), `csx_ValidateCIS`(9F), `tuple`(9S)

PC Card 95 Standard, PCMCIA/JEIDA

NAME

csx_Parse_CISTPL_DEVICEGEO – parse the Device Geo tuple

SYNOPSIS

```
#include <sys/pccard.h>
```

```
int32_t csx_Parse_CISTPL_DEVICEGEO(client_handle_t ch, tuple_t
    *tp, cistpl_devicegeo_t *pt);
```

INTERFACE LEVEL

Solaris DDI Specific (Solaris DDI)

PARAMETERS

ch Client handle returned from `csx_RegisterClient`(9F).

tp Pointer to a `tuple_t` structure (see `tuple`(9S)) returned by a call to `csx_GetFirstTuple`(9F) or `csx_GetNextTuple`(9F).

pt Pointer to a `cistpl_devicegeo_t` structure which contains the parsed Device Geo tuple information upon return from this function.

DESCRIPTION

This function parses the Device Geo tuple, `CISTPL_DEVICEGEO`, into a form usable by PC Card drivers.

The `CISTPL_DEVICEGEO` tuple describes the device geometry of common memory partitions.

STRUCTURE MEMBERS

The structure members of `cistpl_devicegeo_t` are:

```
uint32_t     info[CISTPL_DEVICEGEO_MAX_PARTITIONS].bus;
uint32_t     info[CISTPL_DEVICEGEO_MAX_PARTITIONS].ebs;
uint32_t     info[CISTPL_DEVICEGEO_MAX_PARTITIONS].rbs;
uint32_t     info[CISTPL_DEVICEGEO_MAX_PARTITIONS].wbs;
uint32_t     info[CISTPL_DEVICEGEO_MAX_PARTITIONS].part;
uint32_t     info[CISTPL_DEVICEGEO_MAX_PARTITIONS].hwil;
```

The fields are defined as follows:

`info[CISTPL_DEVICEGEO_MAX_PARTITIONS].bus`
This field indicates the card interface width in bytes for the given partition.

`info[CISTPL_DEVICEGEO_MAX_PARTITIONS].ebs`
This field indicates the minimum erase block size for the given partition.

`info[CISTPL_DEVICEGEO_MAX_PARTITIONS].rbs`
This field indicates the minimum read block size for the given partition.

`info[CISTPL_DEVICEGEO_MAX_PARTITIONS].wbs`
This field indicates the minimum write block size for the given partition.

`info[CISTPL_DEVICEGEO_MAX_PARTITIONS].part`
This field indicates the segment partition subdivisions for the given partition.

`info[CISTPL_DEVICEGEO_MAX_PARTITIONS].hwil`
This field indicates the hardware interleave

RETURN VALUES

`CS_SUCCESS`
Successful operation.

`CS_BAD_HANDLE`
Client handle is invalid.

`CS_UNKNOWN_TUPLE`
Parser does not know how to parse tuple.

`CS_NO_CARD`
No PC Card in socket.

`CS_NO_CIS`
No Card Information Structure (CIS) on PC Card.

`CS_UNSUPPORTED_FUNCTION`
No PCMCIA hardware installed.

CONTEXT

This function may be called from user or kernel context.

SEE ALSO

`csx_GetFirstTuple`(9F), `csx_GetNextTuple`(9F), `csx_GetTupleData`(9F), `csx_Parse_CISTPL_DEVICEGEO_A`(9F), `csx_RegisterClient`(9F), `tuple`(9S)

PC Card 95 Standard, PCMCIA/JEIDA

NAME

csx_Parse_CISTPL_DEVICEGEO_A – parse the Device Geo A tuple

SYNOPSIS

```
#include <sys/pccard.h>
```

```
int32_t csx_Parse_CISTPL_DEVICEGEO_A(client_handle_t ch, tuple_t
    *tp, cistpl_devicegeo_t *pt);
```

INTERFACE LEVEL

Solaris DDI Specific (Solaris DDI)

PARAMETERS

ch Client handle returned from `csx_RegisterClient`(9F).

tp Pointer to a `tuple_t` structure (see `tuple`(9S)) returned by a call to `csx_GetFirstTuple`(9F) or `csx_GetNextTuple`(9F).

pt Pointer to a `cistpl_devicegeo_t` structure which contains the parsed Device Geo A tuple information upon return from this function.

DESCRIPTION

This function parses the Device Geo A tuple, `CISTPL_DEVICEGEO_A`, into a form usable by PC Card drivers.

The `CISTPL_DEVICEGEO_A` tuple describes the device geometry of attribute memory partitions.

STRUCTURE MEMBERS

The structure members of `cistpl_devicegeo_t` are:

```
uint32_t     info[CISTPL_DEVICEGEO_MAX_PARTITIONS].bus;
uint32_t     info[CISTPL_DEVICEGEO_MAX_PARTITIONS].ebs;
uint32_t     info[CISTPL_DEVICEGEO_MAX_PARTITIONS].rbs;
uint32_t     info[CISTPL_DEVICEGEO_MAX_PARTITIONS].wbs;
uint32_t     info[CISTPL_DEVICEGEO_MAX_PARTITIONS].part;
uint32_t     info[CISTPL_DEVICEGEO_MAX_PARTITIONS].hwil;
```

The fields are defined as follows:

`info[CISTPL_DEVICEGEO_MAX_PARTITIONS].bus`
This field indicates the card interface width in bytes for the given partition.

`info[CISTPL_DEVICEGEO_MAX_PARTITIONS].ebs`
This field indicates the minimum erase block size for the given partition.

`info[CISTPL_DEVICEGEO_MAX_PARTITIONS].rbs`
This field indicates the minimum read block size for the given partition.

`info[CISTPL_DEVICEGEO_MAX_PARTITIONS].wbs`
This field indicates the minimum write block size for the given partition.

`info[CISTPL_DEVICEGEO_MAX_PARTITIONS].part`
This field indicates the segment partition subdivisions for the given partition.

`info[CISTPL_DEVICEGEO_MAX_PARTITIONS].hwil`
This field indicates the hardware interleave for the given partition.

RETURN VALUES

`CS_SUCCESS`
Successful operation.

`CS_BAD_HANDLE`
Client handle is invalid.

`CS_UNKNOWN_TUPLE`
Parser does not know how to parse tuple.

`CS_NO_CARD`
No PC Card in socket.

`CS_NO_CIS`
No Card Information Structure (CIS) on PC Card.

`CS_UNSUPPORTED_FUNCTION`
No PCMCIA hardware installed.

CONTEXT

This function may be called from user or kernel context.

SEE ALSO

`csx_GetFirstTuple`(9F), `csx_GetNextTuple`(9F), `csx_GetTupleData`(9F), `csx_Parse_CISTPL_DEVICEGEO`(9F), `csx_RegisterClient`(9F), `tuple`(9S)

PC Card 95 Standard, PCMCIA/JEIDA

NAME

csx_Parse_CISTPL_FORMAT – parse the Data Recording Format tuple

SYNOPSIS

```
#include <sys/pccard.h>

int32_t csx_Parse_CISTPL_FORMAT(client_handle_t ch, tuple_t *tu,
    cistpl_format_t *pt);
```

INTERFACE LEVEL

Solaris DDI Specific (Solaris DDI)

PARAMETERS

ch Client handle returned from `csx_RegisterClient`(9F).

tu Pointer to a `tuple_t` structure (see `tuple`(9S)) returned by a call to `csx_GetFirstTuple`(9F) or `csx_GetNextTuple`(9F).

pt Pointer to a `cistpl_format_t` structure which contains the parsed `CISTPL_FORMAT` tuple information upon return from this function.

DESCRIPTION

This function parses the Data Recording Format tuple, `CISTPL_FORMAT`, into a form usable by PC Card drivers.

The `CISTPL_FORMAT` tuple indicates the data recording format for a device partition.

STRUCTURE MEMBERS

The structure members of `cistpl_format_t` are:

```
uint32_t     type;
uint32_t     edc_length;
uint32_t     edc_type;
uint32_t     offset;
uint32_t     nbytes;
uint32_t     dev.disk.bksize;
uint32_t     dev.disk.nblocks;
uint32_t     dev.disk.edcloc;
uint32_t     dev.mem.flags;
uint32_t     dev.mem.reserved;
caddr_t      dev.mem.address;
uint32_t     dev.mem.edcloc;
```

The fields are defined as follows:

`type` This field indicates the type of device:

TPLFMTTYPE_DISK
disk-like device

TPLFMTTYPE_MEM
memory-like device

TPLFMTTYPE_VS
vendor-specific device

`edc_length` This field indicates the error detection code length.

`edc_type` This field indicates the error detection code type.

`offset` This field indicates the offset of the first byte of data in this partition.

`nbytes`	This field indicates the number of bytes of data in this partition
`dev.disk.bksize`	This field indicates the block size, for disk devices.
`dev.disk.nblocks`	This field indicates the number of blocks, for disk devices.
`dev.disk.edcloc`	This field indicates the location of the error detection code, for disk devices.
`dev.mem.flags`	This field provides flags, for memory devices. Valid flags are: TPLFMTFLAGS_ADDR address is valid TPLFMTFLAGS_AUTO automatically map memory region
`dev.mem.reserved`	This field is reserved.
`dev.mem.address`	This field indicates the physical address, for memory devices.
`dev.mem.edcloc`	This field indicates the location of the error detection code, for memory devices.

RETURN VALUES

`CS_SUCCESS`	Successful operation.
`CS_BAD_HANDLE`	Client handle is invalid.
`CS_UNKNOWN_TUPLE`	Parser does not know how to parse tuple.
`CS_NO_CARD`	No PC Card in socket.
`CS_NO_CIS`	No Card Information Structure (CIS) on PC Card.
`CS_UNSUPPORTED_FUNCTION`	No PCMCIA hardware installed.

CONTEXT

This function may be called from user or kernel context.

SEE ALSO

`csx_GetFirstTuple`(9F), `csx_GetTupleData`(9F), `csx_RegisterClient`(9F), `csx_ValidateCIS`(9F), `tuple`(9S)

PC Card 95 Standard, PCMCIA/JEIDA

NAME

csx_Parse_CISTPL_FUNCE – parse Function Extension tuple

SYNOPSIS

```
#include <sys/pccard.h>
```

```
int32_t csx_Parse_CISTPL_FUNCE(client_handle_t ch, tuple_t *tu,
     cistpl_funce_t *cf, uint32_t fid);
```

INTERFACE LEVEL

Solaris DDI Specific (Solaris DDI)

PARAMETERS

ch Client handle returned from `csx_RegisterClient`(9F).

tu Pointer to a `tuple_t` structure (see `tuple`(9S)) returned by a call to `csx_GetFirstTuple`(9F) or `csx_GetNextTuple`(9F).

cf Pointer to a `cistpl_funce_t` structure which contains the parsed `CISTPL_FUNCE` tuple information upon return from this function.

fid The function ID code to which this `CISTPL_FUNCE` tuple refers. See `csx_Parse_CISTPL_FUNCID`(9F).

DESCRIPTION

This function parses the Function Extension tuple, `CISTPL_FUNCE`, into a form usable by PC Card drivers.

The `CISTPL_FUNCE` tuple is used to describe information about a specific PC Card function. The information provided is determined by the Function Identification tuple, `CISTPL_FUNCID, that is being extended.` Each function has a defined set of extension tuples.

STRUCTURE MEMBERS

The structure members of `cistpl_funce_t` are:

```
uint32_t     function;           /* type of extended data */
uint32_t     subfunction;
union {
       struct serial {
              uint32_t  ua;      /* UART in use */
              uint32_t  uc;      /* UART capabilities */
       } serial;
       struct modem {
              uint32_t  fc;      /* supported flow control methods */
              uint32_t  cb;      /* size of DCE command buffer */
              uint32_t  eb;      /* size of DCE to DCE buffer */
              uint32_t  tb;      /* size of DTE to DCE buffer */
       } modem;
       struct data_modem {
              uint32_t  ud;      /* highest data rate */
              uint32_t  ms;      /* modulation standards */
              uint32_t  em;      /* err correct proto and
                                 /* non-CCITT modulation */
              uint32_t  dc;      /* data compression protocols */
              uint32_t  cm;      /* command protocols */
              uint32_t  ex;      /* escape mechanisms */
              uint32_t  dy;      /* standardized data encryption */
              uint32_t  ef;      /* miscellaneous end user features */
              uint32_t  ncd;     /* number of country codes */
              uchar_t   cd[16];  /* CCITT country code */
       } data_modem;
```

```
        struct fax {
                uint32_t  uf;      /* highest data rate in DTE/UART */
                uint32_t  fm;      /* CCITT modulation standards */
                uint32_t  fy;      /* standardized data encryption */
                uint32_t  fs;      /* feature selection */
                uint32_t  ncf;     /* number of country codes */
                uchar_t  cf[16];   /* CCITT country codes */
        } fax;
        struct voice {
                uint32_t  uv;      /* highest data rate */
                uint32_t  nsr;
                uint32_t  sr[16];  /* voice sampling rates (*100) */
                uint32_t  nss;
                uint32_t  ss[16];  /* voice sample sizes (*10) */
                uint32_t  nsc;
                uint32_t  sc[16];  /* voice compression methods */
        } voice;
        struct lan {
                uint32_t  tech;    /* network technology */
                uint32_t  speed;   /* media bit or baud rate */
                uint32_t  media;   /* network media supported */
                uint32_t  con;     /* open/closed connector standard */
                uint32_t  id_sz;   /* length of lan station id */uchar_t  id[16];/* station ID */
         } lan;
} data;
```

The fields are defined as follows:

function

This field identifies the type of extended information provided about a function by the `CISTPL_FUNCE` tuple. This field is defined as follows:

TPLFE_SUB_SERIAL
: Serial port interface

TPLFE_SUB_MODEM_COMMON
: Common modem interface

TPLFE_SUB_MODEM_DATA
: Data modem services

TPLFE_SUB_MODEM_FAX
: Fax modem services

TPLFE_SUB_VOICE
: Voice services

TPLFE_CAP_MODEM_DATA
: Capabilities of the data modem interface

TPLFE_CAP_MODEM_FAX
: Capabilities of the fax modem interface

TPLFE_CAP_MODEM_VOICE
: Capabilities of the voice modem interface

TPLFE_CAP_SERIAL_DATA
Serial port interface for data modem services

TPLFE_CAP_SERIAL_FAX
Serial port interface for fax modem services

TPLFE_CAP_SERIAL_VOICE
Serial port interface for voice modem services

`subfunction`
This is for identifying a sub-category of services provided by a function in the `CISTPL_FUNCE` tuple. The numeric value of the code is in the range of `1` to `15`.

`ua`
This is the serial port UART identification and is defined as follows:

TPLFE_UA_8250
Intel 8250

TPLFE_UA_16450
NS 16450

TPLFE_UA_16550
NS 16550

`uc`
This identifies the serial port UART capabilities and is defined as follows:

TPLFE_UC_PARITY_SPACE
Space parity supported

TPLFE_UC_PARITY_MARK
Mark parity supported

TPLFE_UC_PARITY_ODD
Odd parity supported

TPLFE_UC_PARITY_EVEN
Even parity supported

TPLFE_UC_CS5
5 bit characters supported

TPLFE_UC_CS6
6 bit characters supported

TPLFE_UC_CS7
7 bit characters supported

TPLFE_UC_CS8
8 bit characters supported

TPLFE_UC_STOP_1
1 stop bit supported

TPLFE_UC_STOP_15
1.5 stop bits supported

TPLFE_UC_STOP_2
2 stop bits supported

`fc` This identifies the modem flow control methods and is defined as follows:

TPLFE_FC_TX_XONOFF
Transmit XON/XOFF

TPLFE_FC_RX_XONOFF
Receiver XON/XOFF

TPLFE_FC_TX_HW
Transmit hardware flow control (CTS)

TPLFE_FC_RX_HW
Receiver hardware flow control (RTS)

TPLFE_FC_TRANS
Tranparent flow control

ms This identifies the modem modulation standards and is defined as follows:

TPLFE_MS_BELL103
300bps

TPLFE_MS_V21
300bps (V.21)

TPLFE_MS_V23
600/1200bps (V.23)

TPLFE_MS_V22AB
1200bps (V.22A V.22B)

TPLFE_MS_BELL212
2400bsp (US Bell 212

TPLFE_MS_V22BIS
2400bps (V.22bis)

TPLFE_MS_V26
2400bps leased line (V.26)

TPLFE_MS_V26BIS
2400bps (V.26bis)

TPLFE_MS_V27BIS
4800/2400bps leased line (V.27bis)

TPLFE_MS_V29
9600/7200/4800 leased line (V.29)

TPLFE_MS_V32
Up to 9600bps (V.32)

TPLFE_MS_V32BIS
Up to 14400bps (V.32bis)

TPLFE_MS_VFAST
Up to 28800 V.FAST

`em`
This identifies modem error correction/detection protocols and is defined as follows:

TPLFE_EM_MNP
MNP levels 2-4

TPLFE_EM_V42
CCITT LAPM (V.42)

`dc`
This identifies modem data compression protocols and is defined as follows:

TPLFE_DC_V42BI
CCITT compression V.42

TPLFE_DC_MNP5
MNP compression (uses MNP 2, 3 or 4)

`cm`
This identifies modem command protocols and is defined as follows:

TPLFE_CM_AT1
ANSI/EIA/TIA 602 "Action" commands

TPLFE_CM_AT2
ANSI/EIA/TIA 602 "ACE/DCE IF Params"

TPLFE_CM_AT3
ANSI/EIA/TIA 602 "Ace Parameters"

TPLFE_CM_MNP_AT
MNP specification AT commands

TPLFE_CM_V25BIS
V.25bis calling commands

TPLFE_CM_V25A
V.25bis test procedures

TPLFE_CM_DMCL
DMCL command mode

`ex`
This identifies the modem escape mechanism and is defined as follows:

TPLFE_EX_BREAK
BREAK support standardized

TPLFE_EX_PLUS
+++ returns to command mode

TPLFE_EX_UD
User defined escape character

`dy` This identifies modem standardized data encryption and is a reserved field for future use and must be set to `0`.

`ef` This identifies modem miscellaneous features and is defined as follows:

TPLFE_EF_CALLERID
Caller ID is supported

`fm` This identifies fax modulation standards and is defined as follows:

TPLFE_FM_V21C2
300bps (V.21-C2)

TPLFE_FM_V27TER
4800/2400bps (V.27ter)

TPLFE_FM_V29
9600/7200/4800 leased line (V.29)

TPLFE_FM_V17
14.4K/12K/9600/7200bps (V.17)

TPLFE_FM_V33
4.4K/12K/9600/7200 leased line (V.33)

`fs` This identifies the fax feature selection and is defined as follows:

TPLFE_FS_T3
Group 2 (T.3) service class

TPLFE_FS_T4
Group 3 (T.4) service class

TPLFE_FS_T6
Group 4 (T.6) service class

TPLFE_FS_ECM
Error Correction Mode

TPLFE_FS_VOICEREQ
Voice requests allowed

TPLFE_FS_POLLING
Polling support

TPLFE_FS_FTP
File transfer support

TPLFE_FS_PASSWORD
Password support

`tech`
This identifies the LAN technology type and is defined as follows:

TPLFE_LAN_TECH_ARCNET
Arcnet

TPLFE_LAN_TECH_ETHERNET
Ethernet

TPLFE_LAN_TECH_TOKENRING
Token Ring

TPLFE_LAN_TECH_LOCALTALK
Local Talk

TPLFE_LAN_TECH_FDDI
FDDI/CDDI

TPLFE_LAN_TECH_ATM
ATM

TPLFE_LAN_TECH_WIRELESS
Wireless

`media`
This identifies the LAN media type and is defined as follows:

TPLFE_LAN_MEDIA_INHERENT
Generic interface

TPLFE_LAN_MEDIA_UTP
Unshielded twisted pair

TPLFE_LAN_MEDIA_STP
Shielded twisted pair

TPLFE_LAN_MEDIA_THIN_COAX
Thin coax

TPLFE_LAN_MEDIA_THICK_COAX
Thick coax

TPLFE_LAN_MEDIA_FIBER
Fiber

TPLFE_LAN_MEDIA_SSR_902
Spread spectrum radio 902-928 MHz

TPLFE_LAN_MEDIA_SSR_2_4
Spread spectrum radio 2.4 GHz

TPLFE_LAN_MEDIA_SSR_5_4
Spread spectrum radio 5.4 GHz

TPLFE_LAN_MEDIA_DIFFUSE_IR
Diffuse infra red

TPLFE_LAN_MEDIA_PTP_IR
Point to point infra red

RETURN VALUES

`CS_SUCCESS`
Successful operation.

`CS_BAD_HANDLE`
Client handle is invalid.

`CS_UNKNOWN_TUPLE`
Parser does not know how to parse tuple.

`CS_NO_CARD`
No PC Card in socket.

`CS_NO_CIS`
No Card Information Structure (CIS) on PC Card.

`CS_UNSUPPORTED_FUNCTION`
No PCMCIA hardware installed.

CONTEXT

This function may be called from user or kernel context.

SEE ALSO

`csx_GetFirstTuple`(9F), `csx_GetTupleData`(9F), `csx_Parse_CISTPL_FUNCID`(9F), `csx_RegisterClient`(9F), `csx_ValidateCIS`(9F), `tuple`(9S)

PC Card 95 Standard, PCMCIA/JEIDA

NAME

csx_Parse_CISTPL_FUNCID – parse Function Identification tuple

SYNOPSIS

```
#include <sys/pccard.h>

int32_t csx_Parse_CISTPL_FUNCID(client_handle_t ch, tuple_t *tu,
     cistpl_funcid_t *cf);
```

INTERFACE LEVEL

Solaris DDI Specific (Solaris DDI)

PARAMETERS

ch Client handle returned from `csx_RegisterClient`(9F).

tu Pointer to a `tuple_t` structure (see `tuple`(9S)) returned by a call to `csx_GetFirstTuple`(9F) or `csx_GetNextTuple`(9F).

cf Pointer to a `cistpl_funcid_t` structure which contains the parsed `CISTPL_FUNCID` tuple information upon return from this function.

DESCRIPTION

This function parses the Function Identification tuple, `CISTPL_FUNCID`, into a form usable by PC Card drivers.

The `CISTPL_FUNCID` tuple is used to describe information about the functionality provided by a PC Card. Information is also provided to enable system utilities to decide if the PC Card should be configured during system initialization. If additional function specific information is available, one or more function extension tuples of type `CISTPL_FUNCE` follow this tuple (see `csx_Parse_CISTPL_FUNCE`(9F)).

STRUCTURE MEMBERS

The structure members of `cistpl_funcid_t` are:

```
uint32_t     function;     /* PC Card function code */
uint32_t     sysinit;      /* system initialization mask */
```

The fields are defined as follows:

`function` This is the function type for `CISTPL_FUNCID`:

TPLFUNC_MULTI
Vendor-specific multifunction card

TPLFUNC_MEMORY
Memory card

TPLFUNC_SERIAL
Serial I/O port

TPLFUNC_PARALLEL
Parallel printer port

TPLFUNC_FIXED
Fixed disk, silicon or removable

TPLFUNC_VIDEO
Video interface

TPLFUNC_LAN
Local Area Network adapter

TPLFUNC_AIMS
Auto Incrementing Mass Storage

TPLFUNC_SCSI
SCSI bridge

TPLFUNC_SECURITY
Security cards

TPLFUNC_VENDOR_SPECIFIC
Vendor specific

TPLFUNC_UNKNOWN
Unknown function(s)

`sysinit` This field is bit-mapped and defined as follows:

TPLINIT_POST
POST should attempt configure

TPLINIT_ROM
Map ROM during sys init

RETURN VALUES

`CS_SUCCESS`
Successful operation.

`CS_BAD_HANDLE`
Client handle is invalid.

`CS_UNKNOWN_TUPLE`
Parser does not know how to parse tuple.

`CS_NO_CARD`
No PC Card in socket.

`CS_NO_CIS`
No Card Information Structure (CIS) on PC Card.

`CS_UNSUPPORTED_FUNCTION`
No PCMCIA hardware installed.

CONTEXT

This function may be called from user or kernel context.

SEE ALSO

`csx_GetFirstTuple`(9F), `csx_GetTupleData`(9F), `csx_Parse_CISTPL_FUNCE`(9F), `csx_RegisterClient`(9F), `csx_ValidateCIS`(9F), `tuple`(9S)

PC Card 95 Standard, PCMCIA/JEIDA

NAME

csx_Parse_CISTPL_GEOMETRY – parse the Geometry tuple

SYNOPSIS

```
#include <sys/pccard.h>

int32_t csx_Parse_CISTPL_GEOMETRY(client_handle_t ch, tuple_t *tu,
    cistpl_geometry_t *pt);
```

INTERFACE LEVEL

Solaris DDI Specific (Solaris DDI)

PARAMETERS

ch Client handle returned from `csx_RegisterClient`(9F).

tu Pointer to a `tuple_t` structure (see `tuple`(9S)) returned by a call to `csx_GetFirstTuple`(9F) or `csx_GetNextTuple`(9F).

pt Pointer to a `cistpl_geometry_t` structure which contains the parsed `CISTPL_GEOMETRY` tuple information upon return from this function.

DESCRIPTION

This function parses the Geometry tuple, `CISTPL_GEOMETRY`, into a form usable by PC Card drivers.

The `CISTPL_GEOMETRY` tuple indicates the geometry of a disk-like device.

STRUCTURE MEMBERS

The structure members of `cistpl_geometry_t` are:

```
uint32_t     spt;
uint32_t     tpc;
uint32_t     ncyl;
```

The fields are defined as follows:

`spt` This field indicates the number of sectors per track.

`tpc` This field indicates the number of tracks per cylinder.

`ncyl` This field indicates the number of cylinders.

RETURN VALUES

`CS_SUCCESS`	Successful operation.
`CS_BAD_HANDLE`	Client handle is invalid.
`CS_UNKNOWN_TUPLE`	Parser does not know how to parse tuple.
`CS_NO_CARD`	No PC Card in socket.
`CS_NO_CIS`	No Card Information Structure (`CIS`) on PC Card.
`CS_UNSUPPORTED_FUNCTION`	No PCMCIA hardware installed.

CONTEXT

This function may be called from user or kernel context.

SEE ALSO

`csx_GetFirstTuple`(9F), `csx_GetTupleData`(9F), `csx_RegisterClient`(9F), `csx_ValidateCIS`(9F), `tuple`(9S)

PC Card 95 Standard, PCMCIA/JEIDA

NAME

csx_Parse_CISTPL_JEDEC_C, csx_Parse_CISTPL_JEDEC_A – parse JEDEC Identifier tuples

SYNOPSIS

```
#include <sys/pccard.h>
```

```
int32_t csx_Parse_CISTPL_JEDEC_C(client_handle_t ch, tuple_t *tu,
    cistpl_jedec_t *cj);
```

```
int32_t csx_Parse_CISTPL_JEDEC_A(client_handle_t ch, tuple_t *tu,
    cistpl_jedec_t *cj);
```

INTERFACE LEVEL

Solaris DDI Specific (Solaris DDI)

PARAMETERS

ch Client handle returned from `csx_RegisterClient`(9F).

tu Pointer to a `tuple_t` structure (see `tuple`(9S)) returned by a call to `csx_GetFirstTuple`(9F) or `csx_GetNextTuple`(9F).

cj Pointer to a `cistpl_jedec_t` structure which contains the parsed `CISTPL_JEDEC_C` or `CISTPL_JEDEC_A` tuple information upon return from these functions, respectively.

DESCRIPTION

`csx_Parse_CISTPL_JEDEC_C()` and `csx_Parse_CISTPL_JEDEC_A()` parse the JEDEC Identifier tuples, `CISTPL_JEDEC_C` and `CISTPL_JEDEC_A`, respectively, into a form usable by PC Card drivers.

The `CISTPL_JEDEC_C` and `CISTPL_JEDEC_A` tuples are optional tuples provided for cards containing programmable devices. They describe information for Common Memory or Attribute Memory space, respectively.

STRUCTURE MEMBERS

The structure members of `cistpl_jedec_t` are:

```
uint32_t        nid;   /* # of JEDEC identifiers present */
jedec_ident_t   jid[CISTPL_JEDEC_MAX_IDENTIFIERS];
```

The structure members of `jedec_ident_t` are:

```
uint32_t        id;    /* manufacturer id */
uint32_t        info;  /* manufacturer specific info */
```

RETURN VALUES

`CS_SUCCESS`	Successful operation.
`CS_BAD_HANDLE`	Client handle is invalid.
`CS_UNKNOWN_TUPLE`	Parser does not know how to parse tuple.
`CS_NO_CARD`	No PC Card in socket.
`CS_NO_CIS`	No Card Information Structure (CIS) on PC Card.
`CS_UNSUPPORTED_FUNCTION`	No PCMCIA hardware installed.

CONTEXT

These functions may be called from user or kernel context.

SEE ALSO `csx_GetFirstTuple`(9F), `csx_GetTupleData`(9F), `csx_Parse_CISTPL_DEVICE`(9F), `csx_RegisterClient`(9F), `csx_ValidateCIS`(9F), `tuple`(9S)

PC Card 95 Standard, PCMCIA/JEIDA

NAME

csx_Parse_CISTPL_LINKTARGET – parse the Link Target tuple

SYNOPSIS

```
#include <sys/pccard.h>

int32_t csx_Parse_CISTPL_LINKTARGET(client_handle_t ch, tuple_t
    *tu, cistpl_linktarget_t *pt);
```

INTERFACE LEVEL

Solaris DDI Specific (Solaris DDI)

PARAMETERS

ch Client handle returned from `csx_RegisterClient`(9F).

tu Pointer to a `tuple_t` structure (see `tuple`(9S)) returned by a call to `csx_GetFirstTuple`(9F) or `csx_GetNextTuple`(9F).

pt Pointer to a `cistpl_linktarget_t` structure which contains the parsed `CISTPL_LINKTARGET` tuple information upon return from this function.

DESCRIPTION

This function parses the Link Target tuple, `CISTPL_LINKTARGET`, into a form usable by PCCard drivers.

The `CISTPL_LINKTARGET` tuple is used to verify that tuple chains other than the primary chain are valid. All secondary tuple chains are required to contain this tuple as the first tuple of the chain.

STRUCTURE MEMBERS

The structure members of `cistpl_linktarget_t` are:

```
uint32_t   length;
char       tpltg_tag[CIS_MAX_TUPLE_DATA_LEN];
```

The fields are defined as follows:

`length` This field indicates the number of bytes in `tpltg_tag`.

`tpltg_tag` This field provides the Link Target tuple information.

RETURN VALUES

`CS_SUCCESS`	Successful operation.
`CS_BAD_HANDLE`	Client handle is invalid.
`CS_UNKNOWN_TUPLE`	Parser does not know how to parse tuple.
`CS_NO_CARD`	No PC Card in socket.
`CS_NO_CIS`	No Card Information Structure (CIS) on PC Card.
`CS_UNSUPPORTED_FUNCTION`	No PCMCIA hardware installed.

CONTEXT

This function may be called from user or kernel context.

SEE ALSO

`csx_GetFirstTuple`(9F), `csx_GetTupleData`(9F), `csx_RegisterClient`(9F), `csx_ValidateCIS`(9F), `tuple`(9S)

PC Card 95 Standard, PCMCIA/JEIDA

NAME

csx_Parse_CISTPL_LONGLINK_A, csx_Parse_CISTPL_LONGLINK_C – parse the Long Link A and C tuples

SYNOPSIS

```
#include <sys/pccard.h>

int32_t csx_Parse_CISTPL_LONGLINK_A(client_handle_t ch, tuple_t
    *tu, cistpl_longlink_ac_t *pt);

int32_t csx_Parse_CISTPL_LONGLINK_C(client_handle_t ch, tuple_t
    *tu, cistpl_longlink_ac_t *pt);
```

INTERFACE LEVEL

Solaris DDI Specific (Solaris DDI)

PARAMETERS

ch Client handle returned from `csx_RegisterClient`(9F).

tu Pointer to a `tuple_t` structure (see `tuple`(9S)) returned by a call to `csx_GetFirstTuple`(9F) or `csx_GetNextTuple`(9F).

pt Pointer to a `cistpl_longlink_ac_t` structure which contains the parsed `CISTPL_LONGLINK_A` or `CISTPL_LONGLINK_C` tuple information upon return from this function.

DESCRIPTION

This function parses the Long Link A and C tuples, `CISTPL_LONGLINK_A` and `CISTPL_LONGLINK_A`, into a form usable by PC Card drivers.

The `CISTPL_LONGLINK_A` and `CISTPL_LONGLINK_C` tuples provide links to Attribute and Common Memory.

STRUCTURE MEMBERS

The structure members of `cistpl_longlink_ac_t` are:

```
uint32_t   flags;
uint32_t   tpll_addr;
```

The fields are defined as follows:

`flags` This field indicates the type of memory:

`CISTPL_LONGLINK_AC_AM`
long link to Attribute Memory

`CISTPL_LONGLINK_AC_CM`
long link to Common Memory

`tpll_addr` This field provides the offset from the beginning of the specified address space.

RETURN VALUES

`CS_SUCCESS`	Successful operation.
`CS_BAD_HANDLE`	Client handle is invalid.
`CS_UNKNOWN_TUPLE`	Parser does not know how to parse tuple.
`CS_NO_CARD`	No PC Card in socket.
`CS_NO_CIS`	No Card Information Structure (CIS) on PC Card.

`CS_UNSUPPORTED_FUNCTION`	No PCMCIA hardware installed.

CONTEXT

This function may be called from user or kernel context.

SEE ALSO

`csx_GetFirstTuple`(9F), `csx_GetTupleData`(9F), `csx_RegisterClient`(9F), `csx_ValidateCIS`(9F), `tuple`(9S)

PC Card 95 Standard, PCMCIA/JEIDA

NAME

csx_Parse_CISTPL_LONGLINK_MFC – parse the Multi-Function tuple

SYNOPSIS

```
#include <sys/pccard.h>
```

```
int32_t csx_Parse_CISTPL_LONGLINK_MFC(client_handle_t ch, tuple_t
    *tu, cistpl_longlink_mfc_t *pt);
```

INTERFACE LEVEL

Solaris DDI Specific (Solaris DDI)

PARAMETERS

ch Client handle returned from `csx_RegisterClient`(9F).

tu Pointer to a `tuple_t` structure (see `tuple`(9S)) returned by a call to `csx_GetFirstTuple`(9F) or `csx_GetNextTuple`(9F).

pt Pointer to a `cistpl_longlink_mfc_t` structure which contains the parsed `CISTPL_LONGLINK_MFC` tuple information upon return from this function.

DESCRIPTION

This function parses the Multi-Function tuple, `CISTPL_LONGLINK_MFC`, into a form usable by PC Card drivers.

The `CISTPL_LONGLINK_MFC` tuple describes the start of the function-specific CIS for each function on a multi-function card.

STRUCTURE MEMBERS

The structure members of `cistpl_longlink_mfc_t` are:

```
uint32_t    nfuncs;
uint32_t    nregs;
uint32_t    function[CIS_MAX_FUNCTIONS].tas
uint32_t    function[CIS_MAX_FUNCTIONS].addr
```

The fields are defined as follows:

`nfuncs`
This field indicates the number of functions on the PC card.

`nregs`
This field indicates the number of configuration register sets.

`function[CIS_MAX_FUNCTIONS].tas`
This field provides the target address space for each function on the PC card. This field can be one of:

`CISTPL_LONGLINK_MFC_TAS_AM`
CIS in attribute memory

`CISTPL_LONGLINK_MFC_TAS_CM`
CIS in common memory

`function[CIS_MAX_FUNCTIONS].addr`
This field provides the target address offset for each function on the PC card.

RETURN VALUES

`CS_SUCCESS`	Successful operation.
`CS_BAD_HANDLE`	Client handle is invalid.

`CS_UNKNOWN_TUPLE`	Parser does not know how to parse tuple.
`CS_NO_CARD`	No PC Card in socket.
`CS_NO_CIS`	No Card Information Structure (CIS) on PC Card.
`CS_UNSUPPORTED_FUNCTION`	No PCMCIA hardware installed.

CONTEXT

This function may be called from user or kernel context.

SEE ALSO

`csx_GetFirstTuple`(9F), `csx_GetTupleData`(9F), `csx_RegisterClient`(9F), `csx_ValidateCIS`(9F), `tuple`(9S)

PC Card 95 Standard, PCMCIA/JEIDA

NAME

csx_Parse_CISTPL_MANFID – parse Manufacturer Identification tuple

SYNOPSIS

```
#include <sys/pccard.h>

int32_t csx_Parse_CISTPL_MANFID(client_handle_t ch, tuple_t *tu,
    cistpl_manfid_t *cm);
```

INTERFACE LEVEL

Solaris DDI Specific (Solaris DDI)

PARAMETERS

ch Client handle returned from `csx_RegisterClient`(9F).

tu Pointer to a `tuple_t` structure (see `tuple`(9S)) returned by a call to `csx_GetFirstTuple`(9F) or `csx_GetNextTuple`(9F).

cm Pointer to a `cistpl_manfid_t` structure which contains the parsed `CISTPL_MANFID` tuple information upon return from this function.

DESCRIPTION

This function parses the Manufacturer Identification tuple, `CISTPL_MANFID`, into a form usable by PC Card drivers.

The `CISTPL_MANFID` tuple is used to describe the information about the manufacturer of a PC Card. There are two types of information, the PC Card's manufacturer and a manufacturer card number.

STRUCTURE MEMBERS

The structure members of `cistpl_manfid_t` are:

```
uint32_t   manf;   /* PCMCIA assigned manufacturer code */
uint32_t   card;   /* manufacturer information
                    (part number and/or revision) */
```

RETURN VALUES

`CS_SUCCESS`	Successful operation.
`CS_BAD_HANDLE`	Client handle is invalid.
`CS_UNKNOWN_TUPLE`	Parser does not know how to parse tuple.
`CS_NO_CARD`	No PC Card in socket.
`CS_NO_CIS`	No Card Information Structure (CIS) on PC card.
`CS_UNSUPPORTED_FUNCTION`	No PCMCIA hardware installed.

CONTEXT

This function may be called from user or kernel context.

SEE ALSO

`csx_GetFirstTuple`(9F), `csx_GetTupleData`(9F), `csx_RegisterClient`(9F), `csx_ValidateCIS`(9F), `tuple`(9S)

PC Card 95 Standard, PCMCIA/JEIDA

NAME

csx_Parse_CISTPL_ORG – parse the Data Organization tuple

SYNOPSIS

```
#include <sys/pccard.h>

int32_t csx_Parse_CISTPL_ORG(client_handle_t ch, tuple_t *tu,
    cistpl_org_t *pt);
```

INTERFACE LEVEL

Solaris DDI Specific (Solaris DDI)

PARAMETERS

ch Client handle returned from `csx_RegisterClient`(9F).

tu Pointer to a `tuple_t` structure (see `tuple`(9S)) returned by a call to `csx_GetFirstTuple`(9F) or `csx_GetNextTuple`(9F).

pt Pointer to a `cistpl_org_t` structure which contains the parsed `CISTPL_ORG` tuple information upon return from this function.

DESCRIPTION

This function parses the Data Organization tuple, `CISTPL_ORG`, into a form usable by PC Card drivers.

The `CISTPL_ORG` tuple provides a text description of the organization.

STRUCTURE MEMBERS

The structure members of `cistpl_org_t` are:

```
uint32_t   type;
char       desc[CIS_MAX_TUPLE_DATA_LEN];
```

The fields are defined as follows:

`type`
This field indicates type of data organization.

`desc[CIS_MAX_TUPLE_DATA_LEN]`
This field provides the text description of this organization.

RETURN VALUES

`CS_SUCCESS`	Successful operation.
`CS_BAD_HANDLE`	Client handle is invalid.
`CS_UNKNOWN_TUPLE`	Parser does not know how to parse tuple.
`CS_NO_CARD`	No PC Card in socket.
`CS_NO_CIS`	No Card Information Structure (CIS) on PC Card.
`CS_UNSUPPORTED_FUNCTION`	No PCMCIA hardware installed.

CONTEXT

This function may be called from user or kernel context.

SEE ALSO

`csx_GetFirstTuple`(9F), `csx_GetTupleData`(9F), `csx_RegisterClient`(9F), `csx_ValidateCIS`(9F), `tuple`(9S)

PC Card 95 Standard, PCMCIA/JEIDA

NAME

csx_Parse_CISTPL_SPCL – parse the Special Purpose tuple

SYNOPSIS

```
#include <sys/pccard.h>

int32_t csx_Parse_CISTPL_SPCL(client_handle_t ch, tuple_t *tu,
    cistpl_spcl_t *csp);
```

INTERFACE LEVEL

Solaris DDI Specific (Solaris DDI)

PARAMETERS

ch Client handle returned from `csx_RegisterClient`(9F).

tu Pointer to a `tuple_t` structure (see `tuple`(9S)) returned by a call to `csx_GetFirstTuple`(9F) or `csx_GetNextTuple`(9F).

csp Pointer to a `cistpl_spcl_t` structure which contains the parsed `CISTPL_SPCL` tuple information upon return from this function.

DESCRIPTION

This function parses the Special Purpose tuple, `CISTPL_SPCL`, into a form usable by PC Card drivers.

The `CISTPL_SPCL` tuple is identified by an identification field that is assigned by PCMCIA or JEIDA. A sequence field allows a series of `CISTPL_SPCL` tuples to be used when the data exceeds the size that can be stored in a single tuple; the maximum data area of a series of `CISTPL_SPCL` tuples is unlimited. Another field gives the number of bytes in the data field in this tuple.

STRUCTURE MEMBERS

The structure members of `cistpl_date_t` are:

```
uint32_t    id;       /* tuple contents identification */
uint32_t    seq;      /* data sequence number */
uint32_t    bytes;    /* number of bytes following */
uchar_t     data[CIS_MAX_TUPLE_DATA_LEN];
```

The fields are defined as follows:

`id` This field contains a PCMCIA or JEIDA assigned value that identifies this series of one or more `CISTPL_SPCL` tuples. These field values are assigned by contacting either PCMCIA or JEIDA.

`seq` This field contains a data sequence number. `CISTPL_SPCL_SEQ_END` is the last tuple in sequence.

`bytes` This field contains the number of data bytes in the `data[CIS_MAX_TUPLE_DATA_LEN]`.

`data` The data component of this tuple.

RETURN VALUES

`CS_SUCCESS`	Successful operation.
`CS_BAD_HANDLE`	Client handle is invalid.
`CS_UNKNOWN_TUPLE`	Parser does not know how to parse tuple.
`CS_NO_CARD`	No PC Card in socket.
`CS_NO_CIS`	No Card Information Structure (CIS) on PC Card.

`CS_UNSUPPORTED_FUNCTION`	No PCMCIA hardware installed.

CONTEXT

This function may be called from user or kernel context.

SEE ALSO

`csx_GetFirstTuple`(9F), `csx_GetTupleData`(9F), `csx_RegisterClient`(9F), `csx_ValidateCIS`(9F), `tuple`(9S)

PC Card 95 Standard, PCMCIA/JEIDA

NAME

csx_Parse_CISTPL_SWIL – parse the Software Interleaving tuple

SYNOPSIS

```
#include <sys/pccard.h>

int32_t csx_Parse_CISTPL_SWIL(client_handle_t ch, tuple_t *tu,
    cistpl_swil_t *pt);
```

INTERFACE LEVEL

Solaris DDI Specific (Solaris DDI)

PARAMETERS

ch Client handle returned from `csx_RegisterClient`(9F).

tu Pointer to a `tuple_t` structure (see `tuple`(9S)) returned by a call to `csx_GetFirstTuple`(9F) or `csx_GetNextTuple`(9F).

pt Pointer to a `cistpl_swil_t` structure which contains the parsed `CISTPL_SWIL` tuple information upon return from this function.

DESCRIPTION

This function parses the Software Interleaving tuple, `CISTPL_SWIL`, into a form usable by PC Card drivers.

The `CISTPL_SWIL` tuple provides the software interleaving of data within a partition on the card.

STRUCTURE MEMBERS

The structure members of `cistpl_swil_t` are:

```
uint32_t     intrlv;
```

The fields are defined as follows:

`intrlv` This field provides the software interleaving for a partition.

RETURN VALUES

`CS_SUCCESS`	Successful operation.
`CS_BAD_HANDLE`	Client handle is invalid.
`CS_UNKNOWN_TUPLE`	Parser does not know how to parse tuple.
`CS_NO_CARD`	No PC Card in socket.
`CS_NO_CIS`	No Card Information Structure (CIS) on PC Card.
`CS_UNSUPPORTED_FUNCTION`	No PCMCIA hardware installed.

CONTEXT

This function may be called from user or kernel context.

SEE ALSO

`csx_GetFirstTuple`(9F), `csx_GetTupleData`(9F), `csx_RegisterClient`(9F), `csx_ValidateCIS`(9F), `tuple`(9S)

PC Card 95 Standard, PCMCIA/JEIDA

NAME

csx_Parse_CISTPL_VERS_1 – parse Level-1 Version/Product Information tuple

SYNOPSIS

```
#include <sys/pccard.h>
```

```
int32_t csx_Parse_CISTPL_VERS_1(client_handle_t ch, tuple_t *tu,
    cistpl_vers_1_t *cv1);
```

INTERFACE LEVEL

Solaris DDI Specific (Solaris DDI)

PARAMETERS

ch Client handle returned from `csx_RegisterClient`(9F).

tu Pointer to a `tuple_t` structure (see `tuple`(9S)) returned by a call to `csx_GetFirstTuple`(9F) or `csx_GetNextTuple`(9F).

cv1 Pointer to a `cistpl_vers_1_t` structure which contains the parsed `CISTPL_VERS_1` tuple information upon return from this function.

DESCRIPTION

This function parses the Level-1 Version/Product Information tuple, `CISTPL_VERS_1`, into a form usable by PC Card drivers.

The `CISTPL_VERS_1` tuple is used to describe the card Level-1 version compliance and card manufacturer information.

STRUCTURE MEMBERS

The structure members of `cistpl_vers_1_t` are:

```
uint32_t   major;  /* major version number */
uint32_t   minor;  /* minor version number */
uint32_t   ns;     /* number of information strings */
char       pi[CISTPL_VERS_1_MAX_PROD_STRINGS]
               [CIS_MAX_TUPLE_DATA_LEN];
                   /* pointers to product information strings */
```

RETURN VALUES

`CS_SUCCESS`	Successful operation.
`CS_BAD_HANDLE`	Client handle is invalid.
`CS_UNKNOWN_TUPLE`	Parser does not know how to parse tuple.
`CS_NO_CARD`	No PC Card in socket.
`CS_NO_CIS`	No Card Information Structure (CIS) on PC Card.
`CS_UNSUPPORTED_FUNCTION`	No PCMCIA hardware installed.

CONTEXT

This function may be called from user or kernel context.

SEE ALSO

`csx_GetFirstTuple`(9F), `csx_GetTupleData`(9F), `csx_RegisterClient`(9F), `csx_ValidateCIS`(9F), `tuple`(9S)

PC Card 95 Standard, PCMCIA/JEIDA

NAME

csx_Parse_CISTPL_VERS_2 – parse Level-2 Version and Information tuple

SYNOPSIS

```
#include <sys/pccard.h>
```

```
int32_t csx_Parse_CISTPL_VERS_2(client_handle_t ch, tuple_t *tu,
    cistpl_vers_2_t *cv2);
```

INTERFACE LEVEL

Solaris DDI Specific (Solaris DDI)

PARAMETERS

ch Client handle returned from `csx_RegisterClient`(9F).

tu Pointer to a `tuple_t` structure (see `tuple`(9S)) returned by a call to `csx_GetFirstTuple`(9F) or `csx_GetNextTuple`(9F).

cv2 Pointer to a `cistpl_vers_2_t` structure which contains the parsed `CISTPL_VERS_2` tuple information upon return from this function.

DESCRIPTION

This function parses the Level-2 Version and Information tuple, `CISTPL_VERS_2`, into a form usable by PC Card drivers.

The `CISTPL_VERS_2` tuple is used to describe the card Level-2 information which has the logical organization of the card's data.

STRUCTURE MEMBERS

The structure members of `cistpl_vers_2_t` are:

```
uint32_t   vers;     /* version number */
uint32_t   comply;   /* level of compliance */
uint32_t   dindex;   /* byte address of first data byte in card */
uint32_t   vspec8;   /* vendor specific (byte 8) */
uint32_t   vspec9;   /* vendor specific (byte 9) */
uint32_t   nhdr;     /* number of copies of CIS present on device */
char       oem[CIS_MAX_TUPLE_DATA_LEN];
                     /* Vendor of software that formatted card */
char       info[CIS_MAX_TUPLE_DATA_LEN];
                     /* Informational message about card */
```

RETURN VALUES

`CS_SUCCESS`	Successful operation.
`CS_BAD_HANDLE`	Client handle is invalid.
`CS_UNKNOWN_TUPLE`	Parser does not know how to parse tuple.
`CS_NO_CARD`	No PC Card in socket.
`CS_NO_CIS`	No Card Information Structure (CIS) on PC Card.
`CS_UNSUPPORTED_FUNCTION`	No PCMCIA hardware installed.

CONTEXT

This function may be called from user or kernel context.

SEE ALSO

`csx_GetFirstTuple`(9F), `csx_GetTupleData`(9F), `csx_RegisterClient`(9F), `csx_ValidateCIS`(9F), `tuple`(9S)

PC Card 95 Standard, PCMCIA/JEIDA

NAME

csx_ParseTuple – generic tuple parser

SYNOPSIS

```
#include <sys/pccard.h>

int32_t csx_ParseTuple(client_handle_t ch, tuple_t *tu, cisparse_t
    *cp, cisdata_t cd);
```

INTERFACE LEVEL

Solaris DDI Specific (Solaris DDI)

PARAMETERS

ch Client handle returned from `csx_RegisterClient`(9F).

tu Pointer to a `tuple_t` structure (see `tuple`(9S)) returned by a call to `csx_GetFirstTuple`(9F) or `csx_GetNextTuple`(9F).

cp Pointer to a `cisparse_t` structure that unifies all tuple parsing structures.

cd Extended tuple data for some tuples.

DESCRIPTION

This function is the generic tuple parser entry point.

STRUCTURE MEMBERS

The structure members of `cisparse_t` are:

```
typedef union cisparse_t {
   cistpl_config_t           cistpl_config;
   cistpl_device_t           cistpl_device;
   cistpl_vers_1_t           cistpl_vers_1;
   cistpl_vers_2_t           cistpl_vers_2;
   cistpl_jedec_t            cistpl_jedec;
   cistpl_format_t           cistpl_format;
   cistpl_geometry_t         cistpl_geometry;
   cistpl_byteorder_t        cistpl_byteorder;
   cistpl_date_t             cistpl_date;
   cistpl_battery_t          cistpl_battery;
   cistpl_org_t              cistpl_org;
   cistpl_manfid_t           cistpl_manfid;
   cistpl_funcid_t           cistpl_funcid;
   cistpl_funce_t            cistpl_funce;
   cistpl_cftable_entry_t    cistpl_cftable_entry;
   cistpl_linktarget_t       cistpl_linktarget;
   cistpl_longlink_ac_t      cistpl_longlink_ac;
   cistpl_longlink_mfc_t     cistpl_longlink_mfc;
   cistpl_spcl_t             cistpl_spcl;
   cistpl_swil_t             cistpl_swil;
   cistpl_bar_t              cistpl_bar;
   cistpl_devicegeo_t        cistpl_devicegeo;
   cistpl_longlink_cb_t      cistpl_longlink_cb;
   cistpl_get_tuple_name_t   cistpl_get_tuple_name;
} cisparse_t;
```

RETURN VALUES

`CS_SUCCESS`	Successful operation.
`CS_BAD_HANDLE`	Client handle is invalid.
`CS_UNKNOWN_TUPLE`	Parser does not know how to parse tuple.
`CS_NO_CARD`	No PC Card in socket.
`CS_BAD_CIS`	Generic parser error.

`CS_NO_CIS`	No Card Information Structure (CIS) on PC Card.
`CS_UNSUPPORTED_FUNCTION`	No PCMCIA hardware installed.

CONTEXT

This function may be called from user or kernel context.

SEE ALSO

`csx_GetFirstTuple`(9F), `csx_GetTupleData`(9F), `csx_Parse_CISTPL_BATTERY`(9F), `csx_Parse_CISTPL_BYTEORDER`(9F), `csx_Parse_CISTPL_CFTABLE_ENTRY`(9F), `csx_Parse_CISTPL_CONFIG`(9F), `csx_Parse_CISTPL_DATE`(9F), `csx_Parse_CISTPL_DEVICE`(9F), `csx_Parse_CISTPL_FUNCE`(9F), `csx_Parse_CISTPL_FUNCID`(9F), `csx_Parse_CISTPL_JEDEC_C`(9F), `csx_Parse_CISTPL_MANFID`(9F), `csx_Parse_CISTPL_SPCL`(9F), `csx_Parse_CISTPL_VERS_1`(9F), `csx_Parse_CISTPL_VERS_2`(9F), `csx_RegisterClient`(9F), `csx_ValidateCIS`(9F), `tuple`(9S)

PC Card 95 Standard, PCMCIA/JEIDA

NAME

csx_Put8, csx_Put16, csx_Put32, csx_Put64 – write to device register

SYNOPSIS

```
#include <sys/pccard.h>

void csx_Put8(acc_handle_t handle, uint32_t offset, uint8_t value);

void csx_Put16(acc_handle_t handle, uint32_t offset, uint16_t value);

void csx_Put32(acc_handle_t handle, uint32_t offset, uint32_t value);

void csx_Put64(acc_handle_t handle, uint32_t offset, uint64_t value);
```

INTERFACE LEVEL

Solaris DDI Specific (Solaris DDI)

PARAMETERS

handle The access handle returned from `csx_RequestIO`(9F), `csx_RequestWindow`(9F), or `csx_DupHandle`(9F).

offset The offset in bytes from the base of the mapped resource.

value The data to be written to the device.

DESCRIPTION

These functions generate a write of various sizes to the mapped memory or device register.

The `csx_Put8()`, `csx_Put16()`, `csx_Put32()`, and `csx_Put64()` functions write 8 bits, 16 bits, 32 bits, and 64 bits of data, respectively, to the device address represented by the handle, *handle*, at an offset in bytes represented by the offset, *offset*.

Data that consists of more than one byte will automatically be translated to maintain a consistent view between the host and the device based on the encoded information in the data access handle. The translation may involve byte swapping if the host and the device have incompatible endian characteristics.

CONTEXT

These functions may be called from user, kernel, or interrupt context.

SEE ALSO

`csx_DupHandle`(9F), `csx_Get8`(9F), `csx_GetMappedAddr`(9F), `csx_RepGet8`(9F), `csx_RepPut8`(9F), `csx_RequestIO`(9F), `csx_RequestWindow`(9F)

PC Card 95 Standard, PCMCIA/JEIDA

NAME

csx_RegisterClient – register a client

SYNOPSIS

```
#include <sys/pccard.h>
```

```
int32_t csx_RegisterClient(client_handle_t *ch, client_reg_t *cr);
```

INTERFACE LEVEL

Solaris DDI Specific (Solaris DDI)

PARAMETERS

ch Pointer to a `client_handle_t` structure.

mc Pointer to a `client_reg_t` structure.

DESCRIPTION

This function registers a client with Card Services and returns a unique client handle for the client. The client handle must be passed to `csx_DeregisterClient`(9F) when the client terminates.

STRUCTURE MEMBERS

The structure members of `client_reg_t` are:

```
uint32_t                Attributes;
uint32_t                EventMask;
event_callback_args_t   event_callback_args;
uint32_t                Version;              /* CS version to expect */
csfunction_t            *event_handler;
ddi_iblock_cookie_t     *iblk_cookie;         /* event iblk cookie */
ddi_idevice_cookie_t    *idev_cookie;         /* event idev cookie */
dev_info_t              *dip;                 /* client's dip */
char                    driver_name[MODMAXNAMELEN];
```

The fields are defined as follows:

`Attributes`

This field is bit-mapped and defined as follows:

`INFO_MEM_CLIENT`
Memory client device driver.

`INFO_MTD_CLIENT`
Memory Technology Driver client.

`INFO_IO_CLIENT`
IO client device driver.

`INFO_CARD_SHARE`
Generate artificial `CS_EVENT_CARD_INSERTION` and `CS_EVENT_REGISTRATION_COMPLETE` events.

`INFO_CARD_EXCL`
Generate artificial `CS_EVENT_CARD_INSERTION` and `CS_EVENT_REGISTRATION_COMPLETE` events.

`INFO_MEM_CLIENT`
`INFO_MTD_CLIENT`
`INFO_IO_CLIENT`
These bits are mutually exclusive (that is, only one bit may be set), but one of the bits must be set.

INFO_CARD_SHARE
INFO_CARD_EXCL
If either of these bits is set, the client will receive a CS_EVENT_REGISTRATION_COMPLETE event when Card Services has completed its internal client registration processing and after a sucessful call to csx_RequestSocketMask(9F).

Also, if either of these bits is set, and if a card of the type that the client can control is currently inserted in the socket (and after a successful call to csx_RequestSocketMask(9F)), the client will receive an artificial CS_EVENT_CARD_INSERTION event.

Event Mask
This field is bit-mapped and specifies the client's global event mask. Card Services performs event notification based on this field. See csx_event_handler(9E) for valid event definitions and for additional information about handling events.

event_callback_args
The event_callback_args_t structure members are:

```
void     *client_data;
```

The client_data field may be used to provide data available to the event handler (see csx_event_handler(9E)). Typically, this is the client driver's soft state pointer.

Version
This field contains the specific Card Services version number that the client expects to use. Typically, the client will use the CS_VERSION macro to specify to Card Services which version of Card Services the client expects.

event_handler
The client event callback handler entry point is passed in the event_handler field.

iblk_cookie
idev_cookie
These fields must be used by the client to set up mutexes that are used in the client's event callback handler when handling high priority events.

dip
The client must set this field with a pointer to the client's dip.

driver_name
The client must copy a driver-unique name into this member. This name must be identical across all instances of the driver.

RETURN VALUES

CS_SUCCESS
Successful operation.

CS_BAD_ATTRIBUTE
No client type or more than one client type specified.

`CS_OUT_OF_RESOURCE`
Card Services is unable to register client.

`CS_BAD_VERSION`
Card Services version is incompatable with client.

`CS_BAD_HANDLE`
Client has already registered for this socket.

`CS_UNSUPPORTED_FUNCTION`
No PCMCIA hardware installed.

CONTEXT

This function may be called from user or kernel context.

SEE ALSO

`csx_DeregisterClient`(9F), `csx_RequestSocketMask`(9F)

PC Card 95 Standard, PCMCIA/JEIDA

NAME

csx_ReleaseConfiguration – release PC Card and socket configuration

SYNOPSIS

```
#include <sys/pccard.h>

int32_t csx_ReleaseConfiguration(client_handle_t ch,
    release_config_t *rc);
```

INTERFACE LEVEL

Solaris DDI Specific (Solaris DDI)

PARAMETERS

ch Client handle returned from `csx_RegisterClient`(9F).

rc Pointer to a `release_config_t` structure.

DESCRIPTION

This function returns a PC Card and socket to a simple memory only interface and sets the card to configuration zero by writing a `0` to the PC card's COR (Configuration Option Register).

Card Services may remove power from the socket if no clients have indicated their usage of the socket by an active `csx_RequestConfiguration`(9F) or `csx_RequestWindow`(9F).

Card Services is prohibited from resetting the PC Card and is not required to cycle power through zero (`0`) volts.

After calling `csx_ReleaseConfiguration()` any resources requested via the request functions `csx_RequestIO`(9F), `csx_RequestIRQ`(9F), or `csx_RequestWindow`(9F) that are no longer needed should be returned to Card Services via the corresponding `csx_ReleaseIO`(9F), `csx_ReleaseIRQ`(9F), or `csx_ReleaseWindow`(9F) functions. `csx_ReleaseConfiguration()` must be called to release the current card and socket configuration before releasing any resources requested by the driver via the request functions named above.

STRUCTURE MEMBERS

The structure members of `release_config_t` are:

```
uint32_t     Socket;     /* socket number */
```

The `Socket` field is not used in Solaris, but for portability with other Card Services implementations, it should be set to the logical socket number.

RETURN VALUES

`CS_SUCCESS`
Successful operation.

`CS_BAD_HANDLE`
Client handle is invalid or `csx_RequestConfiguration`(9F) not done.

`CS_BAD_SOCKET`
Error getting or setting socket hardware parameters.

`CS_NO_CARD`
No PC card in socket.

`CS_UNSUPPORTED_FUNCTION`
No PCMCIA hardware installed.

CONTEXT

This function may be called from user or kernel context.

SEE ALSO

`csx_RegisterClient`(9F), `csx_RequestConfiguration`(9F), `csx_RequestIO`(9F), `csx_RequestIRQ`(9F), `csx_RequestWindow`(9F)

PC Card 95 Standard, PCMCIA/JEIDA

NAME

csx_RepGet8, csx_RepGet16, csx_RepGet32, csx_RepGet64 – read repetitively from the device register

SYNOPSIS

```
#include <sys/pccard.h>

void csx_RepGet8(acc_handle_t handle, uint8_t *hostaddr, uint32_t
     offset, uint32_t repcount, uint32_t flags);

void csx_RepGet16(acc_handle_t handle, uint16_t *hostaddr, uint32_t
     offset, uint32_t repcount, uint32_t flags);

void csx_RepGet32(acc_handle_t handle, uint32_t *hostaddr, uint32_t
     offset, uint32_t repcount, uint32_t flags);

void csx_RepGet64(acc_handle_t handle, uint64_t *hostaddr, uint32_t
     offset, uint32_t repcount, uint32_t flags);
```

INTERFACE LEVEL

Solaris DDI Specific (Solaris DDI)

PARAMETERS

handle	The access handle returned from `csx_RequestIO`(9F), `csx_RequestWindow`(9F), or `csx_DupHandle`(9F).
hostaddr	Source host address.
offset	The offset in bytes from the base of the mapped resource.
repcount	Number of data accesses to perform.
flags	Device address flags.

DESCRIPTION

These functions generate multiple reads of various sizes from the mapped memory or device register.

The `csx_RepGet8()`, `csx_RepGet16()`, `csx_RepGet32()`, and `csx_RepGet64()` functions generate *repcount* reads of 8 bits, 16 bits, 32 bits, and 64 bits of data, respectively, from the device address represented by the handle, *handle*, at an offset in bytes represented by the offset, *offset*. The data read is stored consecutively into the buffer pointed to by the host address pointer, *hostaddr*.

Data that consists of more than one byte will automatically be translated to maintain a consistent view between the host and the device based on the encoded information in the data access handle. The translation may involve byte swapping if the host and the device have incompatible endian characteristics.

When the *flags* argument is set to `CS_DEV_AUTOINCR`, these functions increment the device offset, *offset*, after each datum read operation. However, when the *flags* argument is set to `CS_DEV_NO_AUTOINCR`, the same device offset will be used for every datum access. For example, this flag may be useful when reading from a data register.

CONTEXT

These functions may be called from user, kernel, or interrupt context.

SEE ALSO `csx_DupHandle`(9F), `csx_Get8`(9F), `csx_GetMappedAddr`(9F), `csx_Put8`(9F), `csx_RepPut8`(9F), `csx_RequestIO`(9F), `csx_RequestWindow`(9F)

PC Card 95 Standard, PCMCIA/JEIDA

NAME

csx_RepPut8, csx_RepPut16, csx_RepPut32, csx_RepPut64 – write repetitively to the device register

SYNOPSIS

```
#include <sys/pccard.h>

void csx_RepPut8(acc_handle_t handle, uint8_t *hostaddr, uint32_t
     offset, uint32_t repcount, uint32_t flags);

void csx_RepPut16(acc_handle_t handle, uint16_t *hostaddr, uint32_t
     offset, uint32_t repcount, uint32_t flags);

void csx_RepPut32(acc_handle_t handle, uint32_t *hostaddr, uint32_t
     offset, uint32_t repcount, uint32_t flags);

void csx_RepPut64(acc_handle_t handle, uint64_t *hostaddr, uint32_t
     offset, uint32_t repcount, uint32_t flags);
```

INTERFACE LEVEL

Solaris DDI Specific (Solaris DDI)

PARAMETERS

handle	The access handle returned from `csx_RequestIO`(9F), `csx_RequestWindow`(9F), or `csx_DupHandle`(9F).
hostaddr	Source host address.
offset	The offset in bytes from the base of the mapped resource.
repcount	Number of data accesses to perform.
flags	Device address flags.

DESCRIPTION

These functions generate multiple writes of various sizes to the mapped memory or device register.

The `csx_RepPut8()`, `csx_RepPut16()`, `csx_RepPut32()`, and `csx_RepPut64()` functions generate *repcount* writes of 8 bits, 16 bits, 32 bits, and 64 bits of data, respectively, to the device address represented by the handle, *handle*, at an offset in bytes represented by the offset, *offset*. The data written is read consecutively from the buffer pointed to by the host address pointer, *hostaddr*.

Data that consists of more than one byte will automatically be translated to maintain a consistent view between the host and the device based on the encoded information in the data access handle. The translation may involve byte swapping if the host and the device have incompatible endian characteristics.

When the *flags* argument is set to `CS_DEV_AUTOINCR`, these functions increment the device offset, *offset*, after each datum write operation. However, when the *flags* argument is set to `CS_DEV_NO_AUTOINCR`, the same device offset will be used for every datum access. For example, this flag may be useful when writing to a data register.

CONTEXT

These functions may be called from user, kernel, or interrupt context.

SEE ALSO `csx_DupHandle`(9F), `csx_Get8`(9F), `csx_GetMappedAddr`(9F), `csx_Put8`(9F), `csx_RepGet8`(9F), `csx_RequestIO`(9F), `csx_RequestWindow`(9F)

PC Card 95 Standard, PCMCIA/JEIDA

NAME

csx_RequestConfiguration – configure the PC Card and socket

SYNOPSIS

```
#include <sys/pccard.h>

int32_t csx_RequestConfiguration(client_handle_t ch, config_req_t
    *cr);
```

INTERFACE LEVEL

Solaris DDI Specific (Solaris DDI)

PARAMETERS

ch Client handle returned from `csx_RegisterClient`(9F).

cr Pointer to a `config_req_t` structure.

DESCRIPTION

This function configures the PC Card and socket. It must be used by clients that require I/O or IRQ resources for their PC Card.

`csx_RequestIO`(9F) and `csx_RequestIRQ`(9F) must be used before calling this function to specify the I/O and IRQ requirements for the PC Card and socket if necessary. `csx_RequestConfiguration()` establishes the configuration in the socket adapter and PC Card, and it programs the Base and Limit registers of multi-function PC Cards if these registers exist. The values programmed into these registers depend on the IO requirements of this configuration.

STRUCTURE MEMBERS

The structure members of `config_req_t` are:

```
uint32_t     Socket;          /* socket number */
uint32_t     Attributes;      /* configuration attributes */
uint32_t     Vcc;             /* Vcc value */
uint32_t     Vpp1;            /* Vpp1 value */
uint32_t     Vpp2;            /* Vpp2 value */
uint32_t     IntType;         /* socket interface type - mem or IO */
uint32_t     ConfigBase;      /* offset from start of AM space */
uint32_t     Status;          /* value to write to STATUS register */
uint32_t     Pin;             /* value to write to PRR */
uint32_t     Copy;            /* value to write to COPY register */
uint32_t     ConfigIndex;     /* value to write to COR */
uint32_t     Present;         /* which config registers present */
uint32_t     ExtendedStatus;  /* value to write to EXSTAT register */
```

The fields are defined as follows:

`Socket`
Not used in Solaris, but for portability with other Card Services implementations, it should be set to the logical socket number.

`Attributes`
This field is bit-mapped. It indicates whether the client wishes the IRQ resources to be enabled and whether Card Services should ignore the VS bits on the socket interface. The following bits are defined:

`CONF_ENABLE_IRQ_STEERING`
Enable IRQ Steering. Set to connect the PC Card IREQ line to a system interrupt previously selected by a call to `csx_RequestIRQ`(9F). If `CONF_ENABLE_IRQ_STEERING` is set, once `csx_RequestConfiguration()`

has successfully returned, the client may start receiving IRQ callbacks at the IRQ callback handler established in the call to `csx_RequestIRQ`(9F).

`CONF_VSOVERRIDE`
Override VS pins. After card insertion and prior to the first successful `csx_RequestConfiguration()`, the voltage levels applied to the card shall be those indicated by the card's physical key and/or the VS[2:1] voltage sense pins. For Low Voltage capable host systems (hosts which are capable of VS pin decoding), if a client desires to apply a voltage not indicated by the VS pin decoding, then `CONF_VSOVERRIDE` must be set in the `Attributes` field; otherwise, `CS_BAD_VCC` shall be returned.

`Vcc, Vpp1, Vpp2`
These fields all represent voltages expressed in tenths of a volt. Values from zero (`0`) to `25.5` volts may be set. To be valid, the exact voltage must be available from the system. PC Cards indicate multiple `Vcc` voltage capability in their CIS via the `CISTPL_CFTABLE_ENTRY` tuple. After card insertion, Card Services processes the CIS, and when multiple `Vcc` voltage capability is indicated, Card Services will allow the client to apply `Vcc` voltage levels which are contrary to the VS pin decoding without requiring the client to set `CONF_VSOVERRIDE`.

`IntType`
This field is bit-mapped. It indicates how the socket should be configured. The following bits are defined:

`SOCKET_INTERFACE_MEMORY`
Memory only interface.

`SOCKET_INTERFACE_MEMORY_AND_IO`
Memory and I/O interface.

`ConfigBase`
This field is the offset in bytes from the beginning of attribute memory of the configuration registers.

`Present`
This field identifies which of the configuration registers are present. If present, the corresponding bit is set. This field is bit-mapped as follows:

`CONFIG_OPTION_REG_PRESENT`
Configuration Option Register (COR) present

`CONFIG_STATUS_REG_PRESENT`
Configuration Status Register (CCSR) present

`CONFIG_PINREPL_REG_PRESENT`
Pin Replacement Register (PRR) present

`CONFIG_COPY_REG_PRESENT`
Socket and Copy Register (SCR) present

`CONFIG_ESR_REG_PRESENT`
Extended Status Register (ESR) present

`Status, Pin, Copy, ExtendedStatus`
These fields represent the initial values that should be written to those registers if they are present, as indicated by the `Present` field.

The `Pin` field is also used to inform Card Services which pins in the PC Card's PRR (Pin Replacement Register) are valid. Only those bits which are set are considered valid. This affects how status is returned by the `csx_GetStatus`(9F) function. If a particular signal is valid in the PRR, both the *mask* (`STATUS`) bit and the *change* (`EVENT`) bit must be set in the `Pin` field. The following PRR bit definitions are provided for client use:

`PRR_WP_STATUS`	`WRITE PROTECT` mask
`PRR_READY_STATUS`	`READY` mask
`PRR_BVD2_STATUS`	`BVD2` mask
`PRR_BVD1_STATUS`	`BVD1` mask
`PRR_WP_EVENT`	`WRITE PROTECT` changed
`PRR_READY_EVENT`	`READY` changed
`PRR_BVD2_EVENT`	`BVD2` changed
`PRR_BVD1_EVENT`	`BVD1` changed

`ConfigIndex`
This field is the value written to the COR (Configuration Option Register) for the configuration index required by the PC Card. Only the least significant six bits of the `ConfigIndex` field are significant; the upper two (2) bits are ignored. The interrupt type in the COR is always set to *level* mode by Card Services.

RETURN VALUES

`CS_SUCCESS`
Successful operation.

`CS_BAD_HANDLE`
Client handle is invalid or `csx_RequestConfiguration()` not done.

`CS_BAD_SOCKET`
Error in getting or setting socket hardware parameters.

`CS_BAD_VCC`
Requested `Vcc` is not available on socket.

`CS_BAD_VPP`
Requested `Vpp` is not available on socket.

`CS_NO_CARD`
No PC Card in socket.

`CS_BAD_TYPE`
I/O and memory interface not supported on socket.

`CS_CONFIGURATION_LOCKED`
`csx_RequestConfiguration()` already done.

`CS_UNSUPPORTED_FUNCTION`
No PCMCIA hardware installed.

CONTEXT

This function may be called from user or kernel context.

SEE ALSO

`csx_AccessConfigurationRegister`(9F), `csx_GetStatus`(9F), `csx_RegisterClient`(9F), `csx_ReleaseConfiguration`(9F), `csx_RequestIO`(9F), `csx_RequestIRQ`(9F)

PC Card 95 Standard, PCMCIA/JEIDA

NAME

csx_RequestIO, csx_ReleaseIO – request or release I/O resources for the client

SYNOPSIS

```
#include <sys/pccard.h>

int32_t csx_RequestIO(client_handle_t ch, io_req_t *ir);

int32_t csx_ReleaseIO(client_handle_t ch, io_req_t *ir);
```

INTERFACE LEVEL

Solaris DDI Specific (Solaris DDI)

PARAMETERS

ch Client handle returned from `csx_RegisterClient`(9F).

ir Pointer to an `io_req_t` structure.

DESCRIPTION

The functions `csx_RequestIO()` and `csx_ReleaseIO()` request or release, respectively, I/O resources for the client.

If a client requires I/O resources, `csx_RequestIO()` must be called to request I/O resources from Card Services; then `csx_RequestConfiguration`(9F) must be used to establish the configuration. `csx_RequestIO()` can be called multiple times until a successful set of I/O resources is found. `csx_RequestConfiguration`(9F) only uses the last configuration specified.

`csx_RequestIO()` fails if it has already been called without a corresponding `csx_ReleaseIO()`.

`csx_ReleaseIO()` releases previously requested I/O resources. The Card Services window resource list is adjusted by this function. Depending on the adapter hardware, the I/O window might also be disabled.

STRUCTURE MEMBERS

The structure members of `io_req_t` are:

```
uint32_t       Socket;            /* socket number*/

uint32_t       Baseport1.base;    /* IO range base port address */
acc_handle_t   Baseport1.handle;  /* IO range base address
                                  /*   or port num */
uint32_t       NumPorts1;         /* first IO range number contiguous
                                  /*   ports */
uint32_t       Attributes1;       /* first IO range attributes */

uint32_t       Baseport2.base;    /* IO range base port address */
acc_handle_t   Baseport2.handle;  /* IO range base address or port num */
uint32_t       NumPorts2;         /* second IO range number contiguous
                                  /*   ports */
uint32_t       Attributes2;       /* second IO range attributes */

uint32_t       IOAddrLines;       /* number of IO address lines decoded */
```

The fields are defined as follows:

`Socket`
Not used in Solaris, but for portability with other Card Services implementations, it should be set to the logical socket number.

`BasePort1.base`
`BasePort1.handle`
`BasePort2.base`
`BasePort2.handle`

Two I/O address ranges can be requested by `csx_RequestIO()`. Each I/O address range is specified by the `BasePort`, `NumPorts`, and `Attributes` fields. If only a single I/O range is being requested, the `NumPorts2` field must be reset to `0`.

When calling `csx_RequestIO()`, the `BasePort.base` field specifies the first port address requested. Upon successful return from `csx_RequestIO()`, the `BasePort.handle` field contains an access handle, corresponding to the first byte of the allocated I/O window, which the client must use when accessing the PC Card's I/O space via the common access functions. A client *must not* make any assumptions as to the format of the returned `BasePort.handle` field value.

If the `BasePort.base` field is set to `0`, Card Services returns an I/O resource based on the available I/O resources and the number of contiguous ports requested. When `BasePort.base` is `0`, Card Services aligns the returned resource in the host system's I/O address space on a boundary that is a multiple of the number of contiguous ports requested, rounded up to the nearest power of two. For example, if a client requests two I/O ports, the resource returned will be a multiple of two. If a client requests five contiguous I/O ports, the resource returned will be a multiple of eight.

If multiple ranges are being requested, at least one of the `BasePort.base` fields must be non-zero.

`NumPorts`

This field is the number of contiguous ports being requested.

`Attributes`

This field is bit-mapped. The following bits are defined:

`IO_DATA_WIDTH_8`
I/O resource uses 8-bit data path.

`IO_DATA_WIDTH_16`
I/O resource uses 16-bit data path.

`WIN_ACC_NEVER_SWAP`
Host endian byte ordering.

`WIN_ACC_BIG_ENDIAN`
Big endian byte ordering

`WIN_ACC_LITTLE_ENDIAN`
Little endian byte ordering.

`WIN_ACC_STRICT_ORDER`
Program ordering references.

`WIN_ACC_UNORDERED_OK`
May re-order references.

WIN_ACC_MERGING_OK
Merge stores to consecutive locations.

WIN_ACC_LOADCACHING_OK
May cache load operations.

WIN_ACC_STORECACHING_OK
May cache store operations.

For some combinations of host system busses and adapter hardware, the width of an I/O resource can not be set via RequestIO(); on those systems, the host bus cycle access type determines the I/O resource data path width on a per-cycle basis.

WIN_ACC_BIG_ENDIAN and WIN_ACC_LITTLE ENDIAN describe the endian characteristics of the device as big endian or little endian, respectively. Even though most of the devices will have the same endian characteristics as their busses, there are examples of devices with an I/O processor that has opposite endian characteristics of the busses. When WIN_ACC_BIG_ENDIAN or WIN_ACC_LITTLE ENDIAN is set, byte swapping will automatically be performed by the system if the host machine and the device data formats have opposite endian characteristics. The implementation may take advantage of hardware platform byte swapping capabilities.

When WIN_ACC_NEVER_SWAP is specified, byte swapping will not be invoked in the data access functions. The ability to specify the order in which the CPU will reference data is provided by the following Attributes bits. Only one of the following bits may be specified:

WIN_ACC_STRICT_ORDER
The data references must be issued by a CPU in program order. Strict ordering is the default behavior.

WIN_ACC_UNORDERED_OK
The CPU may re-order the data references. This includes all kinds of re-ordering (that is, a load followed by a store may be replaced by a store followed by a load).

WIN_ACC_MERGING_OK
The CPU may merge individual stores to consecutive locations. For example, the CPU may turn two consecutive byte stores into one halfword store. It may also batch individual loads. For example, the CPU may turn two consecutive byte loads into one halfword load. IO_MERGING_OK_ACC also implies re-ordering.

WIN_ACC_LOADCACHING_OK
The CPU may cache the data it fetches and reuse it until another store occurs. The default behavior is to fetch new data on every load. WIN_ACC_LOADCACHING_OK also implies merging and re-ordering.

WIN_ACC_STORECACHING_OK
The CPU may keep the data in the cache and push it to the device (perhaps with other data) at a later time. The default behavior is to push the data right away. WIN_ACC_STORECACHING_OK also implies load caching, merging, and

re-ordering.

These values are advisory, not mandatory. For example, data can be ordered without being merged or cached, even though a driver requests unordered, merged and cached together. All other bits in the `Attributes` field must be set to `0`.

`IOAddrLines`
This field is the number of I/O address lines decoded by the PC Card in the specified socket.

On some systems, multiple calls to `csx_RequestIO()` with different `BasePort`, `NumPorts`, and/or `IOAddrLines` values will have to be made to find an acceptable combination of parameters that can be used by Card Services to allocate I/O resources for the client. (See `NOTES`).

RETURN VALUES

`CS_SUCCESS`
Successful operation.

`CS_BAD_ATTRIBUTE`
Invalid `Attributes` specified.

`CS_BAD_BASE`
`BasePort` value is invalid.

`CS_BAD_HANDLE`
Client handle is invalid.

`CS_CONFIGURATION_LOCKED`
`csx_RequestConfiguration`(9F) has already been done.

`CS_IN_USE`
`csx_RequestIO()` has already been done without a corresponding `csx_ReleaseIO()`.

`CS_NO_CARD`
No PC Card in socket.

`CS_BAD_WINDOW`
Unable to allocate I/O resources.

`CS_OUT_OF_RESOURCE`
Unable to allocate I/O resources.

`CS_UNSUPPORTED_FUNCTION`
No PCMCIA hardware installed.

CONTEXT

These functions may be called from user or kernel context.

SEE ALSO

`csx_RegisterClient`(9F), `csx_RequestConfiguration`(9F)

PC Card 95 Standard, PCMCIA/JEIDA

NOTES

It is important for clients to try to use the minimum amount of I/O resources necessary. One way to do this is for the client to parse the CIS of the PC Card and call `csx_RequestIO()` first with any `IOAddrLines` values that are `0` or that specify a minimum number of address lines necessary to decode the I/O space on the PC Card. Also, if no convenient minimum number of address lines can be used to decode the I/O space on the PC Card, it is important to try to avoid system conflicts with well-known architectural hardware features.

NAME

csx_RequestIRQ, csx_ReleaseIRQ – request or release IRQ resource

SYNOPSIS

```
#include <sys/pccard.h>

int32_t csx_RequestIRQ(client_handle_t ch, irq_req_t *ir);

int32_t csx_ReleaseIRQ(client_handle_t ch, irq_req_t *ir);
```

INTERFACE LEVEL

Solaris DDI Specific (Solaris DDI)

PARAMETERS

ch Client handle returned from `csx_RegisterClient`(9F).

ir Pointer to an `irq_req_t` structure.

DESCRIPTION

The function `csx_RequestIRQ()` requests an IRQ resource and registers the client's IRQ handler with Card Services.

If a client requires an IRQ,`csx_RequestIRQ()` must be called to request an IRQ resource as well as to register the client's IRQ handler with Card Services. The client will not receive callbacks at the IRQ callback handler until `csx_RequestConfiguration`(9F) or `csx_ModifyConfiguration`(9F) has successfully returned when either of these functions are called with the `CONF_ENABLE_IRQ_STEERING` bit set.

The function `csx_ReleaseIRQ()` releases a previously requested IRQ resource.

The Card Services IRQ resource list is adjusted by `csx_ReleaseIRQ()`. Depending on the adapter hardware, the host bus IRQ connection might also be disabled. Client IRQ handlers always run above lock level and so should take care to perform only Solaris operations that are appropriate for an above-lock-level IRQ handler.

`csx_RequestIRQ()` fails if it has already been called without a corresponding `csx_ReleaseIRQ()`.

STRUCTURE MEMBERS

The structure members of `irq_req_t` are:

```
uint32_t                Socket;          /* socket number */
uint32_t                Attributes;      /* IRQ attribute flags */
csfunction_t            *irq_handler;    /* IRQ handler */
caddr_t                 irq_handler_arg; /* IRQ handler argument */
ddi_iblock_cookie_t     *iblk_cookie;    /* IRQ interrupt
                                         /*   block cookie */
ddi_idevice_cookie_t    *idev_cookie;    /* IRQ interrupt device
                                         /*   cookie */
```

The fields are defined as follows:

`Socket`
Not used in Solaris, but for portability with other Card Services implementations, it should be set to the logical socket number.

`Attributes`
This field is bit-mapped. It specifies details about the type of IRQ desired by the client. The following bits are defined:

`IRQ_TYPE_EXCLUSIVE`
IRQ is exclusive to this socket.

`IRQ_ISR_ADDRESS_PROVIDED`
IRQ handler address provided.

`IRQ_TYPE_EXCLUSIVE`
This bit *must* be set. It indicates that the system IRQ is dedicated to this PC Card.

`IRQ_ISR_ADDRESS_PROVIDED`
This bit *must* be set. It indicates that the `irq_handler` field contains the address of the client's IRQ handler.

`irq_handler`
The client IRQ callback handler entry point is passed in the `irq_handler` field.

`irq_handler_arg`
The client can use the `irq_handler_arg` field to pass client-specific data to the client IRQ callback handler.

`iblk_cookie`
`idev_cookie`
These fields must be used by the client to set up mutexes that are used in the client's IRQ callback handler.

For a specific `csx_ReleaseIRQ()` call, the values in the `irq_req_t` structure must be the same as those returned from the previous `csx_RequestIRQ()` call; otherwise, `CS_BAD_ARGS` is returned and no changes are made to Card Services resources or the socket and adapter hardware.

RETURN VALUES

`CS_SUCCESS`
Successful operation.

`CS_BAD_ARGS`
IRQ description does not match allocation.

`CS_BAD_ATTRIBUTE`
`IRQ_TYPE_EXCLUSIVE` and `IRQ_ISR_ADDRESS_PROVIDED` not set.

`CS_BAD_HANDLE`
Client handle is invalid or `csx_RequestConfiguration`(9F) not done.

`CS_BAD_IRQ`
Unable to allocate IRQ resources.

`CS_IN_USE`
`csx_RequestIRQ()` already done or a previous `csx_RequestIRQ()` has not been done for a corresponding `csx_ReleaseIRQ()`.

`CS_CONFIGURATION_LOCKED`
`csx_RequestConfiguration`(9F) already done or `csx_ReleaseConfiguration`(9F) has not been done.

`CS_NO_CARD`
No PC Card in socket.

`CS_UNSUPPORTED_FUNCTION`
No PCMCIA hardware installed.

CONTEXT

These functions may be called from user or kernel context.

SEE ALSO

`csx_ReleaseConfiguration`(9F), `csx_RequestConfiguration`(9F)

PC Card Card 95 Standard, PCMCIA/JEIDA

NAME

csx_RequestSocketMask, csx_ReleaseSocketMask – set or clear the client's client event mask

SYNOPSIS

```
#include <sys/pccard.h>

int32_t csx_RequestSocketMask(client_handle_t ch,
    request_socket_mask_t *sm);

int32_t csx_ReleaseSocketMask(client_handle_t ch,
    release_socket_mask_t *rm);
```

INTERFACE LEVEL

Solaris DDI Specific (Solaris DDI)

PARAMETERS

ch Client handle returned from `csx_RegisterClient`(9F).

sm Pointer to a `request_socket_mask_t` structure.

rm Pointer to a `release_socket_mask_t` structure.

DESCRIPTION

The function `csx_RequestSocketMask()` sets the client's client event mask and enables the client to start receiving events at its event callback handler. Once this function returns successfully, the client can start receiving events at its event callback handler. Any pending events generated from the call to `csx_RegisterClient`(9F) will be delivered to the client after this call as well. This allows the client to set up the event handler mutexes before the event handler gets called.

`csx_RequestSocketMask()` must be used before calling `csx_GetEventMask`(9F) or `csx_SetEventMask`(9F) for the client event mask for this socket.

The function `csx_ReleaseSocketMask()` clears the client's client event mask.

STRUCTURE MEMBERS

The structure members of `request_socket_mask_t` are:

```
uint32_t    Socket;       /* socket number */
uint32_t    EventMask;    /* event mask to set or return */
```

The structure members of `release_socket_mask_t` are:

```
uint32_t    Socket;       /* socket number */
```

The fields are defined as follows:

`Socket` Not used in Solaris, but for portability with other Card Services implementations, it should be set to the logical socket number.

`EventMask` This field is bit-mapped. Card Services performs event notification based on this field. See `csx_event_handler`(9E) for valid event definitions and for additional information about handling events.

RETURN VALUES

`CS_SUCCESS` Successful operation.

`CS_BAD_HANDLE` Client handle is invalid.

`CS_IN_USE` `csx_ReleaseSocketMask()` has not been done.

`CS_BAD_SOCKET`	`csx_RequestSocketMask()` has not been done.
`CS_UNSUPPORTED_FUNCTION`	No PCMCIA hardware installed.

CONTEXT

These functions may be called from user or kernel context.

SEE ALSO

`csx_event_handler`(9E), `csx_GetEventMask`(9F), `csx_RegisterClient`(9F), `csx_SetEventMask`(9F)

PC Card 95 Standard, PCMCIA/JEIDA

NAME

csx_RequestWindow, csx_ReleaseWindow – request or release window resources

SYNOPSIS

```
#include <sys/pccard.h>

int32_t csx_RequestWindow(client_handle_t ch, window_handle_t
     *wh, win_req_t *wr);

int32_t csx_ReleaseWindow(window_handle_t wh);
```

INTERFACE LEVEL

Solaris DDI Specific (Solaris DDI)

PARAMETERS

ch Client handle returned from `csx_RegisterClient`(9F).

wh Pointer to a `window_handle_t` structure.

wr Pointer to a `win_req_t` structure.

DESCRIPTION

The function `csx_RequestWindow()` requests a block of system address space be assigned to a PC Card in a socket.

The function `csx_ReleaseWindow()` releases window resources which were obtained by a call to `csx_RequestWindow()`. No adapter or socket hardware is modified by this function.

The `csx_MapMemPage`(9F) and `csx_ModifyWindow`(9F) functions use the window handle returned by `csx_RequestWindow()`. This window handle must be freed by calling `csx_ReleaseWindow()` when the client is done using this window.

The PC Card Attribute or Common Memory offset for this window is set by `csx_MapMemPage`(9F).

STRUCTURE MEMBERS

The structure members of `win_req_t` are:

```
uint32_t      Socket;                  /* socket number */
uint32_t      Attributes;              /* window flags */
uint32_t      Base.base;               /* requested window */
                                       /*   base address */
acc_handle_t  Base.handle;             /* returned handle for
                                       /*   base of window */
uint32_t      Size;                    /* window size requested */
                                       /*   or granted */
uint32_t      win_params.AccessSpeed;  /* window access speed */
uint32_t      win_params.IOAddrLines;  /* IO address lines decoded */
uint32_t      ReqOffset;               /* required window offest */
```

The fields are defined as follows:

`Socket`
Not used in Solaris, but for portability with other Card Services implementations, it should be set to the logical socket number.

`Attributes`
This field is bit-mapped. It is defined as follows:

```
WIN_MEMORY_TYPE_IO       Window points to I/O space
WIN_MEMORY_TYPE_CM       Window points to Common Memory space
WIN_MEMORY_TYPE_AM       Window points to Attribute Memory space
WIN_ENABLE               Enable window
WIN_DATA_WIDTH_8         Set window to 8-bit data path
WIN_DATA_WIDTH_16        Set window to 16-bit data path
WIN_ACC_NEVER_SWAP       Host endian byte ordering
WIN_ACC_BIG_ENDIAN       Big endian byte ordering
WIN_ACC_LITTLE_ENDIAN    Little endian byte ordering
WIN_ACC_STRICT_ORDER     Program ordering references
WIN_ACC_UNORDERED_OK     May re-order references
WIN_ACC_MERGING_OK       Merge stores to consecutive locations
WIN_ACC_LOADCACHING_OK   May cache load operations
WIN_ACC_STORECACHING_OK  May cache store operations
```

`WIN_MEMORY_TYPE_IO`

`WIN_MEMORY_TYPE_CM`

`WIN_MEMORY_TYPE_AM` These bits select which type of window is being requested. One of these bits must be set.

`WIN_ENABLE` The client must set this bit to enable the window.

`WIN_ACC_BIG_ENDIAN`

`WIN_ACC_LITTLE_ENDIAN` These bits describe the endian characteristics of the device as big endian or little endian, respectively. Even though most of the devices will have the same endian characteristics as their busses, there are examples of devices with an I/O processor that has opposite endian characteristics of the busses. When either of these bits are set, byte swapping will automatically be performed by the system if the host machine and the device data formats have opposite endian characteristics. The implementation may take advantage of hardware platform byte swapping capabilities.

`WIN_ACC_NEVER_SWAP` When this is specified, byte swapping will not be invoked in the data access functions. The ability to specify the order in which the CPU will reference data is provided by the following `Attributes` bits, only one of which may be specified:

`WIN_ACC_STRICT_ORDER` The data references must be issued by a CPU in program order. Strict ordering is the default behavior.

`WIN_ACC_UNORDERED_OK` The CPU may re-order the data references. This includes all kinds of re-ordering (that is, a load followed by a store may be replaced by a store followed by a load).

`WIN_ACC_MERGING_OK`	The CPU may merge individual stores to consecutive locations. For example, the CPU may turn two consecutive byte stores into one halfword store. It may also batch individual loads. For example, the CPU may turn two consecutive byte loads into one halfword load. This bit also implies re-ordering.
`WIN_ACC_LOADCACHING_OK`	The CPU may cache the data it fetches and reuse it until another store occurs. The default behavior is to fetch new data on every load. This bit also implies merging and re-ordering.
`WIN_ACC_STORECACHING_OK`	The CPU may keep the data in the cache and push it to the device (perhaps with other data) at a later time. The default behavior is to push the data right away. This bit also implies load caching, merging, and re-ordering.

These values are advisory, not mandatory. For example, data can be ordered without being merged or cached, even though a driver requests unordered, merged and cached together.

All other bits in the `Attributes` field must be set to `0`.

On successful return from `csx_RequestWindow()`, `WIN_OFFSET_SIZE` is set in the `Attributes` field when the client must specify card offsets to `csx_MapMemPage`(9F) that are a multiple of the window size.

`Base.base`
This field must be set to `0` on calling `csx_RequestWindow()`.

`Base.handle`
On successful return from `csx_RequestWindow()`, the `Base.handle` field contains an access handle corresponding to the first byte of the allocated memory window which the client must use when accessing the PC Card's memory space via the common access functions. A client must *not* make any assumptions as to the format of the returned `Base.handle` field value.

`Size`
On calling `csx_RequestWindow()`, the `Size` field is the size in bytes of the memory window requested. `Size` may be zero to indicate that Card Services should provide the smallest sized window available. On successful return from `csx_RequestWindow()`, the `Size` field contains the actual size of the window allocated.

`win_params.AccessSpeed`
This field specifies the access speed of the window if the client is requesting a memory window. The `AccessSpeed` field bit definitions use the format of the extended speed byte of the Device ID tuple. If the mantissa is `0` (noted as reserved in the *PC Card 95 Standard*), the lower bits are a binary code representing a speed from the following table:

Code	Speed
0	(Reserved - do not use).
1	250 nsec
2	200 nsec
3	150 nsec
4	100 nse
5-7	(Reserved—do not use.)

To request a window that supports the `WAIT` signal, `OR-in` the `WIN_USE_WAIT` bit to the `AccessSpeed` value before calling this function.

It is recommended that clients use the `csx_ConvertSpeed`(9F) function to generate the appropriate `AccessSpeed` values rather than manually perturbing the `AccessSpeed` field.

`win_params.IOAddrLines`
If the client is requesting an I/O window, the `IOAddrLines` field is the number of I/O address lines decoded by the PC Card in the specified socket. Access to the I/O window is not enabled until `csx_RequestConfiguration`(9F) has been invoked successfully.

`ReqOffset`
This field is a Solaris-specific extension that can be used by clients to generate optimum window offsets passed to `csx_MapMemPage`(9F).

RETURN VALUES

`CS_SUCCESS`
Successful operation.

`CS_BAD_ATTRIBUTE`
`Attributes` are invalid.

`CS_BAD_SPEED`
Speed is invalid.

`CS_BAD_HANDLE`
Client handle is invalid.

`CS_BAD_SIZE`
Window size is invalid.

`CS_NO_CARD`
No PC Card in socket.

`CS_OUT_OF_RESOURCE`
Unable to allocate window.

`CS_UNSUPPORTED_FUNCTION`
No PCMCIA hardware installed.

CONTEXT

These functions may be called from user or kernel context.

SEE ALSO

`csx_ConvertSpeed`(9F), `csx_MapMemPage`(9F), `csx_ModifyWindow`(9F), `csx_RegisterClient`(9F), `csx_RequestConfiguration`(9F)

PC Card 95 Standard, PCMCIA/JEIDA

NAME

csx_ResetFunction – reset a function on a PC card

SYNOPSIS

```
#include <sys/pccard.h>

int32_t csx_ResetFunction(client_handle_t ch, reset_function_t
     *rf);
```

INTERFACE LEVEL

Solaris DDI Specific (Solaris DDI)

PARAMETERS

ch Client handle returned from `csx_RegisterClient`(9F).

rf Pointer to a `reset_function_t` structure.

DESCRIPTION

`csx_ResetFunction()` requests that the specified function on the PC card initiate a reset operation.

STRUCTURE MEMBERS

The structure members of `reset_function_t` are:

```
uint32_t     Socket;        /* socket number */
uint32_t     Attributes;    /* reset attributes  */
```

The fields are defined as follows:

`Socket` Not used in Solaris, but for portability with other Card Services implementations, it should be set to the logical socket number.

`Attributes` Must be `0`.

RETURN VALUES

`CS_SUCCESS`	Card Services has noted the reset request.
`CS_IN_USE`	This Card Services implementation does not permit configured cards to be reset.
`CS_BAD_HANDLE`	Client handle is invalid.
`CS_NO_CARD`	No PC card in socket.
`CS_BAD_SOCKET`	Specified socket or function number is invalid.
`CS_UNSUPPORTED_FUNCTION`	No PCMCIA hardware installed.

CONTEXT

This function may be called from user or kernel context.

SEE ALSO

`csx_event_handler`(9E), `csx_RegisterClient`(9F)

PC Card 95 Standard, PCMCIA/JEIDA

NOTES

`csx_ResetFunction()` has not been implemented in this release and always returns `CS_IN_USE`.

NAME

csx_SetEventMask, csx_GetEventMask – set or return the client event mask for the client

SYNOPSIS

```
#include <sys/pccard.h>

int32_t csx_SetEventMask(client_handle_t ch, sockevent_t *se);

int32_t csx_GetEventMask(client_handle_t ch, sockevent_t *se);
```

INTERFACE LEVEL

Solaris DDI Specific (Solaris DDI)

PARAMETERS

ch Client handle returned from `csx_RegisterClient`(9F).

se Pointer to a `sockevent_t` structure

DESCRIPTION

The function `csx_SetEventMask()` sets the client or global event mask for the client.

The function `csx_GetEventMask()` returns the client or global event mask for the client.

`csx_RequestSocketMask`(9F) must be called before calling `csx_SetEventMask()` for the client event mask for this socket.

STRUCTURE MEMBERS

The structure members of `sockevent_t` are:

```
uint32_t   uint32_t     /* attribute flags for call */
uint32_t   EventMask;   /* event mask to set or return */
uint32_t   Socket;      /* socket number if necessary */
```

The fields are defined as follows:

`Attributes`
This is a bit-mapped field that identifies the type of event mask to be returned. The field is defined as follows:

`CONF_EVENT_MASK_GLOBAL`
Client's global event mask. If set, the client's global event mask is returned.

`CONF_EVENT_MASK_CLIENT`
Client's local event mask. If set, the client's local event mask is returned.

`EventMask`
This field is bit-mapped. Card Services performs event notification based on this field. See `csx_event_handler`(9E) for valid event definitions and for additional information about handling events.

`Socket`
Not used in Solaris, but for portability with other Card Services implementations, it should be set to the logical socket number.

RETURN VALUES

`CS_SUCCESS`	Successful operation.
`CS_BAD_HANDLE`	Client handle is invalid.

`CS_BAD_SOCKET`	`csx_RequestSocketMask`(9F) not called for `CONF_EVENT_MASK_CLIENT`.
`CS_UNSUPPORTED_FUNCTION`	No PCMCIA hardware installed.

CONTEXT

These functions may be called from user or kernel context.

SEE ALSO

`csx_event_handler`(9E), `csx_RegisterClient`(9F), `csx_ReleaseSocketMask`(9F), `csx_RequestSocketMask`(9F)

PC Card 95 Standard, PCMCIA/JEIDA

NAME

csx_SetHandleOffset – set current access handle offset

SYNOPSIS

```
#include <sys/pccard.h>

int32_t csx_SetHandleOffset(acc_handle_t handle, uint32_t offset);
```

INTERFACE LEVEL

Solaris DDI Specific (Solaris DDI)

PARAMETERS

handle Access handle returned by `csx_RequestIRQ`(9F) or `csx_RequestIO`(9F).

offset New access handle offset.

DESCRIPTION

This function sets the current offset for the access handle, *handle*, to *offset*.

RETURN VALUES

`CS_SUCCESS` Successful operation.

CONTEXT

This function may be called from user or kernel context.

SEE ALSO

`csx_GetHandleOffset`(9F), `csx_RequestIO`(9F), `csx_RequestIRQ`(9F)

PC Card 95 Standard, PCMCIA/JEIDA

NAME

csx_ValidateCIS – validate the Card Information Structure (CIS)

SYNOPSIS

```
#include <sys/pccard.h>

int32_t csx_ValidateCIS(client_handle_t ch, cisinfo_t *ci);
```

INTERFACE LEVEL

Solaris DDI Specific (Solaris DDI)

PARAMETERS

ch Client handle returned from `csx_RegisterClient`(9F).

ci Pointer to a `cisinfo_t` structure.

DESCRIPTION

This function validates the Card Information Structure (CIS) on the PC Card in the specified socket.

STRUCTURE MEMBERS

The structure members of `cisinfo_t` are:

```
uint32_t     Socket;    /* socket number to validate CIS on   */
uint32_t     Chains;    /* number of tuple chains in CIS */
uint32_t     Tuples;    /* total number of tuples in CIS */
```

The fields are defined as follows:

`Socket` Not used in Solaris, but for portability with other Card Services implementations, it should be set to the logical socket number.

`Chains` This field returns the number of valid tuple chains located in the CIS. If `0` is returned, the CIS is not valid.

`Tuples` This field is a Solaris-specific extension and it returns the total number of tuples on all the chains in the PC Card's CIS.

RETURN VALUES

`CS_SUCCESS`
Successful operation.

`CS_NO_CIS`
No CIS on PC Card or CIS is invalid.

`CS_NO_CARD`
No PC Card in socket.

`CS_UNSUPPORTED_FUNCTION`
No PCMCIA hardware installed.

CONTEXT

This function may be called from user or kernel context.

SEE ALSO

`csx_GetFirstTuple`(9F), `csx_GetTupleData`(9F), `csx_ParseTuple`(9F), `csx_RegisterClient`(9F)

PC Card 95 Standard, PCMCIA/JEIDA

NAME

datamsg – test whether a message is a data message

SYNOPSIS

```
#include <sys/stream.h>
#include <sys/ddi.h>

int datamsg(unsigned char type);
```

INTERFACE LEVEL

Architecture independent level 1 (DDI/DKI).

PARAMETERS

type The type of message to be tested. The `db_type` field of the `datab`(9S) structure contains the message type. This field may be accessed through the message block using `mp->b_datap->db_type`.

DESCRIPTION

`datamsg()` tests the type of message to determine if it is a data message type (`M_DATA`, `M_DELAY`, `M_PROTO` , or `M_PCPROTO`).

RETURN VALUES

`datamsg` returns

`1` if the message is a data message

`0` otherwise.

CONTEXT

`datamsg()` can be called from user or interrupt context.

EXAMPLES

EXAMPLE 1 The `put`(9E) routine enqueues all data messages for handling by the `srv`(9E) (service) routine. All non-data messages are handled in the `put`(9E) routine.

```
xxxput(q, mp)
     queue_t *q;
     mblk_t *mp;
{
   if (datamsg(mp->b_datap->db_type)) {
          putq(q, mp);
          return;
   }
   switch (mp->b_datap->db_type) {
   case M_FLUSH:
            ...
   }
}
```

SEE ALSO

`put`(9E), `srv`(9E), `allocb`(9F), `datab`(9S), `msgb`(9S)

Writing Device Drivers

STREAMS Programming Guide

NAME

ddi_add_intr, ddi_get_iblock_cookie, ddi_remove_intr – hardware interrupt handling routines

SYNOPSIS

```
#include <sys/types.h>
#include <sys/conf.h>
#include <sys/ddi.h>
#include <sys/sunddi.h>
```

```
int ddi_get_iblock_cookie(dev_info_t *dip, uint_t inumber,
     ddi_iblock_cookie_t *iblock_cookiep);
```

```
int ddi_add_intr(dev_info_t *dip, uint_t inumber,
     ddi_iblock_cookie_t *iblock_cookiep, ddi_idevice_cookie_t
     *idevice_cookiep, uint_t (*int_handler) (caddr_t),, caddr_t
     int_handler_arg);
```

```
void ddi_remove_intr(dev_info_t *dip, uint_t inumber,
     ddi_iblock_cookie_t iblock_cookie);
```

INTERFACE LEVEL

Solaris DDI specific (Solaris DDI).

PARAMETERS

For `ddi_get_iblock_cookie()`:

dip Pointer to `dev_info` structure.

inumber Interrupt number.

iblock_cookiep Pointer to an interrupt block cookie.

For `ddi_add_intr()`:

dip Pointer to `dev_info` structure.

inumber Interrupt number.

iblock_cookiep Optional pointer to an interrupt block cookie where a returned interrupt block cookie is stored.

idevice_cookiep Optional pointer to an interrupt device cookie where a returned interrupt device cookie is stored.

int_handler Pointer to interrupt handler.

int_handler_arg Argument for interrupt handler.

For `ddi_remove_intr()`:

dip Pointer to `dev_info` structure.

inumber Interrupt number.

iblock_cookie Block cookie which identifies the interrupt handler to be removed.

DESCRIPTION

ddi_get_iblock_cookie()

`ddi_get_iblock_cookie()` retrieves the interrupt block cookie associated with a particular interrupt specification. This routine should be called before `ddi_add_intr()` to retrieve the interrupt block cookie needed to initialize locks (`mutex`(9F), `rwlock`(9F)) used by the interrupt routine. The interrupt number *inumber* determines which interrupt specification to retrieve the cookie for. *inumber* is associated with information provided either by the device (see `sbus`(4)) or the hardware configuration file (see `sysbus`(4), `isa`(4), `eisa`(4), and `driver.conf`(4)). If only one interrupt is associated with the device, *inumber* should be `0`.

On a successful return, **iblock_cookiep* contains information needed for initializing locks associated with the interrupt specification corresponding to *inumber* (see `mutex_init`(9F) and `rw_init`(9F)). The driver can then initialize locks acquired by the interrupt routine before calling `ddi_add_intr()` which prevents a possible race condition where the driver's interrupt handler is called immediately *after* the driver has called `ddi_add_intr()` but *before* the driver has initialized the locks. This may happen when an interrupt for a different device occurs on the same interrupt level. If the interrupt routine acquires the lock before the lock has been initialized, undefined behavior may result.

ddi_add_intr( )

`ddi_add_intr()` adds an interrupt handler to the system. The interrupt number *inumber* determines which interrupt the handler will be associated with. (Refer to `ddi_get_iblock_cookie()` above.)

On a successful return, *iblock_cookiep* contains information used for initializing locks associated with this interrupt specification (see `mutex_init`(9F) and `rw_init`(9F)). Note that the interrupt block cookie is usually obtained using `ddi_get_iblock_cookie()` to avoid the race conditions described above (refer to `ddi_get_iblock_cookie()` above). For this reason, *iblock_cookiep* is no longer useful and should be set to `NULL`.

On a successful return, *idevice_cookiep* contains a pointer to a `ddi_idevice_cookie_t` structure (see `ddi_idevice_cookie`(9S)) containing information useful for some devices that have programmable interrupts. If *idevice_cookiep* is set to `NULL`, no value is returned.

The routine *intr_handler*, with its argument *int_handler_arg*, is called upon receipt of the appropriate interrupt. The interrupt handler should return `DDI_INTR_CLAIMED` if the interrupt was claimed, `DDI_INTR_UNCLAIMED` otherwise.

If successful, `ddi_add_intr()` will return `DDI_SUCCESS`; if the interrupt information cannot be found, it will return `DDI_INTR_NOTFOUND`.

ddi_remove_intr( )

`ddi_remove_intr()` removes an interrupt handler from the system. Unloadable drivers should call this routine during their `detach`(9E) routine to remove their interrupt handler from the system.

The device interrupt routine for this instance of the device will not execute after `ddi_remove_intr()` returns. `ddi_remove_intr()` may need to wait for the device interrupt routine to complete before returning. Therefore, locks acquired by the interrupt handler should not be held across the call to `ddi_remove_intr()` or deadlock may result.

For all three functions:

For certain bus types, you can call these DDI functions from a high-interrupt context. These types include ISA, EISA, and SBus buses. See `sysbus`(4), `isa`(4), `eisa`(4), and `sbus`(4) for details.

RETURN VALUES

`ddi_add_intr()` and `ddi_get_iblock_cookie()` return:

`DDI_SUCCESS`	On success.
`DDI_INTR_NOTFOUND`	On failure to find the interrupt.

CONTEXT

`ddi_add_intr()`, `ddi_remove_intr()`, and `ddi_get_iblock_cookie()` can be called from user or kernel context.

SEE ALSO

`driver.conf`(4), `eisa`(4), `isa`(4), `sbus`(4), `sysbus`(4), `attach`(9E), `detach`(9E), `ddi_intr_hilevel`(9F), `mutex`(9F), `mutex_init`(9F), `rw_init`(9F), `rwlock`(9F), `ddi_idevice_cookie`(9S)

Writing Device Drivers

NOTES

`ddi_get_iblock_cookie()` must not be called *after* the driver adds an interrupt handler for the interrupt specification corresponding to *inumber*.

BUGS

The *idevice_cookiep* should really point to a data structure that is specific to the bus architecture that the device operates on. Currently only VMEbus and SBus are supported and a single data structure is used to describe both.

NAME

ddi_add_softintr, ddi_get_soft_iblock_cookie, ddi_remove_softintr, ddi_trigger_softintr – software interrupt handling routines

SYNOPSIS

```
#include <sys/types.h>
#include <sys/conf.h>
#include <sys/ddi.h>
#include <sys/sunddi.h>
```

```
int ddi_get_soft_iblock_cookie(dev_info_t *dip, int preference,
    ddi_iblock_cookie_t *iblock_cookiep);
```

```
int ddi_add_softintr(dev_info_t *dip, int preference, ddi_softintr_t
    *idp, ddi_iblock_cookie_t *iblock_cookiep, ddi_idevice_cookie_t
    *idevice_cookiep, uint_t(*int_handler) (caddr_t int_handler_arg),
    caddr_t int_handler_arg);
```

```
void ddi_remove_softintr(ddi_softintr_t id);
```

```
void ddi_trigger_softintr(ddi_softintr_t id);
```

INTERFACE LEVEL

Solaris DDI specific (Solaris DDI).

PARAMETERS

`ddi_get_soft_iblock_cookie()`

dip Pointer to a `dev_info` structure.

preference The type of soft interrupt to retrieve the cookie for.

iblock_cookiep Pointer to a location to store the interrupt block cookie.

`ddi_add_softintr()`

dip Pointer to `dev_info` structure.

preference A hint value describing the type of soft interrupt to generate.

idp Pointer to a soft interrupt identifier where a returned soft interrupt identifier is stored.

iblock_cookiep Optional pointer to an interrupt block cookie where a returned interrupt block cookie is stored.

idevice_cookiep Optional pointer to an interrupt device cookie where a returned interrupt device cookie is stored (not used).

int_handler Pointer to interrupt handler.

int_handler_arg Argument for interrupt handler.

`ddi_remove_softintr()`

id The identifier specifying which soft interrupt handler to remove.

`ddi_trigger_softintr()`

id The identifier specifying which soft interrupt to trigger and which soft interrupt handler will be called.

DESCRIPTION

For `ddi_get_soft_iblock_cookie()`:

`ddi_get_soft_iblock_cookie()` retrieves the interrupt block cookie associated with a particular soft interrupt preference level. This routine should be called before `ddi_add_softintr()` to retrieve the interrupt block cookie needed to initialize locks (`mutex`(9F), `rwlock`(9F)) used by the software interrupt routine. *preference* determines which type of soft interrupt to retrieve the cookie for. The possible values for *preference* are:

`DDI_SOFTINT_LOW`	Low priority soft interrupt.
`DDI_SOFTINT_MED`	Medium priority soft interrupt.
`DDI_SOFTINT_HIGH`	High priority soft interrupt.

On a successful return, *iblock_cookiep* contains information needed for initializing locks associated with this soft interrupt (see `mutex_init`(9F) and `rw_init`(9F)). The driver can then initialize mutexes acquired by the interrupt routine before calling `ddi_add_softintr()` which prevents a possible race condition where the driver's soft interrupt handler is called immediately *after* the driver has called `ddi_add_softintr()` but *before* the driver has initialized the mutexes. This can happen when a soft interrupt for a different device occurs on the same soft interrupt priority level. If the soft interrupt routine acquires the mutex before it has been initialized, undefined behavior may result.

For `ddi_add_softintr()`:

`ddi_add_softintr()` adds a soft interrupt to the system. The user specified hint *preference* identifies three suggested levels for the system to attempt to allocate the soft interrupt priority at. The value for *preference* should be the same as that used in the corresponding call to `ddi_get_soft_iblock_cookie()`. Refer to the description of `ddi_get_soft_iblock_cookie()` above.

The value returned in the location pointed at by *idp* is the soft interrupt identifier. This value is used in later calls to `ddi_remove_softintr()` and `ddi_trigger_softintr()` to identify the soft interrupt and the soft interrupt handler.

The value returned in the location pointed at by *iblock_cookiep* is an interrupt block cookie which contains information used for initializing mutexes associated with this soft interrupt (see `mutex_init`(9F) and `rw_init`(9F)). Note that the interrupt block cookie is normally obtained using `ddi_get_soft_iblock_cookie()` to avoid the race conditions described above (refer to the description of `ddi_get_soft_iblock_cookie()` above). For this reason, *iblock_cookiep* is no longer useful and should be set to `NULL`.

idevice_cookiep is not used and should be set to `NULL`.

The routine *int_handler*, with its argument *int_handler_arg*, is called upon receipt of a software interrupt. Software interrupt handlers must not assume that they have work to do when they run, since (like hardware interrupt handlers) they may run because a soft interrupt occurred for some other reason. For example, another driver may have triggered a soft interrupt at the same level. For this reason, before triggering the soft interrupt, the driver must indicate to its soft interrupt handler that it should do work. This is usually done by setting a flag in the state structure. The routine *int_handler* checks this flag, reachable through *int_handler_arg*, to determine if it should claim the interrupt and do its work.

The interrupt handler must return `DDI_INTR_CLAIMED` if the interrupt was claimed, `DDI_INTR_UNCLAIMED` otherwise.

If successful, `ddi_add_softintr()` will return `DDI_SUCCESS`; if the interrupt information cannot be found, it will return `DDI_FAILURE`.

For `ddi_remove_softintr()`:

`ddi_remove_softintr()` removes a soft interrupt from the system. The soft interrupt identifier *id*, which was returned from a call to `ddi_add_softintr()`, is used to determine which soft interrupt and which soft interrupt handler to remove. Drivers must remove any soft interrupt handlers before allowing the system to unload the driver.

For `ddi_trigger_softintr()`:

`ddi_trigger_softintr()` triggers a soft interrupt. The soft interrupt identifier *id* is used to determine which soft interrupt to trigger. This function is used by device drivers when they wish to trigger a soft interrupt which has been set up using `ddi_add_softintr()`.

RETURN VALUES

`ddi_add_softintr()` and `ddi_get_soft_iblock_cookie()` return:

`DDI_SUCCESS`	on success
`DDI_FAILURE`	on failure

CONTEXT

These functions can be called from user or kernel context. `ddi_trigger_softintr()` may be called from high-level interrupt context as well.

EXAMPLES

EXAMPLE 1 device using high-level interrupts

In the following example, the device uses high-level interrupts. High-level interrupts are those that interrupt at the level of the scheduler and above. High level interrupts must be handled without using system services that manipulate thread or process states, because these interrupts are not blocked by the scheduler. In addition, high level interrupt handlers must take care to do a minimum of work because they are not preemptable. See `ddi_intr_hilevel`(9F).

EXAMPLE 1 device using high-level interrupts *(Continued)*

In the example, the high-level interrupt routine minimally services the device, and enqueues the data for later processing by the soft interrupt handler. If the soft interrupt handler is not currently running, the high-level interrupt routine triggers a soft interrupt so the soft interrupt handler can process the data. Once running, the soft interrupt handler processes all the enqueued data before returning.

The state structure contains two mutexes. The high-level mutex is used to protect data shared between the high-level interrupt handler and the soft interrupt handler. The low-level mutex is used to protect the rest of the driver from the soft interrupt handler.

```
struct xxstate {
      . . .
      ddi_softintr_t             id;
         ddi_iblock_cookie_t     high_iblock_cookie;
         kmutex_t                      high_mutex;
         ddi_iblock_cookie_t     low_iblock_cookie;
         kmutex_t                      low_mutex;
         int                              softint_running;
      . . .
};
struct xxstate *xsp;
static uint_t xxsoftintr(caddr_t);
static uint_t xxhighintr(caddr_t);
. . .
```

EXAMPLE 2 sample `attach()` routine

The following code fragment would usually appear in the driver's `attach`(9E) routine. `ddi_add_intr`(9F) is used to add the high-level interrupt handler and `ddi_add_softintr()` is used to add the low-level interrupt routine.

```
static uint_t
xxattach(dev_info_t *dip, ddi_attach_cmd_t cmd)
{
         struct xxstate *xsp;
         . . .
      /* get high-level iblock cookie */
         if (ddi_get_iblock_cookie(dip, inumber,
                &xsp->high_iblock_cookie) != DDI_SUCCESS)  {
                      /* clean up */
                      return (DDI_FAILURE); /* fail attach */
         }

         /* initialize high-level mutex */
         mutex_init(&xsp->high_mutex, "xx high mutex", MUTEX_DRIVER,
                (void *)xsp->high_iblock_cookie);

         /* add high-level routine - xxhighintr() */
         if (ddi_add_intr(dip, inumber, NULL, NULL,
                xxhighintr, (caddr_t) xsp) != DDI_SUCCESS)  {
                      /* cleanup */
                      return (DDI_FAILURE); /* fail attach */
```

EXAMPLE 2 sample `attach()` routine *(Continued)*

```
        }

        /* get soft iblock cookie */
        if (ddi_get_soft_iblock_cookie(dip, DDI_SOFTINT_MED,
               &xsp->low_iblock_cookie) != DDI_SUCCESS)  {
                     /* clean up */
                     return (DDI_FAILURE); /* fail attach */
        }

        /* initialize low-level mutex */
        mutex_init(&xsp->low_mutex, "xx low mutex", MUTEX_DRIVER,
               (void *)xsp->low_iblock_cookie);

        /* add low level routine - xxsoftintr() */
        if ( ddi_add_softintr(dip, DDI_SOFTINT_MED, &xsp->id,
               NULL, NULL, xxsoftintr, (caddr_t) xsp) != DDI_SUCCESS) {
                     /* cleanup */
                     return (DDI_FAILURE);  /* fail attach */
        }

        . . .
}
```

EXAMPLE 3 High-level interrupt routine

The next code fragment represents the high-level interrupt routine. The high-level interrupt routine minimally services the device, and enqueues the data for later processing by the soft interrupt routine. If the soft interrupt routine is not already running, `ddi_trigger_softintr()` is called to start the routine. The soft interrupt routine will run until there is no more data on the queue.

```
static uint_t
xxhighintr(caddr_t arg)
{
      struct xxstate *xsp = (struct xxstate *) arg;
         int need_softint;
         . . .
         mutex_enter(&xsp->high_mutex);
         /*
         * Verify this device generated the interrupt
         * and disable the device interrupt.
         * Enqueue data for xxsoftintr() processing.
         */

         /* is xxsoftintr() already running ? */
         if (xsp->softint_running)
                need_softint = 0;
          else
                need_softint = 1;
          mutex_exit(&xsp->high_mutex);

          /* read-only access to xsp->id, no mutex needed */
          if (need_softint)
```

EXAMPLE 3 High-level interrupt routine *(Continued)*

```
                ddi_trigger_softintr(xsp->id);
          . . .
          return (DDI_INTR_CLAIMED);
}

static uint_t
xxsoftintr(caddr_t arg)
{
      struct xxstate *xsp = (struct xxstate *) arg;
      . . .
         mutex_enter(&xsp->low_mutex);
      mutex_enter(&xsp->high_mutex);

      /* verify there is work to do */
      if (work queue empty || xsp->softint_running )  {
                mutex_exit(&xsp->high_mutex);
                mutex_exit(&xsp->low_mutex);
                return (DDI_INTR_UNCLAIMED);
      }

      xsp->softint_running = 1;

         while ( data on queue )  {
                ASSERT(mutex_owned(&xsp->high_mutex));

                /* de-queue data */

                mutex_exit(&xsp->high_mutex);

                /* Process data on queue */

                mutex_enter(&xsp->high_mutex);
          }

          xsp->softint_running = 0;
          mutex_exit(&xsp->high_mutex);
          mutex_exit(&xsp->low_mutex);

          return (DDI_INTR_CLAIMED);
}
```

SEE ALSO

`ddi_add_intr`(9F), `ddi_in_panic`(9F), `ddi_intr_hilevel`(9F), `ddi_remove_intr`(9F), `mutex_init`(9F)

Writing Device Drivers

NOTES

`ddi_add_softintr()` may not be used to add the same software interrupt handler more than once. This is true even if a different value is used for *int_handler_arg* in each of the calls to `ddi_add_softintr()`. Instead, the argument passed to the interrupt handler should indicate what service(s) the interrupt handler should perform. For

example, the argument could be a pointer to the device's soft state structure, which could contain a 'which_service' field that the handler examines. The driver must set this field to the appropriate value before calling `ddi_trigger_softintr()`.

NAME

ddi_binding_name, ddi_get_name – return driver binding name

SYNOPSIS

```
#include <sys/ddi.h>
#include <sys/sunddi.h>

char *ddi_binding_name(dev_info_t *dip);

char *ddi_get_name(dev_info_t *dip);
```

INTERFACE LEVEL

Solaris DDI specific (Solaris DDI).

PARAMETERS

dip A pointer to the device's `dev_info` structure.

DESCRIPTION

`ddi_binding_name()` and `ddi_get_name()` return the driver binding name. This is the name used to select a driver for the device. This name is typically derived from the device `name` property or the device `compatible` property. The name returned may be a driver alias or the driver name.

RETURN VALUES

`ddi_binding_name()` and `ddi_get_name()` return the name used to bind a driver to a device.

CONTEXT

`ddi_binding_name()` and `ddi_get_name()` can be called from user, kernel, or interrupt context.

SEE ALSO

`ddi_node_name`(9F)

Writing Device Drivers

WARNINGS

The name returned by `ddi_binding_name()` and `ddi_get_name()` is read-only.

NAME

ddi_btop, ddi_btopr, ddi_ptob – page size conversions

SYNOPSIS

```
#include <sys/ddi.h>
#include <sys/sunddi.h>
```

```
unsigned long ddi_btop(dev_info_t *dip, unsigned long bytes);
```

```
unsigned long ddi_btopr(dev_info_t *dip, unsigned long bytes);
```

```
unsigned long ddi_ptob(dev_info_t *dip, unsigned long pages);
```

INTERFACE LEVEL

Solaris DDI specific (Solaris DDI).

DESCRIPTION

This set of routines use the parent nexus driver to perform conversions in page size units.

`ddi_btop()` converts the given number of bytes to the number of memory pages that it corresponds to, rounding down in the case that the byte count is not a page multiple.

`ddi_btopr()` converts the given number of bytes to the number of memory pages that it corresponds to, rounding up in the case that the byte count is not a page multiple.

`ddi_ptob()` converts the given number of pages to the number of bytes that it corresponds to.

Because bus nexus may possess their own hardware address translation facilities, these routines should be used in preference to the corresponding DDI/DKI routines `btop`(9F), `btopr`(9F), and `ptob`(9F), which only deal in terms of the pagesize of the main system MMU.

RETURN VALUES

`ddi_btop()` and `ddi_btopr()` return the number of corresponding pages. `ddi_ptob()` returns the corresponding number of bytes. There are no error return values.

CONTEXT

This function can be called from user or interrupt context.

EXAMPLES

EXAMPLE 1 Find the size (in bytes) of one page

```
pagesize = ddi_ptob(dip, 1L);
```

SEE ALSO

`btop`(9F), `btopr`(9F), `ptob`(9F)

Writing Device Drivers

NAME

ddi_check_acc_handle, ddi_check_dma_handle – Check data access and DMA handles

SYNOPSIS

```
#include <sys/ddi.h>
#include <sys/sunddi.h>

int ddi_check_acc_handle(ddi_acc_handle_t acc_handle );

int ddi_check_dma_handle(ddi_dma_handle_t dma_handle );
```

INTERFACE LEVEL

Solaris DDI specific (Solaris DDI)

PARAMETERS

acc_handle Data access handle obtained from a previous call to `ddi_regs_map_setup`(9F), `ddi_dma_mem_alloc`(9F), or similar function.

dma_handle DMA handle obtained from a previous call to `ddi_dma_setup`(9F) or one of its derivatives.

DESCRIPTION

The `ddi_check_acc_handle()` and `ddi_check_dma_handle()` functions check for faults that can interfere with communication between a driver and the device it controls. Each function checks a single handle of a specific type and returns a status value indicating whether faults affecting the resource mapped by the supplied handle have been detected.

If a fault is indicated when checking a data access handle, this implies that the driver is no longer able to access the mapped registers or memory using programmed I/O through that handle. Typically, this might occur after the device has failed to respond to an I/O access (for example, has incurred a bus error or timed out). The effect of programmed I/O accesses made after this happens is undefined; for example, read accesses (for example, `ddi_get8`(9F)) may return random values, and write accesses (for example, `ddi_put8`(9F)) may or may not have any effect. This type of fault is normally fatal to the operation of the device, and the driver should report it via `ddi_dev_report_fault`(9F) specifying `DDI_SERVICE_LOST` for the impact, and `DDI_DATAPATH_FAULT` for the location.

If a fault is indicated when checking a DMA handle, it implies that a fault has been detected that has (or will) affect DMA transactions between the device and the memory currently bound to the handle (or most recently bound, if the handle is currently unbound). Possible causes include the failure of a component in the DMA data path, or an attempt by the device to make an invalid DMA access. The driver may be able to continue by falling back to a non-DMA mode of operation, but in general, DMA faults are non-recoverable. The contents of the memory currently (or previously) bound to the handle should be regarded as indeterminate. The fault indication associated with the current transaction is lost once the handle is (re-)bound, but because the fault may persist, future DMA operations may not succeed.

Note – Some implementations cannot detect all types of failure. If a fault is not indicated, this does not constitute a guarantee that communication is possible. However, if a check fails, this is a positive indication that a problem *does* exist with respect to communication using that handle.

RETURN VALUES

The `ddi_check_acc_handle()` and `ddi_check_dma_handle()` functions return `DDI_SUCCESS` if no faults affecting the supplied handle are detected and `DDI_FAILURE` if any fault affecting the supplied handle is detected.

EXAMPLES

```
static int
xxattach(dev_info_t *dip, ddi_attach_cmd_t cmd)
{
    \\&...
    /* This driver uses only a single register-access handle */
    status = ddi_regs_map_setup(dip, REGSET_ZERO, &regaddr,
                                0, 0, , &acc_attrs, &acc_hdl);
    if (status != DDI_SUCCESS)
        return (DDI_FAILURE);
    \\&...
}

static int
xxread(dev_t  dev, struct uio *uio_p, cred_t *cred_p)
{
    \\&...
    if (ddi_check_acc_handle(acc_hdl) != DDI_SUCCESS) {
        ddi_dev_report_fault(dip, DDI_SERVICE_LOST,
            DDI_DATAPATH_FAULT, "register access fault during read");
        return (EIO);
    }
    \\&...
```

CONTEXT

The `ddi_check_acc_handle()` and `ddi_check_dma_handle()` functions may be called from user, kernel, or interrupt context.

SEE ALSO

`ddi_regs_map_setup`(9F), `ddi_dma_setup`(9F), `ddi_dev_report_fault`(9F), `ddi_get8`(9F), `ddi_put8`(9F)

NAME

ddi_copyin – copy data to a driver buffer

SYNOPSIS

```
#include <sys/types.h>
#include <sys/ddi.h>
#include <sys/sunddi.h>

int ddi_copyin(const void *buf, void *driverbuf, size_t cn, int flags);
```

INTERFACE LEVEL

Solaris DDI specific (Solaris DDI).

PARAMETERS

buf	Source address from which data is transferred.
driverbuf	Driver destination address to which data is transferred.
cn	Number of bytes transferred.
flags	Set of flag bits that provide address space information about *buf*.

DESCRIPTION

This routine is designed for use in driver `ioctl`(9E) routines for drivers that support layered ioctls. `ddi_copyin()` copies data from a source address to a driver buffer. The driver developer must ensure that adequate space is allocated for the destination address.

The *flags* argument is used to determine the address space information about *buf*. If the `FKIOCTL` flag is set, this indicates that *buf* is a kernel address, and `ddi_copyin()` behaves like `bcopy`(9F). Otherwise *buf* is interpreted as a user buffer address, and `ddi_copyin()` behaves like `copyin`(9F).

Addresses that are word-aligned are moved most efficiently. However, the driver developer is not obliged to ensure alignment. This function automatically finds the most efficient move according to address alignment.

RETURN VALUES

`ddi_copyin()` returns `0`, indicating a successful copy. It returns `–1` if one of the following occurs:

- paging fault; the driver tried to access a page of memory for which it did not have read or write access
- invalid user address, such as a user area or stack area
- invalid address that would have resulted in data being copied into the user block

If `–1` is returned to the caller, driver entry point routines should return `EFAULT`.

CONTEXT

`ddi_copyin()` can be called from user or kernel context only.

EXAMPLES

EXAMPLE 1 `ddi_copyin()` example

A driver `ioctl`(9E) routine (line 12) can be used to get or set device attributes or registers. For the `XX_SETREGS` condition (line 25), the driver copies the user data in *arg* to the device registers. If the specified argument contains an invalid address, an error code is returned.

```
1  struct device  {    /* layout of physical device registers  */
2     int      control;    /* physical device control word  */
```

EXAMPLE 1 `ddi_copyin()` example *(Continued)*

```
 3     int      status;    /* physical device status word   */
 4     short    recv_char;    /* receive character from device */
 5     short    xmit_char;    /* transmit character to device  */
 6  };
 7  struct device_state {
 8     volatile struct device *regsp;   /* pointer to device registers */
 9     kmutex_t reg_mutex;              /* protect device registers */
       . . .
10  };

11  static void *statep;    /* for soft state routines */

12  xxioctl(dev_t dev, int cmd, int arg, int mode,
13      cred_t *cred_p, int *rval_p)
14  {
15      struct device_state *sp;
16      volatile struct device *rp;
17      struct device reg_buf;    /* temporary buffer for registers */
18      int instance;

19      instance = getminor(dev);
20      sp = ddi_get_soft_state(statep, instance);
21      if (sp == NULL)
22          return (ENXIO);
23      rp = sp->regsp;
        . . .
24      switch (cmd)  {

25      case XX_GETREGS:    /* copy data to temp. regs. buf */
26            if (ddi_copyin(arg, &reg_buf,
27                sizeof (struct device), mode) != 0) {
28                    return (EFAULT);
29            }

30            mutex_enter(&sp->reg_mutex);
31            /*
32             * Copy data from temporary device register
33             * buffer to device registers.
34             * e.g. rp->control = reg_buf.control;
35             */
36            mutex_exit(&sp->reg_mutex);

37            break;
38      }
39  }
```

SEE ALSO `ioctl`(9E), `bcopy`(9F), `copyin`(9F), `copyout`(9F), `ddi_copyout`(9F), `uiomove`(9F)

Writing Device Drivers

NOTES The value of the *flags* argument to `ddi_copyin()` should be passed through directly from the *mode* argument of `ioctl()` untranslated.

Driver defined locks should not be held across calls to this function.

This should not be used from a streams driver. See `M_COPYIN` and `M_COPYOUT` in *STREAMS Programming Guide*.

NAME

ddi_copyout – copy data from a driver

SYNOPSIS

```
#include <sys/types.h>
#include <sys/ddi.h>
#include <sys/sunddi.h>
```

```
int ddi_copyout(const void *driverbuf, void *buf, size_t cn, int
     flags);
```

INTERFACE LEVEL

Solaris DDI specific (Solaris DDI).

PARAMETERS

driverbuf	Source address in the driver from which the data is transferred.
buf	Destination address to which the data is transferred.
cn	Number of bytes to copy.
flags	Set of flag bits that provide address space information about *buf*.

DESCRIPTION

This routine is designed for use in driver `ioctl`(9E) routines for drivers that support layered ioctls. `ddi_copyout()` copies data from a driver buffer to a destination address, *buf*.

The *flags* argument is used to determine the address space information about *buf*. If the `FKIOCTL` flag is set, this indicates that *buf* is a kernel address, and `ddi_copyout()` behaves like `bcopy`(9F). Otherwise *buf* is interpreted as a user buffer address, and `ddi_copyout()` behaves like `copyout`(9F).

Addresses that are word-aligned are moved most efficiently. However, the driver developer is not obliged to ensure alignment. This function automatically finds the most efficient move algorithm according to address alignment.

RETURN VALUES

Under normal conditions, `0` is returned to indicate a successful copy. Otherwise, `-1` is returned if one of the following occurs:

- paging fault; the driver tried to access a page of memory for which it did not have read or write access
- invalid user address, such as a user area or stack area
- invalid address that would have resulted in data being copied into the user block

If `-1` is returned to the caller, driver entry point routines should return `EFAULT`.

CONTEXT

`ddi_copyout()` can be called from user or kernel context only.

EXAMPLES

EXAMPLE 1 `ddi_copyout()` example

A driver `ioctl`(9E) routine (line 12) can be used to get or set device attributes or registers. In the `XX_GETREGS` condition (line 25), the driver copies the current device register values to another data area. If the specified argument contains an invalid address, an error code is returned.

```
1  struct device  {          /* layout of physical device registers  */
2     int      control;      /* physical device control word  */
```

EXAMPLE 1 `ddi_copyout()` example *(Continued)*

```
 3     int      status;       /* physical device status word   */
 4     short    recv_char;    /* receive character from device */
 5     short    xmit_char;    /* transmit character to device  */
 6  };

 7  struct device_state {
 8     volatile struct device *regsp;   /* pointer to device registers */
 9     kmutex_t reg_mutex;              /* protect device registers */
       . . .
10  };

11  static void *statep; /* for soft state routines */

12  xxioctl(dev_t dev, int cmd, int arg, int mode,
13      cred_t *cred_p, int *rval_p)
14  {
15      struct device_state *sp;
16      volatile struct device *rp;
17      struct device reg_buf;     /* temporary buffer for registers */
18      int instance;

19      instance = getminor(dev);
20      sp = ddi_get_soft_state(statep, instance);
21      if (sp == NULL)
22          return (ENXIO);
23      rp = sp->regsp;
        . . .
24      switch (cmd)  {

25      case XX_GETREGS:   /* copy registers to arg */
26            mutex_enter(&sp->reg_mutex);
27            /*
28             * Copy data from device registers to
29             * temporary device register buffer
30             * e.g. reg_buf.control = rp->control;
31             */
32            mutex_exit(&sp->reg_mutex);
33            if (ddi_copyout(&reg_buf, arg,
34                sizeof (struct device), mode) != 0) {
35                    return (EFAULT);
36            }

37            break;
38      }
39  }
```

SEE ALSO

`ioctl`(9E), `bcopy`(9F), `copyin`(9F), `copyout`(9F), `ddi_copyin`(9F), `uiomove`(9F)

Writing Device Drivers

NOTES

The value of the *flags* argument to `ddi_copyout()` should be passed through directly from the *mode* argument of `ioctl()` untranslated.

Driver defined locks should not be held across calls to this function.

This should not be used from a streams driver. See `M_COPYIN` and `M_COPYOUT` in *STREAMS Programming Guide*.

NAME

ddi_create_minor_node – create a minor node for this device

SYNOPSIS

```
#include <sys/stat.h>
#include <sys/sunddi.h>

int ddi_create_minor_node(dev_info_t *dip, char *name, int spec_type,
    minor_t minor_num, char *node_type, int flag);
```

INTERFACE LEVEL

Solaris DDI specific (Solaris DDI).

PARAMETERS

dip A pointer to the device's `dev_info` structure.

name The name of this particular minor device.

spec_type `S_IFCHR` or `S_IFBLK` for character or block minor devices respectively.

minor_num The minor number for this particular minor device.

node_type Any string that uniquely identifies the type of node. The following predefined node types are provided with this release:

`DDI_NT_SERIAL`	For serial ports
`DDI_NT_SERIAL_MB`	For on board serial ports
`DDI_NT_SERIAL_DO`	For dial out ports
`DDI_NT_SERIAL_MB_DO`	For on board dial out ports
`DDI_NT_BLOCK`	For hard disks
`DDI_NT_BLOCK_CHAN`	For hard disks with channel or target numbers
`DDI_NT_CD`	For CDROM drives
`DDI_NT_CD_CHAN`	For CDROM drives with channel or target numbers
`DDI_NT_FD`	For floppy disks
`DDI_NT_TAPE`	For tape drives
`DDI_NT_NET`	For network devices
`DDI_NT_DISPLAY`	For display devices
`DDI_PSEUDO`	For pseudo devices

flag If the device is a clone device then this flag is set to `CLONE_DEV` else it is set to `0`. The device node class can also be specified using this flag. The device classes do not have an effect in the creation of the device node in a non-clustered environment; but for device drivers intended for use in a clustered environment, one of the following needs to be specified. If the device class is not indicated

the default class for pseudo devices will be NODESPECIFIC_DEV and for physical devices will be ENUMERATE_DEV.

GLOBAL_DEV	The device is a node invariant device and can be opened from any node in the cluster.
NODEBOUND_DEV	The device is node invariant but it has cluster wide state associated with it so that all subsequent opens must be directed there.
NODESPECIFIC_DEV	The device node provides node specific information and must be opened co-located with the process.
ENUMERATE_DEV	Unique cluster wide device nodes. The i/o must take place at the host where the device node was created.

DESCRIPTION

ddi_create_minor_node() provides the necessary information to enable the system to create the /dev and /devices hierarchies. The *name* is used to create the minor name of the block or character special file under the /devices hierarchy. At-sign (@), slash (/), and space are not allowed. The *spec_type* specifies whether this is a block or character device. The *minor_num* is the minor number for the device. The *node_type* is used to create the names in the /dev hierarchy that refers to the names in the /devices hierarchy. See disks(1M), ports(1M), tapes(1M), devlinks(1M). Finally *flag* determines if this is a clone device or not, and what device class the node belongs to.

RETURN VALUES

ddi_create_minor_node() returns:

DDI_SUCCESS	Was able to allocate memory, create the minor data structure, and place it into the linked list of minor devices for this driver.
DDI_FAILURE	Minor node creation failed.

EXAMPLES

EXAMPLE 1 create a data structure describing a minor device with minor number of 0

The following example creates a data structure describing a minor device called *foo* which has a minor number of 0. It is of type DDI_NT_BLOCK (a block device) and it is not a clone device.

```
ddi_create_minor_node(dip, "foo", S_IFBLK, 0, DDI_NT_BLOCK, 0);
```

SEE ALSO

add_drv(1M), devlinks(1M), disks(1M), drvconfig(1M), ports(1M), tapes(1M), attach(9E), ddi_remove_minor_node(9F)

Writing Device Drivers

NAME

ddi_device_copy – copy data from one device register to another device register

SYNOPSIS

```
#include <sys/ddi.h>
#include <sys/sunddi.h>

int ddi_device_copy(ddi_acc_handle_t src_handle, caddr_t src_addr,
    ssize_t src_advcnt, ddi_acc_handle_t dest_handle, caddr_t dest_addr,
    ssize_t dest_advcnt, size_t bytecount, uint_t dev_datasz);
```

INTERFACE LEVEL

Solaris DDI specific (Solaris DDI).

PARAMETERS

src_handle The data access handle of the source device.

src_addr Base data source address.

src_advcnt Number of *dev_datasz* units to advance on every access.

dest_handle The data access handle of the destination device.

dest_addr Base data destination address.

dest_advcnt Number of *dev_datasz* units to advance on every access.

bytecount Number of bytes to transfer.

dev_datasz The size of each data word. Possible values are defined as:

`DDI_DATA_SZ01_ACC`	1 byte data size
`DDI_DATA_SZ02_ACC`	2 bytes data size
`DDI_DATA_SZ04_ACC`	4 bytes data size
`DDI_DATA_SZ08_ACC`	8 bytes data size

DESCRIPTION

`ddi_device_copy()` copies *bytecount* bytes from the source address, *src_addr*, to the destination address, *dest_addr*. The attributes encoded in the access handles, *src_handle* and *dest_handle*, govern how data is actually copied from the source to the destination. Only matching data sizes between the source and destination are supported.

Data will automatically be translated to maintain a consistent view between the source and the destination. The translation may involve byte-swapping if the source and the destination devices have incompatible endian characteristics.

The *src_advcnt* and *dest_advcnt* arguments specifies the number of *dev_datasz* units to advance with each access to the device addresses. A value of `0` will use the same source and destination device address on every access. A positive value increments the corresponding device address by certain number of data size units in the next access. On the other hand, a negative value decrements the device address.

The *dev_datasz* argument determines the size of the data word on each access. The data size must be the same between the source and destination.

RETURN VALUES

`ddi_device_copy()` returns:

`DDI_SUCCESS` Successfully transferred the data.

`DDI_FAILURE`	The byte count is not a multiple *dev_datasz*.

CONTEXT

`ddi_device_copy()` can be called from user, kernel, or interrupt context.

SEE ALSO

`ddi_regs_map_free`(9F), `ddi_regs_map_setup`(9F)

Writing Device Drivers

NAME

ddi_device_zero – zero fill the device

SYNOPSIS

```
#include <sys/ddi.h>
#include <sys/sunddi.h>

int ddi_device_zero(ddi_acc_handle_t handle, caddr_t dev_addr,
     size_t bytecount, ssize_t dev_advcnt, uint_t dev_datasz);
```

INTERFACE LEVEL

Solaris DDI specific (Solaris DDI).

PARAMETERS

handle The data access handle returned from setup calls, such as `ddi_regs_map_setup`(9F).

dev_addr Beginning of the device address.

bytecount Number of bytes to zero.

dev_advcnt Number of *dev_datasz* units to advance on every access.

dev_datasz The size of each data word. Possible values are defined as:

`DDI_DATA_SZ01_ACC`	1 byte data size
`DDI_DATA_SZ02_ACC`	2 bytes data size
`DDI_DATA_SZ04_ACC`	4 bytes data size
`DDI_DATA_SZ08_ACC`	8 bytes data size

DESCRIPTION

`ddi_device_zero()` function fills the given, *bytecount*, number of byte of zeroes to the device register or memory.

The *dev_advcnt* argument determines the value of the device address, *dev_addr*, on each access. A value of `0` will use the same device address, *dev_addr*, on every access. A positive value increments the device address in the next access while a negative value decrements the address. The device address is incremented and decremented in *dev_datasz* units.

The *dev_datasz* argument determines the size of data word on each access.

RETURN VALUES

`ddi_device_zero()` returns:

`DDI_SUCCESS` Successfully zeroed the data.

`DDI_FAILURE` The byte count is not a multiple of *dev_datasz*.

CONTEXT

`ddi_device_zero()` can be called from user, kernel, or interrupt context.

SEE ALSO

`ddi_regs_map_free`(9F), `ddi_regs_map_setup`(9F)

Writing Device Drivers

NAME

ddi_devid_compare, ddi_devid_free, ddi_devid_init, ddi_devid_register, ddi_devid_sizeof, ddi_devid_unregister, ddi_devid_valid – Kernel interfaces for device ids

SYNOPSIS

```
int ddi_devid_compare(ddi_devid_t devid1, ddi_devid_t devid2);

size_t ddi_devid_sizeof(ddi_devid_t devid);

int ddi_devid_init(dev_info_t *dip, ushort_t devid_type, ushort_t
    nbytes, void *id, ddi_devid_t *retdevid);

void ddi_devid_free(ddi_devid_t devid);

int ddi_devid_register(dev_info_t *dip, ddi_devid_t devid );

void ddi_devid_unregister(dev_info_t *dip);

int ddi_devid_valid(ddi_devid_t devid);
```

PARAMETERS

devid The device id address.

devid1 The first of two device id addresses to be compared calling `ddi_devid_compare()`.

devid2 The second of two device id addresses to be compared calling `ddi_devid_compare()`.

dip A `dev_info` pointer, which identifies the device.

devid_type The following device id types may be accepted by the `ddi_devid_init()` function:

`DEVID_SCSI3_WWN`	World Wide Name associated with SCSI-3 devices.
`DEVID_SCSI_SERIAL`	Vendor IDand serial number associated with a SCSI device. Note: This may only be used if known to be unique; otherwise a fabricated device id must be used.
`DEVID_ENCAP`	Device ID of another device. This is for layered device driver usage.
`DEVID_FAB`	Fabricated device ID.

nbytes The length in bytes of device ID.

retdevid The return address of the device ID created by `ddi_devid_init()`.

DESCRIPTION

The following routines are used to provide unique identifiers, device IDs, for devices. Specifically, kernel modules use these interfaces to identify and locate devices, independent of the device's physical connection or its logical device name or number.

`ddi_devid_compare()` compares two device IDs byte-by-byte and determines both equality and sort order.

`ddi_devid_sizeof()` returns the number of bytes allocated for the passed in device ID (*devid*).

`ddi_devid_init()` allocates memory and initializes the opaque device ID structure. This function does not store the *devid*. If the device id is not derived from the device's firmware, it is the driver's responsibility to store the *devid* on some reliable store. When a *devid_type* of either `DEVID_SCSI3_WWN`, `DEVID_SCSI_SERIAL`, or `DEVID_ENCAP` is accepted, an array of bytes (*id*) must be passed in (*nbytes*).

When the *devid_type* `DEVID_FAB` is used, the array of bytes (*id*) must be NULL and the length (*nbytes*) must be zero. The fabricated device ids, `DEVID_FAB` will be initialized with the machine's host id and a timestamp.

Drivers must free the memory allocated by this function, using the `ddi_devid_free()` function.

`ddi_devid_free()` frees the memory allocated by the `ddi_devid_init()` function.

`ddi_devid_register()` registers the device ID address (*devid*) with the DDI framework, associating it with the `dev_info` passed in (*dip*). The drivers must register device IDs at attach time. See `attach`(9E).

`ddi_devid_unregister()` removes the device ID address from the `dev_info` passed in (*dip*). Drivers must use this function to unregister the device ID when devices are being detached. This function does not free the space allocated for the device ID. The driver must free the space allocated for the device ID, using the `ddi_devid_free()` function. See `detach`(9E).

`ddi_devid_valid()` validates the device ID (*devid*) passed in. The driver must use this function to validate any fabricated device ID that has been stored on a device.

RETURN VALUES

`ddi_devid_init()` returns the following values:

`DDI_SUCCESS` Success.

`DDI_FAILURE` Out of memory. An invalid *devid_type* was passed in.

`ddi_devid_valid()` returns the following values:

`DDI_SUCCESS` Valid device ID.

`DDI_FAILURE` Invalid device ID.

`ddi_devid_register()` returns the following values:

`DDI_SUCCESS` Success.

`DDI_FAILURE` Failure. The device ID is already registered or the device ID is invalid.

`ddi_devid_valid()` returns the following values:

`DDI_SUCCESS` Valid device ID.

`DDI_FAILURE` Invalid device ID.

`ddi_devid_compare()` returns the following values:

`-1` The device ID pointed to by *devid1* is less than the device ID pointed to by *devid2*.

`0` The device ID pointed to by *devid1* is equal to the device ID pointed to by *devid2*.

`1` The device ID pointed to by *devid1* is greater than the device ID pointed to by *devid2*.

`ddi_devid_sizeof()` returns the size of the *devid* in numbers of bytes.

CONTEXT

These functions can be called from a user context only.

ATTRIBUTES

See `attributes`(5) for a description of the following attributes:

ATTRIBUTE TYPE	ATTRIBUTE VALUE
MT-Level	Safe

SEE ALSO

`devid_compare`(3DEVID), `devid_deviceid_to_nmlist`(3DEVID), `devid_free`(3DEVID), `devid_free_nmlist`(3DEVID), `devid_get`(3DEVID), `devid_get_minor_name`(3DEVID), `devid_sizeof`(3DEVID), `libdevid`(3LIB), `attributes`(5), `attach`(9E), `detach`(9E)

Writing Device Drivers

NAME

ddi_dev_is_needed – Inform the system that a device's component is required

SYNOPSIS

```
#include <sys/ddi.h>
#include <sys/sunddi.h>
```

int **ddi_dev_is_needed**(dev_info_t **dip*, int *component*, int *level*);

INTERFACE LEVEL

Solaris DDI specific (Solaris DDI)

PARAMETERS

dip Pointer to the device's dev_info structure.

component Component of the driver which is needed.

level Power level at which the component is needed.

DESCRIPTION

The ddi_dev_is_needed() function is obsolete and will be removed in a future release. It is recommended that device drivers use pm_raise_power(9F) and pm_lower_power(9F).

The ddi_dev_is_needed() function informs the system that a device component is needed at the specified power level. The *level* argument must be non-zero.

This function sets a *component* to the required level and sets all devices which depend on this to their normal power levels. If *component* 0 of a device using original Power Management interfaces (calls pm_create_components(9F)) is at power level 0, the ddi_dev_is_needed() call will result in component 0 being returned to normal power and the device being resumed via attach(9E) before ddi_dev_is_needed() returns.

The state of the device should be examined before each physical access. The ddi_dev_is_needed() function should be called to set a *component* to the required power level if the operation to be performed requires the component to be at a power level other than its current level.

The ddi_dev_is_needed() function might cause re-entry of the driver. Deadlock may result if driver locks are held across the call to ddi_dev_is_needed().

RETURN VALUES

The ddi_dev_is_needed() function returns:

DDI_SUCCESS Power successfully set to the requested level.

DDI_FAILURE An error occurred.

EXAMPLES

EXAMPLE 1 disk driver code

A hypothetical disk driver might include this code:

```
     static int
xxdisk_spun_down(struct xxstate *xsp)
{
        return (xsp->power_level[DISK_COMPONENT] < POWER_SPUN_UP);
}
static int
xxdisk_strategy(struct buf *bp)
```

EXAMPLE 1 disk driver code *(Continued)*

```
{

. . .

        mutex_enter(&xxstate_lock);
        /*
         * Since we have to drop the mutex, we have to do this in a loop
         * in case we get preempted and the device gets taken away from
         * us again
         */
        while (device_spun_down(sp)) {
            mutex_exit(&xxstate_lock);
            if (ddi_dev_is_needed(xsp->mydip,
                XXDISK_COMPONENT, XXPOWER_SPUN_UP) != DDI_SUCCESS) {
                    bioerror(bp,EIO);
                    biodone(bp);
                    return (0);
            }
            mutex_enter(&xxstate_lock);
        }
        xsp->device_busy++;
        mutex_exit(&xxstate_lock);

. . .

}
```

CONTEXT

This function can be called from user or kernel context.

ATTRIBUTES

See `attributes`(5) for descriptions of the following attributes:

ATTRIBUTE TYPE	ATTRIBUTE VALUE
Interface stability	Obsolete

SEE ALSO

`pm`(7D), `pm-components`(9), `attach`(9E), `detach`(9E), `power`(9E), `pm_busy_component`(9F), `pm_create_components`(9F), `pm_destroy_components`(9F), `pm_idle_component`(9F)

Writing Device Drivers

NAME

ddi_dev_is_sid – tell whether a device is self-identifying

SYNOPSIS

```
#include <sys/conf.h>
#include <sys/ddi.h>
#include <sys/sunddi.h>
```

```
int ddi_dev_is_sid(dev_info_t *dip);
```

INTERFACE LEVEL

Solaris DDI specific (Solaris DDI).

PARAMETERS

dip A pointer to the device's `dev_info` structure.

DESCRIPTION

`ddi_dev_is_sid()` tells the caller whether the device described by *dip* is self-identifying, that is, a device that can unequivocally tell the system that it exists. This is useful for drivers that support both a self-identifying as well as a non-self-identifying variants of a device (and therefore must be probed).

RETURN VALUES

`DDI_SUCCESS` Device is self-identifying.

`DDI_FAILURE` Device is not self-identifying.

CONTEXT

`ddi_dev_is_sid()` can be called from user or interrupt context.

EXAMPLES

EXAMPLE 1 Using the `ddi_dev_is_sid.()` Function

```
...
int
bz_probe(dev_info_t *dip)
{
    ...
    if (ddi_dev_is_sid(dip) == DDI_SUCCESS) {
        /*
         * This is the self-identifying version (OpenBoot).
         * No need to probe for it because we know it is there.
         * The existence of dip && ddi_dev_is_sid() proves this.
         */
            return (DDI_PROBE_DONTCARE);
    }
    /*
     * Not a self-identifying variant of the device. Now we have to
     * do some work to see whether it is really attached to the
     * system.
     */
...
```

SEE ALSO

`probe`(9E) *Writing Device Drivers*

NAME

ddi_dev_nintrs – return the number of interrupt specifications a device has

SYNOPSIS

```
#include <sys/conf.h>
#include <sys/ddi.h>
#include <sys/sunddi.h>

int ddi_dev_nintrs(dev_info_t *dip, int *resultp);
```

INTERFACE LEVEL

Solaris DDI specific (Solaris DDI).

DESCRIPTION

`ddi_dev_nintrs()` returns the number of interrupt specifications a device has in **resultp*.

RETURN VALUES

`ddi_dev_nintrs()` returns:

`DDI_SUCCESS` A successful return. The number of interrupt specifications that the device has is set in *resultp*.

`DDI_FAILURE` The device has no interrupt specifications.

CONTEXT

`ddi_dev_nintrs()` can be called from user or interrupt context.

SEE ALSO

`isa`(4), `sbus`(4), `ddi_add_intr`(9F), `ddi_dev_nregs`(9F), `ddi_dev_regsize`(9F)

Writing Device Drivers

NAME

ddi_dev_nregs – return the number of register sets a device has

SYNOPSIS

```
#include <sys/conf.h>
#include <sys/ddi.h>
#include <sys/sunddi.h>
```

```
int ddi_dev_nregs(dev_info_t *dip, int *resultp);
```

INTERFACE LEVEL

Solaris DDI specific (Solaris DDI).

PARAMETERS

dip A pointer to the device's `dev_info` structure.

resultp Pointer to an integer that holds the number of register sets on return.

DESCRIPTION

The function `ddi_dev_nregs()` returns the number of sets of registers the device has.

RETURN VALUES

`ddi_dev_nregs()` returns:

`DDI_SUCCESS` A successful return. The number of register sets is returned in *resultp*.

`DDI_FAILURE` The device has no registers.

CONTEXT

`ddi_dev_nregs()` can be called from user or interrupt context.

SEE ALSO

`ddi_dev_nintrs`(9F), `ddi_dev_regsize`(9F)

Writing Device Drivers

NAME

ddi_dev_regsize – return the size of a device's register

SYNOPSIS

```
#include <sys/conf.h>
#include <sys/ddi.h>
#include <sys/sunddi.h>

int ddi_dev_regsize(dev_info_t *dip, uint_t rnumber, off_t *resultp);
```

INTERFACE LEVEL

Solaris DDI specific (Solaris DDI).

PARAMETERS

dip A pointer to the device's `dev_info` structure.

rnumber The ordinal register number. Device registers are associated with a `dev_info` and are enumerated in arbitrary sets from `0` on up. The number of registers a device has can be determined from a call to `ddi_dev_nregs`(9F).

resultp Pointer to an integer that holds the size, in bytes, of the described register (if it exists).

DESCRIPTION

`ddi_dev_regsize()` returns the size, in bytes, of the device register specified by *dip* and *rnumber*. This is useful when, for example, one of the registers is a frame buffer with a varying size known only to its proms.

RETURN VALUES

`ddi_dev_regsize()` returns:

`DDI_SUCCESS` A successful return. The size, in bytes, of the specified register, is set in *resultp*.

`DDI_FAILURE` An invalid (nonexistent) register number was specified.

CONTEXT

`ddi_dev_regsize()` can be called from user or interrupt context.

SEE ALSO

`ddi_dev_nintrs`(9F), `ddi_dev_nregs`(9F)

Writing Device Drivers

NAME

ddi_dev_report_fault – Report a hardware failure

SYNOPSIS

```
#include <sys/ddi.h>
#include <sys/sunddi.h>

void ddi_dev_report_fault (dev_info_t *dip, ddi_fault_impact_t
     impact, ddi_fault_location_t location, const char *message );
```

INTERFACE LEVEL

Solaris DDI specific (Solaris DDI)

PARAMETERS

dip Pointer to the driver's `dev_info` structure to which the fault report relates. (Normally the caller's own `dev_info` pointer).

impact One of a set of enumerated values indicating the impact of the fault on the device's ability to provide normal service.

location One of a set of enumerated values indicating the location of the fault, relative to the hardware controlled by the driver specified by `dip`.

message Text of the message describing the fault being reported.

DESCRIPTION

This function provides a standardized mechanism through which device drivers can report hardware faults. Use of this reporting mechanism enables systems equipped with a fault management system to respond to faults discovered by a driver. On a suitably equipped system, this might include automatic failover to an alternative device and/or scheduling replacement of the faulty hardware.

The driver must indicate the impact of the fault being reported on its ability to provide service by passing one of the following values for the impact parameter:

`DDI_SERVICE_LOST`
Indicates a total loss of service. The driver is unable to implement the normal functions of its hardware.

`DDI_SERVICE_DEGRADED`
The driver is unable to provide normal service, but can provide a partial or degraded level of service. The driver may have to make repeated attempts to perform an operation before it succeeds, or it may be running at less than its configured speed. A driver may use this value to indicate that an alternative device should be used if available, but that it can continue operation if no alternative exists.

`DDI_SERVICE_UNAFFECTED`
The service provided by the device is currently unaffected by the reported fault. This value may be used to report recovered errors for predictive failure analysis.

`DDI_SERVICE_RESTORED`
The driver has resumed normal service, following a previous report that service was lost or degraded. This message implies that any previously reported fault condition no longer exists.

The location parameter should be one of the following values:

DDI_DATAPATH_FAULT
: The fault lies in the datapath between the driver and the device. The device may be unplugged, or a problem may exist in the bus on which the device resides. This value is appropriate if the device is not responding to accesses, (for example, the device may not be present) or if a call to ddi_check_acc_handle(9F) returns DDI_FAILURE.

DDI_DEVICE_FAULT
: The fault lies in the device controlled by the driver. This value is appropriate if the device returns an error from a selftest function, or if the driver is able to determine that device is present and accessible, but is not functioning correctly.

DDI_EXTERNAL_FAULT
: The fault is external to the device. For example, an Ethernet driver would use this value when reporting a cable fault.

If a device returns detectably bad data during normal operation (an "impossible" value in a register or DMA status area, for example), the driver should check the associated handle using ddi_check_acc_handle(9F) or ddi_check_dma_handle(9F) before reporting the fault. If the fault is associated with the handle, the driver should specify DDI_DATAPATH_FAULT rather than DDI_DEVICE_FAULT. As a consequence of this call, the device's state may be updated to reflect the level of service currently available. See ddi_get_devstate(9F).

Note that if a driver calls ddi_get_devstate(9F) and discovers that its device is down, a fault should not be reported- the device is down as the result of a fault that has already been reported. Additionally, a driver should avoid incurring or reporting additional faults when the device is already known to be unusable. The ddi_dev_report_fault(9F) call should only be used to report hardware (device) problems and should not be used to report purely software problems such as memory (or other resource) exhaustion.

EXAMPLES

An Ethernet driver receives an error interrupt from its device if various fault conditions occur. The driver must read an error status register to determine the nature of the fault, and report it appropriately:

```
static int
xx_error_intr(xx_soft_state *ssp)
{
    ...
    error_status = ddi_get32(ssp->handle, &ssp->regs->xx_err_status);
    if (ddi_check_acc_handle(ssp->handle) != DDI_SUCCESS) {
        ddi_dev_report_fault(ssp->dip, DDI_SERVICE_LOST,
            DDI_DATAPATH_FAULT, "register access fault");
        return DDI_INTR_UNCLAIMED;
    }
    if (ssp->error_status & XX_CABLE_FAULT) {
        ddi_dev_report_fault(ssp->dip, DDI_SERVICE_LOST,
            DDI_EXTERNAL_FAULT, "cable fault")
        return DDI_INTR_CLAIMED;
    }
    if (ssp->error_status & XX_JABBER) {
```

```
        ddi_dev_report_fault(ssp->dip, DDI_SERVICE_DEGRADED,
            DDI_EXTERNAL_FAULT, "jabbering detected")
        return DDI_INTR_CLAIMED;
    }
    ...
}
```

CONTEXT

The `ddi_dev_report_fault`(9F) function may be called from user, kernel, or interrupt context.

SEE ALSO

`ddi_check_acc_handle`(9F), `ddi_check_dma_handle`(9F), `ddi_get_devstate`(9F)

NAME

ddi_dma_addr_bind_handle – binds an address to a DMA handle

SYNOPSIS

```
#include <sys/ddi.h>
#include <sys/sunddi.h>
```

```
int ddi_dma_addr_bind_handle(ddi_dma_handle_t handle, struct as
    *as, caddr_t addr, size_t len, uint_t flags, int (*callback)
    (caddr_t) , caddr_t arg, ddi_dma_cookie_t *cookiep, uint_t
    *ccountp);
```

INTERFACE LEVEL

Solaris DDI specific (Solaris DDI).

PARAMETERS

handle The DMA handle previously allocated by a call to `ddi_dma_alloc_handle`(9F).

as A pointer to an address space structure. This parameter should be set to `NULL`, which implies kernel address space.

addr Virtual address of the memory object.

len Length of the memory object in bytes.

flags Valid flags include:

`DDI_DMA_WRITE`	Transfer direction is from memory to I/O.
`DDI_DMA_READ`	Transfer direction is from I/O to memory.
`DDI_DMA_RDWR`	Both read and write.
`DDI_DMA_REDZONE`	Establish an MMU redzone at end of the object.
`DDI_DMA_PARTIAL`	Partial resource allocation.
`DDI_DMA_CONSISTENT`	Nonsequential, random, and small block transfers.
`DDI_DMA_STREAMING`	Sequential, unidirectional, block-sized, and block-aligned transfers.

callback The address of a function to call back later if resources are not currently available. The following special function addresses may also be used.

`DDI_DMA_SLEEP`	Wait until resources are available.
`DDI_DMA_DONTWAIT`	Do not wait until resources are available and do not schedule a callback.

arg Argument to be passed to the callback function, *callback*, if such a function is specified.

cookiep A pointer to the first `ddi_dma_cookie`(9S) structure.

ccountp Upon a successful return, *ccountp* points to a value representing the number of cookies for this DMA object.

DESCRIPTION

`ddi_dma_addr_bind_handle()` allocates DMA resources for a memory object such that a device can perform DMA to or from the object. DMA resources are allocated considering the device's DMA attributes as expressed by `ddi_dma_attr`(9S) (see `ddi_dma_alloc_handle`(9F)).

`ddi_dma_addr_bind_handle()` fills in the first DMA cookie pointed to by *cookiep* with the appropriate address, length, and bus type. `*`*ccountp* is set to the number of DMA cookies representing this DMA object. Subsequent DMA cookies must be retrieved by calling `ddi_dma_nextcookie`(9F) the number of times specified by `*`*countp*-1.

When a DMA transfer completes, the driver frees up system DMA resources by calling `ddi_dma_unbind_handle`(9F).

The *flags* argument contains information for mapping routines.

`DDI_DMA_WRITE`, `DDI_DMA_READ`, `DDI_DMA_RDWR`
: These flags describe the intended direction of the DMA transfer.

`DDI_DMA_STREAMING`
: This flag should be set if the device is doing sequential, unidirectional, block-sized, and block-aligned transfers to or from memory. The alignment and padding constraints specified by the `minxfer` and `burstsizes` fields in the DMA attribute structure, `ddi_dma_attr`(9S) (see `ddi_dma_alloc_handle`(9F)) is used to allocate the most effective hardware support for large transfers.

`DDI_DMA_CONSISTENT`
: This flag should be set if the device accesses memory randomly, or if synchronization steps using `ddi_dma_sync`(9F) need to be as efficient as possible. I/O parameter blocks used for communication between a device and a driver should be allocated using `DDI_DMA_CONSISTENT`.

`DDI_DMA_REDZONE`
: If this flag is set, the system attempts to establish a protected red zone after the object. The DMA resource allocation functions do not guarantee the success of this request as some implementations may not have the hardware ability to support a red zone.

`DDI_DMA_PARTIAL`
: Setting this flag indicates the caller can accept resources for part of the object. That is, if the size of the object exceeds the resources available, only resources for a portion of the object are allocated. The system indicates this condition by returning status `DDI_DMA_PARTIAL_MAP`. At a later point, the caller can use `ddi_dma_getwin`(9F) to change the valid portion of the object for which resources are allocated. If resources were allocated for only part of the object, `ddi_dma_addr_bind_handle()` returns resources for the first DMAwindow.

Even when DDI_DMA_PARTIAL is set, the system may decide to allocate resources for the entire object (less overhead) in which case DDI_DMA_MAPPED is returned.

The callback function *callback* indicates how a caller wants to handle the possibility of resources not being available. If *callback* is set to DDI_DMA_DONTWAIT, the caller does not care if the allocation fails, and can handle an allocation failure appropriately. If *callback* is set to DDI_DMA_SLEEP, the caller wishes to have the allocation routines wait for resources to become available. If any other value is set and a DMA resource allocation fails, this value is assumed to be the address of a function to be called when resources become available. When the specified function is called, *arg* is passed to it as an argument. The specified callback function must return either DDI_DMA_CALLBACK_RUNOUT or DDI_DMA_CALLBACK_DONE. DDI_DMA_CALLBACK_RUNOUT indicates that the callback function attempted to allocate DMA resources but failed. In this case, the callback function is put back on a list to be called again later. DDI_DMA_CALLBACK_DONE indicates that either the allocation of DMA resources was successful or the driver no longer wishes to retry.

The callback function is called in interrupt context. Therefore, only system functions accessible from interrupt context are be available. The callback function must take whatever steps are necessary to protect its critical resources, data structures, queues, and so on.

RETURN VALUES

ddi_dma_addr_bind_handle() returns:

DDI_DMA_MAPPED	Successfully allocated resources for the entire object.
DDI_DMA_PARTIAL_MAP	Successfully allocated resources for a part of the object. This is acceptable when partial transfers are permitted by setting the DDI_DMA_PARTIAL flag in *flags*.
DDI_DMA_INUSE	Another I/O transaction is using the DMA handle.
DDI_DMA_NORESOURCES	No resources are available at the present time.
DDI_DMA_NOMAPPING	The object cannot be reached by the device requesting the resources.
DDI_DMA_TOOBIG	The object is too big. A request of this size can never be satisfied on this particular system. The maximum size varies depending on machine and configuration.

CONTEXT

ddi_dma_addr_bind_handle() can be called from user, kernel, or interrupt context, except when *callback* is set to DDI_DMA_SLEEP, in which case it can only be called from user or kernel context.

SEE ALSO

ddi_dma_alloc_handle(9F), ddi_dma_free_handle(9F), ddi_dma_getwin(9F), ddi_dma_mem_alloc(9F), ddi_dma_mem_free(9F), ddi_dma_nextcookie(9F), ddi_dma_sync(9F), ddi_dma_unbind_handle(9F), ddi_dma_attr(9S), ddi_dma_cookie(9S)

Writing Device Drivers

NOTES If the driver permits partial mapping with the `DDI_DMA_PARTIAL` flag, the number of cookies in each window may exceed the size of the device's scatter/gather list as specified in the `dma_attr_sgllen` field in the `ddi_dma_attr`(9S) structure. In this case, each set of cookies comprising a DMA window will satisfy the DMA attributes as described in the `ddi_dma_attr`(9S) structure in all aspects. The driver should set up its DMA engine and perform one transfer for each set of cookies sufficient for its scatter/gather list, up to the number of cookies for this window, before advancing to the next window using `ddi_dma_getwin`(9F).

NAME

ddi_dma_addr_setup – easier DMA setup for use with virtual addresses

SYNOPSIS

```
#include <sys/ddi.h>
#include <sys/sunddi.h>

int ddi_dma_addr_setup(dev_info_t *dip, struct as *as, caddr_t addr,
     size_t len, uint_t flags, int (*waitfp) (caddr_t),, caddr_t arg,
     ddi_dma_lim_t * lim, ddi_dma_handle_t *handlep);
```

INTERFACE LEVEL

Solaris DDI specific (Solaris DDI).

PARAMETERS

dip A pointer to the device's `dev_info` structure.

as A pointer to an address space structure. Should be set to `NULL`, which implies kernel address space.

addr Virtual address of the memory object.

len Length of the memory object in bytes.

flags Flags that would go into the `ddi_dma_req` structure (see `ddi_dma_req`(9S)).

waitfp The address of a function to call back later if resources aren't available now. The special function addresses `DDI_DMA_SLEEP` and `DDI_DMA_DONTWAIT` (see `ddi_dma_req`(9S)) are taken to mean, respectively, wait until resources are available or, do not wait at all and do not schedule a callback.

arg Argument to be passed to a callback function, if such a function is specified.

lim A pointer to a DMA limits structure for this device (see `ddi_dma_lim_sparc`(9S) or `ddi_dma_lim_x86`(9S)). If this pointer is `NULL`, a default set of DMA limits is assumed.

handlep Pointer to a DMA handle. See `ddi_dma_setup`(9F) for a discussion of handle.

DESCRIPTION

`ddi_dma_addr_setup()` is an interface to `ddi_dma_setup`(9F). It uses its arguments to construct an appropriate `ddi_dma_req` structure and calls `ddi_dma_setup`(9F) with it.

RETURN VALUES

See `ddi_dma_setup`(9F) for the possible return values for this function.

CONTEXT

`ddi_dma_addr_setup()` can be called from user or interrupt context, except when *waitfp* is set to `DDI_DMA_SLEEP`, in which case it can be called from user context only.

SEE ALSO

`ddi_dma_buf_setup`(9F), `ddi_dma_free`(9F), `ddi_dma_htoc`(9F), `ddi_dma_setup`(9F), `ddi_dma_sync`(9F), `ddi_iopb_alloc`(9F), `ddi_dma_lim_sparc`(9S), `ddi_dma_lim_IA`(9S), `ddi_dma_req`(9S)

Writing Device Drivers

NAME

ddi_dma_alloc_handle – allocate DMA handle

SYNOPSIS

```
#include <sys/ddi.h>
#include <sys/sunddi.h>

int ddi_dma_alloc_handle(dev_info_t *dip, ddi_dma_attr_t *attr, int
     (*callback) (caddr_t), caddr_t arg, ddi_dma_handle_t *handlep);
```

INTERFACE LEVEL

Solaris DDI specific (Solaris DDI).

PARAMETERS

dip Pointer to the device's `dev_info` structure.

attr Pointer to a DMA attribute structure for this device (see `ddi_dma_attr`(9S)).

callback The address of a function to call back later if resources aren't available now. The following special function addresses may also be used.

`DDI_DMA_SLEEP`	Wait until resources are available.
`DDI_DMA_DONTWAIT`	Do not wait until resources are available and do not schedule a callback.

arg Argument to be passed to a callback function, if such a function is specified.

handlep Pointer to the DMA handle to be initialized.

DESCRIPTION

`ddi_dma_alloc_handle()` allocates a new DMA handle. A DMA handle is an opaque object used as a reference to subsequently allocated DMA resources. `ddi_dma_alloc_handle()` accepts as parameters the device information referred to by *dip* and the device's DMA attributes described by a `ddi_dma_attr`(9S) structure. A successful call to `ddi_dma_alloc_handle()` fills in the value pointed to by *handlep*. A DMA handle must only be used by the device for which it was allocated and is only valid for one I/O transaction at a time.

The callback function, *callback*, indicates how a caller wants to handle the possibility of resources not being available. If *callback* is set to `DDI_DMA_DONTWAIT`, then the caller does not care if the allocation fails, and can handle an allocation failure appropriately. If *callback* is set to `DDI_DMA_SLEEP`, then the caller wishes to have the the allocation routines wait for resources to become available. If any other value is set, and a DMA resource allocation fails, this value is assumed to be a function to call at a later time when resources may become available. When the specified function is called, it is passed *arg* as an argument. The specified callback function must return either `DDI_DMA_CALLBACK_RUNOUT` or `DDI_DMA_CALLBACK_DONE`. `DDI_DMA_CALLBACK_RUNOUT` indicates that the callback routine attempted to allocate DMA resources but failed to do so, in which case the callback function is put back on a list to be called again later. `DDI_DMA_CALLBACK_DONE` indicates either success at allocating DMA resources or the driver no longer wishes to retry.

The callback function is called in interrupt context. Therefore, only system functions that are accessible from interrupt context is available. The callback function must take whatever steps necessary to protect its critical resources, data structures, queues, and so forth.

When a DMA handle is no longer needed, `ddi_dma_free_handle`(9F) must be called to free the handle.

RETURN VALUES

`ddi_dma_alloc_handle()` returns:

`DDI_SUCCESS`	Successfully allocated a new DMA handle.
`DDI_DMA_BADATTR`	The attributes specified in the `ddi_dma_attr`(9S) structure make it impossible for the system to allocate potential DMA resources.
`DDI_DMA_NORESOURCES`	No resources are available.

CONTEXT

`ddi_dma_alloc_handle()` can be called from user, kernel, or interrupt context, except when *callback* is set to `DDI_DMA_SLEEP`, in which case it can be called from user or kernel context only.

SEE ALSO

`ddi_dma_addr_bind_handle`(9F), `ddi_dma_buf_bind_handle`(9F), `ddi_dma_burstsizes`(9F), `ddi_dma_free_handle`(9F), `ddi_dma_unbind_handle`(9F), `ddi_dma_attr`(9S)

Writing Device Drivers

NAME

ddi_dma_buf_bind_handle – binds a system buffer to a DMA handle

SYNOPSIS

```
#include <sys/ddi.h>
#include <sys/sunddi.h>

int ddi_dma_buf_bind_handle(ddi_dma_handle_t handle, struct buf
     *bp, uint_t flags, int (*callback)(caddr_t), caddr_t arg,
     ddi_dma_cookie_t *cookiep, uint_t *ccountp);
```

INTERFACE LEVEL

Solaris DDI specific (Solaris DDI).

PARAMETERS

handle The DMA handle previously allocated by a call to `ddi_dma_alloc_handle`(9F).

bp A pointer to a system buffer structure (see `buf`(9S)).

flags Valid flags include:

`DDI_DMA_WRITE`	Transfer direction is from memory to I/O
`DDI_DMA_READ`	Transfer direction is from I/O to memory
`DDI_DMA_RDWR`	Both read and write
`DDI_DMA_REDZONE`	Establish an MMU redzone at end of the object.
`DDI_DMA_PARTIAL`	Partial resource allocation
`DDI_DMA_CONSISTENT`	Nonsequential, random, and small block transfers.
`DDI_DMA_STREAMING`	Sequential, unidirectional, block-sized, and block-aligned transfers.

callback The address of a function to call back later if resources are not available now. The following special function addresses may also be used.

`DDI_DMA_SLEEP`	Wait until resources are available.
`DDI_DMA_DONTWAIT`	Do not wait until resources are available and do not schedule a callback.

arg Argument to be passed to the callback function, *callback*, if such a function is specified.

cookiep A pointer to the first `ddi_dma_cookie`(9S) structure.

ccountp Upon a successful return, *ccountp* points to a value representing the number of cookies for this DMA object.

DESCRIPTION

`ddi_dma_buf_bind_handle()` allocates DMA resources for a system buffer such that a device can perform DMA to or from the buffer. DMA resources are allocated considering the device's DMA attributes as expressed by `ddi_dma_attr`(9S) (see `ddi_dma_alloc_handle`(9F)).

`ddi_dma_buf_bind_handle()` fills in the first DMA tocookie pointed to by *cookiep* with the appropriate address, length, and bus type. **ccountp* is set to the number of DMA cookies representing this DMA object. Subsequent DMA cookies must be retrieved by calling `ddi_dma_nextcookie`(9F) **countp*-1 times.

When a DMA transfer completes, the driver should free up system DMA resources by calling `ddi_dma_unbind_handle`(9F).

The *flags* argument contains information for mapping routines.

`DDI_DMA_WRITE`, `DDI_DMA_READ`, `DDI_DMA_RDWR`
: These flags describe the intended direction of the DMA transfer.

`DDI_DMA_STREAMING`
: This flag should be set if the device is doing sequential, unidirectional, block-sized, and block-aligned transfers to or from memory. The alignment and padding constraints specified by the `minxfer` and `burstsizes` fields in the DMA attribute structure, `ddi_dma_attr`(9S) (see `ddi_dma_alloc_handle`(9F)) is used to allocate the most effective hardware support for large transfers.

`DDI_DMA_CONSISTENT`
: This flag should be set if the device accesses memory randomly, or if synchronization steps using `ddi_dma_sync`(9F) need to be as efficient as possible. I/O parameter blocks used for communication between a device and a driver should be allocated using `DDI_DMA_CONSISTENT`.

`DDI_DMA_REDZONE`
: If this flag is set, the system attempts to establish a protected red zone after the object. The DMA resource allocation functions do not guarantee the success of this request as some implementations may not have the hardware ability to support a red zone.

`DDI_DMA_PARTIAL`
: Setting this flag indicates the caller can accept resources for part of the object. That is, if the size of the object exceeds the resources available, only resources for a portion of the object are allocated. The system indicates this condition returning status `DDI_DMA_PARTIAL_MAP`. At a later point, the caller can use `ddi_dma_getwin`(9F) to change the valid portion of the object for which resources are allocated. If resources were allocated for only part of the object, `ddi_dma_addr_bind_handle()` returns resources for the first DMA window. Even when `DDI_DMA_PARTIAL` is set, the system may decide to allocate resources for the entire object (less overhead) in which case `DDI_DMA_MAPPED` is returned.

The callback function, *callback*, indicates how a caller wants to handle the possibility of resources not being available. If *callback* is set to `DDI_DMA_DONTWAIT`, the caller does not care if the allocation fails, and can handle an allocation failure appropriately. If

callback is set to DDI_DMA_SLEEP, the caller wishes to have the allocation routines wait for resources to become available. If any other value is set, and a DMA resource allocation fails, this value is assumed to be the address of a function to call at a later time when resources may become available. When the specified function is called, it is passed *arg* as an argument. The specified callback function must return either DDI_DMA_CALLBACK_RUNOUT or DDI_DMA_CALLBACK_DONE. DDI_DMA_CALLBACK_RUNOUT indicates that the callback function attempted to allocate DMA resources but failed to do so. In this case the callback function is put back on a list to be called again later. DDI_DMA_CALLBACK_DONE indicates either a successful allocation of DMA resources or that the driver no longer wishes to retry.

The callback function is called in interrupt context. Therefore, only system functions accessible from interrupt context are be available. The callback function must take whatever steps necessary to protect its critical resources, data structures, queues, etc.

RETURN VALUES

ddi_dma_buf_bind_handle() returns:

DDI_DMA_MAPPED	Successfully allocated resources for the entire object.
DDI_DMA_PARTIAL_MAP	Successfully allocated resources for a part of the object. This is acceptable when partial transfers are permitted by setting the DDI_DMA_PARTIAL flag in *flags*.
DDI_DMA_INUSE	Another I/O transaction is using the DMA handle.
DDI_DMA_NORESOURCES	No resources are available at the present time.
DDI_DMA_NOMAPPING	The object cannot be reached by the device requesting the resources.
DDI_DMA_TOOBIG	The object is too big. A request of this size can never be satisfied on this particular system. The maximum size varies depending on machine and configuration.

CONTEXT

ddi_dma_buf_bind_handle() can be called from user, kernel, or interrupt context, except when *callback* is set to DDI_DMA_SLEEP, in which case it can be called from user or kernel context only.

SEE ALSO

ddi_dma_addr_bind_handle(9F), ddi_dma_alloc_handle(9F), ddi_dma_free_handle(9F), ddi_dma_getwin(9F), ddi_dma_nextcookie(9F), ddi_dma_sync(9F), ddi_dma_unbind_handle(9F), buf(9S), ddi_dma_attr(9S), ddi_dma_cookie(9S)

Writing Device Drivers

NOTES

If the driver permits partial mapping with the `DDI_DMA_PARTIAL` flag, the number of cookies in each window may exceed the size of the device's scatter/gather list as specified in the `dma_attr_sgllen` field in the `ddi_dma_attr`(9S) structure. In this case, each set of cookies comprising a DMA window will satisfy the DMA attributes as described in the `ddi_dma_attr`(9S) structure in all aspects. The driver should set up its DMA engine and perform one transfer for each set of cookies sufficient for its scatter/gather list, up to the number of cookies for this window, before advancing to the next window using `ddi_dma_getwin`(9F).

NAME

ddi_dma_buf_setup – easier DMA setup for use with buffer structures

SYNOPSIS

```
#include <sys/ddi.h>
#include <sys/sunddi.h>
```

```
int ddi_dma_buf_setup(dev_info_t *dip, struct buf *bp, uint_t flags,
     int (*waitfp) (caddr_t),, caddr_t arg, ddi_dma_lim_t *lim,
     ddi_dma_handle_t *handlep);
```

INTERFACE LEVEL

Solaris DDI specific (Solaris DDI).

PARAMETERS

dip A pointer to the device's `dev_info` structure.

bp A pointer to a system buffer structure (see `buf`(9S)).

flags Flags that go into a `ddi_dma_req` structure (see `ddi_dma_req`(9S)).

waitfp The address of a function to call back later if resources aren't available now. The special function addresses `DDI_DMA_SLEEP` and `DDI_DMA_DONTWAIT` (see `ddi_dma_req`(9S)) are taken to mean, respectively, wait until resources are available, or do not wait at all and do not schedule a callback.

arg Argument to be passed to a callback function, if such a function is specified.

lim A pointer to a DMA limits structure for this device (see `ddi_dma_lim_sparc`(9S) or `ddi_dma_lim_x86`(9S)). If this pointer is `NULL`, a default set of DMA limits is assumed.

handlep Pointer to a DMA handle. See `ddi_dma_setup`(9F) for a discussion of handle.

DESCRIPTION

`ddi_dma_buf_setup()` is an interface to `ddi_dma_setup`(9F). It uses its arguments to construct an appropriate `ddi_dma_req` structure and calls `ddi_dma_setup()` with it.

RETURN VALUES

See `ddi_dma_setup`(9F) for the possible return values for this function.

CONTEXT

`ddi_dma_buf_setup()` can be called from user or interrupt context, except when *waitfp* is set to `DDI_DMA_SLEEP`, in which case it can be called from user context only.

SEE ALSO

`ddi_dma_addr_setup`(9F), `ddi_dma_free`(9F), `ddi_dma_htoc`(9F), `ddi_dma_setup`(9F), `ddi_dma_sync`(9F), `physio`(9F), `buf`(9S), `ddi_dma_lim_sparc`(9S), `ddi_dma_lim_x86`(9S), `ddi_dma_req`(9S)

Writing Device Drivers

NAME

ddi_dma_burstsizes – find out the allowed burst sizes for a DMA mapping

SYNOPSIS

```
#include <sys/conf.h>
#include <sys/ddi.h>
#include <sys/sunddi.h>

int ddi_dma_burstsizes(ddi_dma_handle_t handle);
```

INTERFACE LEVEL

Solaris DDI specific (Solaris DDI).

PARAMETERS

handle A DMA handle that was filled in by a successful call to `ddi_dma_setup`(9F).

DESCRIPTION

`ddi_dma_burstsizes()` returns the allowed burst sizes for a DMA mapping. This value is derived from the `dlim_burstsizes` member of the `ddi_dma_lim_sparc`(9S) structure, but it shows the allowable burstsizes *after* imposing on it the limitations of other device layers in addition to device's own limitations.

RETURN VALUES

`ddi_dma_burstsizes()` returns a binary encoded value of the allowable DMA burst sizes. See `ddi_dma_lim_sparc`(9S) for a discussion of DMA burst sizes.

CONTEXT

This function can be called from user or interrupt context.

SEE ALSO

`ddi_dma_devalign`(9F), `ddi_dma_setup`(9F), `ddi_dma_lim_sparc`(9S), `ddi_dma_req`(9S)

Writing Device Drivers

NAME

ddi_dma_coff – convert a DMA cookie to an offset within a DMA handle

SYNOPSIS

```
#include <sys/conf.h>
#include <sys/ddi.h>
#include <sys/sunddi.h>

int ddi_dma_coff(ddi_dma_handle_t handle, ddi_dma_cookie_t *cookiep,
     off_t *offp);
```

INTERFACE LEVEL

Solaris SPARC DDI (Solaris SPARC DDI).

PARAMETERS

handle The *handle* filled in by a call to `ddi_dma_setup`(9F).

cookiep A pointer to a DMA cookie (see `ddi_dma_cookie`(9S)) that contains the appropriate address, length and bus type to be used in programming the DMA engine.

offp A pointer to an offset to be filled in.

DESCRIPTION

`ddi_dma_coff()` converts the values in DMA cookie pointed to by *cookiep* to an offset (in bytes) from the beginning of the object that the DMA `handle` has mapped.

`ddi_dma_coff()` allows a driver to update a DMA cookie with values it reads from its device's DMA engine after a transfer completes and convert that value into an offset into the object that is mapped for DMA.

RETURN VALUES

`ddi_dma_coff()` returns:

`DDI_SUCCESS` Successfully filled in *offp*.

`DDI_FAILURE` Failed to successfully fill in *offp*.

CONTEXT

`ddi_dma_coff()` can be called from user or interrupt context.

SEE ALSO

`ddi_dma_setup`(9F), `ddi_dma_sync`(9F), `ddi_dma_cookie`(9S)

Writing Device Drivers

NAME

ddi_dma_curwin – report current DMA window offset and size

SYNOPSIS

```
#include <sys/conf.h>
#include <sys/ddi.h>
#include <sys/sunddi.h>
```

```
int ddi_dma_curwin(ddi_dma_handle_t handle, off_t *offp, uint_t
     *lenp);
```

INTERFACE LEVEL

Solaris SPARC DDI specific (Solaris SPARC DDI).

PARAMETERS

handle The DMA handle filled in by a call to `ddi_dma_setup`(9F).

offp A pointer to a value which will be filled in with the current offset from the beginning of the object that is mapped for DMA.

lenp A pointer to a value which will be filled in with the size, in bytes, of the current window onto the object that is mapped for DMA.

DESCRIPTION

`ddi_dma_curwin()` reports the current DMA window offset and size. If a DMA mapping allows partial mapping, that is if the `DDI_DMA_PARTIAL` flag in the `ddi_dma_req`(9S) structure is set, its current (effective) DMA window offset and size can be obtained by a call to `ddi_dma_curwin()`.

RETURN VALUES

`ddi_dma_curwin()` returns:

`DDI_SUCCESS` The current length and offset can be established.

`DDI_FAILURE` Otherwise.

CONTEXT

`ddi_dma_curwin()` can be called from user or interrupt context.

SEE ALSO

`ddi_dma_movwin`(9F), `ddi_dma_setup`(9F), `ddi_dma_req`(9S)

Writing Device Drivers

NAME

ddi_dma_devalign – find DMA mapping alignment and minimum transfer size

SYNOPSIS

```
#include <sys/conf.h>
#include <sys/ddi.h>
#include <sys/sunddi.h>
```

```
int ddi_dma_devalign(ddi_dma_handle_t handle, uint_t *alignment,
     uint_t *minxfr);
```

INTERFACE LEVEL

Solaris DDI specific (Solaris DDI).

PARAMETERS

handle The DMA `handle` filled in by a successful call to `ddi_dma_setup`(9F).

alignment A pointer to an unsigned integer to be filled in with the minimum required alignment for DMA. The alignment is guaranteed to be a power of two.

minxfr A pointer to an unsigned integer to be filled in with the minimum effective transfer size (see `ddi_iomin`(9F), `ddi_dma_lim_sparc`(9S) and `ddi_dma_lim_IA`(9S)). This also is guaranteed to be a power of two.

DESCRIPTION

`ddi_dma_devalign()` determines after a successful DMA mapping (see `ddi_dma_setup`(9F)) the minimum required data alignment and minimum DMA transfer size.

RETURN VALUES

`ddi_dma_devalign()` returns:

`DDI_SUCCESS` The *alignment* and *minxfr* values have been filled.

`DDI_FAILURE` The handle was illegal.

CONTEXT

`ddi_dma_devalign()` can be called from user or interrupt context.

SEE ALSO

`ddi_dma_setup`(9F), `ddi_iomin`(9F), `ddi_dma_lim_sparc`(9S), `ddi_dma_lim_IA`(9S), `ddi_dma_req`(9S)

Writing Device Drivers

NAME

ddi_dmae, ddi_dmae_alloc, ddi_dmae_release, ddi_dmae_prog, ddi_dmae_disable, ddi_dmae_enable, ddi_dmae_stop, ddi_dmae_getcnt, ddi_dmae_1stparty, ddi_dmae_getlim, ddi_dmae_getattr – system DMA engine functions

SYNOPSIS

```
int ddi_dmae_alloc(dev_info_t *dip, int chnl, int (*callback)
     (caddr_t), caddr_t arg);

int ddi_dmae_release(dev_info_t *dip, int chnl);

int ddi_dmae_prog(dev_info_t *dip, struct ddi_dmae_req *dmaereqp,
     ddi_dma_cookie_t *cookiep, int chnl);

int ddi_dmae_disable(dev_info_t *dip, int chnl);

int ddi_dmae_enable(dev_info_t *dip, int chnl);

int ddi_dmae_stop(dev_info_t *dip, int chnl);

int ddi_dmae_getcnt(dev_info_t *dip, int chnl, int *countp);

int ddi_dmae_1stparty(dev_info_t *dip, int chnl);

int ddi_dmae_getlim(dev_info_t *dip, ddi_dma_lim_t *limitsp);

int ddi_dmae_getattr(dev_info_t *dip, ddi_dma_attr_t *attrp);
```

INTERFACE LEVEL

Solaris DDI specific (Solaris DDI).

PARAMETERS

dip A `dev_info` pointer that identifies the device.

chnl A DMA channel number. On ISA or EISA buses this number must be `0`, `1`, `2`, `3`, `5`, `6`, or `7`.

callback The address of a function to call back later if resources are not currently available. The following special function addresses may also be used:

`DDI_DMA_SLEEP`	Wait until resources are available.
`DDI_DMA_DONTWAIT`	Do not wait until resources are available and do not schedule a callback.

arg Argument to be passed to the callback function, if specified.

dmaereqp A pointer to a DMA engine request structure. See `ddi_dmae_req`(9S).

cookiep A pointer to a `ddi_dma_cookie`(9S) object, obtained from `ddi_dma_segtocookie`(9F), which contains the address and count.

countp A pointer to an integer that will receive the count of the number of bytes not yet transferred upon completion of a DMA operation.

limitsp A pointer to a DMA limit structure. See `ddi_dma_lim_IA`(9S).

attrp A pointer to a DMA attribute structure. See `ddi_dma_attr`(9S).

DESCRIPTION

There are three possible ways that a device can perform DMA engine functions:

Bus master DMA
: If the device is capable of acting as a true bus master, then the driver should program the device's DMA registers directly and not make use of the DMA engine functions described here. The driver should obtain the DMA address and count from `ddi_dma_segtocookie`(9F). See `ddi_dma_cookie`(9S) for a description of a DMA cookie.

Third-party DMA
: This method uses the system DMA engine that is resident on the main system board. In this model, the device cooperates with the system's DMA engine to effect the data transfers between the device and memory. The driver uses the functions documented here, except `ddi_dmae_1stparty()`, to initialize and program the DMA engine. For each DMA data transfer, the driver programs the DMA engine and then gives the device a command to initiate the transfer in cooperation with that engine.

First-party DMA
: Using this method, the device uses its own DMA bus cycles, but requires a channel from the system's DMA engine. After allocating the DMA channel, the `ddi_dmae_1stparty()` function may be used to perform whatever configuration is necessary to enable this mode.

ddi_dmae_alloc( )

The `ddi_dmae_alloc()` function is used to acquire a DMA channel of the system DMA engine. `ddi_dmae_alloc()` allows only one device at a time to have a particular DMA channel allocated. It must be called prior to any other system DMA engine function on a channel. If the device allows the channel to be shared with other devices, it must be freed using `ddi_dmae_release()` after completion of the DMA operation. In any case, the channel must be released before the driver successfully detaches. See `detach`(9E). No other driver may acquire the DMA channel until it is released.

If the requested channel is not immediately available, the value of *callback* determines what action will be taken. If the value of *callback* is `DDI_DMA_DONTWAIT`, `ddi_dmae_alloc()` will return immediately. The value `DDI_DMA_SLEEP` will cause the thread to sleep and not return until the channel has been acquired. Any other value is assumed to be a callback function address. In that case, `ddi_dmae_alloc()` returns immediately, and when resources might have become available, the callback function is called (with the argument *arg*) from interrupt context. When the callback function is called, it should attempt to allocate the DMA channel again. If it succeeds or no longer needs the channel, it must return the value `DDI_DMA_CALLBACK_DONE`. If it tries to allocate the channel but fails to do so, it must return the value `DDI_DMA_CALLBACK_RUNOUT`. In this case, the callback funtion is put back on a list to be called again later.

ddi_dmae_prog( )

The `ddi_dmae_prog()` function programs the DMA channel for a DMA transfer. The `ddi_dmae_req` structure contains all the information necessary to set up the channel, except for the memory address and count. Once the channel has been programmed, subsequent calls to `ddi_dmae_prog()` may specify a value of `NULL` for *dmaereqp* if no changes to the programming are required other than the address and count values. It disables the channel prior to setup, and enables the channel before returning. The DMA address and count are specified by passing `ddi_dmae_prog()` a cookie obtained from `ddi_dma_segtocookie`(9F). Other DMA engine parameters are specified by the DMA engine request structure passed in through *dmaereqp*. The fields of that structure are documented in `ddi_dmae_req`(9S).

Before using `ddi_dmae_prog()`, you must allocate system DMA resources using DMA setup functions such as `ddi_dma_buf_setup`(9F). `ddi_dma_segtocookie`(9F) can then be used to retrieve a cookie which contains the address and count. Then this cookie is passed to `ddi_dmae_prog()`.

ddi_dmae_disable( )

The `ddi_dmae_disable()` function disables the DMA channel so that it no longer responds to a device's DMA service requests.

ddi_dmae_enable( )

The `ddi_dmae_enable()` function enables the DMA channel for operation. This may be used to re-enable the channel after a call to `ddi_dmae_disable()`. The channel is automatically enabled after successful programming by `ddi_dmae_prog()`.

ddi_dmae_stop( )

The `ddi_dmae_stop()` function disables the channel and terminates any active operation.

ddi_dmae_getcnt( )

The `ddi_dmae_getcnt()` function examines the count register of the DMA channel and sets **countp* to the number of bytes remaining to be transferred. The channel is assumed to be stopped.

ddi_dmae_1stparty( )

In the case of ISA and EISA buses, `ddi_dmae_1stparty()` configures a channel in the system's DMA engine to operate in a "slave" ("cascade") mode.

When operating in `ddi_dmae_1stparty()` mode, the DMA channel must first be allocated using `ddi_dmae_alloc()` and then configured using `ddi_dmae_1stparty()`. The driver then programs the device to perform the I/O, including the necessary DMA address and count values obtained from `ddi_dma_segtocookie`(9F).

ddi_dmae_getlim( )

The `ddi_dmae_getlim()` function fills in the DMA limit structure, pointed to by *limitsp*, with the DMA limits of the system DMA engine. Drivers for devices that perform their own bus mastering or use first-party DMA must create and initialize their own DMA limit structures; they should not use `ddi_dmae_getlim()`. The DMA limit structure must be passed to the DMA setup routines so that they will know how to break the DMA request into windows and segments (see `ddi_dma_nextseg`(9F) and `ddi_dma_nextwin`(9F)). If the device has any particular restrictions on transfer size or granularity (such as the size of disk sector), the driver should further restrict the values in the structure members before passing them to the DMA setup routines. The driver must not relax any of the restrictions embodied in the structure after it is filled in by `ddi_dmae_getlim()`. After calling

ddi_dmae_getlim(), a driver must examine, and possibly set, the size of the DMA engine's scatter/gather list to determine whether DMA chaining will be used. See ddi_dma_lim_IA(9S) and ddi_dmae_req(9S) for additional information on scatter/gather DMA.

ddi_dmae_getattr

The ddi_dmae_getattr() function fills in the DMA attribute structure, pointed to by *attrp*, with the DMA attributes of the system DMA engine. Drivers for devices that perform their own bus mastering or use first-party DMA must create and initialize their own DMA attribute structures; they should not use ddi_dmae_getattr(). The DMA attribute structure must be passed to the DMA resource allocation functions to provide the information necessary to break the DMA request into DMA windows and DMA cookies. See ddi_dma_nextcookie(9F) and ddi_dma_getwin(9F).

RETURN VALUES

DDI_SUCCESS	Upon success, for all of these routines.
DDI_FAILURE	May be returned due to invalid arguments.
DDI_DMA_NORESOURCES	May be returned by ddi_dmae_alloc() if the requested resources are not available and the value of *dmae_waitfp* is not DDI_DMA_SLEEP.

CONTEXT

If ddi_dmae_alloc() is called from interrupt context, then its *dmae_waitfp* argument and the callback function must not have the value DDI_DMA_SLEEP. Otherwise, all these routines may be called from user or interrupt context.

ATTRIBUTES

See attributes(5) for descriptions of the following attributes:

ATTRIBUTE TYPE	ATTRIBUTE VALUE
Architecture	IA

SEE ALSO

eisa(4), isa(4), attributes(5), ddi_dma_buf_setup(9F), ddi_dma_getwin(9F), ddi_dma_nextcookie(9F), ddi_dma_nextseg(9F), ddi_dma_nextwin(9F), ddi_dma_segtocookie(9F), ddi_dma_setup(9F), ddi_dma_attr(9S), ddi_dma_cookie(9S), ddi_dma_lim_x86(9S), ddi_dma_req(9S), ddi_dmae_req(9S)

NAME

ddi_dma_free – release system DMA resources

SYNOPSIS

```
#include <sys/ddi.h>
#include <sys/sunddi.h>

int ddi_dma_free(ddi_dma_handle_t handle);
```

INTERFACE LEVEL

Solaris DDI specific (Solaris DDI).

PARAMETERS

handle The handle filled in by a call to `ddi_dma_setup`(9F).

DESCRIPTION

`ddi_dma_free()` releases system DMA resources set up by `ddi_dma_setup`(9F). When a DMA transfer completes, the driver should free up system DMA resources established by a call to `ddi_dma_setup`(9F). This is done by a call to `ddi_dma_free()`. `ddi_dma_free()` does an implicit `ddi_dma_sync`(9F) for you so any further synchronization steps are not necessary.

RETURN VALUES

`ddi_dma_free()` returns:

`DDI_SUCCESS` Successfully released resources

`DDI_FAILURE` Failed to free resources

CONTEXT

`ddi_dma_free()` can be called from user or interrupt context.

SEE ALSO

`ddi_dma_addr_setup`(9F), `ddi_dma_buf_setup`(9F), `ddi_dma_htoc`(9F), `ddi_dma_sync`(9F), `ddi_dma_req`(9S)

Writing Device Drivers

NAME

ddi_dma_free_handle – free DMA handle

SYNOPSIS

```
#include <sys/ddi.h>
#include <sys/sunddi.h>

void ddi_dma_free_handle(ddi_dma_handle_t *handle);
```

PARAMETERS

handle A pointer to the DMA handle previously allocated by a call to `ddi_dma_alloc_handle`(9F).

INTERFACE LEVEL

Solaris DDI specific (Solaris DDI).

DESCRIPTION

`ddi_dma_free_handle()` destroys the DMA handle pointed to by *handle*. Any further references to the DMA handle will have undefined results. Note that `ddi_dma_unbind_handle`(9F) must be called prior to `ddi_dma_free_handle()` to free any resources the system may be caching on the handle.

CONTEXT

`ddi_dma_free_handle()` can be called from user, kernel, or interrupt context.

SEE ALSO

`ddi_dma_alloc_handle`(9F), `ddi_dma_unbind_handle`(9F)

Writing Device Drivers

NAME

ddi_dma_getwin – activate a new DMA window

SYNOPSIS

```
#include <sys/ddi.h>
#include <sys/sunddi.h>

int ddi_dma_getwin(ddi_dma_handle_t handle, uint_t win, off_t *offp,
     size_t *lenp, ddi_dma_cookie_t *cookiep, uint_t *ccountp);
```

INTERFACE LEVEL

Solaris DDI specific (Solaris DDI).

PARAMETERS

handle The DMA handle previously allocated by a call to `ddi_dma_alloc_handle`(9F).

win Number of the window to activate.

offp Pointer to an offset. Upon a successful return, *offp* will contain the new offset indicating the beginning of the window within the object.

lenp Upon a successful return, *lenp* will contain the size, in bytes, of the current window.

cookiep A pointer to the first `ddi_dma_cookie`(9S) structure.

ccountp Upon a successful return, *ccountp* will contain the number of cookies for this DMA window.

DESCRIPTION

`ddi_dma_getwin()` activates a new DMA window. If a DMA resource allocation request returns `DDI_DMA_PARTIAL_MAP` indicating that resources for less than the entire object were allocated, the current DMA window can be changed by a call to `ddi_dma_getwin()`.

The caller must first determine the number of DMA windows, *N*, using `ddi_dma_numwin`(9F). `ddi_dma_getwin()` takes a DMA window number from the range *[0..N-1]* as the parameter *win* and makes it the current DMA window.

`ddi_dma_getwin()` fills in the first DMA cookie pointed to by *cookiep* with the appropriate address, length, and bus type. `*`*ccountp* is set to the number of DMA cookies representing this DMA object. Subsequent DMA cookies must be retrieved using `ddi_dma_nextcookie`(9F).

`ddi_dma_getwin()` takes care of underlying resource synchronizations required to shift the window. However accessing the data prior to or after moving the window requires further synchronization steps using `ddi_dma_sync`(9F).

`ddi_dma_getwin()` is normally called from an interrupt routine. The first invocation of the DMA engine is done from the driver. All subsequent invocations of the DMA engine are done from the interrupt routine. The interrupt routine checks to see if the request has been completed. If it has, the interrupt routine returns without invoking another DMA transfer. Otherwise, it calls `ddi_dma_getwin()` to shift the current window and start another DMA transfer.

RETURN VALUES

`ddi_dma_getwin()` returns:

`DDI_SUCCESS`	Resources for the specified DMA window are allocated.
`DDI_FAILURE`	*win* is not a valid window index.

CONTEXT

`ddi_dma_getwin()` can be called from user, kernel, or interrupt context.

SEE ALSO

`ddi_dma_addr_bind_handle`(9F), `ddi_dma_alloc_handle`(9F), `ddi_dma_buf_bind_handle`(9F), `ddi_dma_nextcookie`(9F), `ddi_dma_numwin`(9F), `ddi_dma_sync`(9F), `ddi_dma_unbind_handle`(9F), `ddi_dma_cookie`(9S)

Writing Device Drivers

NAME

ddi_dma_htoc – convert a DMA handle to a DMA address cookie

SYNOPSIS

```
#include <sys/conf.h>
#include <sys/ddi.h>
#include <sys/sunddi.h>

int ddi_dma_htoc(ddi_dma_handle_t handle, off_t off,
     ddi_dma_cookie_t *cookiep);
```

INTERFACE LEVEL

Solaris SPARC DDI specific (Solaris SPARC DDI).

PARAMETERS

handle The handle filled in by a call to `ddi_dma_setup`(9F).

off An offset into the object that *handle* maps.

cookiep A pointer to a `ddi_dma_cookie`(9S) structure.

DESCRIPTION

`ddi_dma_htoc()` takes a DMA handle (established by `ddi_dma_setup`(9F)), and fills in the cookie pointed to by *cookiep* with the appropriate address, length, and bus type to be used to program the DMA engine.

RETURN VALUES

`ddi_dma_htoc()` returns:

`DDI_SUCCESS` Successfully filled in the cookie pointed to by *cookiep*.

`DDI_FAILURE` Failed to successfully fill in the cookie.

CONTEXT

`ddi_dma_htoc()` can be called from user or interrupt context.

SEE ALSO

`ddi_dma_addr_setup`(9F), `ddi_dma_buf_setup`(9F), `ddi_dma_setup`(9F), `ddi_dma_sync`(9F), `ddi_dma_cookie`(9S)

Writing Device Drivers

NAME

ddi_dma_mem_alloc – allocate memory for DMA transfer

SYNOPSIS

```
#include <sys/ddi.h>
#include <sys/sunddi.h>

int ddi_dma_mem_alloc(ddi_dma_handle_t handle, size_t length,
     ddi_device_acc_attr_t *accattrp, uint_t flags, int (*waitfp)
     (caddr_t),, caddr_t arg, caddr_t *kaddrp, size_t *real_length,
     ddi_acc_handle_t *handlep);
```

INTERFACE LEVEL

Solaris DDI specific (Solaris DDI).

PARAMETERS

handle The DMA handle previously allocated by a call to `ddi_dma_alloc_handle`(9F).

length The length in bytes of the desired allocation.

accattrp Pointer to a device access attribute structure of this device (see `ddi_device_acc_attr`(9S)).

flags Data transfer mode flags. Possible values are:

`DDI_DMA_STREAMING`	Sequential, unidirectional, block-sized, and block-aligned transfers.
`DDI_DMA_CONSISTENT`	Nonsequential transfers of small objects.

waitfp The address of a function to call back later if resources are not available now. The callback function indicates how a caller wants to handle the possibility of resources not being available. If callback is set to `DDI_DMA_DONTWAIT`, the caller does not care if the allocation fails, and can handle an allocation failure appropriately. If callback is set to `DDI_DMA_SLEEP`, the caller wishes to have the allocation routines wait for resources to become available. If any other value is set and a DMA resource allocation fails, this value is assumed to be the address of a function to be called when resources become available. When the specified function is called, arg is passed to it as an argument. The specified callback function must return either `DDI_DMA_CALLBACK_RUNOUT` or `DDI_DMA_CALLBACK_DONE`. `DDI_DMA_CALLBACK_RUNOUT` indicates that the callback function attempted to allocate DMA resources but failed. In this case, the callback function is put back on a list to be called again later. `DDI_DMA_CALLBACK_DONE` indicates that either the allocation of DMA resources was successful or the driver no longer wishes to retry. The callback function is called in interrupt context. Therefore, only system functions accessible from interrupt context are be available.

The callback function must take whatever steps are necessary to protect its critical resources, data structures, queues, and so on.

arg Argument to be passed to the callback function, if such a function is specified.

kaddrp On successful return, *kaddrp* points to the allocated memory.

real_length The amount of memory, in bytes, allocated. Alignment and padding requirements may require `ddi_dma_mem_alloc()` to allocate more memory than requested in *length*.

handlep Pointer to a data access handle.

DESCRIPTION

`ddi_dma_mem_alloc()` allocates memory for DMA transfers to or from a device. The allocation will obey the alignment, padding constraints and device granularity as specified by the DMA attributes (see `ddi_dma_attr`(9S)) passed to `ddi_dma_alloc_handle`(9F) and the more restrictive attributes imposed by the system.

flags should be set to `DDI_DMA_STREAMING` if the device is doing sequential, unidirectional, block-sized, and block-aligned transfers to or from memory. The alignment and padding constraints specified by the `minxfer` and `burstsizes` fields in the DMA attribute structure, `ddi_dma_attr`(9S) (see `ddi_dma_alloc_handle`(9F)) will be used to allocate the most effective hardware support for large transfers. For example, if an I/O transfer can be sped up by using an I/O cache, which has a minimum transfer of one cache line, `ddi_dma_mem_alloc()` will align the memory at a cache line boundary and it will round up *real_length* to a multiple of the cache line size.

flags should be set to `DDI_DMA_CONSISTENT` if the device accesses memory randomly, or if synchronization steps using `ddi_dma_sync`(9F) need to be as efficient as possible. I/O parameter blocks used for communication between a device and a driver should be allocated using `DDI_DMA_CONSISTENT`.

The device access attributes are specified in the location pointed by the *accattrp* argument (see `ddi_device_acc_attr`(9S)).

The data access handle is returned in *handlep*. *handlep* is opaque – drivers may not attempt to interpret its value. To access the data content, the driver must invoke `ddi_get8`(9F) or `ddi_put8`(9F) (depending on the data transfer direction) with the data access handle.

DMA resources must be established before performing a DMA transfer by passing *kaddrp* and *real_length* as returned from `ddi_dma_mem_alloc()` and the flag `DDI_DMA_STREAMING` or `DDI_DMA_CONSISTENT` to `ddi_dma_addr_bind_handle`(9F). In addition, to ensure the consistency of a memory object shared between the CPU and the device after a DMA transfer, explicit synchronization steps using `ddi_dma_sync`(9F) or `ddi_dma_unbind_handle`(9F) are required.

RETURN VALUES

`ddi_dma_mem_alloc()` returns:

`DDI_SUCCESS` Memory successfully allocated.

`DDI_FAILURE` Memory allocation failed.

CONTEXT

`ddi_dma_mem_alloc()` can be called from user or interrupt context, except when *waitfp* is set to `DDI_DMA_SLEEP`, in which case it can be called from user context only.

SEE ALSO

`ddi_dma_addr_bind_handle`(9F), `ddi_dma_alloc_handle`(9F), `ddi_dma_mem_free`(9F), `ddi_dma_sync`(9F), `ddi_dma_unbind_handle`(9F), `ddi_get8`(9F), `ddi_put8`(9F), `ddi_device_acc_attr`(9S), `ddi_dma_attr`(9S)

Writing Device Drivers

WARNINGS

If `DDI_NEVERSWAP_ACC` is specified, memory can be used for any purpose; but if either endian mode is specified, you must use `ddi_get/put*` and never anything else.

NAME

ddi_dma_mem_free – free previously allocated memory

SYNOPSIS

```
#include <sys/ddi.h>
#include <sys/sunddi.h>

void ddi_dma_mem_free(ddi_acc_handle_t *handlep);
```

PARAMETERS

handlep Pointer to the data access handle previously allocated by a call to `ddi_dma_mem_alloc`(9F).

INTERFACE LEVEL

Solaris DDI specific (Solaris DDI).

DESCRIPTION

`ddi_dma_mem_free()` deallocates the memory acquired by `ddi_dma_mem_alloc`(9F). In addition, it destroys the data access handle *handlep* associated with the memory.

CONTEXT

`ddi_dma_mem_free()` can be called from user, kernel, or interrupt context.

SEE ALSO

`ddi_dma_mem_alloc`(9F)

Writing Device Drivers

NAME

ddi_dma_movwin – shift current DMA window

SYNOPSIS

```
#include <sys/ddi.h>
#include <sys/sunddi.h>

int ddi_dma_movwin(ddi_dma_handle_t handle, off_t *offp, uint_t
     *lenp, ddi_dma_cookie_t *cookiep);
```

INTERFACE LEVEL

Solaris SPARC DDI specific (Solaris SPARC DDI).

PARAMETERS

handle The DMA handle filled in by a call to `ddi_dma_setup`(9F).

offp A pointer to an offset to set the DMA window to. Upon a successful return, it will be filled in with the new offset from the beginning of the object resources are allocated for.

lenp A pointer to a value which must either be the current size of the DMA window (as known from a call to `ddi_dma_curwin`(9F) or from a previous call to `ddi_dma_movwin()`). Upon a successful return, it will be filled in with the size, in bytes, of the current window.

cookiep A pointer to a DMA cookie (see `ddi_dma_cookie`(9S)). Upon a successful return, cookiep is filled in just as if an implicit `ddi_dma_htoc`(9F) had been made.

DESCRIPTION

`ddi_dma_movwin()` shifts the current DMA window. If a DMA request allows the sytem to allocate resources for less than the entire object by setting the `DDI_DMA_PARTIAL` flag in the `ddi_dma_req`(9S) structure, the current DMA window can be shifted by a call to `ddi_dma_movwin()`.

The caller must first determine the current DMA window size by a call to `ddi_dma_curwin`(9F). Using the current offset and size of the window thus retrieved, the caller of `ddi_dma_movwin()` may change the window onto the object by changing the offset by a value which is some multiple of the size of the DMA window.

`ddi_dma_movwin()` takes care of underlying resource synchronizations required to `shift` the window. However, if you want to *access* the data prior to or after moving the window, further synchronizations using `ddi_dma_sync`(9F) are required.

This function is normally called from an interrupt routine. The first invocation of the DMA engine is done from the driver. All subsequent invocations of the DMA engine are done from the interrupt routine. The interrupt routine checks to see if the request has been completed. If it has, it returns without invoking another DMA transfer. Otherwise it calls `ddi_dma_movwin()` to shift the current window and starts another DMA transfer.

RETURN VALUES

`ddi_dma_movwin()` returns:

`DDI_SUCCESS` The current length and offset are legal and have been set.

`DDI_FAILURE` Otherwise.

CONTEXT

`ddi_dma_movwin()` can be called from user or interrupt context.

SEE ALSO

`ddi_dma_curwin`(9F), `ddi_dma_htoc`(9F), `ddi_dma_setup`(9F), `ddi_dma_sync`(9F), `ddi_dma_cookie`(9S), `ddi_dma_req`(9S)

Writing Device Drivers

WARNINGS

The caller must guarantee that the resources used by the object are inactive prior to calling this function.

NAME

ddi_dma_nextcookie – retrieve subsequent DMA cookie

SYNOPSIS

```
#include <sys/ddi.h>
#include <sys/sunddi.h>
```

void **ddi_dma_nextcookie**(ddi_dma_handle_t *handle*, ddi_dma_cookie_t **cookiep*);

PARAMETERS

handle The handle previously allocated by a call to ddi_dma_alloc_handle(9F).

cookiep A pointer to a ddi_dma_cookie(9S) structure.

INTERFACE LEVEL

Solaris DDI specific (Solaris DDI).

DESCRIPTION

ddi_dma_nextcookie() retrieves subsequent DMA cookies for a DMA object. ddi_dma_nextcookie() fills in the ddi_dma_cookie(9S) structure pointed to by *cookiep*. The ddi_dma_cookie(9S) structure must be allocated prior to calling ddi_dma_nextcookie().

The DMA cookie count returned by ddi_dma_buf_bind_handle(9F), ddi_dma_addr_bind_handle(9F), or ddi_dma_getwin(9F) indicates the number of DMA cookies a DMA object consists of. If the resulting cookie count, *N*, is larger than 1, ddi_dma_nextcookie() must be called *N*-1 times to retrieve all DMA cookies.

CONTEXT

ddi_dma_nextcookie() can be called from user, kernel, or interrupt context.

EXAMPLES

EXAMPLE 1 process a scatter-gather list of I/O requests

This example demonstrates the use of ddi_dma_nextcookie() to process a scatter-gather list of I/O requests.

```
/* setup scatter-gather list with multiple DMA cookies */
ddi_dma_cookie_t    dmacookie;
uint_t            ccount;
. . .

status = ddi_dma_buf_bind_handle(handle, bp, DDI_DMA_READ,
    NULL, NULL, &dmacookie, &ccount);

if (status == DDI_DMA_MAPPED) {

    /* program DMA engine with first cookie */

    while (--ccount > 0) {
        ddi_dma_nextcookie(handle, &dmacookie);
        /* program DMA engine with next cookie */
    }
}
. . .
```

EXAMPLE 1 process a scatter-gather list of I/O requests *(Continued)*

SEE ALSO

`ddi_dma_addr_bind_handle`(9F), `ddi_dma_alloc_handle`(9F), `ddi_dma_buf_bind_handle`(9F), `ddi_dma_unbind_handle`(9F), `ddi_dma_cookie`(9S)

Writing Device Drivers

NAME

ddi_dma_nextseg – get next DMA segment

SYNOPSIS

```
#include <sys/ddi.h>
#include <sys/sunddi.h>

int ddi_dma_nextseg(ddi_dma_win_t win, ddi_dma_seg_t seg,
     ddi_dma_seg_t *nseg);
```

INTERFACE LEVEL

Solaris DDI specific (Solaris DDI).

PARAMETERS

win A DMA window.

seg The current DMA segment or NULL.

nseg A pointer to the next DMA segment to be filled in. If *seg* is NULL, a pointer to the first segment within the specified window is returned.

DESCRIPTION

ddi_dma_nextseg() gets the next DMA segment within the specified window *win*. If the current segment is NULL, the first DMA segment within the window is returned.

A DMA segment is always required for a DMA window. A DMA segment is a contiguous portion of a DMA window (see ddi_dma_nextwin(9F)) which is entirely addressable by the device for a data transfer operation.

An example where multiple DMA segments are allocated is where the system does not contain DVMA capabilities and the object may be non-contiguous. In this example the object will be broken into smaller contiguous DMA segments. Another example is where the device has an upper limit on its transfer size (for example an 8-bit address register) and has expressed this in the DMA limit structure (see ddi_dma_lim_sparc(9S) or ddi_dma_lim_x86(9S)). In this example the object will be broken into smaller addressable DMA segments.

RETURN VALUES

ddi_dma_nextseg() returns:

DDI_SUCCESS Successfully filled in the next segment pointer.

DDI_DMA_DONE There is no next segment. The current segment is the final segment within the specified window.

DDI_DMA_STALE *win* does not refer to the currently active window.

CONTEXT

ddi_dma_nextseg() can be called from user or interrupt context.

EXAMPLES

For an example, see ddi_dma_segtocookie(9F).

SEE ALSO

ddi_dma_addr_setup(9F), ddi_dma_buf_setup(9F), ddi_dma_nextwin(9F), ddi_dma_segtocookie(9F), ddi_dma_sync(9F), ddi_dma_lim_sparc(9S), ddi_dma_lim_IA(9S), ddi_dma_req(9S)

Writing Device Drivers

NAME

ddi_dma_nextwin – get next DMA window

SYNOPSIS

```
#include <sys/ddi.h>
#include <sys/sunddi.h>

int ddi_dma_nextwin(ddi_dma_handle_t handle, ddi_dma_win_t win,
     ddi_dma_win_t *nwin);
```

INTERFACE LEVEL

Solaris DDI specific (Solaris DDI).

PARAMETERS

handle A DMA handle.

win The current DMA window or `NULL`.

nwin A pointer to the next DMA window to be filled in. If *win* is `NULL`, a pointer to the first window within the object is returned.

DESCRIPTION

`ddi_dma_nextwin()` shifts the current DMA window *win* within the object referred to by *handle* to the next DMA window *nwin*. If the current window is `NULL`, the first window within the object is returned. A DMA window is a portion of a DMA object or might be the entire object. A DMA window has system resources allocated to it and is prepared to accept data transfers. Examples of system resources are DVMA mapping resources and intermediate transfer buffer resources.

All DMA objects require a window. If the DMA window represents the whole DMA object it has system resources allocated for the entire data transfer. However, if the system is unable to setup the entire DMA object due to system resource limitations, the driver writer may allow the system to allocate system resources for less than the entire DMA object. This can be accomplished by specifying the `DDI_DMA_PARTIAL` flag as a parameter to `ddi_dma_buf_setup`(9F) or `ddi_dma_addr_setup`(9F) or as part of a `ddi_dma_req`(9S) structure in a call to `ddi_dma_setup`(9F).

Only the window that has resources allocated is valid per object at any one time. The currently valid window is the one that was most recently returned from `ddi_dma_nextwin()`. Furthermore, because a call to `ddi_dma_nextwin()` will reallocate system resources to the new window, the previous window will become invalid. It is a *severe* error to call `ddi_dma_nextwin()` before any transfers into the current window are complete.

`ddi_dma_nextwin()` takes care of underlying memory synchronizations required to shift the window. However, if you want to access the data before or after moving the window, further synchronizations using `ddi_dma_sync`(9F) are required.

RETURN VALUES

`ddi_dma_nextwin()` returns:

`DDI_SUCCESS` Successfully filled in the next window pointer.

`DDI_DMA_DONE` There is no next window. The current window is the final window within the specified object.

`DDI_DMA_STALE` *win* does not refer to the currently active window.

CONTEXT

`ddi_dma_nextwin()` can be called from user or interrupt context.

EXAMPLES

For an example see `ddi_dma_segtocookie`(9F).

SEE ALSO

`ddi_dma_addr_setup`(9F), `ddi_dma_buf_setup`(9F), `ddi_dma_nextseg`(9F), `ddi_dma_segtocookie`(9F), `ddi_dma_sync`(9F), `ddi_dma_req`(9S)

Writing Device Drivers

NAME

ddi_dma_numwin – retrieve number of DMA windows

SYNOPSIS

```
#include <sys/ddi.h>
#include <sys/sunddi.h>

int ddi_dma_numwin(ddi_dma_handle_t handle, uint_t *nwinp);
```

PARAMETERS

handle The DMA handle previously allocated by a call to `ddi_dma_alloc_handle`(9F).

nwinp Upon a successful return, *nwinp* will contain the number of DMA windows for this object.

INTERFACE LEVEL

Solaris DDI specific (Solaris DDI).

DESCRIPTION

`ddi_dma_numwin()` returns the number of DMA windows for a DMA object if partial resource allocation was permitted.

RETURN VALUES

`ddi_dma_numwin()` returns:

`DDI_SUCCESS` Successfully filled in the number of DMA windows.

`DDI_FAILURE` DMA windows are not activated.

CONTEXT

`ddi_dma_numwin()` can be called from user, kernel, or interrupt context.

SEE ALSO

`ddi_dma_addr_bind_handle`(9F), `ddi_dma_alloc_handle`(9F), `ddi_dma_buf_bind_handle`(9F), `ddi_dma_unbind_handle`(9F)

Writing Device Drivers

NAME

ddi_dma_segtocookie – convert a DMA segment to a DMA address cookie

SYNOPSIS

```
#include <sys/ddi.h>
#include <sys/sunddi.h>
```

int **ddi_dma_segtocookie**(ddi_dma_seg_t *seg*, off_t **offp*, off_t **lenp*, ddi_dma_cookie_t **cookiep*);

PARAMETERS

seg	A DMA segment.
offp	A pointer to an `off_t`. Upon a successful return, it is filled in with the offset. This segment is addressing within the object.
lenp	The byte length. This segment is addressing within the object.
cookiep	A pointer to a DMA cookie (see `ddi_dma_cookie`(9S)).

INTERFACE LEVEL

Solaris DDI specific (Solaris DDI).

DESCRIPTION

`ddi_dma_segtocookie()` takes a DMA segment and fills in the cookie pointed to by *cookiep* with the appropriate address, length, and bus type to be used to program the DMA engine. `ddi_dma_segtocookie()` also fills in **offp* and **lenp*, which specify the range within the object.

RETURN VALUES

`ddi_dma_segtocookie()` returns:

`DDI_SUCCESS`	Successfully filled in all values.
`DDI_FAILURE`	Failed to successfully fill in all values.

CONTEXT

`ddi_dma_segtocookie()` can be called from user or interrupt context.

EXAMPLES

EXAMPLE 1 `ddi_dma_segtocookie()` example

```
for (win = NULL; (retw = ddi_dma_nextwin(handle, win, &nwin)) !=
    DDI_DMA_DONE; win = nwin) {
    if (retw != DDI_SUCCESS) {
        /* do error handling */
    } else {
        for (seg = NULL; (rets = ddi_dma_nextseg(nwin, seg, &nseg)) !=
            DDI_DMA_DONE; seg = nseg) {
            if (rets != DDI_SUCCESS) {

                /* do error handling */
            } else {
                ddi_dma_segtocookie(nseg, &off, &len, &cookie);

                /* program DMA engine */
            }
        }
    }
}
```

SEE ALSO

`ddi_dma_nextseg`(9F), `ddi_dma_nextwin`(9F), `ddi_dma_sync`(9F), `ddi_dma_cookie`(9S)

NAME

ddi_dma_set_sbus64 – allow 64–bit transfers on SBus

SYNOPSIS

```
#include <sys/ddi.h>
#include <sys/sunddi.h>

int ddi_dma_set_sbus64(ddi_dma_handle_t handle, uint_t burstsizes);
```

INTERFACE LEVEL

Solaris DDI specific (Solaris DDI).

PARAMETERS

handle The handle filled in by a call to `ddi_dma_alloc_handle`(9F).

burstsizes The possible burst sizes the device's DMA engine can accept in 64–bit mode.

DESCRIPTION

`ddi_dma_set_sbus64()` informs the system that the device wishes to perform 64–bit data transfers on the SBus. The driver must first allocate a DMA handle using `ddi_dma_alloc_handle`(9F) with a `ddi_dma_attr`(9S) structure describing the DMA attributes for a 32–bit transfer mode.

burstsizes describes the possible burst sizes the device's DMA engine can accept in 64–bit mode. It may be distinct from the burst sizes for 32–bit mode set in the `ddi_dma_attr`(9S) structure. The system will activate 64–bit SBus transfers if the SBus supports them. Otherwise, the SBus will operate in 32–bit mode.

After DMA resources have been allocated (see `ddi_dma_addr_bind_handle`(9F) or `ddi_dma_buf_bind_handle`(9F)), the driver should retrieve the available burst sizes by calling `ddi_dma_burstsizes`(9F). This function will return the burst sizes in 64–bit mode if the system was able to activate 64–bit transfers. Otherwise burst sizes will be returned in 32–bit mode.

RETURN VALUES

`ddi_dma_set_sbus64()` returns:

`DDI_SUCCESS` Successfully set the SBus to 64–bit mode.

`DDI_FAILURE` 64–bit mode could not be set.

CONTEXT

`ddi_dma_set_sbus64()` can be called from user, kernel, or interrupt context.

ATTRIBUTES

See `attributes`(5) for descriptions of the following attributes:

ATTRIBUTE TYPE	ATTRIBUTE VALUE
Architecture	SBus

SEE ALSO

`attributes`(5), `ddi_dma_addr_bind_handle`(9F), `ddi_dma_alloc_handle`(9F), `ddi_dma_buf_bind_handle`(9F), `ddi_dma_burstsizes`(9F), `ddi_dma_attr`(9S)

NOTES

64–bit SBus mode is activated on a per SBus slot basis. If there are multiple SBus cards in one slot, they all must operate in 64–bit mode or they all must operate in 32–bit mode.

NAME

ddi_dma_setup – setup DMA resources

SYNOPSIS

```
#include <sys/ddi.h>
#include <sys/sunddi.h>

int ddi_dma_setup(dev_info_t *dip, ddi_dma_req_t *dmareqp,
     ddi_dma_handle_t *handlep);
```

INTERFACE LEVEL

Solaris DDI specific (Solaris DDI).

PARAMETERS

dip A pointer to the device's `dev_info` structure.

dmareqp A pointer to a DMA request structure (see `ddi_dma_req`(9S)).

handlep A pointer to a DMA handle to be filled in. See below for a discussion of a handle. If *handlep* is `NULL`, the call to `ddi_dma_setup()` is considered an advisory call, in which case no resources are allocated, but a value indicating the legality and the feasibility of the request is returned.

DESCRIPTION

`ddi_dma_setup()` allocates resources for a memory object such that a device can perform DMA to or from that object.

A call to `ddi_dma_setup()` informs the system that device referred to by *dip* wishes to perform DMA to or from a memory object. The memory object, the device's DMA capabilities, the device driver's policy on whether to wait for resources, are all specified in the `ddi_dma_req` structure pointed to by *dmareqp*.

A successful call to `ddi_dma_setup()` fills in the value pointed to by *handlep*. This is an opaque object called a DMA handle. This handle is then used in subsequent DMA calls, until `ddi_dma_free`(9F) is called.

Again a DMA handle is opaque—drivers may *not* attempt to interpret its value. When a driver wants to enable its DMA engine, it must retrieve the appropriate address to supply to its DMA engine using a call to `ddi_dma_htoc`(9F), which takes a pointer to a DMA handle and returns the appropriate DMA address.

When DMA transfer completes, the driver should free up the the allocated DMA resources by calling `ddi_dma_free()`.

RETURN VALUES

`ddi_dma_setup()` returns:

`DDI_DMA_MAPPED` Successfully allocated resources for the object. In the case of an *advisory* call, this indicates that the request is legal.

`DDI_DMA_PARTIAL_MAP` Successfully allocated resources for a *part* of the object. This is acceptable when partial transfers are allowed using a flag setting in the `ddi_dma_req` structure (see `ddi_dma_req`(9S) and `ddi_dma_movwin`(9F)).

`DDI_DMA_NORESOURCES` When no resources are available.

DDI_DMA_NOMAPPING	The object cannot be reached by the device requesting the resources.
DDI_DMA_TOOBIG	The object is too big and exceeds the available resources. The maximum size varies depending on machine and configuration.

CONTEXT

ddi_dma_setup() can be called from user or interrupt context, except when the dmar_fp member of the ddi_dma_req structure pointed to by *dmareqp* is set to DDI_DMA_SLEEP, in which case it can be called from user context only.

SEE ALSO

ddi_dma_addr_setup(9F), ddi_dma_buf_setup(9F), ddi_dma_free(9F), ddi_dma_htoc(9F), ddi_dma_movwin(9F), ddi_dma_sync(9F), ddi_dma_req(9S)

Writing Device Drivers

NOTES

The construction of the ddi_dma_req structure is complicated. Use of the provided interface functions such as ddi_dma_buf_setup(9F) simplifies this task.

NAME

ddi_dma_sync – synchronize CPU and I/O views of memory

SYNOPSIS

```
#include <sys/ddi.h>
#include <sys/sunddi.h>
```

```
int ddi_dma_sync(ddi_dma_handle_t handle, off_t offset, size_t length,
     uint_t type);
```

INTERFACE LEVEL

Solaris DDI specific (Solaris DDI).

PARAMETERS

handle The *handle* filled in by a call to `ddi_dma_alloc_handle`(9F).

offset The offset into the object described by the *handle*.

length The length, in bytes, of the area to synchronize. When *length* is zero, the entire range starting from *offset* to the end of the object has the requested operation applied to it.

type Indicates the caller's desire about what view of the memory object to synchronize. The possible values are `DDI_DMA_SYNC_FORDEV`, `DDI_DMA_SYNC_FORCPU` and `DDI_DMA_SYNC_FORKERNEL`.

DESCRIPTION

`ddi_dma_sync()` is used to selectively synchronize either a DMA device's or a CPU's view of a memory object that has DMA resources allocated for I/O . This may involve operations such as flushes of CPU or I/O caches, as well as other more complex operations such as stalling until hardware write buffers have drained.

This function need only be called under certain circumstances. When resources are allocated for DMA using `ddi_dma_addr_bind_handle()` or `ddi_dma_buf_bind_handle()`, an implicit `ddi_dma_sync()` is done. When DMA resources are deallocated using `ddi_dma_unbind_handle`(9F), an implicit `ddi_dma_sync()` is done. However, at any time between DMA resource allocation and deallocation, if the memory object has been modified by either the DMA device or a CPU and you wish to ensure that the change is noticed by the party that did*not* do the modifying, a call to `ddi_dma_sync()` is required. This is true independent of any attributes of the memory object including, but not limited to, whether or not the memory was allocated for consistent mode I/O (see `ddi_dma_mem_alloc`(9F)) or whether or not DMA resources have been allocated for consistent mode I/O (see `ddi_dma_addr_bind_handle`(9F) or `ddi_dma_buf_bind_handle`(9F)).

This cannot be stated too strongly. If a consistent view of the memory object must be ensured between the time DMA resources are allocated for the object and the time they are deallocated, you *must* call `ddi_dma_sync()` to ensure that either a CPU or a DMA device has such a consistent view.

What to set `type` to depends on the view you are trying to ensure consistency for. If the memory object is modified by a CPU, and the object is going to be `read` by the DMA engine of the device, use `DDI_DMA_SYNC_FORDEV`. This ensures that the device's DMA engine sees any changes that a CPU has made to the memory object. If the DMA engine for the device has *written* to the memory object, and you are going to *read* (with a CPU) the object (using an extant virtual address mapping that you have to

the memory object), use DDI_DMA_SYNC_FORCPU. This ensures that a CPU's view of the memory object includes any changes made to the object by the device's DMA engine. If you are only interested in the kernel's view (kernel-space part of the CPU's view) you may use DDI_DMA_SYNC_FORKERNEL. This gives a hint to the system—that is, if it is more economical to synchronize the kernel's view only, then do so; otherwise, synchronize for CPU.

RETURN VALUES

ddi_dma_sync() returns:

DDI_SUCCESS	Caches are successfully flushed.
DDI_FAILURE	The address range to be flushed is out of the address range established by ddi_dma_addr_bind_handle(9F) or ddi_dma_buf_bind_handle(9F).

CONTEXT

ddi_dma_sync() can be called from user or interrupt context.

SEE ALSO

ddi_dma_addr_bind_handle(9F), ddi_dma_alloc_handle(9F), ddi_dma_buf_bind_handle(9F), ddi_dma_mem_alloc(9F), ddi_dma_unbind_handle(9F)

Writing Device Drivers

NAME

ddi_dma_unbind_handle – unbinds the address in a DMA handle

SYNOPSIS

```
#include <sys/ddi.h>
#include <sys/sunddi.h>
```

`int` **`ddi_dma_unbind_handle`**`(ddi_dma_handle_t` *handle*`);`

PARAMETERS

handle The DMA handle previously allocated by a call to `ddi_dma_alloc_handle`(9F).

INTERFACE LEVEL

Solaris DDI specific (Solaris DDI).

DESCRIPTION

`ddi_dma_unbind_handle()` frees all DMA resources associated with an existing DMA handle. When a DMA transfer completes, the driver should call `ddi_dma_unbind_handle()` to free system DMA resources established by a call to `ddi_dma_buf_bind_handle`(9F) or `ddi_dma_addr_bind_handle`(9F). `ddi_dma_unbind_handle()` does an implicit `ddi_dma_sync`(9F) making further synchronization steps unnecessary.

RETURN VALUES

`DDI_SUCCESS` on success

`DDI_FAILURE` on failure

CONTEXT

`ddi_dma_unbind_handle()` can be called from user, kernel, or interrupt context.

SEE ALSO

`ddi_dma_addr_bind_handle`(9F), `ddi_dma_alloc_handle`(9F), `ddi_dma_buf_bind_handle`(9F), `ddi_dma_free_handle`(9F), `ddi_dma_sync`(9F)

Writing Device Drivers

NAME

ddi_driver_name – return normalized driver name

SYNOPSIS

```
#include <sys/ddi.h>
#include <sys/sunddi.h>

const char *ddi_driver_name(dev_info_t *devi);
```

INTERFACE LEVEL

Solaris DDI specific (Solaris DDI).

PARAMETERS

`dip` A pointer to the device's `dev_info` structure.

DESCRIPTION

`ddi_driver_name()` returns the normalized driver name. This name is typically derived from the device name property or the device compatible property. If this name is a driver alias, the corresponding driver name is returned.

RETURN VALUES

`ddi_driver_name()` returns the actual name of the driver bound to a device.

CONTEXT

`ddi_driver_name()` can be called from kernel, or interrupt context.

SEE ALSO

`ddi_get_name`(9F)

Writing Device Drivers

WARNINGS

The name returned by `ddi_driver_name()` is read-only.

NAME

ddi_enter_critical, ddi_exit_critical – enter and exit a critical region of control

SYNOPSIS

```
#include <sys/conf.h>
#include <sys/ddi.h>
#include <sys/sunddi.h>

unsigned int ddi_enter_critical(void);

void ddi_exit_critical(unsignedint ddic);
```

INTERFACE LEVEL

Solaris DDI specific (Solaris DDI).

PARAMETERS

ddic The returned value from the call to `ddi_enter_critical()` must be passed to `ddi_exit_critical()`.

DESCRIPTION

Nearly all driver operations can be done without any special synchronization and protection mechanisms beyond those provided by, for example, mutexes (see `mutex`(9F)). However, for certain devices there can exist a very short critical region of code which *must* be allowed to run uninterrupted. The function `ddi_enter_critical()` provides a mechanism by which a driver can ask the system to guarantee to the best of its ability that the current thread of execution will neither be preempted nor interrupted. This stays in effect until a bracketing call to `ddi_exit_critical()` is made (with an argument which was the returned value from `ddi_enter_critical()`).

The driver may not call any functions external to itself in between the time it calls `ddi_enter_critical()` and the time it calls `ddi_exit_critical()`.

RETURN VALUES

`ddi_enter_critical()` returns an opaque unsigned integer which must be used in the subsequent call to `ddi_exit_critical()`.

CONTEXT

This function can be called from user or interrupt context.

WARNINGS

Driver writers should note that in a multiple processor system this function does not temporarily suspend other processors from executing. This function also cannot guarantee to actually block the hardware from doing such things as interrupt acknowledge cycles. What it *can* do is guarantee that the currently executing thread will not be preempted.

Do not write code bracketed by `ddi_enter_critical()` and `ddi_exit_critical()` that can get caught in an infinite loop, as the machine may crash if you do.

SEE ALSO

`mutex`(9F)

Writing Device Drivers

NAME

ddi_ffs, ddi_fls – find first (last) bit set in a long integer

SYNOPSIS

```
#include <sys/conf.h>
#include <sys/ddi.h>
#include <sys/sunddi.h>
```

```
int ddi_ffs(long mask);
```

```
int ddi_fls(long mask);
```

INTERFACE LEVEL

Solaris DDI specific (Solaris DDI).

PARAMETERS

mask A 32-bit argument value to search through.

DESCRIPTION

The function `ddi_ffs()` takes its argument and returns the shift count that the first (least significant) bit set in the argument corresponds to. The function `ddi_fls()` does the same, only it returns the shift count for the last (most significant) bit set in the argument.

RETURN VALUES

`0` No bits are set in mask.

N Bit *N* is the least significant (`ddi_ffs`) or most significant (`ddi_fls`) bit set in mask. Bits are numbered from `1` to `32`, with bit `1` being the least significant bit position and bit `32` the most significant position.

CONTEXT

This function can be called from user or interrupt context.

SEE ALSO

Writing Device Drivers

NAME

ddi_get8, ddi_get16, ddi_get32, ddi_get64, ddi_getb, ddi_getw, ddi_getl, ddi_getll – read data from the mapped memory address, device register or allocated DMA memory address

SYNOPSIS

```
#include <sys/ddi.h>
#include <sys/sunddi.h>
```

```
uint8_t ddi_get8(ddi_acc_handle_t handle, uint8_t *dev_addr);
```

```
uint16_t ddi_get16(ddi_acc_handle_t handle, uint16_t *dev_addr);
```

```
uint32_t ddi_get32(ddi_acc_handle_t handle, uint32_t *dev_addr);
```

```
uint64_t ddi_get64(ddi_acc_handle_t handle, uint64_t *dev_addr);
```

INTERFACE LEVEL

Solaris DDI specific (Solaris DDI).

PARAMETERS

handle The data access handle returned from setup calls, such as `ddi_regs_map_setup`(9F).

dev_addr Base device address.

DESCRIPTION

The `ddi_get8()`, `ddi_get16()`, `ddi_get32()`, and `ddi_get64()` functions read 8 bits, 16 bits, 32 bits and 64 bits of data, respectively, from the device address, *dev_addr*.

Each individual datum will automatically be translated to maintain a consistent view between the host and the device based on the encoded information in the data access handle. The translation may involve byte-swapping if the host and the device have incompatible endian characteristics.

For certain bus types, you can call these DDI functions from a high-interrupt context. These types include ISA, EISA, and SBus buses. See `sysbus`(4), `isa`(4), `eisa`(4), and `sbus`(4) for details. For the PCI bus, you can, under certain conditions, call these DDI functions from a high-interrupt context. See `pci`(4).

RETURN VALUES

These functions return the value read from the mapped address.

CONTEXT

These functions can be called from user, kernel, or interrupt context.

SEE ALSO

`ddi_put8`(9F), `ddi_regs_map_free`(9F), `ddi_regs_map_setup`(9F), `ddi_rep_get8`(9F), `ddi_rep_put8`(9F)

NOTES

The functions described in this manual page previously used symbolic names which specified their data access size; the function names have been changed so they now specify a fixed-width data size. See the following table for the new name equivalents:

Previous Name	New Name
ddi_getb	ddi_get8
ddi_getw	ddi_get16

Previous Name	New Name
ddi_getl	ddi_get32
ddi_getll	ddi_get64

NAME

ddi_get_cred – returns a pointer to the credential structure of the caller

SYNOPSIS

```
#include <sys/types.h>
#include <sys/ddi.h>
#include <sys/sunddi.h>

cred_t *ddi_get_cred(void);
```

INTERFACE LEVEL

Solaris DDI specific (Solaris DDI).

DESCRIPTION

`ddi_get_cred()` returns a pointer to the user credential structure of the caller.

RETURN VALUES

`ddi_get_cred()` returns a pointer to the caller's credential structure.

CONTEXT

`ddi_get_cred()` can be called from user context only.

SEE ALSO

Writing Device Drivers

NAME

ddi_get_devstate – Check device state

SYNOPSIS

```
#include <sys/ddi.h>
#include <sys/sunddi.h>

ddi_devstate_t ddi_get_devstate(dev_info_t *dip);
```

INTERFACE LEVEL

Solaris DDI specific (Solaris DDI)

PARAMETERS

dip Pointer to the device's `dev_info` structure

DESCRIPTION

The `ddi_get_devstate()` function returns a value indicating the state of the device specified by `dip`, as derived from the configuration operations that have been performed on it (or on the bus on which it resides) and any fault reports relating to it.

RETURN VALUES

`DDI_DEVSTATE_OFFLINE`
: The device is offline. In this state, the device driver is not attached, nor will it be attached automatically. The device cannot be used until it is brought online.

`DDI_DEVSTATE_DOWN`
: The device is online but unusable due to a fault.

`DDI_DEVSTATE_QUIESCED`
: The bus on which the device resides has been quiesced. This is not a fault, but no operations on the device should be performed while the bus remains quiesced.

`DDI_DEVSTATE_DEGRADED`
: The device is online but only able to provide a partial or degraded service, due to a fault.

`DDI_DEVSTATE_UP`
: The device is online and fully operational.

CONTEXT

The `ddi_get_devstate()` function may be called from user, kernel, or interrupt context.

NOTES

A device driver should call this function to check its own state at each major entry point, and before committing resources to a requested operation. If a driver discovers that its device is already down, it should perform required cleanup actions and return as soon as possible. If appropriate, it should return an error to its caller, indicating that the device has failed (for example, a driver's `read`(9E) routine would return `EIO`).

Depending on the driver, some non-I/O operations (for example, calls to the driver's `ioctl`(9E) routine) may still succeed; only functions which would require fully accessible and operational hardware will necessarily fail. If the bus on which the device resides is quiesced, the driver may return a value indicating the operation should be retried later (for example, `EAGAIN`). Alternatively, for some classes of device, it may be appropriate for the driver to enqueue the operation and service it once the bus has been unquiesced. Note that not all busses support the quiesce/unquiesce operations, so this value may never be seen by some drivers.

SEE ALSO

`attach`(9E), `ioctl`(9E), `open`(9E), `read`(9E), `strategy`(9E), `write`(9E), `ddi_dev_report_fault`(9F)

NAME

ddi_get_driver_private, ddi_set_driver_private – get or set the address of the device's private data area

SYNOPSIS

```
#include <sys/conf.h>
#include <sys/ddi.h>
#include <sys/sunddi.h>

void ddi_set_driver_private(dev_info_t *dip, caddr_t data);

caddr_t ddi_get_driver_private(dev_info_t *dip);
```

INTERFACE LEVEL

Solaris DDI specific (Solaris DDI).

PARAMETERS

`ddi_get_driver_private()`

dip Pointer to device information structure to get from.

`ddi_set_driver_private()`

dip Pointer to device information structure to set.

data Data area address to set.

DESCRIPTION

`ddi_get_driver_private()` returns the address of the device's private data area from the device information structure pointed to by *dip*.

`ddi_set_driver_private()` sets the address of the device's private data area in the device information structure pointed to by *dip* with the value of *data*.

RETURN VALUES

`ddi_get_driver_private()` returns the contents of `devi_driver_data`. If `ddi_set_driver_private()` has not been previously called with *dip*, an unpredictable value is returned.

CONTEXT

These functions can be called from user or interrupt context.

SEE ALSO

Writing Device Drivers

NAME

ddi_getiminor – get kernel internal minor number from an external dev_t

SYNOPSIS

```
#include <sys/types.h>
#include <sys/mkdev.h>
#include <sys/ddi.h>

minor_t ddi_getiminor(dev_t dev);
```

INTERFACE LEVEL

Solaris DDI specific (Solaris DDI).

PARAMETERS

The following parameters are supported:

dev Device number.

DESCRIPTION

`ddi_getiminor()` extracts the minor number from a device number. This call should be used only for device numbers that have been passed to the kernel from the user space through opaque interfaces such as the contents of `ioctl`(9E) and `putmsg`(2). The device numbers passed in using standard device entry points must continue to be interpreted using the `getminor`(9F) interface. This new interface is used to translate between user visible device numbers and in kernel device numbers. The two numbers may differ in a clustered system.

For certain bus types, you can call this DDI function from a high-interrupt context. These types include ISA, EISA, and SBus buses. See `sysbus`(4), `isa`(4), `eisa`(4), and `sbus`(4) for details.

CONTEXT

`ddi_getiminor()` can be called from user context only.

RETURN VALUES

The minor number or `EMINOR_UNKNOWN` if the minor number of the device is invalid.

SEE ALSO

`getmajor`(9F), `getminor`(9F), `makedevice`(9F)

Writing Device Drivers

WARNINGS

Validity checking is performed. If *dev* is invalid, `EMINOR_UNKNOWN` is returned. This behavior differs from `getminor`(9F).

NAME

ddi_get_instance – get device instance number

SYNOPSIS

```
#include <sys/ddi.h>
#include <sys/sunddi.h>

int ddi_get_instance(dev_info_t *dip);
```

INTERFACE LEVEL

Solaris DDI specific (Solaris DDI).

PARAMETERS

dip Pointer to `dev_info` structure.

DESCRIPTION

`ddi_get_instance()` returns the instance number of the device corresponding to *dip*.

The system assigns an instance number to every device. Instance numbers for devices attached to the same driver are unique. This provides a way for the system and the driver to uniquely identify one or more devices of the same type. The instance number is derived by the system from different properties for different device types in an implementation specific manner.

Once an instance number has been assigned to a device, it will remain the same even across reconfigurations and reboots. Therefore, instance numbers seen by a driver may not appear to be in consecutive order. For example, if device `foo0` has been assigned an instance number of `0` and device `foo1` has been assigned an instance number of `1`, if `foo0` is removed, `foo1` will continue to be associated with instance number `1` (even though `foo1` is now the only device of its type on the system).

RETURN VALUES

`ddi_get_instance()` returns the instance number of the device corresponding to *dip*.

CONTEXT

`ddi_get_instance()` can be called from user or interrupt context.

SEE ALSO

`path_to_inst`(4)

Writing Device Drivers

NAME

ddi_get_lbolt – returns the value of lbolt

SYNOPSIS

```
#include <sys/types.h>
#include <sys/ddi.h>
#include <sys/sunddi.h>

clock_t ddi_get_lbolt(void);
```

INTERFACE LEVEL

Solaris DDI specific (Solaris DDI).

DESCRIPTION

`ddi_get_lbolt()` returns the value of `lbolt` where `lbolt` is an integer that represents the number of clock ticks since the last system reboot. This value is used as a counter or timer inside the system kernel. The tick frequency can be determined by using `drv_usectohz`(9F) which converts microseconds into clock ticks.

RETURN VALUES

`ddi_get_lbolt()` returns the value of`lbolt`.

CONTEXT

This routine can to be called from any context.

SEE ALSO

`ddi_get_time`(9F), `drv_getparm`(9F), `drv_usectohz`(9F)

Writing Device Drivers

STREAMS Programming Guide

NAME

ddi_get_parent – find the parent of a device information structure

SYNOPSIS

```
#include <sys/ddi.h>
#include <sys/sunddi.h>

dev_info_t *ddi_get_parent(dev_info_t *dip);
```

INTERFACE LEVEL

Solaris DDI specific (Solaris DDI).

PARAMETERS

dip Pointer to a device information structure.

DESCRIPTION

`ddi_get_parent()` returns a pointer to the device information structure which is the parent of the one pointed to by *dip*.

RETURN VALUES

`ddi_get_parent()` returns a pointer to a device information structure.

CONTEXT

`ddi_get_parent()` can be called from user or interrupt context.

SEE ALSO

Writing Device Drivers

NAME

ddi_get_pid – returns the process `ID`

SYNOPSIS

```
#include <sys/types.h>
#include <sys/ddi.h>
#include <sys/sunddi.h>

pid_t ddi_get_pid(void);
```

INTERFACE LEVEL

Solaris DDI specific (Solaris DDI).

DESCRIPTION

`ddi_get_pid()` the process `ID` of the current process. This value can be used to allow only a select process to perform a certain operation. It can also be used to determine if a device context belongs to the current process.

RETURN VALUES

`ddi_get_pid()` returns process `ID`.

CONTEXT

This routine can to be called from user context only.

SEE ALSO

`drv_getparm`(9F)

Writing Device Drivers

STREAMS Programming Guide

NAME

ddi_get_time – returns the current time in seconds

SYNOPSIS

```
#include <sys/types.h>
#include <sys/ddi.h>
#include <sys/sunddi.h>

time_t ddi_get_time(void);
```

INTERFACE LEVEL

Solaris DDI specific (Solaris DDI).

DESCRIPTION

`ddi_get_ time()` returns the current time in seconds since 00:00:00 UTC, January 1, 1970. This value can be used to set of wait or expiration intervals.

RETURN VALUES

`ddi_get_time()` returns the time in seconds.

CONTEXT

This routine can to be called from any context.

SEE ALSO

`ddi_get_lbolt`(9F), `drv_getparm`(9F), `drv_usectohz`(9F)

Writing Device Drivers

STREAMS Programming Guide

NAME

ddi_in_panic – determine if system is in panic state

SYNOPSIS

```
#include <sys/ddi.h>
#include <sys/sunddi.h>

int ddi_in_panic(void);
```

INTERFACE LEVEL

Solaris DDI specific (Solaris DDI).

DESCRIPTION

Drivers controlling devices on which the system may dump a kernel core image in the event of a panic may determine if the system is panicing by calling `ddi_in_panic()`.

When the system is panicing, the calls of functions scheduled by `timeout`(9F) and `ddi_trigger_softintr`(9F) will never occur. Neither can `delay`(9F) be relied upon, since it is implemented via `timeout`(9F).

Drivers that need to enforce a time delay such as SCSI bus reset delay time must busy-wait when the system is panicing.

RETURN VALUES

`ddi_in_panic()` returns `1` if the system is in panic, or `0` otherwise.

CONTEXT

`ddi_in_panic()` may be called from any context.

SEE ALSO

`dump`(9E), `delay`(9F), `ddi_trigger_softintr`(9F), `timeout`(9F)

Writing Device Drivers

NAME

ddi_intr_hilevel – indicate interrupt handler type

SYNOPSIS

```
#include <sys/ddi.h>
#include <sys/sunddi.h>
```

```
int ddi_intr_hilevel(dev_info_t *dip, uint_t inumber);
```

INTERFACE LEVEL

Solaris DDI specific (Solaris DDI).

PARAMETERS

dip Pointer to `dev_info` structure.

inumber Interrupt number.

DESCRIPTION

`ddi_intr_hilevel()` returns non-zero if the specified interrupt is a "high level" interrupt.

High level interrupts must be handled without using system services that manipulate thread or process states, because these interrupts are not blocked by the scheduler.

In addition, high level interrupt handlers must take care to do a minimum of work because they are not preemptable.

A typical high level interrupt handler would put data into a circular buffer and schedule a soft interrupt by calling `ddi_trigger_softintr()`. The circular buffer could be protected by using a mutex that was properly initialized for the interrupt handler.

`ddi_intr_hilevel()` can be used before calling `ddi_add_intr()` to decide which type of interrupt handler should be used. Most device drivers are designed with the knowledge that the devices they support will always generate low level interrupts, however some devices, for example those using SBus or VME bus level 6 or 7 interrupts must use this test because on some machines those interrupts are high level (above the scheduler level) and on other machines they are not.

RETURN VALUES

non-zero indicates a high-level interrupt.

CONTEXT

These functions can be called from user or interrupt context.

SEE ALSO

`ddi_add_intr`(9F), `mutex`(9F)

Writing Device Drivers

NAME

ddi_io_get8, ddi_io_get16, ddi_io_get32, ddi_io_getb, ddi_io_getw, ddi_io_getl – read data from the mapped device register in I/O space

SYNOPSIS

```
#include <sys/ddi.h>
#include <sys/sunddi.h>

uint8_t ddi_io_get8(ddi_acc_handle_t handle, uint8_t *dev_addr);

uint16_t ddi_io_get16(ddi_acc_handle_t handle, uint16_t *dev_addr);

uint32_t ddi_io_get32(ddi_acc_handle_t handle, uint32_t *dev_addr);
```

INTERFACE LEVEL

Solaris DDI specific (Solaris DDI).

PARAMETERS

handle Data access handle returned from setup calls, such as `ddi_regs_map_setup`(9F).

dev_addr Device address.

DESCRIPTION

These routines generate a read of various sizes from the device address, *dev_addr*, in I/O space. The `ddi_io_get8()`, `ddi_io_get16()`, and `ddi_io_get32()` functions read 8 bits, 16 bits, and 32 bits of data, respectively, from the device address, *dev_addr*.

Each individual datum will automatically be translated to maintain a consistent view between the host and the device based on the encoded information in the data access handle. The translation may involve byte-swapping if the host and the device have incompatible endian characteristics.

CONTEXT

These functions can be called from user, kernel, or interrupt context.

SEE ALSO

`isa`(4), `ddi_io_put8`(9F), `ddi_io_rep_get8`(9F), `ddi_io_rep_put8`(9F), `ddi_regs_map_free`(9F), `ddi_regs_map_setup`(9F), `ddi_device_acc_attr`(9S)

NOTES

For drivers using these functions, it may not be easy to maintain a single source to support devices with multiple bus versions. For example, devices may offer I/O space in ISA bus (see `isa`(4)) but memory space only in PCI local bus. This is especially true in instruction set architectures such as IA where accesses to the memory and I/O space are different.

The functions described in this manual page previously used symbolic names which specified their data access size; the function names have been changed so they now specify a fixed-width data size. See the following table for the new name equivalents:

Previous Name	New Name
ddi_io_getb	ddi_io_get8
ddi_io_getw	ddi_io_get16

Previous Name	New Name
ddi_io_getl	ddi_io_get32

NAME

ddi_iomin – find minimum alignment and transfer size for DMA

SYNOPSIS

```
#include <sys/conf.h>
#include <sys/ddi.h>
#include <sys/sunddi.h>

int ddi_iomin(dev_info_t *dip, int initial, int streaming);
```

INTERFACE LEVEL

Solaris DDI specific (Solaris DDI).

PARAMETERS

dip A pointer to the device's `dev_info` structure.

initial The initial minimum DMA transfer size in bytes. This may be zero or an appropriate `dlim_minxfer` value for device's `ddi_dma_lim` structure (see `ddi_dma_lim_sparc`(9S) or `ddi_dma_lim_IA`(9S)). This value must be a power of two.

streaming This argument, if non-zero, indicates that the returned value should be modified to account for *streaming* mode accesses (see `ddi_dma_req`(9S) for a discussion of streaming versus non-streaming access mode).

DESCRIPTION

`ddi_iomin()`, finds out the minimum DMA transfer size for the device pointed to by *dip*. This provides a mechanism by which a driver can determine the effects of underlying caches as well as intervening bus adapters on the granularity of a DMA transfer.

RETURN VALUES

`ddi_iomin()` returns the minimum DMA transfer size for the calling device, or it returns zero, which means that you cannot get there from here.

CONTEXT

This function can be called from user or interrupt context.

SEE ALSO

`ddi_dma_devalign`(9F), `ddi_dma_setup`(9F), `ddi_dma_sync`(9F), `ddi_dma_lim_sparc`(9S), `ddi_dma_lim_IA`(9S), `ddi_dma_req`(9S)

Writing Device Drivers

NAME

ddi_iopb_alloc, ddi_iopb_free – allocate and free non-sequentially accessed memory

SYNOPSIS

```
#include <sys/ddi.h>
#include <sys/sunddi.h>
```

```
int ddi_iopb_alloc(dev_info_t *dip, ddi_dma_lim_t *limits, uint_t
     length, caddr_t *iopbp);
```

```
void ddi_iopb_free(caddr_t iopb);
```

INTERFACE LEVEL

Solaris DDI specific (Solaris DDI).

PARAMETERS

ddi_iopb_alloc()

dip A pointer to the device's `dev_info` structure.

limits A pointer to a DMA limits structure for this device (see `ddi_dma_lim_sparc`(9S) or `ddi_dma_lim_IA`(9S)). If this pointer is `NULL`, a default set of DMA limits is assumed.

length The length in bytes of the desired allocation.

iopbp A pointer to a `caddr_t`. On a successful return, **iopbp* points to the allocated storage.

ddi_iopb_free()

iopb The *iopb* returned from a successful call to `ddi_iopb_alloc()`.

DESCRIPTION

`ddi_iopb_alloc()` allocates memory for DMA transfers and should be used if the device accesses memory in a non-sequential fashion, or if synchronization steps using `ddi_dma_sync`(9F) should be as lightweight as possible, due to frequent use on small objects. This type of access is commonly known as *consistent* access. The allocation will obey the alignment and padding constraints as specified in the *limits* argument and other limits imposed by the system.

Note that you still must use DMA resource allocation functions (see `ddi_dma_setup`(9F)) to establish DMA resources for the memory allocated using `ddi_iopb_alloc()`.

In order to make the view of a memory object shared between a CPU and a DMA device consistent, explicit synchronization steps using `ddi_dma_sync`(9F) or `ddi_dma_free`(9F) are still required. The DMA resources will be allocated so that these synchronization steps are as efficient as possible.

`ddi_iopb_free()` frees up memory allocated by `ddi_iopb_alloc()`.

RETURN VALUES

`ddi_iopb_alloc()` returns:

`DDI_SUCCESS` Memory successfully allocated.

`DDI_FAILURE` Allocation failed.

CONTEXT

These functions can be called from user or interrupt context.

SEE ALSO `ddi_dma_free`(9F), `ddi_dma_setup`(9F), `ddi_dma_sync`(9F), `ddi_mem_alloc`(9F), `ddi_dma_lim_sparc`(9S), `ddi_dma_lim_x86`(9S), `ddi_dma_req`(9S)

Writing Device Drivers

NOTES This function uses scarce system resources. Use it selectively.

NAME

ddi_io_put8, ddi_io_put16, ddi_io_put32, ddi_io_putw, ddi_io_putl, ddi_io_putb – write data to the mapped device register in I/O space

SYNOPSIS

```
#include <sys/ddi.h>
#include <sys/sunddi.h>
```

```
void ddi_io_put8(ddi_acc_handle_t handle, uint8_t *dev_addr, uint8_t
     value);
```

```
void ddi_io_put16(ddi_acc_handle_t handle, uint16_t *dev_addr,
     uint16_t value);
```

```
void ddi_io_put32(ddi_acc_handle_t handle, uint32_t
     *dev_addr, uint32_t value);
```

INTERFACE LEVEL

Solaris DDI specific (Solaris DDI).

PARAMETERS

handle Data access handle returned from setup calls, such as `ddi_regs_map_setup`(9F).

dev_addr Base device address.

value Data to be written to the device.

DESCRIPTION

These routines generate a write of various sizes to the device address, *dev_addr*, in I/O space. The `ddi_io_put8()`, `ddi_io_put16()`, and `ddi_io_put32()` functions write 8 bits, 16 bits, and 32 bits of data, respectively, to the device address, *dev_addr*.

Each individual datum will automatically be translated to maintain a consistent view between the host and the device based on the encoded information in the data access handle. The translation may involve byte-swapping if the host and the device have incompatible endian characteristics.

CONTEXT

These functions can be called from user, kernel, or interrupt context.

SEE ALSO

`isa`(4), `ddi_io_get8`(9F), `ddi_io_rep_get8`(9F), `ddi_io_rep_put8`(9F), `ddi_regs_map_setup`(9F), `ddi_device_acc_attr`(9S)

NOTES

For drivers using these functions, it may not be easy to maintain a single source to support devices with multiple bus versions. For example, devices may offer I/O space in ISA bus (see `isa`(4)) but memory space only in PCI local bus. This is especially true in instruction set architectures such as IA where accesses to the memory and I/O space are different.

The functions described in this manual page previously used symbolic names which specified their data access size; the function names have been changed so they now specify a fixed-width data size. See the following table for the new name equivalents:

Previous Name	New Name
ddi_io_putb	ddi_io_put8

Previous Name	New Name
ddi_io_putw	ddi_io_put16
ddi_io_putl	ddi_io_put32

NAME

ddi_io_rep_get8, ddi_io_rep_get16, ddi_io_rep_get32, ddi_io_rep_getw, ddi_io_rep_getb, ddi_io_rep_getl – read multiple data from the mapped device register in I/O space

SYNOPSIS

```
#include <sys/ddi.h>
#include <sys/sunddi.h>
```

```
void ddi_io_rep_get8(ddi_acc_handle_t handle, uint8_t *host_addr,
     uint8_t *dev_addr,, size_t repcount);
```

```
void ddi_io_rep_get16(ddi_acc_handle_t handle, uint16_t *host_addr,
     uint16_t *dev_addr,, size_t repcount);
```

```
void ddi_io_rep_get32(ddi_acc_handle_t handle, uint32_t *host_addr,
     uint32_t *dev_addr,, size_t repcount);
```

INTERFACE LEVEL

Solaris DDI specific (Solaris DDI).

PARAMETERS

handle The data access handle returned from setup calls, such as `ddi_regs_map_setup`(9F).

host_addr Base host address.

dev_addr Base device address.

repcount Number of data accesses to perform.

DESCRIPTION

These routines generate multiple reads from the device address, *dev_addr*, in I/O space. *repcount* data is copied from the device address, *dev_addr*, to the host address, *host_addr*. For each input datum, the `ddi_io_rep_get8()`, `ddi_io_rep_get16()`, and `ddi_io_rep_get32()` functions read 8 bits, 16 bits, and 32 bits of data, respectively, from the device address. *host_addr* must be aligned to the datum boundary described by the function.

Each individual datum will automatically be translated to maintain a consistent view between the host and the device based on the encoded information in the data access handle. The translation may involve byte-swapping if the host and the device have incompatible endian characteristics.

CONTEXT

These functions can be called from user, kernel, or interrupt context.

SEE ALSO

`isa`(4), `ddi_io_get8`(9F), `ddi_io_put8`(9F), `ddi_io_rep_put8`(9F), `ddi_regs_map_free`(9F), `ddi_regs_map_setup`(9F), `ddi_device_acc_attr`(9S)

NOTES

For drivers using these functions, it may not be easy to maintain a single source to support devices with multiple bus versions. For example, devices may offer I/O space in ISA bus (see `isa`(4)) but memory space only in PCI local bus. This is especially true in instruction set architectures such as IA where accesses to the memory and I/O space are different.

The functions described in this manual page previously used symbolic names which specified their data access size; the function names have been changed so they now specify a fixed-width data size. See the following table for the new name equivalents:

Previous Name	New Name
ddi_io_rep_getb	ddi_io_rep_get8
ddi_io_rep_getw	ddi_io_rep_get16
ddi_io_rep_getl	ddi_io_rep_get32

NAME

ddi_io_rep_put8, ddi_io_rep_put16, ddi_io_rep_put32, ddi_io_rep_putw, ddi_io_rep_putl, ddi_io_rep_putb – write multiple data to the mapped device register in I/O space

SYNOPSIS

```
#include <sys/ddi.h>
#include <sys/sunddi.h>

void ddi_io_rep_put8(ddi_acc_handle_t handle, uint8_t *host_addr,
     uin8_t *dev_addr, size_t repcount);

void ddi_io_rep_put16(ddi_acc_handle_t handle, uint16_t *host_addr,
     uin16_t *dev_addr, size_t repcount);

void ddi_io_rep_put32(ddi_acc_handle_t handle, uint32_t *host_addr,
     uin32_t *dev_addr, size_t repcount);
```

INTERFACE LEVEL

Solaris DDI specific (Solaris DDI).

PARAMETERS

handle Data access handle returned from setup calls, such as `ddi_regs_map_setup`(9F).

host_addr Base host address.

dev_addr Base device address.

repcount Number of data accesses to perform.

DESCRIPTION

These routines generate multiple writes to the device address, *dev_address*, in I/O space. *repcount* data is copied from the host address, *host_addr*, to the device address, *dev_addr*. For each input datum, the `ddi_io_rep_put8()`, `ddi_io_rep_put16()`, and `ddi_io_rep_put32()` functions write 8 bits, 16 bits, and 32 bits of data, respectively, to the device address. *host_addr* must be aligned to the datum boundary described by the function.

Each individual datum will automatically be translated to maintain a consistent view between the host and the device based on the encoded information in the data access handle. The translation may involve byte-swapping if the host and the device have incompatible endian characteristics.

CONTEXT

These functions can be called from user, kernel, or interrupt context.

SEE ALSO

`isa`(4), `ddi_io_get8`(9F), `ddi_io_put8`(9F), `ddi_io_rep_get8`(9F), `ddi_regs_map_setup`(9F), `ddi_device_acc_attr`(9S)

NOTES

For drivers using these functions, it may not be easy to maintain a single source to support devices with multiple bus versions. For example, devices may offer I/O space in ISA bus (see `isa`(4)) but memory space only in PCI local bus. This is especially true in instruction set architectures such as IA where accesses to the memory and I/O space are different.

The functions described in this manual page previously used symbolic names which specified their data access size; the function names have been changed so they now specify a fixed-width data size. See the following table for the new name equivalents:

Previous Name	New Name
ddi_io_rep_putb	ddi_io_rep_put8
ddi_io_rep_putw	ddi_io_rep_put16
ddi_io_rep_putl	ddi_io_rep_put32

NAME

ddi_mapdev – create driver-controlled mapping of device

SYNOPSIS

```
#include <sys/ddi.h>
#include <sys/sunddi.h>

int ddi_mapdev(dev_t dev, off_t offset, struct as *asp, caddr_t *addrp,
     off_t len, uint_t prot, uint_t maxprot, uint_t flags, cred_t *cred,
     struct ddi_mapdev_ctl *ctl, ddi_mapdev_handle_t *handlep, void
     *devprivate);
```

INTERFACE LEVEL

Solaris DDI specific (Solaris DDI).

PARAMETERS

dev The device whose memory is to be mapped.

offset The offset within device memory at which the mapping begins.

as An opaque pointer to the user address space into which the device memory should be mapped.

addrp Pointer to the starting address within the user address space to which the device memory should be mapped.

len Length (in bytes) of the memory to be mapped.

prot A bit field that specifies the protections.

maxprot Maximum protection flag possible for attempted mapping.

flags Flags indicating type of mapping.

cred Pointer to the user credentials structure.

ctl A pointer to a `ddi_mapdev_ctl`(9S) structure. The structure contains pointers to device driver-supplied functions that manage events on the device mapping.

handlep An opaque pointer to a device mapping handle. A handle to the new device mapping is generated and placed into the location pointed to by **handlep*. If the call fails, the value of **handlep* is undefined.

devprivate Driver private mapping data. This value is passed into each mapping call back routine.

DESCRIPTION

Future releases of Solaris will provide this function for binary and source compatibility. However, for increased functionality, use `devmap_setup`(9F) instead. See `devmap_setup`(9F) for deatils.

`ddi_mapdev`( ) sets up user mappings to device space. The driver is notified of user events on the mappings via the entry points defined by *ctl*.

The user events that the driver is notified of are:

access User has accessed an address in the mapping that has no translations.

duplication User has duplicated the mapping. Mappings are duplicated when the process calls `fork`(2).

unmapping User has called `munmap`(2) on the mapping or is exiting.

See `mapdev_access`(9E), `mapdev_dup`(9E), and `mapdev_free`(9E) for details on these entry points.

The range to be mapped, defined by *offset* and *len* must be valid.

The arguments *dev*, *asp*, *addrp*, *len*, *prot*, *maxprot*, *flags*, and *cred* are provided by the `segmap`(9E) entry point and should not be modified. See `segmap`(9E) for a description of these arguments. Unlike `ddi_segmap`(9F), the drivers `mmap`(9E) entry point is not called to verify the range to be mapped.

With the handle, device drivers can use `ddi_mapdev_intercept`(9F) and `ddi_mapdev_nointercept`(9F) to inform the system of whether or not they are interested in being notified when the user process accesses the mapping. By default, user accesses to newly created mappings will generate a call to the `mapdev_access()` entry point. The driver is always notified of duplications and unmaps.

The device may also use the handle to assign certain characteristics to the mapping. See `ddi_mapdev_set_device_acc_attr`(9F) for details.

The device driver can use these interfaces to implement a device context and control user accesses to the device space. `ddi_mapdev()` is typically called from the `segmap`(9E) entry point.

RETURN VALUES

`ddi_mapdev()` returns zero on success and non-zero on failure. The return value from `ddi_mapdev()` should be used as the return value for the drivers `segmap()` entry point.

CONTEXT

This routine can be called from user or kernel context only.

SEE ALSO

`fork`(2), `mmap`(2), `munmap`(2), `mapdev_access`(9E), `mapdev_dup`(9E), `mapdev_free`(9E), `mmap`(9E), `segmap`(9E), `ddi_mapdev_intercept`(9F), `ddi_mapdev_nointercept`(9F), `ddi_mapdev_set_device_acc_attr`(9F), `ddi_segmap`(9F), `ddi_mapdev_ctl`(9S)

Writing Device Drivers

NOTES

Only mappings of type `MAP_PRIVATE` should be used with `ddi_mapdev()`.

NAME

ddi_mapdev_intercept, ddi_mapdev_nointercept – control driver notification of user accesses

SYNOPSIS

```
#include <sys/sunddi.h>

int ddi_mapdev_intercept(ddi_mapdev_handle_t handle, off_t offset,
     off_t len);

int ddi_mapdev_nointercept(ddi_mapdev_handle_t handle, off_t offset,
     off_t len);
```

INTERFACE LEVEL

Solaris DDI specific (Solaris DDI).

PARAMETERS

handle An opaque pointer to a device mapping handle.

offset An offset in bytes within device memory.

len Length in bytes.

DESCRIPTION

Future releases of Solaris will provide these functions for binary and source compatibility. However, for increased functionality, use devmap_load(9F) or devmap_unload(9F) instead. See devmap_load(9F) and devmap_unload(9F) for details.

The ddi_mapdev_intercept() and ddi_mapdev_nointercept() functions control whether or not user accesses to device mappings created by ddi_mapdev(9F) in the specified range will generate calls to the mapdev_access(9E) entry point. ddi_mapdev_intercept() tells the system to intercept the user access and notify the driver to invalidate the mapping translations. ddi_mapdev_nointercept() tells the system to not intercept the user access and allow it to proceed by validating the mapping translations.

For both routines, the range to be affected is defined by the *offset* and *len* arguments. Requests affect the entire page containing the *offset* and all pages up to and including the page containing the last byte as indicated by *offset* + *len*.

Supplying a value of 0 for the *len* argument affects all addresses from the *offset* to the end of the mapping. Supplying a value of 0 for the *offset* argument and a value of 0 for *len* argument affect all addresses in the mapping.

To manage a device context, a device driver would call ddi_mapdev_intercept() on the context about to be switched out, switch contexts, and then call ddi_mapdev_nointercept() on the context switched in.

RETURN VALUES

ddi_mapdev_intercept() and ddi_mapdev_nointercept() return the following values:

0 Successful completion.

Non-zero An error occurred.

EXAMPLES

EXAMPLE 1 managing a device context that is one page in length

The following shows an example of managing a device context that is one page in length.

```
ddi_mapdev_handle_t cur_hdl;
static int
xxmapdev_access(ddi_mapdev_handle_t handle, void *devprivate,
    off_t offset)
{
    int err;
    /* enable access callbacks for the current mapping */
    if (cur_hdl != NULL) {
        if ((err = ddi_mapdev_intercept(cur_hdl, offset, 0)) != 0)
            return (err);
    }
    /* Switch device context - device dependent*/
    ...
    /* Make handle the new current mapping */
    cur_hdl = handle;
    /*
     * Disable callbacks and complete the access for the
     * mapping that generated this callback.
     */
    return (ddi_mapdev_nointercept(handle, offset, 0));
}
```

CONTEXT

These routines can be called from user or kernel context only.

SEE ALSO

`mapdev_access`(9E), `ddi_mapdev`(9F)

Writing Device Drivers

NAME

ddi_mapdev_set_device_acc_attr – set the device attributes for the mapping

SYNOPSIS

```
#include <sys/ddi.h>
#include <sys/sunddi.h>

int ddi_mapdev_set_device_acc_attr(ddi_mapdev_handle_t
     mapping_handle, off_t offset, off_t len, ddi_device_acc_attr_t
     *accattrp, uint_t rnumber);
```

INTERFACE LEVEL

Solaris DDI specific (Solaris DDI).

PARAMETERS

mapping_handle A pointer to a device mapping handle.

offset The offset within device memory to which the device access attributes structure applies.

len Length (in bytes) of the memory to which the device access attributes structure applies.

**accattrp* Pointer to a `ddi_device_acc_attr`(9S) structure. Contains the device access attributes to be applied to this range of memory.

rnumber Index number to the register address space set.

DESCRIPTION

Future releases of Solaris will provide this function for binary and source compatibility. However, for increased functionality, use `devmap`(9E) instead. See `devmap`(9E) for details.

The `ddi_mapdev_set_device_acc_attr()` function assigns device access attributes to a range of device memory in the register set given by *rnumber*.

**accattrp* defines the device access attributes. See `ddi_device_acc_attr`(9S) for more details.

mapping_handle is a mapping handle returned from a call to `ddi_mapdev`(9F).

The range to be affected is defined by the *offset* and *len* arguments. Requests affect the entire page containing the *offset* and all pages up to and including the page containing the last byte as indicated by *offset+len*. Supplying a value of `0` for the *len* argument affects all addresses from the *offset* to the end of the mapping. Supplying a value of `0` for the *offset* argument and a value of `0` for the *len* argument affect all addresses in the mapping.

RETURN VALUES

The `ddi_mapdev_set_device_acc_attr()` function returns the following values:

`DDI_SUCCESS` The attributes were successfully set.

`DDI_FAILURE` It is not possible to set these attributes for this mapping handle.

CONTEXT

This routine can be called from user or kernel context only.

SEE ALSO `segmap`(9E), `ddi_mapdev`(9F), `ddi_segmap_setup`(9F), `ddi_device_acc_attr`(9S)

Writing Device Drivers

NAME

ddi_map_regs, ddi_unmap_regs – map or unmap registers

SYNOPSIS

```
#include <sys/conf.h>
#include <sys/ddi.h>
#include <sys/sunddi.h>
```

```
int ddi_map_regs(dev_info_t *dip, uint_t rnumber, caddr_t *kaddrp,
     off_t offset, off_t len);
```

```
void ddi_unmap_regs(dev_info_t *dip, uint_t rnumber, caddr_t
     *kaddrp, off_t offset, off_t len);
```

PARAMETERS

ddi_map_regs()

dip	Pointer to the device's dev_info structure.
rnumber	Register set number.
kaddrp	Pointer to the base kernel address of the mapped region (set on return).
offset	Offset into register space.
len	Length to be mapped.

ddi_unmap_regs()

dip	Pointer to the device's dev_info structure.
rnumber	Register set number.
kaddrp	Pointer to the base kernel address of the region to be unmapped.
offset	Offset into register space.
len	Length to be unmapped.

INTERFACE LEVEL

Solaris DDI specific (Solaris DDI).

DESCRIPTION

`ddi_map_regs()` maps in the register set given by *rnumber*. The register number determines which register set will be mapped if more than one exists. The base kernel virtual address of the mapped register set is returned in *kaddrp*. *offset* specifies an offset into the register space to start from and *len* indicates the size of the area to be mapped. If *len* is non-zero, it overrides the length given in the register set description. See the discussion of the `reg` property in `sbus`(4) and for more information on register set descriptions. If *len* and *offset* are 0, the entire space is mapped.

`ddi_unmap_regs()` undoes mappings set up by `ddi_map_regs()`. This is provided for drivers preparing to detach themselves from the system, allowing them to release allocated mappings. Mappings must be released in the same way they were mapped (a call to `ddi_unmap_regs()` must correspond to a previous call to `ddi_map_regs()`). Releasing portions of previous mappings is not allowed. *rnumber* determines which register set will be unmapped if more than one exists. The *kaddrp*, *offset* and *len* specify the area to be unmapped. *kaddrp* is a pointer to the address returned from `ddi_map_regs()`; *offset* and *len* should match what `ddi_map_regs()` was called with.

RETURN VALUES

`ddi_map_regs()` returns:

`DDI_SUCCESS` on success.

CONTEXT

These functions can be called from user or interrupt context.

SEE ALSO

`sbus`(4)

Writing Device Drivers

NAME

ddi_mem_alloc, ddi_mem_free – allocate and free sequentially accessed memory

SYNOPSIS

```
#include <sys/ddi.h>
#include <sys/sunddi.h>

int ddi_mem_alloc(dev_info_t *dip, ddi_dma_lim_t *limits, uint_t
     length, uint_t flags, caddr_t *kaddrp, uint_t *real_length);

void ddi_mem_free(caddr_t kaddr);
```

INTERFACE LEVEL

Solaris DDI specific (Solaris DDI).

PARAMETERS

ddi_mem_alloc()

dip	A pointer to the device's `dev_info` structure.
limits	A pointer to a DMA limits structure for this device (see `ddi_dma_lim_sparc`(9S) or `ddi_dma_lim_IA`(9S)). If this pointer is `NULL`, a default set of DMA limits is assumed.
length	The length in bytes of the desired allocation.
flags	The possible flags `1` and `0` are taken to mean, respectively, wait until memory is available, or do not wait.
kaddrp	On a successful return, **kaddrp* points to the allocated memory.
real_length	The length in bytes that was allocated. Alignment and padding requirements may cause `ddi_mem_alloc()` to allocate more memory than requested in *length*.

ddi_mem_free()

kaddr	The memory returned from a successful call to `ddi_mem_alloc()`.

DESCRIPTION

`ddi_mem_alloc()` allocates memory for DMA transfers and should be used if the device is performing sequential, unidirectional, block-sized and block-aligned transfers to or from memory. This type of access is commonly known as *streaming* access. The allocation will obey the alignment and padding constraints as specified by the *limits* argument and other limits imposed by the system.

Note that you must still use DMA resource allocation functions (see `ddi_dma_setup`(9F)) to establish DMA resources for the memory allocated using `ddi_mem_alloc()`. `ddi_mem_alloc()` returns the actual size of the allocated memory object. Because of padding and alignment requirements, the actual size might be larger than the requested size. `ddi_dma_setup`(9F) requires the actual length.

In order to make the view of a memory object shared between a CPU and a DMA device consistent, explicit synchronization steps using `ddi_dma_sync`(9F) or `ddi_dma_free`(9F) are required.

`ddi_mem_free()` frees up memory allocated by `ddi_mem_alloc()`.

RETURN VALUES

`ddi_mem_alloc()` returns:

`DDI_SUCCESS`	Memory successfully allocated.
`DDI_FAILURE`	Allocation failed.

CONTEXT

`ddi_mem_alloc()` can be called from user or interrupt context, except when *flags* is set to `1`, in which case it can be called from user context only.

SEE ALSO

`ddi_dma_free`(9F), `ddi_dma_setup`(9F), `ddi_dma_sync`(9F), `ddi_iopb_alloc`(9F), `ddi_dma_lim_sparc`(9S), `ddi_dma_lim_x86`(9S), `ddi_dma_req`(9S)

Writing Device Drivers

NAME

ddi_mem_get8, ddi_mem_get16, ddi_mem_get32, ddi_mem_get64, ddi_mem_getw, ddi_mem_getl, ddi_mem_getll, ddi_mem_getb – read data from mapped device in the memory space or allocated DMA memory

SYNOPSIS

```
#include <sys/ddi.h>
#include <sys/sunddi.h>

uint8_t ddi_mem_get8(ddi_acc_handle_t handle, uint8_t *dev_addr);

uint16_t ddi_mem_get16(ddi_acc_handle_t handle, uint16_t *
     dev_addr);

uint32_t ddi_mem_get32(ddi_acc_handle_t handle, uint32_t *dev_addr);

uint64_t ddi_mem_get64(ddi_acc_handle_t handle, uint64_t *dev_addr);
```

INTERFACE LEVEL

Solaris DDI specific (Solaris DDI).

PARAMETERS

handle The data access handle returned from setup calls, such as `ddi_regs_map_setup`(9F).

dev_addr Base device address.

DESCRIPTION

These routines generate a read of various sizes from memory space or allocated DMA memory. The `ddi_mem_get8()`, `ddi_mem_get16()`, `ddi_mem_get32()`, and `ddi_mem_get64()` functions read 8 bits, 16 bits, 32 bits and 64 bits of data, respectively, from the device address, *dev_addr*, in memory space.

Each individual datum will automatically be translated to maintain a consistent view between the host and the device based on the encoded information in the data access handle. The translation may involve byte-swapping if the host and the device have incompatible endian characteristics.

CONTEXT

These functions can be called from user, kernel, or interrupt context.

SEE ALSO

`ddi_mem_put8`(9F), `ddi_mem_rep_get8`(9F), `ddi_mem_rep_put8`(9F), `ddi_regs_map_setup`(9F), `ddi_device_acc_attr`(9S)

NOTES

The functions described in this manual page previously used symbolic names which specified their data access size; the function names have been changed so they now specify a fixed-width data size. See the following table for the new name equivalents:

Previous Name	New Name
ddi_mem_getb	ddi_mem_get8
ddi_mem_getw	ddi_mem_get16
ddi_mem_getl	ddi_mem_get32
ddi_mem_getll	ddi_mem_get64

NAME

ddi_mem_put8, ddi_mem_put16, ddi_mem_put32, ddi_mem_put64, ddi_mem_putb, ddi_mem_putw, ddi_mem_putl, ddi_mem_putll – write data to mapped device in the memory space or allocated DMA memory

SYNOPSIS

```
#include <sys/ddi.h>
#include <sys/sunddi.h>

void ddi_mem_put8(ddi_acc_handle_t handle, uint8_t *dev_addr,
     uint8_t value);

void ddi_mem_put16(ddi_acc_handle_t handle, uint16_t *dev_addr,
     uint16_t value);

void ddi_mem_put32(ddi_acc_handle_t handle, uint32_t *dev_addr,
     uint32_t value);

void ddi_mem_put64(ddi_acc_handle_t handle, uint64_t *dev_addr,
     uint64_t value);
```

PARAMETERS

handle The data access handle returned from setup calls, such as `ddi_regs_map_setup`(9F).

dev_addr Base device address.

value The data to be written to the device.

INTERFACE LEVEL

Solaris DDI specific (Solaris DDI).

DESCRIPTION

These routines generate a write of various sizes to memory space or allocated DMA memory. The `ddi_mem_put8()`, `ddi_mem_put16()`, `ddi_mem_put32()`, and `ddi_mem_put64()` functions write 8 bits, 16 bits, 32 bits and 64 bits of data, respectively, to the device address, *dev_addr*, in memory space.

Each individual datum will automatically be translated to maintain a consistent view between the host and the device based on the encoded information in the data access handle. The translation may involve byte-swapping if the host and the device have incompatible endian characteristics.

CONTEXT

These functions can be called from user, kernel, or interrupt context.

SEE ALSO

`ddi_mem_get8`(9F), `ddi_mem_rep_get8`(9F), `ddi_regs_map_setup`(9F), `ddi_device_acc_attr`(9S)

NOTES

The functions described in this manual page previously used symbolic names which specified their data access size; the function names have been changed so they now specify a fixed-width data size. See the following table for the new name equivalents:

Previous Name	New Name
ddi_mem_putb	ddi_mem_put8
ddi_mem_putw	ddi_mem_put16

Previous Name	New Name
ddi_mem_putl	ddi_mem_put32
ddi_mem_putll	ddi_mem_put64

NAME

ddi_mem_rep_get8, ddi_mem_rep_get16, ddi_mem_rep_get32, ddi_mem_rep_get64, ddi_mem_rep_getw, ddi_mem_rep_getl, ddi_mem_rep_getll, ddi_mem_rep_getb – read multiple data from mapped device in the memory space or allocated DMA memory

SYNOPSIS

```
#include <sys/ddi.h>
#include <sys/sunddi.h>

void ddi_mem_rep_get8(ddi_acc_handle_t handle, uint8_t *host_addr,
     uint8_t *dev_addr, size_t repcount, uint_t flags);

void ddi_mem_rep_get16(ddi_acc_handle_t handle, uint16_t *host_addr,
     uint16_t *dev_addr, size_t repcount, uint_t flags);

void ddi_mem_rep_get32(ddi_acc_handle_t handle, uint32_t *host_addr,
     uint32_t *dev_addr, size_t repcount, uint_t flags);

void ddi_mem_rep_get64(ddi_acc_handle_t handle, uint64_t *host_addr,
     uint64_t *dev_addr, size_t repcount, uint_t flags);
```

INTERFACE LEVEL

Solaris DDI specific (Solaris DDI).

PARAMETERS

handle The data access handle returned from setup calls, such as `ddi_regs_map_setup`(9F).

host_addr Base host address.

dev_addr Base device address.

repcount Number of data accesses to perform.

flags Device address flags:

- `DDI_DEV_AUTOINCR` Automatically increment the device address, *dev_addr*, during data accesses.
- `DDI_DEV_NO_AUTOINCR` Do not advance the device address, *dev_addr*, during data accesses.

DESCRIPTION

These routines generate multiple reads from memory space or allocated DMA memory. *repcount* data is copied from the device address, *dev_addr*, in memory space to the host address, *host_addr*. For each input datum, the `ddi_mem_rep_get8()`, `ddi_mem_rep_get16()`, `ddi_mem_rep_get32()`, and `ddi_mem_rep_get64()` functions read 8 bits, 16 bits, 32 bits and 64 bits of data, respectively, from the device address, *dev_addr*. *dev_addr* and *host_addr* must be aligned to the datum boundary described by the function.

Each individual datum will automatically be translated to maintain a consistent view between the host and the device based on the encoded information in the data access handle. The translation may involve byte-swapping if the host and the device have incompatible endian characteristics.

When the *flags* argument is set to DDI_DEV_AUTOINCR, these functions will treat the device address, *dev_addr*, as a memory buffer location on the device and increments its address on the next input datum. However, when the *flags* argument is set to DDI_DEV_NO_AUTOINCR, the same device address will be used for every datum access. For example, this flag may be useful when reading from a data register.

CONTEXT

These functions can be called from user, kernel, or interrupt context.

SEE ALSO

ddi_mem_get8(9F), ddi_mem_put8(9F), ddi_mem_rep_put8(9F), ddi_regs_map_setup(9F), ddi_device_acc_attr(9S)

NOTES

The functions described in this manual page previously used symbolic names which specified their data access size; the function names have been changed so they now specify a fixed-width data size. See the following table for the new name equivalents:

Previous Name	New Name
ddi_mem_rep_getb	ddi_mem_rep_get8
ddi_mem_rep_getw	ddi_mem_rep_get16
ddi_mem_rep_getl	ddi_mem_rep_get32
ddi_mem_rep_getll	ddi_mem_rep_get64

NAME

ddi_mem_rep_put8, ddi_mem_rep_put16, ddi_mem_rep_put32, ddi_mem_rep_put64, ddi_mem_rep_putw, ddi_mem_rep_putl, ddi_mem_rep_putll, ddi_mem_rep_putb – write multiple data to mapped device in the memory space or allocated DMA memory

SYNOPSIS

```
#include <sys/ddi.h>
#include <sys/sunddi.h>

void ddi_mem_rep_put8(ddi_acc_handle_t handle, uint8_t *host_addr,
     uint8_t *dev_addr, size_t repcount, uint_t flags);

void ddi_mem_rep_put16(ddi_acc_handle_t handle, uint16_t *host_addr,
     uint16_t *dev_addr, size_t repcount, uint_t flags);

void ddi_mem_rep_put32(ddi_acc_handle_t handle, uint32_t *host_addr,
     uint32_t *dev_addr, size_t repcount, uint_t flags);

void ddi_mem_rep_put64(ddi_acc_handle_t handle, uint64_t *host_addr,
     uint64_t *dev_addr, size_t repcount, uint_t flags);
```

INTERFACE LEVEL

Solaris DDI specific (Solaris DDI).

PARAMETERS

handle The data access handle returned from setup calls, such as `ddi_regs_map_setup`(9F).

host_addr Base host address.

dev_addr Base device address.

repcount Number of data accesses to perform.

flags Device address flags:

`DDI_DEV_AUTOINCR`
: Automatically increment the device address, *dev_addr*, during data accesses.

`DDI_DEV_NO_AUTOINCR`
: Do not advance the device address, *dev_addr*, during data accesses.

DESCRIPTION

These routines generate multiple writes to memory space or allocated DMA memory. *repcount* data is copied from the host address, *host_addr*, to the device address, *dev_addr*, in memory space. For each input datum, the `ddi_mem_rep_put8()`, `ddi_mem_rep_put16()`, `ddi_mem_rep_put32()`, and `ddi_mem_rep_put64()` functions write 8 bits, 16 bits, 32 bits and 64 bits of data, respectively, to the device address. *dev_addr* and *host_addr* must be aligned to the datum boundary described by the function.

Each individual datum will automatically be translated to maintain a consistent view between the host and the device based on the encoded information in the data access handle. The translation may involve byte-swapping if the host and the device have incompatible endian characteristics.

When the *flags* argument is set to DDI_DEV_AUTOINCR, these functions will treat the device address, *dev_addr*, as a memory buffer location on the device and increments its address on the next input datum. However, when the *flags* argument is set to DDI_DEV_NO_AUTOINCR, the same device address will be used for every datum access. For example, this flag may be useful when writing from a data register.

CONTEXT

These functions can be called from user, kernel, or interrupt context.

SEE ALSO

ddi_mem_get8(9F), ddi_mem_put8(9F), ddi_mem_rep_get8(9F), ddi_regs_map_setup(9F), ddi_device_acc_attr(9S)

NOTES

The functions described in this manual page previously used symbolic names which specified their data access size; the function names have been changed so they now specify a fixed-width data size. See the following table for the new name equivalents:

Previous Name	New Name
ddi_mem_rep_putb	ddi_mem_rep_put8
ddi_mem_rep_putw	ddi_mem_rep_put16
ddi_mem_rep_putl	ddi_mem_rep_put32
ddi_mem_rep_putll	ddi_mem_rep_put64

NAME

ddi_mmap_get_model – return data model type of current thread

SYNOPSIS

```
#include <sys/ddi.h>
#include <sys/sunddi.h>

uint_t ddi_mmap_get_model(void););
```

INTERFACE LEVEL

Solaris DDI specific (Solaris DDI).

DESCRIPTION

`ddi_mmap_get_model()` returns the *C* Language Type Model which the current thread expects. `ddi_mmap_get_model()` is used in combination with `ddi_model_convert_from`(9F) in the `mmap`(9E) driver entry point to determine whether there is a data model mismatch between the current thread and the device driver. The device driver might have to adjust the shape of data structures before exporting them to a user thread which supports a different data model.

RETURN VALUES

`DDI_MODEL_ILP32`	Current thread expects 32-bit *(ILP32)* semantics.
`DDI_MODEL_LP64`	Current thread expects 64-bit *(LP64)* semantics.
`DDI_FAILURE`	The `ddi_mmap_get_model()` function was not called from the `mmap`(9E) entry point.

CONTEXT

The `ddi_mmap_get_model()` function can only be called from the `mmap`(9E) driver entry point.

EXAMPLES

EXAMPLE 1 : Using `ddi_mmap_get_model()`

The following is an example of the `mmap`(9E) entry point and how to support 32-bit and 64-bit applications with the same device driver.

```
struct data32 {
        int len;
        caddr32_t addr;
};

struct data {
        int len;
        caddr_t addr;
};
xxmmap(dev_t dev, off_t off, int prot) {
        struct data dtc; /* a local copy for clash resolution */
        struct data *dp = (struct data *)shared_area;

#ifdef  _MULTI_DATAMODEL
        switch (ddi_model_convert_from(ddi_mmap_get_model())) {
        case DDI_MODEL_ILP32:
        {
                struct data32 *da32p;

                da32p = (struct data32 *)shared_area;
                dp = &dtc;
                dp->len = da32p->len;
                dp->address = da32->address;
                break;
```

EXAMPLE 1 : Using `ddi_mmap_get_model()` *(Continued)*

```
        }
        case DDI_MODEL_NONE:
                break;
        }
#endif /* _MULTI_DATAMODEL */
        /* continues along using dp */
       ...
}
```

SEE ALSO

`mmap`(9E), `ddi_model_convert_from`(9F)

Writing Device Drivers

NAME

ddi_model_convert_from – determine data model type mismatch

SYNOPSIS

```
#include <sys/ddi.h>
#include <sys/sunddi.h>
```

uint_t**ddi_model_convert_from**(uint_t *model*);

INTERFACE LEVEL

Solaris DDI specific (Solaris DDI).

PARAMETERS

model The data model type of the current thread.

DESCRIPTION

`ddi_model_convert_from()` is used to determine if the current thread uses a different `C` Language Type Model than the device driver. The 64-bit version of Solaris will require a 64-bit kernel to support both 64-bit and 32-bit user mode programs. The difference between a 32-bit program and a 64-bit program is in its `C` Language Type Model: a 32-bit program is `ILP32` (integer, longs, and pointers are 32-bit) and a 64-bit program is `LP64` (longs and pointers are 64-bit). There are a number of driver entry points such as `ioctl`(9E) and `mmap`(9E) where it is necessary to identify the `C` Language Type Model of the user-mode originator of an kernel event. For example any data which flows between programs and the device driver or vice versa need to be identical in format. A 64-bit device driver may need to modify the format of the data before sending it to a 32-bit application. `ddi_model_convert_from()` is used to determine if data that is passed between the device driver and the application requires reformatting to any non-native data model.

RETURN VALUES

`DDI_MODEL_ILP32`	A conversion to/from `ILP32` is necessary.
`DDI_MODEL_NONE`	No conversion is necessary. Current thread and driver use the same data model.

CONTEXT

`ddi_model_convert_from()` can be called from any context.

EXAMPLES

EXAMPLE 1 : Using `ddi_model_convert_from()` in the `ioctl()` entry point to support both 32-bit and 64-bit applications.

The following is an example how to use `ddi_model_convert_from()` in the `ioctl()` entry point to support both 32-bit and 64-bit applications.

```
struct passargs32 {
        int len;
        caddr32_t addr;
};

struct passargs {
        int len;
        caddr_t addr;
};
xxioctl(dev_t dev, int cmd, intptr_t arg, int mode,
    cred_t *credp, int *rvalp) {
        struct passargs pa;

#ifdef  _MULTI_DATAMODEL
        switch (ddi_model_convert_from(mode & FMODELS)) {
            case DDI_MODEL_ILP32:
```

EXAMPLE 1 : Using `ddi_model_convert_from()` in the `ioctl()` entry point to support both 32-bit and 64-bit applications. *(Continued)*

```
            {
                struct passargs32 pa32;

                ddi_copyin(arg, &pa32, sizeof (struct passargs32), mode);
                pa.len = pa32.len;
                pa.address = pa32.address;
                break;
            }
            case DDI_MODEL_NONE:
                ddi_copyin(arg, &pa, sizeof (struct passargs), mode);
                break;
        }
#else /* _MULTI_DATAMODEL */
        ddi_copyin(arg, &pa, sizeof (struct passargs), mode);
#endif  /* _MULTI_DATAMODEL */

        do_ioctl(&pa);
        . . . .
}
```

SEE ALSO

`ioctl`(9E), `mmap`(9E), `ddi_mmap_get_model`(9F)

Writing Device Drivers

NAME

ddi_node_name – return the devinfo node name

SYNOPSIS

```
#include <sys/ddi.h>
#include <sys/sunddi.h>

char *ddi_node_name(dev_info_t *dip);
```

INTERFACE LEVEL

Solaris DDI specific (Solaris DDI).

PARAMETERS

dip A pointer the device's `dev_info` structure.

DESCRIPTION

`ddi_node_name()` returns the device node name contained in the `dev_info` node pointed to by *dip*.

RETURN VALUES

`ddi_node_name()` returns the device node name contained in the `dev_info` structure.

CONTEXT

`ddi_node_name()` can be called from user or interrupt context.

SEE ALSO

`ddi_binding_name`(9F)

Writing Device Drivers

NAME

ddi_peek, ddi_peek8, ddi_peek16, ddi_peek32, ddi_peek64, ddi_peekc, ddi_peeks, ddi_peekl, ddi_peekd – read a value from a location

SYNOPSIS

```
#include <sys/ddi.h>
#include <sys/sunddi.h>
```

```
int ddi_peek8(dev_info_t *dip, int8_t *addr, int8_t *valuep);
```

```
int ddi_peek16(dev_info_t *dip, int16_t *addr, int16_t *valuep);
```

```
int ddi_peek32(dev_info_t *dip, int32_t *addr, int32_t *valuep);
```

```
int ddi_peek64(dev_info_t *dip, int64_t *addr, int64_t *valuep);
```

INTERFACE LEVEL

Solaris DDI specific (Solaris DDI).

PARAMETERS

dip A pointer to the device's `dev_info` structure.

addr Virtual address of the location to be examined.

valuep Pointer to a location to hold the result. If a null pointer is specified, then the value read from the location will simply be discarded.

DESCRIPTION

These routines cautiously attempt to read a value from a specified virtual address, and return the value to the caller, using the parent nexus driver to assist in the process where necessary.

If the address is not valid, or the value cannot be read without an error occurring, an error code is returned.

The routines are most useful when first trying to establish the presence of a device on the system in a driver's `probe`(9E) or `attach`(9E) routines.

RETURN VALUES

`DDI_SUCCESS` The value at the given virtual address was successfully read, and if *valuep* is non-null, **valuep* will have been updated.

`DDI_FAILURE` An error occurred while trying to read the location. **valuep* is unchanged.

CONTEXT

These functions can be called from user or interrupt context.

EXAMPLES

EXAMPLE 1 Checking to see that the status register of a device is mapped into the kernel address space:

```
if (ddi_peek8(dip, csr, (int8_t *)0) != DDI_SUCCESS) {
        cmn_err(CE_WARN, "Status register not mapped");
        return (DDI_FAILURE);
    }
```

EXAMPLE 2 Reading and logging the device type of a particular device:

```
int
xx_attach(dev_info_t *dip, ddi_attach_cmd_t cmd)
{
```

EXAMPLE 2 Reading and logging the device type of a particular device: *(Continued)*

```
      ...
      /* map device registers */
      ...

      if (ddi_peek32(dip, id_addr, &id_value) != DDI_SUCCESS) {
              cmn_err(CE_WARN, "%s%d: cannot read device identifier",
                ddi_get_name(dip), ddi_get_instance(dip));
              goto failure;
      } else
              cmn_err(CE_CONT, "!%s%d: device type 0x%x\n",
                ddi_get_name(dip), ddi_get_instance(dip), id_value);
          ...
          ...

      ddi_report_dev(dip);
      return (DDI_SUCCESS);

failure:
      /* free any resources allocated */
      ...
      return (DDI_FAILURE);
}
```

SEE ALSO

`attach`(9E), `probe`(9E), `ddi_poke`(9F)

Writing Device Drivers

NOTES

The functions described in this manual page previously used symbolic names which specified their data access size; the function names have been changed so they now specify a fixed-width data size. See the following table for the new name equivalents:

Previous Name	New Name
ddi_peekc	ddi_peek8
ddi_peeks	ddi_peek16
ddi_peekl	ddi_peek32
ddi_peekd	ddi_peek64

NAME

ddi_poke, ddi_poke8, ddi_poke16, ddi_poke32, ddi_poke64, ddi_pokec, ddi_pokes, ddi_pokel, ddi_poked – write a value to a location

SYNOPSIS

```
#include <sys/ddi.h>
#include <sys/sunddi.h>
```

```
int ddi_poke8(dev_info_t *dip, int8_t *addr, int8_t value);
int ddi_poke16(dev_info_t *dip, int16_t *addr, int16_t value);
int ddi_poke32(dev_info_t *dip, int32_t *addr, int32_t value);
int ddi_poke64(dev_info_t *dip, int64_t *addr, int64_t value);
```

INTERFACE LEVEL

Solaris DDI specific (Solaris DDI).

PARAMETERS

dip A pointer to the device's `dev_info` structure.

addr Virtual address of the location to be written to.

value Value to be written to the location.

DESCRIPTION

These routines cautiously attempt to write a value to a specified virtual address, using the parent nexus driver to assist in the process where necessary.

If the address is not valid, or the value cannot be written without an error occurring, an error code is returned.

These routines are most useful when first trying to establish the presence of a given device on the system in a driver's `probe`(9E) or `attach`(9E) routines.

On multiprocessing machines these routines can be extremely heavy-weight, so use the `ddi_peek`(9F) routines instead if possible.

RETURN VALUES

`DDI_SUCCESS` The value was successfully written to the given virtual address.

`DDI_FAILURE` An error occurred while trying to write to the location.

CONTEXT

These functions can be called from user or interrupt context.

SEE ALSO

`attach`(9E), `probe`(9E), `ddi_peek`(9F)

Writing Device Drivers

NOTES

The functions described in this manual page previously used symbolic names which specified their data access size; the function names have been changed so they now specify a fixed-width data size. See the following table for the new name equivalents:

Previous Name	New Name
ddi_pokec	ddi_poke8
ddi_pokes	ddi_poke16

ddi_pokel	ddi_poke32
ddi_poked	ddi_poke64

NAME

ddi_prop_create, ddi_prop_modify, ddi_prop_remove, ddi_prop_remove_all, ddi_prop_undefine – create, remove, or modify properties for leaf device drivers

SYNOPSIS

```
#include <sys/conf.h>
#include <sys/ddi.h>
#include <sys/sunddi.h>
```

```
int ddi_prop_create(dev_t dev, dev_info_t *dip, int flags, char
    *name, caddr_t valuep, int length);
```

```
int ddi_prop_undefine(dev_t dev, dev_info_t *dip, int flags, char
    *name);
```

```
int ddi_prop_modify(dev_t dev, dev_info_t *dip, int flags, char
    *name, caddr_t valuep, int length);
```

```
int ddi_prop_remove(dev_t dev, dev_info_t *dip, char *name);
```

```
void ddi_prop_remove_all(dev_info_t *dip);
```

INTERFACE LEVEL

Solaris DDI specific (Solaris DDI).

PARAMETERS

ddi_prop_create( )

dev — `dev_t` of the device.

dip — `dev_info_t` pointer of the device.

flags — *flag* modifiers. The only possible flag value is `DDI_PROP_CANSLEEP`: Memory allocation may sleep.

name — name of property.

valuep — pointer to property value.

length — property length.

ddi_prop_undefine( )

dev — `dev_t` of the device.

dip — `dev_info_t` pointer of the device.

flags — flag modifiers. The only possible flag value is `DDI_PROP_CANSLEEP`: Memory allocation may sleep.

name — name of property.

ddi_prop_modify( )

dev — `dev_t` of the device.

dip — `dev_info_t` pointer of the device.

flags — flag modifiers. The only possible flag value is `DDI_PROP_CANSLEEP`: Memory allocation may sleep.

name — name of property.

valuep — pointer to property value.

length — property length.

ddi_prop_remove( )

dev `dev_t` of the device.

dip `dev_info_t` pointer of the device.

name name of property.

ddi_prop_remove_all( )

dip `dev_info_t` pointer of the device.

DESCRIPTION

Device drivers have the ability to create and manage their own properties as well as gain access to properties that the system creates on behalf of the driver. A driver uses `ddi_getproplen`(9F) to query whether or not a specific property exists.

Property creation is done by creating a new property definition in the driver's property list associated with *dip*.

Property definitions are stacked; they are added to the beginning of the driver's property list when created. Thus, when searched for, the most recent matching property definition will be found and its value will be return to the caller.

ddi_prop_create( )

`ddi_prop_create()` adds a property to the device's property list. If the property is not associated with any particular *dev* but is associated with the physical device itself, then the argument *dev* should be the special device `DDI_DEV_T_NONE`. If you do not have a *dev* for your device (for example during `attach`(9E) time), you can create one using `makedevice`(9F) with a major number of `DDI_MAJOR_T_UNKNOWN`. `ddi_prop_create()` will then make the correct *dev* for your device.

For boolean properties, you must set *length* to `0`. For all other properties, the *length* argument must be set to the number of bytes used by the data structure representing the property being created.

Note that creating a property involves allocating memory for the property list, the property name and the property value. If *flags* does not contain `DDI_PROP_CANSLEEP`, `ddi_prop_create()` returns `DDI_PROP_NO_MEMORY` on memory allocation failure or `DDI_PROP_SUCCESS` if the allocation succeeded. If `DDI_PROP_CANSLEEP` was set, the caller may sleep until memory becomes available.

ddi_prop_undefine( )

`ddi_prop_undefine()` is a special case of property creation where the value of the property is set to undefined. This property has the effect of terminating a property search at the current devinfo node, rather than allowing the search to proceed up to ancestor devinfo nodes. See `ddi_prop_op`(9F).

Note that undefining properties does involve memory allocation, and therefore, is subject to the same memory allocation constraints as `ddi_prop_create()`.

ddi_prop_modify( )

`ddi_prop_modify()` modifies the length and the value of a property. If `ddi_prop_modify()` finds the property in the driver's property list, allocates memory for the property value and returns `DDI_PROP_SUCCESS`. If the property was not found, the function returns `DDI_PROP_NOT_FOUND`.

Note that modifying properties does involve memory allocation, and therefore, is subject to the same memory allocation constraints as `ddi_prop_create()`.

ddi_prop_remove( ) `ddi_prop_remove()` unlinks a property from the device's property list. If `ddi_prop_remove()` finds the property (an exact match of both *name*and *dev*), it unlinks the property, frees its memory, and returns `DDI_PROP_SUCCESS`, otherwise, it returns `DDI_PROP_NOT_FOUND`.

ddi_prop_remove_all( ) `ddi_prop_remove_all()` removes the properties of all the `dev_t`'s associated with the *dip*. It is called before unloading a driver.

RETURN VALUES

ddi_prop_create( )	`DDI_PROP_SUCCESS`	on success.
	`DDI_PROP_NO_MEMORY`	on memory allocation failure.
	`DDI_PROP_INVAL_ARG`	if an attempt is made to create a property with *dev* equal to `DDI_DEV_T_ANY` or if *name* is `NULL` or *name* is the `NULL` string.
ddi_prop_undefine( )	`DDI_PROP_SUCCESS`	on success.
	`DDI_PROP_NO_MEMORY`	on memory allocation failure.
	`DDI_PROP_INVAL_ARG`	if an attempt is made to create a property with *dev* `DDI_DEV_T_ANY` or if *name* is `NULL` or *name* is the `NULL` string.
ddi_prop_modify( )	`DDI_PROP_SUCCESS`	on success.
	`DDI_PROP_NO_MEMORY`	on memory allocation failure.
	`DDI_PROP_INVAL_ARG`	if an attempt is made to create a property with *dev* equal to `DDI_DEV_T_ANY` or if *name* is `NULL` or *name* is the `NULL` string.
	`DDI_PROP_NOT_FOUND`	on property search failure.
ddi_prop_remove( )	`DDI_PROP_SUCCESS`	on success.
	`DDI_PROP_INVAL_ARG`	if an attempt is made to create a property with *dev* equal to `DDI_DEV_T_ANY` or if *name* is `NULL` or *name* is the `NULL` string.
	`DDI_PROP_NOT_FOUND`	on property search failure.

CONTEXT

If `DDI_PROP_CANSLEEP` is set, these functions can only be called from user context; otherwise, they can be called from interrupt or user context.

EXAMPLES

EXAMPLE 1 : Creating a property

The following example creates a property called *nblocks* for each partition on a disk.

```
for (minor = 0; minor < 8; minor ++) {
           (void) ddi_prop_create(makedevice(DDI_MAJOR_T_UNKNOWN, minor),
              dev, DDI_PROP_CANSLEEP, "nblocks", 8192, sizeof (int));
```

EXAMPLE 1 : Creating a property *(Continued)*

```
            . . .
}
```

SEE ALSO

`driver.conf`(4), `attach`(9E), `ddi_getproplen`(9F), `ddi_prop_op`(9F), `makedevice`(9F)

Writing Device Drivers

NAME

ddi_prop_exists – check for the existence of a property

SYNOPSIS

```
#include <sys/ddi.h>
#include <sys/sunddi.h>

int ddi_prop_exists(dev_t match_dev, dev_info_t *dip, uint_t flags,
     char *name);
```

INTERFACE LEVEL

Solaris DDI specific (Solaris DDI).

PARAMETERS

match_dev Device number associated with property or `DDI_DEV_T_ANY`.

dip Pointer to the device info node of device whose property list should be searched.

flags Possible flag values are some combination of:

`DDI_PROP_DONTPASS`
: Do not pass request to parent device information node if the property is not found.

`DDI_PROP_NOTPROM`
: Do not look at PROM properties (ignored on platforms that do not support PROM properties).

name String containing the name of the property.

DESCRIPTION

`ddi_prop_exists()` checks for the existence of a property regardless of the property value data type.

Properties are searched for based on the *dip*, *name*, and *match_dev*. The property search order is as follows:

1. Search software properties created by the driver.
2. Search the software properties created by the system (or nexus nodes in the device info tree).
3. Search the driver global properties list.
4. If `DDI_PROP_NOTPROM` is not set, search the PROM properties (if they exist).
5. If `DDI_PROP_DONTPASS` is not set, pass this request to the parent device information node.
6. Return `0` if not found and `1` if found.

Usually, the *match_dev* argument should be set to the actual device number that this property is associated with. However, if the *match_dev* argument is `DDI_DEV_T_ANY`, then `ddi_prop_exists()` will match the request regardless of the *match_dev* the property was created with. That is the first property whose name matches *name* will be returned. If a property was created with *match_dev* set to `DDI_DEV_T_NONE` then the only way to look up this property is with a *match_dev* set to `DDI_DEV_T_ANY`. PROM properties are always created with *match_dev* set to `DDI_DEV_T_NONE`.

name must always be set to the name of the property being looked up.

RETURN VALUES

`ddi_prop_exists()` returns `1` if the property exists and `0` otherwise.

CONTEXT

These functions can be called from user or kernel context.

EXAMPLES

EXAMPLE 1 : Using `ddi_prop_exists()`

The following example demonstrates the use of `ddi_prop_exists()`.

```
/*
    * Enable "whizzy" mode if the "whizzy-mode" property exists
    */
    if (ddi_prop_exists(xx_dev, xx_dip, DDI_PROP_NOTPROM,
            "whizzy-mode") == 1) {
          xx_enable_whizzy_mode(xx_dip);
    } else {
          xx_disable_whizzy_mode(xx_dip);
    }
```

SEE ALSO

`ddi_prop_get_int`(9F), `ddi_prop_lookup`(9F), `ddi_prop_remove`(9F), `ddi_prop_update`(9F)

Writing Device Drivers

NAME

ddi_prop_get_int – lookup integer property

SYNOPSIS

```
#include <sys/ddi.h>
#include <sys/sunddi.h>
```

```
int ddi_prop_get_int(dev_t match_dev, dev_info_t *dip, uint_t flags,
     char *name, int defvalue);
```

PARAMETERS

match_dev Device number associated with property or `DDI_DEV_T_ANY`.

dip Pointer to the device info node of device whose property list should be searched.

flags Possible flag values are some combination of:

`DDI_PROP_DONTPASS`
: Do not pass request to parent device information node if property not found.

`DDI_PROP_NOTPROM`
: Do not look at PROM properties (ignored on platforms that do not support PROM properties).

name String containing the name of the property.

defvalue An integer value that is returned if the property cannot be found.

INTERFACE LEVEL

Solaris DDI specific (Solaris DDI).

DESCRIPTION

`ddi_prop_get_int()` searches for an integer property and, if found, returns the value of the property.

Properties are searched for based on the *dip*, *name*, *match_dev*, and the type of the data (integer). The property search order is as follows:

1. Search software properties created by the driver.
2. Search the software properties created by the system (or nexus nodes in the device info tree).
3. Search the driver global properties list.
4. If `DDI_PROP_NOTPROM` is not set, search the PROM properties (if they exist).
5. If `DDI_PROP_DONTPASS` is not set, pass this request to the parent device information node.
6. Return `DDI_PROP_NOT_FOUND`.

Usually, the *match_dev* argument should be set to the actual device number that this property is associated with. However, if the *match_dev* argument is `DDI_DEV_T_ANY`, then `ddi_prop_get_int()` will match the request regardless of the *match_dev* the property was created with. If a property was created with *match_dev* set to `DDI_DEV_T_NONE`, then the only way to look up this property is with a *match_dev* set to `DDI_DEV_T_ANY`. PROM properties are always created with *match_dev* set to `DDI_DEV_T_NONE`.

name must always be set to the name of the property being looked up.

The return value of the routine is the value of the property. If the property is not found, the argument *defvalue* is returned as the value of the property.

RETURN VALUES

`ddi_prop_get_int()` returns the value of the property. If the property is not found, the argument `defvalue` is returned.

CONTEXT

`ddi_prop_get_int()` can be called from user or kernel context.

EXAMPLES

EXAMPLE 1 : Using `ddi_prop_get_int()`

The following example demonstrates the use of `ddi_prop_get_int()`.

```
/*
    * Get the value of the integer "width" property, using
    * our own default if no such property exists
    */
    width = ddi_prop_get_int(xx_dev, xx_dip, 0, "width",
               XX_DEFAULT_WIDTH);
```

SEE ALSO

`ddi_prop_exists`(9F), `ddi_prop_lookup`(9F), `ddi_prop_remove`(9F), `ddi_prop_update`(9F)

Writing Device Drivers

NAME

ddi_prop_lookup, ddi_prop_lookup_int_array, ddi_prop_lookup_string_array, ddi_prop_lookup_string, ddi_prop_lookup_byte_array, ddi_prop_free – look up property information

SYNOPSIS

```
#include <sys/ddi.h>
#include <sys/sunddi.h>
```

```
int ddi_prop_lookup_int_array(dev_t match_dev, dev_info_t *dip,
     uint_t flags, char *name, int **datap, uint_t *nelementsp);
```

```
int ddi_prop_lookup_string_array(dev_t match_dev, dev_info_t *dip,
     uint_t flags, char *name, char ***datap, uint_t *nelementsp);
```

```
int ddi_prop_lookup_string(dev_t match_dev, dev_info_t *dip, uint_t
     flags, char *name, char **datap);
```

```
int ddi_prop_lookup_byte_array(dev_t match_dev, dev_info_t *dip,
     uint_t flags, char *name, uchar_t **datap, uint_t *nelementsp);
```

```
void ddi_prop_free(void *data);
```

PARAMETERS

match_dev Device number associated with property or `DDI_DEV_T_ANY`.

dip Pointer to the device info node of device whose property list should be searched.

flags Possible flag values are some combination of:

`DDI_PROP_DONTPASS`
Do not pass request to parent device information node if the property is not found.

`DDI_PROP_NOTPROM`
Do not look at PROM properties (ignored on platforms that do not support PROM properties).

name String containing the name of the property.

nelementsp The address of an unsigned integer which, upon successful return, will contain the number of elements accounted for in the memory pointed at by *datap*. The elements are either integers, strings or bytes depending on the interface used.

datap

`ddi_prop_lookup_int_array()`
The address of a pointer to an array of integers which, upon successful return, will point to memory containing the integer array property value.

`ddi_prop_lookup_string_array()`
The address of a pointer to an array of strings which, upon successful return, will point to memory containing the array of

strings. The array of strings is formatted as an array of pointers to NULL terminated strings, much like the *argv* argument to `execve`(2).

`ddi_prop_lookup_string()`
The address of a pointer to a string which, upon successful return, will point to memory containing the NULL terminated string value of the property.

`ddi_prop_lookup_byte_array()`
The address of pointer to an array of bytes which, upon successful return, will point to memory containing the byte array value of the property.

INTERFACE LEVEL

Solaris DDI specific (Solaris DDI).

DESCRIPTION

The property look up routines search for and, if found, return the value of a given property. Properties are searched for based on the *dip*, *name*, *match_dev*, and the type of the data (integer, string or byte). The property search order is as follows:

1. Search software properties created by the driver.
2. Search the software properties created by the system (or nexus nodes in the device info tree).
3. Search the driver global properties list.
4. If `DDI_PROP_NOTPROM` is not set, search the PROM properties (if they exist).
5. If `DDI_PROP_DONTPASS` is not set, pass this request to the parent device information node.
6. Return `DDI_PROP_NOT_FOUND`.

Usually, the *match_dev* argument should be set to the actual device number that this property is associated with. However, if the *match_dev* argument is `DDI_DEV_T_ANY`, the property look up routines will match the request regardless of the actual *match_dev* the property was created with. If a property was created with *match_dev* set to `DDI_DEV_T_NONE` ,then the only way to look up this property is with a *match_dev* set to `DDI_DEV_T_ANY`. PROM properties are always created with *match_dev* set to `DDI_DEV_T_NONE`.

name must always be set to the name of the property being looked up.

For the routines `ddi_prop_lookup_int_array()`, `ddi_prop_lookup_string_array()`, `ddi_prop_lookup_string()`, and `ddi_prop_lookup_byte_array()`, *datap* is the address of a pointer which, upon successful return, will point to memory containing the value of the property. In each case **datap* points to a different type of property value. See the individual descriptions of the routines below for details on the different return values. *nelementsp* is the address of an unsigned integer which, upon successful return, will contain the number of integer, string or byte elements accounted for in the memory pointed at by **datap*.

All of the property look up routines may block to allocate memory needed to hold the value of the property.

When a driver has obtained a property with any look up routine and is finished with that property, it must be freed by calling `ddi_prop_free()`. `ddi_prop_free()` must be called with the address of the allocated property. For instance, if one called `ddi_prop_lookup_int_array()` with *datap* set to the address of a pointer to an integer, *&my_int_ptr*, then the companion free call would be `ddi_prop_free(`*my_int_ptr*`)`.

`ddi_prop_lookup_int_array()`
: This routine searches for and returns an array of integer property values. An array of integers is defined to **nelementsp* number of 4 byte long integer elements. *datap* should be set to the address of a pointer to an array of integers which, upon successful return, will point to memory containing the integer array value of the property.

`ddi_prop_lookup_string_array()`
: This routine searches for and returns a property that is an array of strings. *datap* should be set to address of a pointer to an array of strings which, upon successful return, will point to memory containing the array of strings. The array of strings is formatted as an array of pointers to null-terminated strings, much like the *argv* argument to `execve`(2).

`ddi_prop_lookup_string()`
: This routine searches for and returns a property that is a null-terminated string. *datap* should be set to the address of a pointer to string which, upon successful return, will point to memory containing the string value of the property.

`ddi_prop_lookup_byte_array()`
: This routine searches for and returns a property that is an array of bytes. *datap* should be set to the address of a pointer to an array of bytes which, upon successful return, will point to memory containing the byte array value of the property.

`ddi_prop_free()`
: Frees the resources associated with a property previously allocated using `ddi_prop_lookup_int_array()`, `ddi_prop_lookup_string_array()`, `ddi_prop_lookup_string()`, or `ddi_prop_lookup_byte_array()`.

RETURN VALUES

The functions `ddi_prop_lookup_int_array()`, `ddi_prop_lookup_string_array()`, `ddi_prop_lookup_string()`, and `ddi_prop_lookup_byte_array()` return the following values:

`DDI_PROP_SUCCESS`	Upon success.
`DDI_PROP_INVAL_ARG`	If an attempt is made to look up a property with *match_dev* equal to `DDI_DEV_T_NONE`, *name* is NULL or *name* is the null string.
`DDI_PROP_NOT_FOUND`	Property not found.

DDI_PROP_UNDEFINED	Property explicitly not defined (see ddi_prop_undefine(9F)).
DDI_PROP_CANNOT_DECODE	The value of the property cannot be decoded.

CONTEXT

These functions can be called from user or kernel context.

EXAMPLES

EXAMPLE 1 Using ddi_prop_lookup():

The following example demonstrates the use of ddi_prop_lookup().

```
int    *options;
int    noptions;

/*
 * Get the data associated with the integer "options" property
 * array, along with the number of option integers
 */
    if (ddi_prop_lookup_int_array(DDI_DEV_T_ANY, xx_dip, 0,
     "options", &options, &noptions) == DDI_PROP_SUCCESS) {
     /*
     * Do "our thing" with the options data from the property
     */
     xx_process_options(options, noptions);

     /*
      * Free the memory allocated for the property data
      */
     ddi_prop_free(options);
}
```

SEE ALSO

execve(2), ddi_prop_exists(9F), ddi_prop_get_int(9F), ddi_prop_remove(9F), ddi_prop_undefine(9F), ddi_prop_update(9F)

Writing Device Drivers

NAME

ddi_prop_op, ddi_getprop, ddi_getlongprop, ddi_getlongprop_buf, ddi_getproplen – get property information for leaf device drivers

SYNOPSIS

```
#include <sys/types.h>
#include <sys/ddi.h>
#include <sys/sunddi.h>
```

```
int ddi_prop_op(dev_t dev, dev_info_t *dip, ddi_prop_op_t prop_op,
     int flags, char *name, caddr_t valuep, int *lengthp);
```

```
int ddi_getprop(dev_t dev, dev_info_t *dip, int flags, char *name,
     int defvalue);
```

```
int ddi_getlongprop(dev_t dev, dev_info_t *dip, int flags, char
     *name, caddr_t valuep, int *lengthp);
```

```
int ddi_getlongprop_buf(dev_t dev, dev_info_t *dip, int flags, char
     *name, caddr_t valuep, int *lengthp);
```

```
int ddi_getproplen(dev_t dev, dev_info_t *dip, int flags, char *name,
     int *lengthp);
```

INTERFACE LEVEL

Solaris DDI specific (Solaris DDI).

PARAMETERS

dev Device number associated with property or `DDI_DEV_T_ANY` as the *wildcard* device number.

dip Pointer to a device info node.

prop_op Property operator.

flags Possible flag values are some combination of:

`DDI_PROP_DONTPASS`
: do not pass request to parent device information node if property not found

`DDI_PROP_CANSLEEP`
: the routine may sleep while allocating memory

`DDI_PROP_NOTPROM`
: do not look at PROM properties (ignored on architectures that do not support PROM properties)

name String containing the name of the property.

valuep If *prop_op* is `PROP_LEN_AND_VAL_BUF`, this should be a pointer to the users buffer. If *prop_op* is `PROP_LEN_AND_VAL_ALLOC`, this should be the *address* of a pointer.

lengthp On exit, **lengthp* will contain the property length. If *prop_op* is `PROP_LEN_AND_VAL_BUF` then before calling `ddi_prop_op()`, *lengthp* should point to an `int` that contains the length of callers buffer.

defvalue The value that `ddi_getprop()` returns if the property is not found.

DESCRIPTION

`ddi_prop_op()` gets arbitrary-size properties for leaf devices. The routine searches the device's property list. If it does not find the property at the device level, it examines the *flags* argument, and if `DDI_PROP_DONTPASS` is set, then `ddi_prop_op()` returns `DDI_PROP_NOT_FOUND`. Otherwise, it passes the request to the next level of the device info tree. If it does find the property, but the property has been explicitly undefined, it returns `DDI_PROP_UNDEFINED`. Otherwise it returns either the property length, or both the length and value of the property to the caller via the *valuep* and *lengthp* pointers, depending on the value of *prop_op*, as described below, and returns `DDI_PROP_SUCCESS`. If a property cannot be found at all, `DDI_PROP_NOT_FOUND` is returned.

Usually, the *dev* argument should be set to the actual device number that this property applies to. However, if the *dev* argument is `DDI_DEV_T_ANY`, the *wildcard dev*, then `ddi_prop_op()` will match the request based on *name* only (regardless of the actual *dev* the property was created with). This property/dev match is done according to the property search order which is to first search software properties created by the driver in *last-in, first-out* (LIFO) order, next search software properties created by the *system* in LIFO order, then search PROM properties if they exist in the system architecture.

Property operations are specified by the *prop_op* argument. If *prop_op* is `PROP_LEN`, then `ddi_prop_op()` just sets the callers length, **lengthp*, to the property length and returns the value `DDI_PROP_SUCCESS` to the caller. The *valuep* argument is not used in this case. Property lengths are `0` for boolean properties, `sizeof (int)` for integer properties, and size in bytes for long (variable size) properties.

If *prop_op* is `PROP_LEN_AND_VAL_BUF`, then *valuep* should be a pointer to a user-supplied buffer whose length should be given in **lengthp* by the caller. If the requested property exists, `ddi_prop_op()` first sets **lengthp* to the property length. It then examines the size of the buffer supplied by the caller, and if it is large enough, copies the property value into that buffer, and returns `DDI_PROP_SUCCESS`. If the named property exists but the buffer supplied is too small to hold it, it returns `DDI_PROP_BUF_TOO_SMALL`.

If *prop_op* is `PROP_LEN_AND_VAL_ALLOC`, and the property is found, `ddi_prop_op()` sets **lengthp* to the property length. It then attempts to allocate a buffer to return to the caller using the `kmem_alloc`(9F) routine, so that memory can be later recycled using `kmem_free`(9F). The driver is expected to call `kmem_free()` with the returned address and size when it is done using the allocated buffer. If the allocation is successful, it sets **valuep* to point to the allocated buffer, copies the property value into the buffer and returns `DDI_PROP_SUCCESS`. Otherwise, it returns `DDI_PROP_NO_MEMORY`. Note that the *flags* argument may affect the behavior of memory allocation in `ddi_prop_op()`. In particular, if `DDI_PROP_CANSLEEP` is set, then the routine will wait until memory is available to copy the requested property.

`ddi_getprop()` returns boolean and integer-size properties. It is a convenience wrapper for `ddi_prop_op()` with *prop_op* set to `PROP_LEN_AND_VAL_BUF`, and the buffer is provided by the wrapper. By convention, this function returns a `1` for boolean (zero-length) properties.

`ddi_getlongprop()` returns arbitrary-size properties. It is a convenience wrapper for `ddi_prop_op()` with *prop_op* set to `PROP_LEN_AND_VAL_ALLOC`, so that the routine will allocate space to hold the buffer that will be returned to the caller via **valuep*.

`ddi_getlongprop_buf()` returns arbitrary-size properties. It is a convenience wrapper for `ddi_prop_op()` with *prop_op* set to `PROP_LEN_AND_VAL_BUF` so the user must supply a buffer.

`ddi_getproplen()` returns the length of a given property. It is a convenience wrapper for `ddi_prop_op()` with *prop_op* set to `PROP_LEN`.

RETURN VALUES

`ddi_prop_op()` `ddi_getlongprop()` `ddi_getlongprop_buf()` `ddi_getproplen()` return:

`DDI_PROP_SUCCESS`	Property found and returned.
`DDI_PROP_NOT_FOUND`	Property not found.
`DDI_PROP_UNDEFINED`	Property already explicitly undefined.
`DDI_PROP_NO_MEMORY`	Property found, but unable to allocate memory. *lengthp* points to the correct property length.
`DDI_PROP_BUF_TOO_SMALL`	Property found, but the supplied buffer is too small. *lengthp* points to the correct property length.

`ddi_getprop()` returns:

The value of the property or the value passed into the routine as *defvalue* if the property is not found. By convention, the value of zero length properties (boolean properties) are returned as the integer value 1.

CONTEXT

These functions can be called from user or interrupt context, provided `DDI_PROP_CANSLEEP` is not set; if it is set, they can be called from user context only.

SEE ALSO

`ddi_prop_create`(9F), `kmem_alloc`(9F), `kmem_free`(9F)

Writing Device Drivers

NAME

ddi_prop_update, ddi_prop_update_int_array, ddi_prop_update_int, ddi_prop_update_string_array, ddi_prop_update_string, ddi_prop_update_byte_array – update properties

SYNOPSIS

```
#include <sys/ddi.h>
#include <sys/sunddi.h>
```

```
int ddi_prop_update_int_array(dev_t dev, dev_info_t *dip, char
    *name, int *data, uint_t nelements);
```

```
int ddi_prop_update_int(dev_t dev, dev_info_t *dip, char *name, int
    data);
```

```
int ddi_prop_update_string_array(dev_t dev, dev_info_t *dip, char
    *name, char **data, uint_t nelements);
```

```
int ddi_prop_update_string(dev_t dev, dev_info_t *dip, char *name,
    char *data);
```

```
int ddi_prop_update_byte_array(dev_t dev, dev_info_t *dip, char
    *name, uchar_t *data, uint_t nelements);
```

PARAMETERS

dev Device number associated with the device.

dip Pointer to the device info node of device whose property list should be updated.

name String containing the name of the property to be updated.

nelements The number of elements contained in the memory pointed at by *data*.

`ddi_prop_update_int_array()`

data A pointer an integer array with which to update the property.

`ddi_prop_update_int()`

data An integer value with which to update the property.

`ddi_prop_update_string_array()`

data A pointer to a string array with which to update the property. The array of strings is formatted as an array of pointers to NULL terminated strings, much like the *argv* argument to `execve`(2).

`ddi_prop_update_string()`

data A pointer to a string value with which to update the property.

`ddi_prop_update_byte_array()`

data A pointer to a byte array with which to update the property.

INTERFACE LEVEL

Solaris DDI specific (Solaris DDI).

DESCRIPTION

The property update routines search for and, if found, modify the value of a given property. Properties are searched for based on the *dip*, *name*, *dev*, and the type of the data (integer, string or byte). The driver software properties list is searched. If the property is found, it is updated with the supplied value. If the property is not found on this list, a new property is created with the value supplied. For example, if a driver attempts to update the "foo" property, a property named "foo" is searched for on the driver's software property list. If "foo" is found, the value is updated. If "foo" is not found, a new property named "foo" is created on the driver's software property list with the supplied value even if a "foo" property exists on another property list (such as a PROM property list).

Every property value has a data type associated with it: byte, integer, or string. A property should be updated using a function with the same corresponding data type as the property value. For example, an integer property must be updated using either `ddi_prop_update_int_array()` or `ddi_prop_update_int()`. Attempts to update a property with a function that does correspond to the property value data type will result in the creation of another property with the same name. However, the data type of the new property value will correspond to the data type called out in the function name.

Usually, the *dev* argument should be set to the actual device number that this property is associated with. If the property is not associated with any particular *dev*, then the argument *dev* should be set to `DDI_DEV_T_NONE`. This property will then match a look up request (see `ddi_prop_lookup`(9F)) with the *match_dev* argument set to `DDI_DEV_T_ANY`. If no *dev* is available for the device (for example during `attach`(9E) time), one can be created using `makedevice`(9F) with a major number of `DDI_MAJOR_T_UNKNOWN`. The update routines will then generate the correct *dev* when creating or updating the property.

name must always be set to the name of the property being updated.

For the routines `ddi_prop_update_int_array( )`, `ddi_prop_update_string_array( )`, `ddi_prop_update_string( )`, and `ddi_prop_update_byte_array( )` *data* is a pointer which points to memory containing the value of the property. In each case **data* points to a different type of property value. See the individual descriptions of the routines below for details concerning the different values. *nelements* is an unsigned integer which contains the number of integer, string, or byte elements accounted for in the memory pointed at by **data*.

For the routine `ddi_prop_update_int( )`, *data* is the new value of the property.

`ddi_prop_update_int_array()`

Updates or creates an array of integer property values. An array of integers is defined to be *nelements* of 4 byte long integer elements. *data* must be a pointer to an integer array with which to update the property.

`ddi_prop_update_int()`

Update or creates a single integer value of a property. *data* must be an integer value with which to update the property.

`ddi_prop_update_string_array()`

Updates or creates a property that is an array of strings. *data* must be a pointer to a string array with which to update the property. The array of strings is formatted as an array of pointers to NULLterminated strings, much like the *argv* argument to `execve`(2).

`ddi_prop_update_string()`

Updates or creates a property that is a single string value. *data* must be a pointer to a string with which to update the property.

`ddi_prop_update_byte_array()`

Updates or creates a property that is an array of bytes. *data* should be a pointer to a byte array with which to update the property.

The property update routines may block to allocate memory needed to hold the value of the property.

RETURN VALUES

All of the property update routines return:

`DDI_PROP_SUCCESS`	On success.
`DDI_PROP_INVAL_ARG`	If an attempt is made to update a property with *name* set to `NULL` or *name* set to the null string.
`DDI_PROP_CANNOT_ENCODE`	If the bytes of the property cannot be encoded.

CONTEXT

These functions can only be called from user or kernel context.

EXAMPLES

EXAMPLE 1 Updating Properties

The following example demonstrates the use of `ddi_prop_update()`.

```
int    options[4];

    /*
     * Create the "options" integer array with
     * our default values for these parameters
     */
    options[0] = XX_OPTIONS0;
    options[1] = XX_OPTIONS1;
    options[2] = XX_OPTIONS2;
    options[3] = XX_OPTIONS3;
    i = ddi_prop_update_int_array(xx_dev, xx_dip, "options",
        &options, sizeof (options) / sizeof (int));
```

EXAMPLE 1 Updating Properties *(Continued)*

SEE ALSO

`execve`(2), `attach`(9E), `ddi_prop_lookup`(9F), `ddi_prop_remove`(9F), `makedevice`(9F)

Writing Device Drivers

NAME

ddi_put8, ddi_put16, ddi_put32, ddi_put64, ddi_putb, ddi_putl, ddi_putll, ddi_putw – write data to the mapped memory address, device register or allocated DMA memory address

SYNOPSIS

```
#include <sys/ddi.h>
#include <sys/sunddi.h>

void ddi_put8(ddi_acc_handle_t handle, uint8_t *dev_addr, uint8_t
     value);

void ddi_put16(ddi_acc_handle_t handle, uint16_t *dev_addr, uint16_t
     value);

void ddi_put32(ddi_acc_handle_t handle, uint32_t *dev_addr, uint32_t
     value);

void ddi_put64(ddi_acc_handle_t handle, uint64_t *dev_addr, uint64_t
     value);
```

INTERFACE LEVEL

Solaris DDI specific (Solaris DDI).

PARAMETERS

handle The data access handle returned from setup calls, such as `ddi_regs_map_setup`(9F).

value The data to be written to the device.

dev_addr Base device address.

DESCRIPTION

These routines generate a write of various sizes to the mapped memory or device register. The `ddi_put8()`, `ddi_put16()`, `ddi_put32()`, and `ddi_put64()` functions write 8 bits, 16 bits, 32 bits and 64 bits of data, respectively, to the device address, *dev_addr*.

Each individual datum will automatically be translated to maintain a consistent view between the host and the device based on the encoded information in the data access handle. The translation may involve byte-swapping if the host and the device have incompatible endian characteristics.

For certain bus types, you can call these DDI functions from a high-interrupt context. These types include ISA, EISA, and SBus buses. See `sysbus`(4), `isa`(4), `eisa`(4), and `sbus`(4) for details. For the PCI bus, you can, under certain conditions, call these DDI functions from a high-interrupt context. See `pci`(4).

CONTEXT

These functions can be called from user, kernel, or interrupt context.

SEE ALSO

`ddi_get8`(9F), `ddi_regs_map_free`(9F), `ddi_regs_map_setup`(9F), `ddi_rep_get8`(9F), `ddi_rep_put8`(9F), `ddi_device_acc_attr`(9S)

NOTES

The functions described in this manual page previously used symbolic names which specified their data access size; the function names have been changed so they now specify a fixed-width data size. See the following table for the new name equivalents:

Previous Name	New Name
ddi_putb	ddi_put8
ddi_putw	ddi_put16
ddi_putl	ddi_put32
ddi_putll	ddi_put64

NAME

ddi_regs_map_free – free a previously mapped register address space

SYNOPSIS

```
#include <sys/ddi.h>
#include <sys/sunddi.h>

void ddi_regs_map_free(ddi_acc_handle_t *handle);
```

INTERFACE LEVEL

Solaris DDI specific (Solaris DDI).

PARAMETERS

handle Pointer to a data access handle previously allocated by a call to a setup routine such as `ddi_regs_map_setup`(9F).

DESCRIPTION

`ddi_regs_map_free()` frees the mapping represented by the data access handle *handle*. This function is provided for drivers preparing to detach themselves from the system, allowing them to release allocated system resources represented in the handle.

CONTEXT

`ddi_regs_map_free()` must be called from user or kernel context.

ATTRIBUTES

See `attributes`(5) for descriptions of the following attributes:

ATTRIBUTE TYPE	ATTRIBUTE VALUE
Architecture	PCI Local Bus, SBus, ISA, EISA

SEE ALSO

`attributes`(5), `ddi_regs_map_setup`(9F)

Writing Device Drivers

NAME

ddi_regs_map_setup – set up a mapping for a register address space

SYNOPSIS

```
#include <sys/ddi.h>
#include <sys/sunddi.h>
```

int **ddi_regs_map_setup**(dev_info_t *dip, uint_t rnumber, caddr_t *addrp, offset_t offset, offset_t len, ddi_device_acc_attr_t *accattrp, ddi_acc_handle_t *handlep);

INTERFACE LEVEL

Solaris DDI specific (Solaris DDI).

PARAMETERS

dip Pointer to the device's `dev_info` structure.

rnumber Index number to the register address space set.

addrp A platform-dependent value that, when added to an offset that is less than or equal to the *len* parameter (see below), is used for the `dev_addr` argument to the `ddi_get`, `ddi_mem_get`, and `ddi_io_get/put` routines.

offset Offset into the register address space.

len Length to be mapped.

accattrp Pointer to a device access attribute structure of this mapping (see `ddi_device_acc_attr`(9S)).

handlep Pointer to a data access handle.

DESCRIPTION

`ddi_regs_map_setup()` maps in the register set given by *rnumber*. The register number determines which register set is mapped if more than one exists.

offset specifies the starting location within the register space and *len* indicates the size of the area to be mapped. If *len* is non-zero, it overrides the length given in the register set description. If both *len* and *offset* are `0`, the entire space is mapped. The base of the mapped register space is returned in *addrp*.

The device access attributes are specified in the location pointed by the *accattrp* argument (see `ddi_device_acc_attr`(9S) for details).

The data access handle is returned in *handlep*. *handlep* is opaque; drivers should not attempt to interpret its value. The handle is used by the system to encode information for subsequent data access function calls to maintain a consistent view between the host and the device.

RETURN VALUES

`ddi_regs_map_setup()` returns:

`DDI_SUCCESS` Successfully set up the mapping for data access.

`DDI_FAILURE` Invalid register number *rnumber*, offset *offset*, or length *len*.

`DDI_REGS_ACC_CONFLICT`	Cannot enable the register mapping due to access conflicts with other enabled mappings.

CONTEXT

`ddi_regs_map_setup()` must be called from user or kernel context.

ATTRIBUTES

See `attributes`(5) for descriptions of the following attributes:

ATTRIBUTE TYPE	ATTRIBUTE VALUE
Architecture	PCI Local Bus, SBus, ISA, EISA

SEE ALSO

`attributes`(5), `ddi_regs_map_free`(9F), `ddi_device_acc_attr`(9S)

Writing Device Drivers

NAME

ddi_remove_minor_node – remove a minor node for this dev_info

SYNOPSIS

`void` **`ddi_remove_minor_node`**`(dev_info_t *`*dip*`, char *`*name*`);`

INTERFACE LEVEL

Solaris DDI specific (Solaris DDI).

PARAMETERS

dip A pointer to the device's `dev_info` structure.

name The name of this minor device. If *name* is `NULL`, then remove all minor data structures from this `dev_info`.

DESCRIPTION

`ddi_remove_minor_node()` removes a data structure from the linked list of minor data structures that is pointed to by the `dev_info` structure for this driver.

EXAMPLES

EXAMPLE 1 Removing a minor node

This will remove a data structure describing a minor device called `dev1` which is linked into the `dev_info` structure pointed to by `dip`:

```
ddi_remove_minor_node(dip, "dev1");
```

SEE ALSO

`attach`(9E), `detach`(9E), `ddi_create_minor_node`(9F)

Writing Device Drivers

NAME

ddi_rep_get8, ddi_rep_get16, ddi_rep_get32, ddi_rep_get64, ddi_rep_getw, ddi_rep_getl, ddi_rep_getll, ddi_rep_getb – read data from the mapped memory address, device register or allocated DMA memory address

SYNOPSIS

```
#include <sys/ddi.h>
#include <sys/sunddi.h>

void ddi_rep_get8(ddi_acc_handle_t handle, uint8_t *host_addr,
     uint8_t *dev_addr, size_t repcount, uint_t flags);

void ddi_rep_get16(ddi_acc_handle_t handle, uint16_t *host_addr,
     uint16_t *dev_addr, size_t repcount, uint_t flags);

void ddi_rep_get32(ddi_acc_handle_t handle, uint32_t *host_addr,
     uint32_t *dev_addr, size_t repcount, uint_t flags);

void ddi_rep_get64(ddi_acc_handle_t handle, uint64_t *host_addr,
     uint64_t *dev_addr, size_t repcount, uint_t flags);
```

INTERFACE LEVEL

Solaris DDI specific (Solaris DDI).

PARAMETERS

handle The data access handle returned from setup calls, such as `ddi_regs_map_setup`(9F).

host_addr Base host address.

dev_addr Base device address.

repcount Number of data accesses to perform.

flags Device address flags:

`DDI_DEV_AUTOINCR`
: Automatically increment the device address, *dev_addr*, during data accesses.

`DDI_DEV_NO_AUTOINCR`
: Do not advance the device address, *dev_addr*, during data accesses.

DESCRIPTION

These routines generate multiple reads from the mapped memory or device register. *repcount* data is copied from the device address, *dev_addr*, to the host address, *host_addr*. For each input datum, the `ddi_rep_get8()`, `ddi_rep_get16()`, `ddi_rep_get32()`, and `ddi_rep_get64()` functions read 8 bits, 16 bits, 32 bits, and 64 bits of data, respectively, from the device address, *dev_addr*. *dev_addr* and *host_addr* must be aligned to the datum boundary described by the function.

Each individual datum will automatically be translated to maintain a consistent view between the host and the device based on the encoded information in the data access handle. The translation may involve byte-swapping if the host and the device have incompatible endian characteristics.

When the *flags* argument is set to DDI_DEV_AUTOINCR, these functions treat the device address, *dev_addr*, as a memory buffer location on the device and increment its address on the next input datum. However, when the *flags* argument is to DDI_DEV_NO_AUTOINCR, the same device address will be used for every datum access. For example, this flag may be useful when reading from a data register.

RETURN VALUES

These functions return the value read from the mapped address.

CONTEXT

These functions can be called from user, kernel, or interrupt context.

SEE ALSO

ddi_get8(9F), ddi_put8(9F), ddi_regs_map_free(9F), ddi_regs_map_setup(9F), ddi_rep_put8(9F)

NOTES

The functions described in this manual page previously used symbolic names which specified their data access size; the function names have been changed so they now specify a fixed-width data size. See the following table for the new name equivalents:

Previous Name	New Name
ddi_rep_getb	ddi_rep_get8
ddi_rep_getw	ddi_rep_get16
ddi_rep_getl	ddi_rep_get32
ddi_rep_getll	ddi_rep_get64

NAME

ddi_report_dev – announce a device

SYNOPSIS

```
#include <sys/conf.h>
#include <sys/ddi.h>
#include <sys/sunddi.h>

void ddi_report_dev(dev_info_t *dip);
```

INTERFACE LEVEL

Solaris DDI specific (Solaris DDI).

PARAMETERS

dip a pointer the device's `dev_info` structure.

DESCRIPTION

`ddi_report_dev()` prints a banner at boot time, announcing the device pointed to by *dip*. The banner is always placed in the system logfile (displayed by `dmesg`(1M)), but is only displayed on the console if the system was booted with the verbose (`-v`) argument.

CONTEXT

`ddi_report_dev()` can be called from user context.

SEE ALSO

`dmesg`(1M), `kernel`(1M)

Writing Device Drivers

NAME

ddi_rep_put8, ddi_rep_put16, ddi_rep_put32, ddi_rep_put64, ddi_rep_putb, ddi_rep_putw, ddi_rep_putl, ddi_rep_putll – write data to the mapped memory address, device register or allocated DMA memory address

SYNOPSIS

```
#include <sys/ddi.h>
#include <sys/sunddi.h>
```

```
void ddi_rep_put8(ddi_acc_handle_t handle, uint8_t *host_addr,
     uint8_t *dev_addr, size_t repcount, uint_t flags);
```

```
void ddi_rep_put16(ddi_acc_handle_t handle, uint16_t *host_addr,
     uint16_t *dev_addr, size_t repcount, uint_t flags);
```

```
void ddi_rep_put32(ddi_acc_handle_t handle, uint32_t *host_addr,
     uint32_t *dev_addr, size_t repcount, uint_t flags);
```

```
void ddi_rep_put64(ddi_acc_handle_t handle, uint64_t *host_addr,
     uint64_t *dev_addr, size_t repcount, uint_t flags);
```

INTERFACE LEVEL

Solaris DDI specific (Solaris DDI).

PARAMETERS

handle The data access handle returned from setup calls, such as `ddi_regs_map_setup`(9F).

host_addr Base host address.

dev_addr Base device address.

repcount Number of data accesses to perform.

flags Device address flags:

`DDI_DEV_AUTOINCR`
: Automatically increment the device address, *dev_addr*, during data accesses.

`DDI_DEV_NO_AUTOINCR`
: Do not advance the device address, *dev_addr*, during data accesses.

DESCRIPTION

These routines generate multiple writes to the mapped memory or device register. *repcount* data is copied from the host address, *host_addr*, to the device address, *dev_addr*. For each input datum, the `ddi_rep_put8()`, `ddi_rep_put16()`, `ddi_rep_put32()`, and `ddi_rep_put64()` functions write 8 bits, 16 bits, 32 bits, and 64 bits of data, respectively, to the device address, *dev_addr*. *dev_addr* and *host_addr* must be aligned to the datum boundary described by the function.

Each individual datum will automatically be translated to maintain a consistent view between the host and the device based on the encoded information in the data access handle. The translation may involve byte-swapping if the host and the device have incompatible endian characteristics.

When the *flags* argument is set to DDI_DEV_AUTOINCR, these functions treat the device address, *dev_addr*, as a memory buffer location on the device and increment its address on the next input datum. However, when the *flags* argument is set to DDI_DEV_NO_AUTOINCR, the same device address will be used for every datum access. For example, this flag may be useful when writing to a data register.

CONTEXT

These functions can be called from user, kernel, or interrupt context.

SEE ALSO

ddi_get8(9F), ddi_put8(9F), ddi_regs_map_free(9F), ddi_regs_map_setup(9F), ddi_rep_get8(9F), ddi_device_acc_attr(9S)

NOTES

The functions described in this manual page previously used symbolic names which specified their data access size; the function names have been changed so they now specify a fixed-width data size. See the following table for the new name equivalents:

Previous Name	New Name
ddi_rep_putb	ddi_rep_put8
ddi_rep_putw	ddi_rep_put16
ddi_rep_putl	ddi_rep_put32
ddi_rep_putll	ddi_rep_put64

NAME

ddi_root_node – get the root of the dev_info tree

SYNOPSIS

```
#include <sys/conf.h>
#include <sys/ddi.h>
#include <sys/sunddi.h>

dev_info_t *ddi_root_node(void);
```

INTERFACE LEVEL

Solaris DDI specific (Solaris DDI).

DESCRIPTION

`ddi_root_node()` returns a pointer to the root node of the device information tree.

RETURN VALUES

`ddi_root_node()` returns a pointer to a device information structure.

CONTEXT

`ddi_root_node()` can be called from user or interrupt context.

SEE ALSO

Writing Device Drivers

NAME

ddi_segmap, ddi_segmap_setup – set up a user mapping using seg_dev

SYNOPSIS

```
#include <sys/conf.h>
#include <sys/ddi.h>
#include <sys/sunddi.h>
```

```
int ddi_segmap(dev_t dev, off_t offset, struct as *asp, caddr_t *addrp,
     off_t len, uint_t prot, uint_t maxprot, uint_t flags, cred_t *credp);
```

```
int ddi_segmap_setup(dev_t dev, off_t offset, struct as *asp, caddr_t
     *addrp, off_t len, uint_t prot, uint_t maxprot, uint_t flags, cred_t
     *credp, ddi_device_acc_attr_t *accattrp, uint_t rnumber);
```

INTERFACE LEVEL

Solaris DDI specific (Solaris DDI).

PARAMETERS

dev The device whose memory is to be mapped.

offset The offset within device memory at which the mapping begins.

asp An opaque pointer to the user address space into which the device memory should be mapped.

addrp Pointer to the starting address within the user address space to which the device memory should be mapped.

len Length (in bytes) of the memory to be mapped.

prot A bit field that specifies the protections. Some combinations of possible settings are:

`PROT_READ`
Read access is desired.

`PROT_WRITE`
Write access is desired.

`PROT_EXEC`
Execute access is desired.

`PROT_USER`
User-level access is desired (the mapping is being done as a result of a `mmap`(2) system call).

`PROT_ALL`
All access is desired.

maxprot Maximum protection flag possible for attempted mapping (the `PROT_WRITE` bit may be masked out if the user opened the special file read-only). If `(maxprot & prot) != prot` then there is an access violation.

flags Flags indicating type of mapping. Possible values are (other bits may be set):

`MAP_PRIVATE`
Changes are private.

`MAP_SHARED`
Changes should be shared.

`MAP_FIXED`
The user specified an address in **addrp* rather than letting the system pick and address.

credp Pointer to user credential structure.

ddi_segmap_setup( )

dev_acc_attr Pointer to a `ddi_device_acc_attr`(9S) structure which contains the device access attributes to apply to this mapping.

rnumber Index number to the register address space set.

DESCRIPTION

Future releases of Solaris will provide this function for binary and source compatibility. However, for increased functionality, use `ddi_devmap_segmap`(9F) instead. See `ddi_devmap_segmap`(9F) for details.

`ddi_segmap`( ) and `ddi_segmap_setup()` set up user mappings to device space. When setting up the mapping, the `ddi_segmap`( ) and `ddi_segmap_setup()` routines call the `mmap`(9E) entry point to validate the range to be mapped. When a user process accesses the mapping, the drivers `mmap`(9E) entry point is again called to retrieve the page frame number that needs to be loaded. The mapping translations for that page are then loaded on behalf of the driver by the DDI framework.

`ddi_segmap()` is typically used as the `segmap`(9E) entry in the `cb_ops`(9S) structure for those devices that do not choose to provide their own `segmap`(9E) entry point. However, some drivers may have their own `segmap`(9E) entry point to do some initial processing on the parameters and then call `ddi_segmap()` to establish the default memory mapping.

`ddi_segmap_setup()` is used in the drivers `segmap`(9E) entry point to set up the mapping and assign device access attributes to that mapping. *rnumber* specifies the register set representing the range of device memory being mapped. See `ddi_device_acc_attr`(9S) for details regarding what device access attributes are available.

`ddi_segmap_setup()` cannot be used directly in the `cb_ops`(9S) structure and requires a driver to have a `segmap`(9E) entry point.

RETURN VALUES

`ddi_segmap()` and `ddi_segmap_setup()` return the following values:

`0` Successful completion.

`Non-zero` An error occurred. In particular, they return `ENXIO` if the range to be mapped is invalid.

CONTEXT

`ddi_segmap()` and `ddi_segmap_setup()` can be called from user or kernel context only.

SEE ALSO

`mmap`(2), `mmap`(9E), `segmap`(9E), `ddi_mapdev`(9F), `cb_ops`(9S), `ddi_device_acc_attr`(9S)

NOTES

If driver notification of user accesses to the mappings is required, the driver should use `ddi_mapdev`(9F) instead.

NAME

ddi_slaveonly – tell if a device is installed in a slave access only location

SYNOPSIS

```
#include <sys/conf.h>
#include <sys/ddi.h>
#include <sys/sunddi.h>

int ddi_slaveonly(dev_info_t *dip);
```

INTERFACE LEVEL

Solaris DDI specific (Solaris DDI).

PARAMETERS

dip A pointer to the device's `dev_info` structure.

DESCRIPTION

`ddi_slaveonly()` tells the caller if the bus, or part of the bus that the device is installed on, does not permit the device to become a DMA master, that is, whether the device has been installed in a slave access only slot.

RETURN VALUES

`DDI_SUCCESS` The device has been installed in a slave access only location.

`DDI_FAILURE` The device has not been installed in a slave access only location.

CONTEXT

`ddi_slaveonly()` can be called from user or interrupt context.

SEE ALSO

Writing Device Drivers

NAME

ddi_soft_state, ddi_get_soft_state, ddi_soft_state_fini, ddi_soft_state_free, ddi_soft_state_init, ddi_soft_state_zalloc – driver soft state utility routines

SYNOPSIS

```
#include <sys/ddi.h>
#include <sys/sunddi.h>
```

```
void *ddi_get_soft_state(void *state, int item);
```

```
void ddi_soft_state_fini(void **state_p);
```

```
void ddi_soft_state_free(void *state, int item);
```

```
int ddi_soft_state_init(void **state_p, size_t size, size_t n_items);
```

```
int ddi_soft_state_zalloc(void *state, int item);
```

INTERFACE LEVEL

Solaris DDI specific (Solaris DDI).

PARAMETERS

state_p Address of the opaque state pointer which will be initialized by `ddi_soft_state_init()` to point to implementation dependent data.

size Size of the item which will be allocated by subsequent calls to `ddi_soft_state_zalloc()`.

n_items A hint of the number of items which will be preallocated; zero is allowed.

state An opaque pointer to implementation-dependent data that describes the soft state.

item The item number for the state structure; usually the instance number of the associated devinfo node.

DESCRIPTION

Most device drivers maintain state information with each instance of the device they control; for example, a soft copy of a device control register, a mutex that must be held while accessing a piece of hardware, a partition table, or a unit structure. These utility routines are intended to help device drivers manage the space used by the driver to hold such state information.

For example, if the driver holds the state of each instance in a single state structure, these routines can be used to dynamically allocate and deallocate a separate structure for each instance of the driver as the instance is attached and detached.

To use the routines, the driver writer needs to declare a state pointer, *state_p*, which the implementation uses as a place to hang a set of per-driver structures; everything else is managed by these routines.

The routine `ddi_soft_state_init()` is usually called in the drivers `_init`(9E) routine to initialize the state pointer, set the size of the soft state structure, and to allow the driver to pre-allocate a given number of such structures if required.

The routine `ddi_soft_state_zalloc()` is usually called in the drivers `attach`(9E) routine. The routine is passed an item number which is used to refer to the structure in subsequent calls to `ddi_get_soft_state()` and `ddi_soft_state_free()`. The

item number is usually just the instance number of the devinfo node, obtained with `ddi_get_instance`(9F). The routine attempts to allocate space for the new structure, and if the space allocation was successful, `DDI_SUCCESS` is returned to the caller.

A pointer to the space previously allocated for a soft state structure can be obtained by calling `ddi_get_soft_state()` with the appropriate item number.

The space used by a given soft state structure can be returned to the system using `ddi_soft_state_free()`. This routine is usually called from the drivers `detach`(9E) entry point.

The space used by all the soft state structures allocated on a given state pointer, together with the housekeeping information used by the implementation can be returned to the system using `ddi_soft_state_fini()`. This routine can be called from the drivers `_fini`(9E) routine.

The `ddi_soft_state_zalloc()`, `ddi_soft_state_free()` and `ddi_get_soft_state()` routines coordinate access to the underlying data structures in an MT-safe fashion, thus no additional locks should be necessary.

RETURN VALUES

`ddi_get_soft_state()`

`NULL`	The requested state structure was not allocated at the time of the call.
pointer	The pointer to the state structure.

`ddi_soft_state_init()`

`0`	The allocation was successful.
`EINVAL`	Either the `size` parameter was zero, or the *state_p* parameter was invalid.

`ddi_soft_state_zalloc()`

`DDI_SUCCESS`	The allocation was successful.
`DDI_FAILURE`	The routine failed to allocate the storage required; either the *state* parameter was invalid, the item number was negative, or an attempt was made to allocate an item number that was already allocated.

CONTEXT

`ddi_soft_state_init()`, and `ddi_soft_state_alloc()` can be called from user context only, since they may internally call `kmem_zalloc`(9F) with the `KM_SLEEP` flag.

The `ddi_soft_state_fini()`, `ddi_soft_state_free()` and `ddi_get_soft_state()` routines can be called from any driver context.

EXAMPLES

EXAMPLE 1 Creating and Removing Data Structures

The following example shows how the routines described above can be used in terms of the driver entry points of a character-only driver. The example concentrates on the portions of the code that deal with creating and removing the driver's data structures.

```
typedef struct {
   volatile caddr_t *csr;        /* device registers */
   kmutex_t         csr_mutex;   /* protects 'csr' field */
   unsigned int     state;
   dev_info_t       *dip;        /* back pointer to devinfo */
} devstate_t;
static void *statep;

int
_init(void)
{
   int error;

   error = ddi_soft_state_init(&statep, sizeof (devstate_t), 0);
   if (error != 0)
           return (error);
   if ((error = mod_install(&modlinkage)) != 0)
           ddi_soft_state_fini(&statep);
   return (error);
}

int
_fini(void)
{
   int error;

   if ((error = mod_remove(&modlinkage)) != 0)
           return (error);
   ddi_soft_state_fini(&statep);
   return (0);
}

static int
xxattach(dev_info_t *dip, ddi_attach_cmd_t cmd)
{
   int instance;
   devstate_t *softc;

   switch (cmd) {
   case DDI_ATTACH:
          instance = ddi_get_instance(dip);
      if (ddi_soft_state_zalloc(statep, instance) != DDI_SUCCESS)
             return (DDI_FAILURE);
          softc = ddi_get_soft_state(statep, instance);
          softc->dip = dip;
          ...
          return (DDI_SUCCESS);
   default:
          return (DDI_FAILURE);
   }
}
```

EXAMPLE 1 Creating and Removing Data Structures *(Continued)*

```
static int
xxdetach(dev_info_t *dip, ddi_detach_cmd_t cmd)
{
   int instance;

   switch (cmd) {

   case DDI_DETACH:
          instance = ddi_get_instance(dip);
          ...
      ddi_soft_state_free(statep, instance);
      return (DDI_SUCCESS);

   default:
      return (DDI_FAILURE);
   }
}

static int
xxopen(dev_t *devp, int flag, int otyp, cred_t *cred_p)
{
   devstate_t *softc;
   int   instance;

   instance = getminor(*devp);
   if ((softc = ddi_get_soft_state(statep, instance)) == NULL)
          return (ENXIO);
   ...
   softc->state |= XX_IN_USE;
   ...
   return (0);
}
```

SEE ALSO

`_fini`(9E), `_init`(9E), `attach`(9E), `detach`(9E), `ddi_get_instance`(9F), `getminor`(9F), `kmem_zalloc`(9F)

Writing Device Drivers

WARNINGS

There is no attempt to validate the `item` parameter given to `ddi_soft_state_zalloc()` other than it must be a positive signed integer. Therefore very large item numbers may cause the driver to hang forever waiting for virtual memory resources that can never be satisfied.

NOTES

If necessary, a hierarchy of state structures can be constructed by embedding state pointers in higher order state structures.

DIAGNOSTICS

All of the messages described below usually indicate bugs in the driver and should not appear in normal operation of the system.

```
WARNING: ddi_soft_state_zalloc: bad handle
WARNING: ddi_soft_state_free: bad handle
WARNING: ddi_soft_state_fini: bad handle
```

The implementation-dependent information kept in the state variable is corrupt.

```
WARNING: ddi_soft_state_free: null handle
WARNING: ddi_soft_state_fini: null handle
```

The routine has been passed a null or corrupt state pointer. Check that `ddi_soft_state_init()` has been called.

```
WARNING: ddi_soft_state_free: item %d not in range [0..%d]
```

The routine has been asked to free an item which was never allocated. The message prints out the invalid item number and the acceptable range.

NAME

ddi_umem_alloc, ddi_umem_free – allocate and free page-aligned kernel memory

SYNOPSIS

```
#include <sys/types.h>
 #include <sys/sunddi.h>

void *ddi_umem_alloc(size_t size, int flag, ddi_umem_cookie_t
     *cookiep);

void ddi_umem_free(ddi_umem_cookie_t cookie);
```

INTERFACE LEVEL

Solaris DDI specific (Solaris DDI).

PARAMETERS

ddi_umem_alloc()

size Number of bytes to allocate.

flag Used to determine the sleep and pageable conditions.

Possible sleep flags are `DDI_UMEM_SLEEP`, which allows sleeping until memory is available, and `DDI_UMEM_NOSLEEP`, which returns `NULL` immediately if memory is not available.

The default condition is to allocate locked memory; this can be changed to allocate pageable memory using the `DDI_UMEM_PAGEABLE` flag.

cookiep Pointer to a kernel memory cookie.

ddi_umem_free()

cookie A kernel memory cookie allocated in `ddi_umem_alloc()`.

DESCRIPTION

`ddi_umem_alloc()` allocates page-aligned kernel memory and returns a pointer to the allocated memory. The number of bytes allocated is a multiple of the system page size (roundup of *size*). The allocated memory can be used in the kernel and can be exported to user space. See `devmap`(9E) and `devmap_umem_setup`(9F) for further information.

flag determines whether the caller can sleep for memory and whether the allocated memory is locked or not. `DDI_UMEM_SLEEP` allocations may sleep but are guaranteed to succeed. `DDI_UMEM_NOSLEEP` allocations do not sleep but may fail (return `NULL`) if memory is currently unavailable. If `DDI_UMEM_PAGEABLE` is set, pageable memory will be allocated. These pages can be swapped out to secondary memory devices. The initial contents of memory allocated using `ddi_umem_alloc()` is zero-filled.

**cookiep* is a pointer to the kernel memory cookie that describes the kernel memory being allocated. A typical use of *cookiep* is in `devmap_umem_setup`(9F) when the drivers want to export the kernel memory to a user application.

To free the allocated memory, a driver calls `ddi_umem_free()` with the cookie obtained from `ddi_umem_alloc()`. `ddi_umem_free()` releases the entire buffer.

RETURN VALUES

`Non-null` Successful completion.`ddi_umem_alloc()` returns a pointer to the allocated memory.

NULL	Memory cannot be allocated by ddi_umem_alloc() because DDI_UMEM_NOSLEEP is set and the system is out of resources.

CONTEXT

ddi_umem_alloc() can be called from any context if *flag* is set to DDI_UMEM_NOSLEEP. If DDI_UMEM_SLEEP is set, ddi_umem_alloc() can be called from user and kernel context only. ddi_umem_free() can be called from any context.

SEE ALSO

devmap(9E), condvar(9F), devmap_umem_setup(9F), kmem_alloc(9F), mutex(9F), rwlock(9F), semaphore(9F)

Writing Device Drivers

WARNINGS

Setting the DDI_UMEM_PAGEABLE flag in ddi_umem_alloc() will result in an allocation of pageable memory. Because these pages can be swapped out to secondary memory devices, drivers should use this flag with care. This memory should not be used for synchronization objects such as locks and condition variables. See mutex(9F), semaphore(9F), rwlock(9F), and condvar(9F). This memory also should not be accessed in the driver interrupt routines.

Memory allocated using ddi_umem_alloc() without setting DDI_UMEM_PAGEABLE flag cannot be paged. Available memory is therefore limited by the total physical memory on the system. It is also limited by the available kernel virtual address space, which is often the more restrictive constraint on large-memory configurations.

Excessive use of kernel memory is likely to effect overall system performance. Over-commitment of kernel memory may cause unpredictable consequences.

Misuse of the kernel memory allocator, such as writing past the end of a buffer, using a buffer after freeing it, freeing a buffer twice, or freeing an invalid pointer, will cause the system to corrupt data or panic.

NOTES

ddi_umem_alloc(0, *flag*, *cookiep*) always returns NULL. ddi_umem_free(NULL) has no effects on system.

NAME

ddi_umem_iosetup – Setup I/O requests to application memory

SYNOPSIS

```
#include <sys/ddi.h>
#include <sys/sunddi.h>

struct buf *ddi_umem_iosetup(ddi_umem_cookie_t cookie,off_t off,
     size_t len, int direction, dev_t dev, daddr_t blkno, int (*iodone)
     (struct buf *), int sleepflag);
```

INTERFACE LEVEL

Solaris DDI specific (Solaris DDI)

PARAMETERS

cookie The kernel memory cookie allocated by `ddi_umem_lock`(9F).

off Offset from the start of the cookie.

len Length of the I/O request in bytes.

direction Must be set to `B_READ` for reads from the device or `B_WRITE` for writes to the device.

dev Device number

blkno Block number on device.

iodone Specific `biodone`(9F) routine.

sleepflag Determines whether caller can sleep for memory. Possible flags are `DDI_UMEM_SLEEP` to allow sleeping until memory is available, or `DDI_UMEM_NOSLEEP` to return `NULL` immediately if memory is not available.

DESCRIPTION

The `ddi_umem_iosetup`(9F) function is used by drivers to setup I/O requests to application memory which has been locked down using `ddi_umem_lock`(9F).

The `ddi_umem_iosetup`(9F) function returns a pointer to a `buf`(9S) structure corresponding to the memory cookie *cookie*. Drivers can setup multiple buffer structures simultaneously active using the same memory cookie. The `buf`(9S) structures can span all or part of the region represented by the cookie and can overlap each other. The `buf`(9S) structure can be passed to `ddi_dma_buf_bind_handle`(9F) to initiate DMA transfers to or from the locked down memory.

The *off* parameter specifies the offset from the start of the cookie. The *len* parameter represents the length of region to be mapped by the buffer. The *direction* parameter can be set to `B_READ` or `B_WRITE` to indicate the action that will be performed by the device. (Note that this direction is in the opposite sense of the VM system's direction of `DDI_UMEMLOCK_READ` and `DDI_UMEMLOCK_WRITE`.) The direction must be compatible with the flags used to create the memory cookie in `ddi_umem_lock`(9F).

The *dev* parameter specifies the device to which the buffer is to perform I/O.The *blkno* parameter represents the block number on the device. It will be assigned to the `b_blkno` field of the returned buffer structure. The *iodone* parameter enables the driver to identify a specific `biodone`(9F) routine to be called by the driver when the

I/O is complete. The *sleepflag* parameter determines if the caller can sleep for memory. DDI_UMEM_SLEEP allocations may sleep but are guaranteed to succeed. DDI_UMEM_NOSLEEP allocations do not sleep but may fail (return NULL) if memory is currently not available.

After the I/O has completed and the buffer structure is no longer needed, the driver calls freerbuf(9F) to free the buffer structure.

RETURN VALUES

The ddi_umem_iosetup(9F) function returns a pointer to the initialized buffer header, or NULL if no space is available.

CONTEXT

The ddi_umem_iosetup(9F) function can be called from any context only if flag is set to DDI_UMEM_NOSLEEP. If DDI_UMEM_SLEEP is set, ddi_umem_iosetup(9F) can be called from user and kernel context only.

SEE ALSO

ddi_umem_lock(9F), ddi_dma_buf_bind_handle(9F), ddi_umem_unlock(9F), freerbuf(9F), physio(9F), buf(9S)

NAME

ddi_umem_lock, ddi_umem_unlock – Locks and unlocks memory pages

SYNOPSIS

```
#include <sys/ddi.h>
#include <sys/sunddi.h>

int ddi_umem_lock(caddr_t addr, size_t len, int flags,
    ddi_umem_cookie_t *cookiep);

void ddi_umem_unlock(ddi_umem_cookie_t cookie);
```

INTERFACE LEVEL

Solaris DDI specific (Solaris DDI)

PARAMETERS

ddi_umem_lock

addr Virtual address of memory object

len Length of memory object in bytes

flags Valid flags include:

DDI_UMEMLOCK_READ Memory pages are locked to be read from. (Disk write or a network send.)

DDI_UMEMLOCK_WRITE Memory pages are locked to be written to. (Disk read or a network receive.)

cookiep Pointer to a kernel memory cookie.

ddi_umem_unlock

cookie Kernel memory cookie allocated by `ddi_umem_lock()`.

DESCRIPTION

The `ddi_umem_lock`(9F) function locks down the physical pages (including I/O pages) that correspond to the current process' virtual address range [addr, addr + size) and fills in a cookie representing the locked pages. This cookie can be used to create a `buf`(9S) structure that can be used to perform I/O (see `ddi_umem_iosetup`(9F) and `ddi_dma_buf_bind_handle`(9F)), or it can be used with `devmap_umem_setup`(9F) to export the memory to an application.

The flags argument indicates the intended use of the locked memory. Set flags to `DDI_UMEMLOCK_READ` if the memory pages will be read (for example, in a disk write or a network send.) Set flags to `DDI_UMEMLOCK_WRITE` if the memory pages will be written (for example, in a disk read or a network receive).

To unlock the locked pages, the drivers call `ddi_umem_unlock`(9F) with the cookie obtained from `ddi_umem_lock`(9F).

The process is not allowed to `exec`(2) or `fork`(2) while its physical pages are locked down by the device driver.

The device driver must ensure that the physical pages have been unlocked after the application has called `close`(2).

RETURN VALUES

On success, a `0` is returned. Otherwise, one of the following errno values is returned.

`EFAULT`	User process has no mapping at that address range or does not support locking
`EACCES`	User process does not have the required permission.
`ENOMEM`	The system does not have sufficient resources to lock memory.

CONTEXT

The `ddi_umem_lock`(9F) and `ddi_umem_unlock`(9F) functions can be called from user context only.

SEE ALSO

`ddi_umem_iosetup`(9F), `ddi_dma_buf_bind_handle`(9F), `devmap_umem_setup`(9F), `ddi_umem_alloc`(9F)

NOTES

The `ddi_umem_lock`(9F) function consumes physical memory. The driver is responsible for a speedy unlock to free up the resources.

NAME

delay – delay execution for a specified number of clock ticks

SYNOPSIS

```
#include <sys/ddi.h>

void delay(clock_t ticks);
```

INTERFACE LEVEL

Architecture independent level 1 (DDI/DKI).

PARAMETERS

ticks The number of clock cycles to delay.

DESCRIPTION

`delay()` provides a mechanism for a driver to delay its execution for a given period of time. Since the speed of the clock varies among systems, drivers should base their time values on microseconds and use `drv_usectohz`(9F) to convert microseconds into clock ticks.

`delay()` uses `timeout`(9F) to schedule an internal function to be called after the specified amount of time has elapsed. `delay()` then waits until the function is called. Because `timeout()` is subject to priority inversion, drivers waiting on behalf of processes with real-time constraints should use `cv_timedwait`(9F) rather than `delay()`.

`delay()` does not busy-wait. If busy-waiting is required, use `drv_usecwait`(9F).

CONTEXT

`delay()` can be called from user and kernel contexts.

EXAMPLES

EXAMPLE 1 `delay()` Example

Before a driver I/O routine allocates buffers and stores any user data in them, it checks the status of the device (line 12). If the device needs manual intervention (such as, needing to be refilled with paper), a message is displayed on the system console (line 14). The driver waits an allotted time (line 17) before repeating the procedure.

```
 1  struct  device  {    /* layout of physical device registers */
 2          int      control;    /* physical device control word */
 3          int      status;    /* physical device status word */
 4          short    xmit_char;    /* transmit character to device */
 5  };
 6
 7
       . . .
 9    /* get device registers  */
10      register struct device *rp = ...
11
12      while (rp->status & NOPAPER) {     /* while printer is out of paper */
13        /* display message and ring bell */
          /* on system console */
14          cmn_err(CE_WARN, "^\007",
15                            (getminor(dev) & 0xf));
16          /* wait one minute and try again */
17          delay(60 * drv_usectohz(1000000));
18      }
```

EXAMPLE 1 `delay()` Example *(Continued)*

SEE ALSO

`biodone`(9F), `biowait`(9F), `cv_timedwait`(9F), `ddi_in_panic`(9F), `drv_hztousec`(9F), `drv_usectohz`(9F), `drv_usecwait`(9F), `timeout`(9F), `untimeout`(9F)

Writing Device Drivers

NAME

devmap_default_access – default driver memory access function

SYNOPSIS

```
#include <sys/ddi.h>
#include <sys/sunddi.h>


int devmap_default_access(devmap_cookie_t dhp, void *pvtp,
    offset_t off, size_t len, uint_t type, uint_t rw);
```

INTERFACE LEVEL

Solaris DDI specific (Solaris DDI).

PARAMETERS

dhp An opaque mapping handle that the system uses to describe the mapping.

pvtp Driver private mapping data.

off User offset within the logical device memory at which the access begins.

len Length (in bytes) of the memory being accessed.

type Type of access operation.

rw Type of access.

DESCRIPTION

`devmap_default_access()` is a function providing the semantics of `devmap_access`(9E). The drivers call `devmap_default_access()` to handle the mappings that do not support context switching. The drivers should call `devmap_do_ctxmgt`(9F) for the mappings that support context management.

`devmap_default_access()` can either be called from `devmap_access`(9E) or be used as the `devmap_access`(9E) entry point. The arguments *dhp*, *pvtp*, *off*, *len*, *type*, and *rw* are provided by the `devmap_access`(9E) entry point and must not be modified.

RETURN VALUES

`0` Successful completion.

`Non-zero` An error occurred.

CONTEXT

`devmap_default_access()` must be called from the driver's `devmap_access`(9E) entry point.

EXAMPLES

EXAMPLE 1 Using devmap_default_access in devmap_access.

The following shows an example of using `devmap_default_access()` in the `devmap_access`(9E) entry point.

```
. . .
#define OFF_DO_CTXMGT  0x40000000
#define OFF_NORMAL     0x40100000
#define CTXMGT_SIZE    0x100000
#define NORMAL_SIZE    0x100000

/*
 * Driver devmap_contextmgt(9E) callback function.
 */
static int
xx_context_mgt(devmap_cookie_t dhp, void *pvtp, offset_t offset,
```

EXAMPLE 1 Using devmap_default_access in devmap_access. *(Continued)*

```
    size_t length, uint_t type, uint_t rw)
{
    ......
    /*
     * see devmap_contextmgt(9E) for an example
     */
}

/*
 * Driver devmap_access(9E) entry point
 */
static int
xxdevmap_access(devmap_cookie_t dhp, void *pvtp, offset_t off,
    size_t len, uint_t type, uint_t rw)
{
    offset_t diff;
    int err;

    /*
     * check if off is within the range that supports
     * context management.
     */
    if ((diff = off - OFF_DO_CTXMG) >= 0 && diff < CTXMGT_SIZE) {
        /*
         * calculates the length for context switching
         */
        if ((len + off) > (OFF_DO_CTXMGT + CTXMGT_SIZE))
            return (-1);
        /*
         * perform context switching
         */
        err = devmap_do_ctxmgt(dhp, pvtp, off, len, type,
            rw,  xx_context_mgt);
    /*
     * check if off is within the range that does normal
     * memory mapping.
     */
    } else if ((diff = off - OFF_NORMAL) >= 0 && diff < NORMAL_SIZE) {
        if ((len + off) > (OFF_NORMAL + NORMAL_SIZE))
            return (-1);
        err = devmap_default_access(dhp, pvtp, off, len, type, rw);
    } else
        return (-1);

    return (err);
}
```

SEE ALSO `devmap_access`(9E), `devmap_do_ctxmgt`(9F), `devmap_callback_ctl`(9S)

Writing Device Drivers

NAME

devmap_devmem_setup, devmap_umem_setup – set driver memory mapping parameters

SYNOPSIS

```
#include <sys/ddi.h>
#include <sys/sunddi.h>
```

```
int devmap_devmem_setup(devmap_cookie_t dhp, dev_info_t *dip,
    struct devmap_callback_ctl *callbackops, uint_t rnumber, offset_t
    roff, size_t len, uint_t maxprot, uint_t flags,
    ddi_device_acc_attr_t *accattrp);
```

```
intdevmap_umem_setup(devmap_cookie_t dhp, dev_info_t *dip, struct
    devmap_callback_ctl * callbackops, ddi_umem_cookie_t cookie,
    offset_t koff, size_t len, uint_t maxprot, uint_t flags,
    ddi_device_acc_attr_t *accattrp);
```

INTERFACE LEVEL

Solaris DDI specific (Solaris DDI).

PARAMETERS

devmap_devmem_setup()

dhp An opaque mapping handle that the system uses to describe the mapping.

dip Pointer to the device's `dev_info` structure.

callbackops Pointer to a `devmap_callback_ctl`(9S) structure. The structure contains pointers to device driver-supplied functions that manage events on the device mapping. The framework will copy the structure to the system private memory.

rnumber Index number to the register address space set.

roff Offset into the register address space.

len Length (in bytes) of the mapping to be mapped.

maxprot Maximum protection flag possible for attempted mapping. Some combinations of possible settings are:

- `PROT_READ` Read access is allowed.
- `PROT_WRITE` Write access is allowed.
- `PROT_EXEC` Execute access is allowed.
- `PROT_USER` User-level access is allowed (the mapping is being done as a result of a `mmap`(2) system call).
- `PROT_ALL` All access is allowed.

flags Must be set to `0`.

accattrp Pointer to a `ddi_device_acc_attr`(9S) structure. The structure contains the device access attributes to be applied to this range of memory.

devmap_umem_setup()

dhp An opaque data structure that the system uses to describe the mapping.

dip Pointer to the device's `dev_info` structure.

callbackops Pointer to a `devmap_callback_ctl`(9S) structure. The structure contains pointers to device driver-supplied functions that manage events on the device mapping.

cookie A kernel memory *cookie* (see `ddi_umem_alloc`(9F)).

koff Offset into the kernel memory defined by *cookie*.

len Length (in bytes) of the mapping to be mapped.

maxprot Maximum protection flag possible for attempted mapping. Some combinations of possible settings are:

`PROT_READ`	Read access is allowed.
`PROT_WRITE`	Write access is allowed.
`PROT_EXEC`	Execute access is allowed.
`PROT_USER`	User-level access is allowed (the mapping is being done as a result of a `mmap`(2) system call).
`PROT_ALL`	All access is allowed.

flags Must be set to `0`.

accattrp Pointer to a `ddi_device_acc_attr`(9S) structure. The structure contains the device access attributes to be applied to this range of memory.

DESCRIPTION

`devmap_devmem_setup()` and `devmap_umem_setup()` are used in the `devmap`(9E) entry point to pass mapping parameters from the driver to the system.

dhp is a device mapping handle that the system uses to store all mapping parameters of a physical contiguous memory. The system copies the data pointed to by *callbackops* to a system private memory. This allows the driver to free the data after returning from either `devmap_devmem_setup()` or `devmap_umem_setup()`. The driver is notified of user events on the mappings via the entry points defined by `devmap_callback_ctl`(9S). The driver is notified of the following user events:

Mapping Setup	User has called `mmap`(2) to create a mapping to the device memory.
Access	User has accessed an address in the mapping that has no translations.
Duplication	User has duplicated the mapping. Mappings are duplicated when the process calls `fork`(2).
Unmapping	User has called `munmap`(2) on the mapping or is exiting, `exit`(2).

See devmap_map(9E), devmap_access(9E), devmap_dup(9E), and devmap_unmap(9E) for details on these entry points.

By specifying a valid *callbackops* to the system, device drivers can manage events on a device mapping. For example, the devmap_access(9E) entry point allows the drivers to perform context switching by unloading the mappings of other processes and to load the mapping of the calling process. Device drivers may specify NULL to *callbackops* which means the drivers do not want to be notified by the system.

The maximum protection allowed for the mapping is specified in *maxprot*. *accattrp* defines the device access attributes. See ddi_device_acc_attr(9S) for more details.

devmap_devmem_setup() is used for device memory to map in the register set given by *rnumber* and the offset into the register address space given by *roff*. The system uses *rnumber* and *roff* to go up the device tree to get the physical address that corresponds to *roff*. The range to be affected is defined by *len* and *roff*. The range from *roff* to *roff* + *len* must be a physical contiguous memory and page aligned.

Drivers use devmap_umem_setup() for kernel memory to map in the kernel memory described by *cookie* and the offset into the kernel memory space given by *koff*. *cookie* is a kernel memory pointer obtained from ddi_umem_alloc(9F). If *cookie* is NULL, devmap_umem_setup() returns -1. The range to be affected is defined by *len* and *koff*. The range from *koff* to *koff* + *len* must be within the limits of the kernel memory described by *koff* + *len* and must be page aligned.

Drivers use devmap_umem_setup() to export the kernel memory allocated by ddi_umem_alloc(9F) to user space. The system selects a user virtual address that is aligned with the kernel virtual address being mapped to avoid cache incoherence if the mapping is not MAP_FIXED.

RETURN VALUES

0 Successful completion.

-1 An error occurred.

CONTEXT

devmap_devmem_setup() and devmap_umem_setup() can be called from user, kernel, and interrupt context.

SEE ALSO

exit(2), fork(2), mmap(2), munmap(2), devmap(9E), ddi_umem_alloc(9F), ddi_device_acc_attr(9S), devmap_callback_ctl(9S)

Writing Device Drivers

NAME

devmap_do_ctxmgt – perform device context switching on a mapping

SYNOPSIS

```
#include <sys/ddi.h>
#include <sys/sunddi.h>

int devmap_do_ctxmgt(devmap_cookie_t,dhp, void *pvtp, offset_t off,
     size_t len, uint_t type, uint_t rw, int (*devmap_contextmgt),
     (devmap_cookie_t,void *,offset_t,size_t,uint_t,uint_t));
```

INTERFACE LEVEL

Solaris DDI specific (Solaris DDI).

PARAMETERS

dhp An opaque mapping handle that the system uses to describe the mapping.

pvtp Driver private mapping data.

off User offset within the logical device memory at which the access begins.

len Length (in bytes) of the memory being accessed.

devmap_contextmgt The address of driver function that the system will call to perform context switching on a mapping. See `devmap_contextmgt`(9E) for details.

type Type of access operation. Provided by `devmap_access`(9E). Should not be modified.

rw Direction of access. Provided by `devmap_access`(9E). Should not be modified.

DESCRIPTION

Device drivers call `devmap_do_ctxmgt()` in the `devmap_access`(9E) entry point to perform device context switching on a mapping. `devmap_do_ctxmgt()` passes a pointer to a driver supplied callback function, `devmap_contextmgt`(9E), to the system that will perform the actual device context switching. If `devmap_contextmgt`(9E) is not a valid driver callback function, the system will fail the memory access operation which will result in a `SIGSEGV` or `SIGBUS` signal being delivered to the process.

`devmap_do_ctxmgt()` performs context switching on the mapping object identified by *dhp* and *pvtp* in the range specified by *off* and *len*. The arguments *dhp*, *pvtp*, *type*, and *rw* are provided by the `devmap_access`(9E) entry point and must not be modified. The range from *off* to *off+len* must support context switching.

The system will pass through *dhp*, *pvtp*, *off*, *len*, *type*, and *rw* to `devmap_contextmgt`(9E) in order to perform the actual device context switching. The return value from `devmap_contextmgt`(9E) will be returned directly to `devmap_do_ctxmgt()`.

RETURN VALUES

`0` Successful completion.

`Non-zero` An error occurred.

CONTEXT

`devmap_do_ctxmgt()` must be called from the driver's `devmap_access`(9E) entry point.

EXAMPLES

EXAMPLE 1 Using devmap_do_ctxmgt in the devmap_access entry point.

The following shows an example of using `devmap_do_ctxmgt()` in the `devmap_access`(9E) entry point.

```
. . .
#define OFF_DO_CTXMGT  0x40000000
#define OFF_NORMAL     0x40100000
#define CTXMGT_SIZE    0x100000
#define NORMAL_SIZE    0x100000

/*
 * Driver devmap_contextmgt(9E) callback function.
 */
static int
xx_context_mgt(devmap_cookie_t dhp, void *pvtp, offset_t offset,
    size_t length, uint_t type, uint_t rw)
{
    ......
    /*
     * see devmap_contextmgt(9E) for an example
     */
}

/*
 * Driver devmap_access(9E) entry point
 */
static int
xxdevmap_access(devmap_cookie_t dhp, void *pvtp, offset_t off,
    size_t len, uint_t type, uint_t rw)
{
    offset_t diff;
    int err;

    /*
     * check if off is within the range that supports
     * context management.
     */
    if ((diff = off - OFF_DO_CTXMG) >= 0 && diff < CTXMGT_SIZE) {
        /*
         * calculates the length for context switching
         */
        if ((len + off) > (OFF_DO_CTXMGT + CTXMGT_SIZE))
            return (-1);
        /*
         * perform context switching
         */
        err = devmap_do_ctxmgt(dhp, pvtp, off, len, type,
                    rw, xx_context_mgt);
    /*
     * check if off is within the range that does normal
     * memory mapping.
     */
```

EXAMPLE 1 Using devmap_do_ctxmgt in the devmap_access entry point. *(Continued)*

```
    } else if ((diff = off - OFF_NORMAL) >= 0 && diff < NORMAL_SIZE) {
        if ((len + off) > (OFF_NORMAL + NORMAL_SIZE))
            return (-1);
        err = devmap_default_access(dhp, pvtp, off, len, type, rw);
    } else
        return (-1);

    return (err);
}
```

SEE ALSO

`devmap_access`(9E), `devmap_contextmgt`(9E), `devmap_default_access`(9F)

Writing Device Drivers

NAME

devmap_set_ctx_timeout – set the timeout value for the context management callback

SYNOPSIS

```
#include <sys/ddi.h>
#include <sys/sunddi.h>

void devmap_set_ctx_timeout(devmap_cookie_t dhp, clock_t ticks);
```

INTERFACE LEVEL

Solaris DDI specific (Solaris DDI).

PARAMETERS

dhp An opaque mapping handle that the system uses to describe the mapping.

ticks Number of clock ticks to wait between successive calls to the context management callback function.

DESCRIPTION

`devmap_set_ctx_timeout()` specifies the time interval for the system to wait between successive calls to the driver's context management callback function, `devmap_contextmgt`(9E).

Device drivers typically call `devmap_set_ctx_timeout()` in the `devmap_map`(9E) routine. If the drivers do not call `devmap_set_ctx_timeout()` to set the timeout value, the default timeout value of `0` will result in no delay between successive calls to the driver's `devmap_contextmgt`(9E) callback function.

CONTEXT

`devmap_set_ctx_timeout()` can be called from user or interrupt context.

SEE ALSO

`devmap_contextmgt`(9E), `devmap_map`(9E), `timeout`(9F)

NAME

devmap_setup, ddi_devmap_segmap – set up a user mapping to device memory using the devmap framework

SYNOPSIS

```
#include <sys/ddi.h>
#include <sys/sunddi.h>
```

```
int devmap_setup(dev_t dev, offset_t off, ddi_as_handle_t as,
    caddr_t *addrp, size_tlen, uint_t prot, uint_t maxprot, uint_t
    flags, cred_t *cred);
```

```
int ddi_devmap_segmap(dev_t dev, off_t off, ddi_as_handle_t as,
    caddr_t *addrp, off_tlen, uint_t prot, uint_t maxprot, uint_t flags,
    cred_t *cred);
```

INTERFACE LEVEL

Solaris DDI specific (Solaris DDI).

PARAMETERS

dev Device whose memory is to be mapped.

off User offset within the logical device memory at which the mapping begins.

as An opaque data structure that describes the address space into which the device memory should be mapped.

addrp Pointer to the starting address in the address space into which the device memory should be mapped.

len Length (in bytes) of the memory to be mapped.

prot A bit field that specifies the protections. Some possible settings combinations are:

- `PROT_READ` Read access is desired.
- `PROT_WRITE` Write access is desired.
- `PROT_EXEC` Execute access is desired.
- `PROT_USER` User-level access is desired (the mapping is being done as a result of a `mmap`(2) system call).
- `PROT_ALL` All access is desired.

maxprot Maximum protection flag possible for attempted mapping; the `PROT_WRITE` bit may be masked out if the user opened the special file read-only.

flags Flags indicating type of mapping. The following flags can be specified:

- `MAP_PRIVATE` Changes are private.
- `MAP_SHARED` Changes should be shared.
- `MAP_FIXED` The user specified an address in **addrp* rather than letting the system choose an address.

cred Pointer to the user credential structure.

DESCRIPTION

`devmap_setup()` and `ddi_devmap_segmap()` allow device drivers to use the devmap framework to set up user mappings to device memory. The devmap framework provides several advantages over the default device mapping framework that is used by `ddi_segmap`(9F) or `ddi_segmap_setup`(9F). Device drivers should use the devmap framework, if the driver wants to:

- use an optimal MMU pagesize to minimize address translations,
- conserve kernel resources,
- receive callbacks to manage events on the mapping,
- export kernel memory to applications,
- set up device contexts for the user mapping if the device requires context switching,
- assign device access attributes to the user mapping, or
- change the maximum protection for the mapping.

`devmap_setup()` must be called in the `segmap`(9E) entry point to establish the mapping for the application. `ddi_devmap_segmap()` can be called in, or be used as, the `segmap`(9E) entry point. The differences between `devmap_setup()` and `ddi_devmap_segmap()` are in the data type used for *off* and *len*.

When setting up the mapping, `devmap_setup()` and `ddi_devmap_segmap()` call the `devmap`(9E) entry point to validate the range to be mapped. The `devmap`(9E) entry point also translates the logical offset (as seen by the application) to the corresponding physical offset within the device address space. If the driver does not provide its own `devmap`(9E) entry point, `EINVAL` will be returned to the `mmap`(2) system call.

RETURN VALUES

`0`	Successful completion.
`Non-zero`	An error occurred. The return value of `devmap_setup()` and `ddi_devmap_segmap()` should be used directly in the `segmap`(9E) entry point.

CONTEXT

`devmap_setup()` and `ddi_devmap_segmap()` can be called from user or kernel context only.

SEE ALSO

`mmap`(2), `devmap`(9E), `segmap`(9E), `ddi_segmap`(9F), `ddi_segmap_setup`(9F), `cb_ops`(9S)

Writing Device Drivers

NAME

devmap_unload, devmap_load – control validation of memory address translations

SYNOPSIS

```
#include <sys/ddi.h>
#include <sys/sunddi.h>

int devmap_load(devmap_cookie_t dhp, offset_t off, size_t len,
    uint_t type, uint_t rw);

int devmap_unload(devmap_cookie_t dhp, offset_t off, size_t len);
```

INTERFACE LEVEL

Solaris DDI specific (Solaris DDI).

PARAMETERS

dhp An opaque mapping handle that the system uses to describe the mapping.

off User offset within the logical device memory at which the loading or unloading of the address translations begins.

len Length (in bytes) of the range being affected.

devmap_load() only

type Type of access operation.

rw Direction of access.

DESCRIPTION

`devmap_unload()` and `devmap_load()` are used to control the validation of the memory mapping described by *dhp* in the specified range. `devmap_unload()` invalidates the mapping translations and will generate calls to the `devmap_access`(9E) entry point next time the mapping is accessed. The drivers use `devmap_load()` to validate the mapping translations during memory access.

A typical use of `devmap_unload()` and `devmap_load()` is in the driver's context management callback function, `devmap_contextmgt`(9E). To manage a device context, a device driver calls `devmap_unload()` on the context about to be switched out. It switches contexts, and then calls `devmap_load()` on the context switched in. `devmap_unload()` can be used to unload the mappings of other processes as well as the mappings of the calling process, but `devmap_load()` can only be used to load the mappings of the calling process. Attempting to load another process's mappings with `devmap_load()` will result in a system panic.

For both routines, the range to be affected is defined by the *off* and *len* arguments. Requests affect the entire page containing the *off* and all pages up to and including the page containing the last byte as indicated by *off* + *len*. The arguments *type* and *rw* are provided by the system to the calling function (for example, `devmap_contextmgt`(9E)) and should not be modified.

Supplying a value of `0` for the *len* argument affects all addresses from the *off* to the end of the mapping. Supplying a value of `0` for the *off* argument and a value of `0` for *len* argument affect all addresses in the mapping.

A non-zero return value from either `devmap_unload()` or `devmap_load()` will cause the corresponding operation to fail. The failure may result in a `SIGSEGV` or `SIGBUS` signal being delivered to the process.

RETURN VALUES

`0` Successful completion.

`Non-zero`	An error occurred.

CONTEXT

These routines can be called from user or kernel context only.

EXAMPLES

EXAMPLE 1 Managing a One-Page Device Context

The following shows an example of managing a device context that is one page in length.

```
struct xx_context cur_ctx;

static int
xxdevmap_contextmgt(devmap_cookie_t dhp, void *pvtp, offset_t off,
   size_t len, uint_t type, uint_t rw)
{
    int err;
    devmap_cookie_t cur_dhp;
    struct xx_pvt *p;
    struct xx_pvt *pvp = (struct xx_pvt *)pvtp;
    /* enable access callbacks for the current mapping */
    if (cur_ctx != NULL && cur_ctx != pvp->ctx) {
        p = cur_ctx->pvt;
        /*
         * unload the region from off to the end of the mapping.
         */
        cur_dhp = p->dhp;
        if ((err = devmap_unload(cur_dhp, off, len)) != 0)
            return (err);
    }
    /* Switch device context - device dependent*/
    ...
    /* Make handle the new current mapping */
    cur_ctx = pvp->ctx;
    /*
     * Disable callbacks and complete the access for the
     * mapping that generated this callback.
     */
    return (devmap_load(pvp->dhp, off, len, type, rw));
}
```

SEE ALSO

`devmap_access`(9E), `devmap_contextmgt`(9E)

Writing Device Drivers

NAME

disksort – single direction elevator seek sort for buffers

SYNOPSIS

```
#include <sys/conf.h>
#include <sys/ddi.h>
#include <sys/sunddi.h>
void
```

disksort(struct diskhd *dp, struct buf *bp);

INTERFACE LEVEL

Solaris DDI specific (Solaris DDI).

PARAMETERS

dp A pointer to a diskhd structure. A diskhd structure is essentially identical to head of a buffer structure (see buf(9S)). The only defined items of interest for this structure are the av_forw and av_back structure elements which are used to maintain the front and tail pointers of the forward linked I/O request queue.

bp A pointer to a buffer structure. Typically this is the I/O request that the driver receives in its strategy routine (see strategy(9E)). The driver is responsible for initializing the b_resid structure element to a meaningful sort key value prior to calling disksort().

DESCRIPTION

The function disksort() sorts a pointer to a buffer into a single forward linked list headed by the av_forw element of the argument *dp.

It uses a one-way elevator algorithm that sorts buffers into the queue in ascending order based upon a key value held in the argument buffer structure element b_resid.

This value can either be the driver calculated cylinder number for the I/O request described by the buffer argument, or simply the absolute logical block for the I/O request, depending on how fine grained the sort is desired to be or how applicable either quantity is to the device in question.

The head of the linked list is found by use of the av_forw structure element of the argument *dp. The tail of the linked list is found by use of the av_back structure element of the argument *dp. The av_forw element of the *bp argument is used by disksort() to maintain the forward linkage. The value at the head of the list presumably indicates the currently active disk area.

CONTEXT

This function can be called from user or interrupt context.

SEE ALSO

strategy(9E), buf(9S)

Writing Device Drivers

WARNINGS

disksort() does no locking. Therefore, any locking is completely the responsibility of the caller.

NAME

drv_getparm – retrieve kernel state information

SYNOPSIS

```
#include <sys/ddi.h>

int drv_getparm(unsigned int parm, void *value_p);
```

INTERFACE LEVEL

Architecture independent level 1 (DDI/DKI).

PARAMETERS

parm The kernel parameter to be obtained. Possible values are:

`LBOLT` Read the value of `lbolt`. `lbolt` is a `clock_t` that is unconditionally incremented by one at each clock tick. No special treatment is applied when this value overflows the maximum value of the signed integral type `clock_t`. When this occurs, its value will be negative, and its magnitude will be decreasing until it again passes zero. It can therefore not be relied upon to provide an indication of the amount of time that passes since the last system reboot, nor should it be used to mark an absolute time in the system. Only the difference between two measurements of `lbolt` is significant. It is used in this way inside the system kernel for timing purposes.

`PPGRP` Read the process group identification number. This number determines which processes should receive a `HANGUP` or `BREAK` signal when detected by a driver.

`UPROCP` Read the process table token value.

`PPID` Read process identification number.

`PSID` Read process session identification number.

`TIME` Read time in seconds.

`UCRED` Return a pointer to the caller's credential structure.

value_p A pointer to the data space in which the value of the parameter is to be copied.

DESCRIPTION

`drv_getparm()` function verifies that *parm* corresponds to a kernel parameter that may be read. If the value of *parm* does not correspond to a parameter or corresponds to a parameter that may not be read, `-1` is returned. Otherwise, the value of the parameter is stored in the data space pointed to by *value_p*.

`drv_getparm()` does not explicitly check to see whether the device has the appropriate context when the function is called and the function does not check for correct alignment in the data space pointed to by *value_p*. It is the responsibility of the driver writer to use this function only when it is appropriate to do so and to correctly declare the data space needed by the driver.

RETURN VALUES

`drv_getparm()` returns `0` to indicate success, `-1` to indicate failure. The value stored in the space pointed to by *value_p* is the value of the parameter if `0` is returned, or undefined if `-1` is returned. `-1` is returned if you specify a value other than `LBOLT`, `PPGRP`, `PPID`, `PSID`, `TIME`, `UCRED`, or `UPROCP`. Always check the return code when using this function.

CONTEXT

`drv_getparm()` can be called from user context only when using `PPGRP`, `PPID`, `PSID`, `UCRED`, or `UPROCP`. It can be called from user or interrupt context when using the `LBOLT` or `TIME` argument.

SEE ALSO

`buf`(9S)

Writing Device Drivers

NAME

drv_hztousec – convert clock ticks to microseconds

SYNOPSIS

```
#include <sys/types.h>
#include <sys/ddi.h>

clock_t drv_hztousec(clock_t hertz);
```

INTERFACE LEVEL

Architecture independent level 1 (DDI/DKI).

PARAMETERS

hertz The number of clock ticks to convert.

DESCRIPTION

`drv_hztousec()` converts into microseconds the time expressed by *hertz*, which is in system clock ticks.

The kernel variable `lbolt`, whose value should be retrieved by calling `ddi_get_lbolt`(9F), is the length of time the system has been up since boot and is expressed in clock ticks. Drivers often use the value of `lbolt` before and after an I/O request to measure the amount of time it took the device to process the request. `drv_hztousec()` can be used by the driver to convert the reading from clock ticks to a known unit of time.

RETURN VALUES

The number of microseconds equivalent to the *hertz* parameter. No error value is returned. If the microsecond equivalent to *hertz* is too large to be represented as a `clock_t` , then the maximum `clock_t` value will be returned.

CONTEXT

`drv_hztousec()` can be called from user or interrupt context.

SEE ALSO

`ddi_get_lbolt`(9F), `drv_usectohz`(9F), `drv_usecwait`(9F)

Writing Device Drivers

NAME

drv_priv – determine driver privilege

SYNOPSIS

```
#include <sys/types.h>
#include <sys/cred.h>
#include <sys/ddi.h>

int drv_priv(cred_t *cr);
```

INTERFACE LEVEL

Architecture independent level 1 (DDI/DKI).

PARAMETERS

cr Pointer to the user credential structure.

DESCRIPTION

`drv_priv()` provides a general interface to the system privilege policy. It determines whether the credentials supplied by the user credential structure pointed to by *cr* identify a privileged process. This function should only be used when file access modes and special minor device numbers are insufficient to provide protection for the requested driver function. It is intended to replace all calls to `suser()` and any explicit checks for effective `user ID = 0` in driver code.

RETURN VALUES

This routine returns `0` if it succeeds, `EPERM` if it fails.

CONTEXT

`drv_priv()` can be called from user or interrupt context.

SEE ALSO

Writing Device Drivers

NAME

drv_usectohz – convert microseconds to clock ticks

SYNOPSIS

```
#include <sys/types.h>
#include <sys/ddi.h>

clock_t drv_usectohz(clock_t microsecs);
```

INTERFACE LEVEL

Architecture independent level 1 (DDI/DKI).

PARAMETERS

microsecs The number of microseconds to convert.

DESCRIPTION

`drv_usectohz()` converts a length of time expressed in microseconds to a number of system clock ticks. The time arguments to `timeout`(9F) and `delay`(9F) are expressed in clock ticks.

`drv_usectohz()` is a portable interface for drivers to make calls to `timeout`(9F) and `delay`(9F) and remain binary compatible should the driver object file be used on a system with a different clock speed (a different number of ticks in a second).

RETURN VALUES

The value returned is the number of system clock ticks equivalent to the *microsecs* argument. No error value is returned. If the clock tick equivalent to *microsecs* is too large to be represented as a `clock_t`, then the maximum `clock_t` value will be returned.

CONTEXT

`drv_usectohz()` can be called from user or interrupt context.

SEE ALSO

`delay`(9F), `drv_hztousec`(9F), `timeout`(9F)

Writing Device Drivers

NAME

drv_usecwait – busy-wait for specified interval

SYNOPSIS

```
#include <sys/types.h>
#include <sys/ddi.h>

void drv_usecwait(clock_t microsecs);
```

INTERFACE LEVEL

Architecture independent level 1 (DDI/DKI).

PARAMETERS

microsecs The number of microseconds to busy-wait.

DESCRIPTION

`drv_usecwait()` gives drivers a means of busy-waiting for a specified microsecond count. The amount of time spent busy-waiting may be greater than the microsecond count but will minimally be the number of microseconds specified.

`delay`(9F) can be used by a driver to delay for a specified number of system ticks, but it has two limitations. First, the granularity of the wait time is limited to one clock tick, which may be more time than is needed for the delay. Second, `delay`(9F) may only be invoked from user context and hence cannot be used at interrupt time or system initialization.

Often, drivers need to delay for only a few microseconds, waiting for a write to a device register to be picked up by the device. In this case, even in user context, `delay`(9F) produces too long a wait period.

CONTEXT

`drv_usecwait()` can be called from user or interrupt context.

SEE ALSO

`delay`(9F), `timeout`(9F), `untimeout`(9F)

Writing Device Drivers

NOTES

The driver wastes processor time by making this call since `drv_usecwait()` does not block but simply busy-waits. The driver should only make calls to `drv_usecwait()` as needed, and only for as much time as needed. `drv_usecwait()` does not mask out interrupts.

NAME

dupb – duplicate a message block descriptor

SYNOPSIS

```
#include <sys/stream.h>

mblk_t *dupb(mblk_t *bp);
```

INTERFACE LEVEL

Architecture independent level 1 (DDI/DKI).

PARAMETERS

.bp Pointer to the message block to be duplicated. `mblk_t` is an instance of the `msgb`(9S) structure.

DESCRIPTION

`dupb()` creates a new `mblk_t` structure (see `msgb`(9S)) to reference the message block pointed to by *bp*.

Unlike `copyb`(9F), `dupb( )` does not copy the information in the `dblk_t` structure (see `datab`(9S)), but creates a new `mblk_t` structure to point to it. The reference count in the `dblk_t` structure (`db_ref`) is incremented. The new `mblk_t` structure contains the same information as the original. Note that `b_rptr` and `b_wptr` are copied from the *bp*.

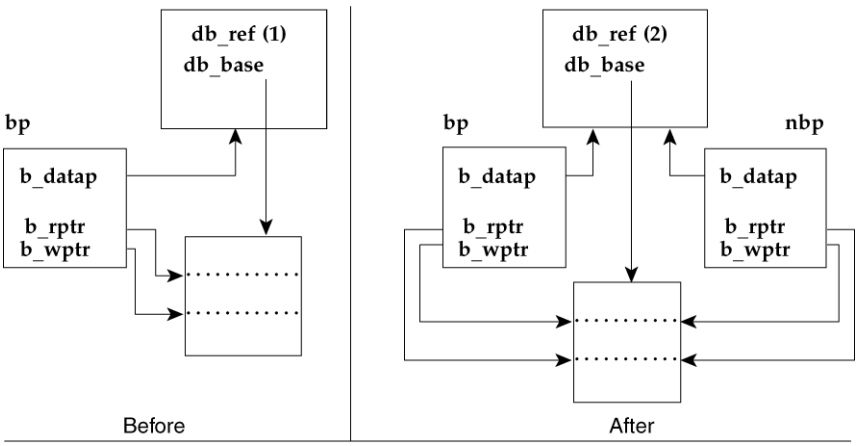

nbp=dupb(bp);

RETURN VALUES

If successful, `dupb()` returns a pointer to the new message block. A `NULL` pointer is returned if `dupb()` cannot allocate a new message block descriptor or if the `db_ref` field of the data block structure (see `datab`(9S)) has reached a maximum value (`255`).

CONTEXT

`dupb()` can be called from user, kernel, or interrupt context.

EXAMPLES

EXAMPLE 1 Using `dupb()`

This `srv`(9E) (service) routine adds a header to all `M_DATA` messages before passing them along. `dupb` is used instead of `copyb`(9F) because the contents of the header block are not changed.

For each message on the queue, if it is a priority message, pass it along immediately (lines 10–11). Otherwise, if it is anything other than an `M_DATA` message (line 12), and if it can be sent along (line 13), then do so (line 14). Otherwise, put the message back on the queue and return (lines 16–17). For all `M_DATA` messages, first check to see if the stream is flow-controlled (line 20). If it is, put the message back on the queue and return (lines 37–38). If it is not, the header block is duplicated (line 21).

`dupb()` can fail either due to lack of resources or because the message block has already been duplicated 255 times. In order to handle the latter case, the example calls `copyb`(9F) (line 22). If `copyb`(9F) fails, it is due to buffer allocation failure. In this case, `qbufcall`(9F) is used to initiate a callback (lines 30-31) if one is not already pending (lines 26-27).

The callback function, `xxxcallback()`, clears the recorded `qbufcall`(9F) callback id and schedules the service procedure (lines 49-50). Note that the close routine, `xxxclose()`, must cancel any outstanding `qbufcall`(9F) callback requests (lines 58-59).

If `dupb()` or `copyb`(9F) succeed, link the `M_DATA` message to the new message block (line 34) and pass it along (line 35).

```
 1  xxxsrv(q)
 2     queue_t *q;
 3  {
 4   struct xx *xx = (struct xx *)q->q_ptr;
 5   mblk_t *mp;
 6   mblk_t *bp;
 7   extern mblk_t *hdr;
 8
 9   while ((mp = getq(q)) != NULL) {
10        if (mp->b_datap->db_type >= QPCTL) {
11             putnext(q, mp);
12        } else if (mp->b_datap->db_type != M_DATA) {
13             if (canputnext(q))
14                  putnext(q, mp);
15             else {
16                  putbq(q, mp);
17                  return;
18             }
19        } else {  /* M_DATA */
20             if (canputnext(q)) {
21                  if ((bp = dupb(hdr)) == NULL)
22                       bp = copyb(hdr);
23                  if (bp == NULL) {
24                       size_t size = msgdsize(mp);
25                       putbq(q, mp);
26                       if (xx->xx_qbufcall_id) {
```

EXAMPLE 1 Using dupb() *(Continued)*

```
                                /* qbufcall pending */
                                return;
                            }
                            xx->xx_qbufcall_id = qbufcall(q, size,
                                BPRI_MED, xxxcallback, (intptr_t)q);
                            return;
                        }
                        linkb(bp, mp);
                        putnext(q, bp);
                    } else {
                        putbq(q, mp);
                        return;
                    }
                }
            }
        }
        void
        xxxcallback(q)
            queue_t *q;
        {
            struct xx *xx = (struct xx *)q->q_ptr;

            xx->xx_qbufcall_id = 0;
            qenable(q);
        }

        xxxclose(q, cflag, crp)
            queue_t *q;
            int  cflag;
            cred_t *crp;
        {
            struct xx *xx = (struct xx *)q->q_ptr;
            ...
            if (xx->xx_qbufcall_id)
                qunbufcall(q, xx->xx_qbufcall_id);
            ...
        }
```

SEE ALSO srv(9E), copyb(9F), qbufcall(9F), datab(9S), msgb(9S)

Writing Device Drivers STREAMS Programming Guide

NAME

dupmsg – duplicate a message

SYNOPSIS

```
#include <sys/stream.h>

mblk_t *dupmsg(mblk_t *mp);
```

INTERFACE LEVEL

Architecture independent level 1 (DDI/DKI).

PARAMETERS

mp Pointer to the message.

DESCRIPTION

`dupmsg()` forms a new message by copying the message block descriptors pointed to by *mp* and linking them. `dupb`(9F) is called for each message block. The data blocks themselves are not duplicated.

RETURN VALUES

If successful, `dupmsg()` returns a pointer to the new message block. Otherwise, it returns a `NULL` pointer. A return value of `NULL` indicates either memory depletion or the data block reference count, `db_ref` (see `datab`(9S)), has reached a limit (`255`). See `dupb`(9F).

CONTEXT

`dupmsg()` can be called from user, kernel, or interrupt context.

EXAMPLES

EXAMPLE 1 Using `dupmsg()`

See `copyb`(9F) for an example using `dupmsg()`.

SEE ALSO

`copyb`(9F), `copymsg`(9F), `dupb`(9F), `datab`(9S)

Writing Device Drivers

STREAMS Programming Guide

NAME

enableok – reschedule a queue for service

SYNOPSIS

```
#include <sys/stream.h>
#include <sys/ddi.h>

void enableok(queue_t *q);
```

INTERFACE LEVEL

Architecture independent level 1 (DDI/DKI).

PARAMETERS

q A pointer to the queue to be rescheduled.

DESCRIPTION

`enableok()` enables queue *q* to be rescheduled for service. It reverses the effect of a previous call to `noenable`(9F) on *q* by turning off the `QNOENB` flag in the queue.

CONTEXT

`enableok()` can be called from user or interrupt context.

EXAMPLES

EXAMPLE 1 Using `emableok()`

The `qrestart()` routine uses two STREAMS functions to restart a queue that has been disabled. The `enableok()` function turns off the `QNOENB` flag, allowing the `qenable`(9F) to schedule the queue for immediate processing.

```
void
qrestart(rdwr_q)
        register queue_t *rdwr_q;
{
   enableok(rdwr_q);
   /* re-enable a queue that has been disabled */
   (void) qenable(rdwr_q);
}
```

SEE ALSO

`noenable`(9F), `qenable`(9F)

Writing Device Drivers STREAMS Programming Guide

NAME

esballoc – allocate a message block using a caller-supplied buffer

SYNOPSIS

```
#include <sys/stream.h>

mblk_t *esballoc(uchar *base, size_t size, uint_t pri, frtn_t
     *fr_rtnp);
```

INTERFACE LEVEL

Architecture independent level 1 (DDI/DKI).

PARAMETERS

base	Address of user supplied data buffer.
size	Number of bytes in data buffer.
pri	Priority of allocation request (to be used by `allocb`(9F) function, called by `esballoc( )`).
fr_rtnp	Free routine data structure.

DESCRIPTION

`esballoc()` creates a STREAMS message and attaches a user-supplied data buffer in place of a STREAMS data buffer. It calls `allocb`(9F) to get a message and data block header only. The newly allocated message will have both the `b_wptr` and `b_rptr` set to the base of the buffer. As when using `allocb`(9F), the newly allocated message will have both `b_wptr` and `b_rptr` set to the base of the data buffer. The user-supplied data buffer, pointed to by *base*, is used as the data buffer for the message.

When `freeb`(9F) is called to free the message, the driver's message freeing routine (referenced through the `free_rtn` structure) is called, with appropriate arguments, to free the data buffer.

The `free_rtn` structure includes the following members:

```
void (*free_func)();     /* user's freeing routine */
char *free_arg;          /* arguments to free_func() */
```

Instead of requiring a specific number of arguments, the `free_arg` field is defined of type `char *`. This way, the driver can pass a pointer to a structure if more than one argument is needed.

The method by which `free_func` is called is implementation-specific. The module writer must not assume that free_func will or will not be called directly from STREAMS utility routines like `freeb`(9F) which free a message block.

`free_func` must not call another modules put procedure nor attempt to acquire a private module lock which may be held by another thread across a call to a STREAMS utility routine which could free a message block. Otherwise, the possibility for lock recursion and/or deadlock exists.

`free_func` must not access any dynamically allocated data structure that might no longer exist when it runs.

RETURN VALUES

On success, a pointer to the newly allocated message block is returned. On failure, `NULL` is returned.

CONTEXT

`esballoc()` can be called from user or interrupt context.

SEE ALSO

`allocb`(9F), `freeb`(9F), `datab`(9S), `free_rtn`(9S)

Writing Device Drivers STREAMS Programming Guide

WARNINGS

The `free_func` must be defined in kernel space, should be declared `void` and accept one argument. It has no user context and must not sleep.

NAME

esbbcall – call function when buffer is available

SYNOPSIS

```
#include <sys/stream.h>

bufcall_id_t esbbcall(uint_t pri, void *funcvoid *arg, void arg);
```

INTERFACE LEVEL

Architecture independent level 1 (DDI/DKI).

PARAMETERS

pri Priority of allocation request (to be used by `allocb`(9F) function, called by `esbbcall()`)

func Function to be called when buffer becomes available.

arg Argument to *func*.

DESCRIPTION

`esbbcall()`, like `bufcall`(9F), serves as a `timeout`(9F) call of indeterminate length. If `esballoc`(9F) is unable to allocate a message and data block header to go with its externally supplied data buffer, `esbbcall()` can be used to schedule the routine *func*, to be called with the argument *arg* when a buffer becomes available. *func* may be a routine that calls `esballoc`(9F) or it may be another kernel function.

RETURN VALUES

On success, a `bufcall` IDis returned. On failure, `0` is returned. The value returned from a successful call should be saved for possible future use with `unbufcall()` should it become necessary to cancel the `esbbcall()` request (as at driver close time).

CONTEXT

`esbbcall()` can be called from user or interrupt context.

SEE ALSO

`allocb`(9F), `bufcall`(9F), `esballoc`(9F), `timeout`(9F), `datab`(9S), `unbufcall`(9F)

Writing Device Drivers STREAMS Programming Guide

NAME

flushband – flush messages for a specified priority band

SYNOPSIS

```
#include <sys/stream.h>

void flushband(queue_t *q, unsigned char pri, int flag);
```

INTERFACE LEVEL

Architecture independent level 1 (DDI/DKI).

PARAMETERS

q Pointer to the queue.

pri Priority of messages to be flushed.

flag Valid *flag* values are:

`FLUSHDATA` Flush only data messages (types `M_DATA`, `M_DELAY`, `M_PROTO`, and `M_PCPROTO`).

`FLUSHALL` Flush all messages.

DESCRIPTION

`flushband()` flushes messages associated with the priority band specified by *pri*. If *pri* is `0`, only normal and high priority messages are flushed. Otherwise, messages are flushed from the band *pri* according to the value of *flag*.

CONTEXT

`flushband()` can be called from user or interrupt context.

SEE ALSO

`flushq`(9F)

Writing Device Drivers STREAMS Programming Guide

NAME

flushq – remove messages from a queue

SYNOPSIS

```
#include <sys/stream.h>

void flushq(queue_t *q, int flag);
```

INTERFACE LEVEL

Architecture independent level 1 (DDI/DKI).

PARAMETERS

q Pointer to the queue to be flushed.

flag Valid *flag* values are:

`FLUSHDATA` Flush only data messages (types `M_DATA` `M_DELAY` `M_PROTO` and `M_PCPROTO`).

`FLUSHALL` Flush all messages.

DESCRIPTION

`flushq()` frees messages and their associated data structures by calling `freemsg`(9F). If the queue's count falls below the low water mark and the queue was blocking an upstream service procedure, the nearest upstream service procedure is enabled.

CONTEXT

`flushq()` can be called from user or interrupt context.

EXAMPLES

EXAMPLE 1 Using `flushq()`

This example depicts the canonical flushing code for STREAMS modules. The module has a write service procedure and potentially has messages on the queue. If it receives an `M_FLUSH` message, and if the `FLUSHR` bit is on in the first byte of the message (line 10), then the read queue is flushed (line 11). If the `FLUSHW` bit is on (line 12), then the write queue is flushed (line 13). Then the message is passed along to the next entity in the stream (line 14). See the example for `qreply`(9F) for the canonical flushing code for drivers.

```
 1  /*
 2   * Module write-side put procedure.
 3   */
 4  xxxwput(q, mp)
 5      queue_t *q;
 6      mblk_t *mp;
 7  {
 8   switch(mp->b_datap->db_type) {
 9      case M_FLUSH:
10        if (*mp->b_rptr & FLUSHR)
11             flushq(RD(q), FLUSHALL);
12        if (*mp->b_rptr & FLUSHW)
13             flushq(q, FLUSHALL);
14        putnext(q, mp);
15        break;
          . . .
16   }
17  }
```

SEE ALSO

`flushband`(9F), `freemsg`(9F), `putq`(9F), `qreply`(9F)

Writing Device Drivers STREAMS Programming Guide

NAME

freeb – free a message block

SYNOPSIS

```
#include <sys/stream.h>

void freeb(mblk_t *bp);
```

PARAMETERS

bp Pointer to the message block to be deallocated. `mblk_t` is an instance of the `msgb`(9S) structure.

INTERFACE LEVEL

Architecture independent level 1 (DDI/DKI).

DESCRIPTION

`freeb()()` deallocates a message block. If the reference count of the `db_ref` member of the `datab`(9S) structure is greater than `1`, `freeb()()` decrements the count. If `db_ref` equals `1`, it deallocates the message block and the corresponding data block and buffer.

If the data buffer to be freed was allocated with the `esballoc`(9F), the buffer may be a non-STREAMS resource. In that case, the driver must be notified that the attached data buffer needs to be freed, and run its own freeing routine. To make this process independent of the driver used in the stream, `freeb()()` finds the `free_rtn`(9S) structure associated with the buffer. The `free_rtn` structure contains a pointer to the driver-dependent routine, which releases the buffer. Once this is accomplished, `freeb()()` releases the STREAMS resources associated with the buffer.

CONTEXT

`freeb()()` can be called from user or interrupt context.

EXAMPLES

EXAMPLE 1 Using `freeb()`

See `copyb`(9F) for an example of using `freeb()()`.

SEE ALSO

`allocb`(9F), `copyb`(9F), `dupb`(9F), `esballoc`(9F), `free_rtn`(9S)

Writing Device Drivers

STREAMS Programming Guide

NAME

freemsg – free all message blocks in a message

SYNOPSIS

```
#include <sys/stream.h>

void freemsg(mblk_t *mp);
```

INTERFACE LEVEL

Architecture independent level 1 (DDI/DKI).

PARAMETERS

mp Pointer to the message blocks to be deallocated. `mblk_t` is an instance of the `msgb`(9S) structure. If *mp* is NULL, `freemsg()` immediately returns.

DESCRIPTION

`freemsg()` calls `freeb`(9F) to free all message and data blocks associated with the message pointed to by *mp*.

CONTEXT

`freemsg()` can be called from user or interrupt context.

EXAMPLES

EXAMPLE 1 Using `freemsg()`

See `copymsg`(9F).

SEE ALSO

`copymsg`(9F), `freeb`(9F), `msgb`(9S)

Writing Device Drivers

STREAMS Programming Guide

NOTES

The behavior of `freemsg()` when passed a NULL pointer is Solaris-specific.

NAME

freerbuf – free a raw buffer header

SYNOPSIS

```
#include <sys/buf.h>
#include <sys/ddi.h>

void freerbuf(struct buf *bp);
```

INTERFACE LEVEL

Architecture independent level 1 (DDI/DKI).

PARAMETERS

bp Pointer to a previously allocated buffer header structure.

DESCRIPTION

`freerbuf()` frees a raw buffer header previously allocated by `getrbuf`(9F). This function does not sleep and so may be called from an interrupt routine.

CONTEXT

`freerbuf()` can be called from user or interrupt context.

SEE ALSO

`getrbuf`(9F), `kmem_alloc`(9F), `kmem_free`(9F), `kmem_zalloc`(9F)

NAME

freezestr, unfreezestr – freeze, thaw the state of a stream

SYNOPSIS

```
#include <sys/stream.h>
#include <sys/ddi.h>

void freezestr(queue_t *q);

void unfreezestr(queue_t *q);
```

INTERFACE LEVEL

Architecture independent level 1 (DDI/DKI).

PARAMETERS

q Pointer to the message queue to freeze/unfreeze.

DESCRIPTION

`freezestr()` freezes the state of the entire stream containing the queue pair *q*. A frozen stream blocks any thread attempting to enter any open, close, put or service routine belonging to any queue instance in the stream, and blocks any thread currently within the stream if it attempts to put messages onto or take messages off of any queue within the stream (with the sole exception of the caller). Threads blocked by this mechanism remain so until the stream is thawed by a call to `unfreezestr()`.

Drivers and modules must freeze the stream before manipulating the queues directly (as opposed to manipulating them through programmatic interfaces such as `getq`(9F), `putq`(9F), `putbq`(9F), etc.)

CONTEXT

These routines may be called from any stream open, close, put or service routine as well as interrupt handlers, callouts and call-backs.

SEE ALSO

`getq`(9F), `insq`(9F), `putbq`(9F), `putq`(9F), `rmvq`(9F), `strqget`(9F), `strqset`(9F)

Writing Device Drivers

STREAMS Programming Guide

NOTES

Calling `freezestr()` to freeze a stream that is already frozen by the caller will result in a single-party deadlock.

The caller of `unfreezestr()` must be the thread who called `freezestr()`.

There are usually better ways to accomplish things than by freezing the stream.

STREAMS utility functions such as `getq`(9F), `putq`(9F), `putbq`(9F), etc. may not be called by the caller of `freezestr()` while the stream is still frozen, as they indirectly freeze the stream to ensure atomicity of queue manipulation.

NAME

geterror – return I/O error

SYNOPSIS

```
#include <sys/types.h>
#include <sys/buf.h>
#include <sys/ddi.h>

int geterror(struct buf *bp);
```

INTERFACE LEVEL

Architecture independent level 1 (DDI/DKI).

PARAMETERS

bp Pointer to a `buf`(9S) structure.

DESCRIPTION

`geterror()` returns the error number from the error field of the buffer header structure.

RETURN VALUES

An error number indicating the error condition of the I/O request is returned. If the I/O request completes successfully, `0` is returned.

CONTEXT

`geterror()` can be called from user or interrupt context.

SEE ALSO

`buf`(9S)

Writing Device Drivers

NAME

getmajor – get major device number

SYNOPSIS

```
#include <sys/types.h>
#include <sys/mkdev.h>
#include <sys/ddi.h>

major_t getmajor(dev_t dev);
```

INTERFACE LEVEL

Architecture independent level 1 (DDI/DKI).

PARAMETERS

dev Device number.

DESCRIPTION

`getmajor()` extracts the major number from a device number.

RETURN VALUES

The major number.

CONTEXT

`getmajor()` can be called from user or interrupt context.

EXAMPLES

EXAMPLE 1 Using `getmajor()`

The following example shows both the `getmajor()` and `getminor`(9F) functions used in a debug `cmn_err`(9F) statement to return the major and minor numbers for the device supported by the driver.

```
dev_t dev;

#ifdef DEBUG
cmn_err(CE_NOTE,"Driver Started.  Major# = %d,
     Minor# = %d", getmajor(dev), getminor(dev));
#endif
```

SEE ALSO

`cmn_err`(9F), `getminor`(9F), `makedevice`(9F)

Writing Device Drivers

WARNINGS

No validity checking is performed. If *dev* is invalid, an invalid number is returned.

NAME

getminor – get minor device number

SYNOPSIS

```
#include <sys/types.h>
#include <sys/mkdev.h>
#include <sys/ddi.h>

minor_t getminor(dev_t dev);
```

INTERFACE LEVEL

Architecture independent level 1 (DDI/DKI).

PARAMETERS

dev Device number.

DESCRIPTION

`getminor()` extracts the minor number from a device number.

RETURN VALUES

The minor number.

CONTEXT

`getminor()` can be called from user or interrupt context.

EXAMPLES

See the `getmajor`(9F) manual page for an example of how to use `getminor()`.

SEE ALSO

`getmajor`(9F), `makedevice`(9F)

Writing Device Drivers

WARNINGS

No validity checking is performed. If *dev* is invalid, an invalid number is returned.

NAME

get_pktiopb, free_pktiopb – allocate/free a SCSI packet in the iopb map

SYNOPSIS

```
#include <sys/scsi/scsi.h>

struct scsi_pkt *get_pktiopb(struct scsi_address *ap, caddr_t
     *datap, int cdblen, int statuslen, int datalen, int readflag, int
     (*callback);

void free_pktiopb(struct scsi_pkt *pkt, caddr_t datap, int datalen);
```

INTERFACE LEVEL

Solaris DDI specific (Solaris DDI).

PARAMETERS

ap	Pointer to the target's `scsi_address` structure.
datap	Pointer to the address of the packet, set by this function.
cdblen	Number of bytes required for the SCSI command descriptor block (CDB).
statuslen	Number of bytes required for the SCSI status area.
datalen	Number of bytes required for the data area of the SCSI command.
readflag	If non-zero, data will be transferred from the SCSI target.
callback	Pointer to a callback function, or `NULL_FUNC` or `SLEEP_FUNC`
pkt	Pointer to a `scsi_pkt`(9S) structure.

DESCRIPTION

`get_pktiopb()` allocates a `scsi_pkt` structure that has a small data area allocated. It is used by some SCSI commands such as `REQUEST_SENSE`, which involve a small amount of data and require cache-consistent memory for proper operation. It uses `ddi_iopb_alloc`(9F) for allocating the data area and `scsi_resalloc`(9F) to allocate the packet and DMA resources.

callback indicates what `get_pktiopb()` should do when resources are not available:

`NULL_FUNC`	Do not wait for resources. Return a `NULL` pointer.
`SLEEP_FUNC`	Wait indefinitely for resources.
Other Values	*callback* points to a function which is called when resources may have become available. *callback* `must` return either `0` (indicating that it attempted to allocate resources but failed to do so again), in which case it is put back on a list to be called again later, or `1` indicating either success in allocating resources or indicating that it no longer cares for a retry.

`free_pktiopb()` is used for freeing the packet and its associated resources.

RETURN VALUES

`get_pktiopb()` returns a pointer to the newly allocated `scsi_pkt` or a `NULL` pointer.

CONTEXT

If *callback* is `SLEEP_FUNC`, then this routine may only be called from user-level code. Otherwise, it may be called from either user or interrupt level. The *callback* function may not block or call routines that block.

`free_pktiopb()` can be called from user or interrupt context.

SEE ALSO

`ddi_iopb_alloc`(9F), `scsi_alloc_consistent_buf`(9F), `scsi_free_consistent_buf`(9F), `scsi_pktalloc`(9F), `scsi_resalloc`(9F), `scsi_pkt`(9S)

Writing Device Drivers

NOTES

`get_pktiopb()` and `free_pktiopb()` are old functions and should be replaced with `scsi_alloc_consistent_buf`(9F) and `scsi_free_consistent_buf`(9F). `get_pktiopb()` uses scarce resources. Use it selectively.

NAME

getq – get the next message from a queue

SYNOPSIS

```
#include <sys/stream.h>

mblk_t *getq(queue_t *q);
```

INTERFACE LEVEL

Architecture independent level 1 (DDI/DKI).

PARAMETERS

q Pointer to the queue from which the message is to be retrieved.

DESCRIPTION

`getq()` is used by a service (`srv`(9E)) routine to retrieve its enqueued messages.

A module or driver may include a service routine to process enqueued messages. Once the STREAMS scheduler calls `srv()` it must process all enqueued messages, unless prevented by flow control. `getq()` obtains the next available message from the top of the queue pointed to by *q*. It should be called in a `while` loop that is exited only when there are no more messages or flow control prevents further processing.

If an attempt was made to write to the queue while it was blocked by flow control, `getq()` back-enables (restarts) the service routine once it falls below the low water mark.

RETURN VALUES

If there is a message to retrieve, `getq()` returns a pointer to it. If no message is queued, `getq()` returns a `NULL` pointer.

CONTEXT

`getq()` can be called from user or interrupt context.

EXAMPLES

See `dupb`(9F).

SEE ALSO

`srv`(9E), `bcanput`(9F), `canput`(9F), `dupb`(9F), `putbq`(9F), `putq`(9F), `qenable`(9F)

Writing Device Drivers

STREAMS Programming Guide

NAME

getrbuf – get a raw buffer header

SYNOPSIS

```
#include <sys/buf.h>
#include <sys/kmem.h>
#include <sys/ddi.h>

struct buf *getrbuf(int sleepflag);
```

INTERFACE LEVEL

Architecture independent level 1 (DDI/DKI).

PARAMETERS

sleepflag Indicates whether driver should sleep for free space.

DESCRIPTION

`getrbuf()` allocates the space for a buffer header to the caller. It is used in cases where a block driver is performing raw (character interface) I/O and needs to set up a buffer header that is not associated with the buffer cache.

`getrbuf()` calls `kmem_alloc`(9F) to perform the memory allocation. `kmem_alloc()` requires the information included in the *sleepflag* argument. If *sleepflag* is set to `KM_SLEEP`, the driver may sleep until the space is freed up. If *sleepflag* is set to `KM_NOSLEEP`, the driver will not sleep. In either case, a pointer to the allocated space is returned or `NULL` to indicate that no space was available.

RETURN VALUES

`getrbuf()` returns a pointer to the allocated buffer header, or `NULL` if no space is available.

CONTEXT

`getrbuf()` can be called from user or interrupt context. (Drivers must not allow `getrbuf()` to sleep if called from an interrupt routine.)

SEE ALSO

`bioinit`(9F), `freerbuf`(9F), `kmem_alloc`(9F), `kmem_free`(9F)

Writing Device Drivers

NAME

hat_getkpfnum – get page frame number for kernel address

SYNOPSIS

```
#include <sys/types.h>
 #include <sys/ddi.h>
 #include <sys/sunddi.h>


uint_t hat_getkpfnum(caddr_t addr);
```

INTERFACE LEVEL

Architecture independent level 2 (DKI only).

PARAMETERS

addr The kernel virtual address for which the page frame number is to be returned.

DESCRIPTION

`hat_getkpfnum()` returns the page frame number corresponding to the kernel virtual address, *addr*.

addr must be a kernel virtual address which maps to device memory. `ddi_map_regs`(9F) can be used to obtain this address. For example, `ddi_map_regs`(9F) can be called in the driver's `attach`(9E) routine. The resulting kernel virtual address can be saved by the driver (see `ddi_soft_state`(9F)) and used in `mmap`(9E). The corresponding `ddi_unmap_regs`(9F) call can be made in the driver's `detach`(9E) routine. Refer to `mmap`(9E) for more information.

RETURN VALUES

The page frame number corresponding to the valid virtual address *addr*. Otherwise the return value is undefined.

CONTEXT

`hat_getkpfnum()` can be called only from user or kernel context.

SEE ALSO

`attach`(9E), `detach`(9E), `mmap`(9E), `ddi_map_regs`(9F), `ddi_soft_state`(9F), `ddi_unmap_regs`(9F)

Writing Device Drivers

NOTES

For some devices, mapping device memory in the driver's `attach`(9E) routine and unmapping device memory in the driver's `detach`(9E) routine is a sizeable drain on system resources. This is especially true for devices with a large amount of physical address space. Refer to `mmap`(9E) for alternative methods.

NAME

inb, inw, inl, repinsb, repinsw, repinsd – read from an I/O port

SYNOPSIS

```
#include <sys/ddi.h>
 #include <sys/sunddi.h>

unsigned char inb(int port);

unsigned short inw(int port);

unsigned long inl(int port);

void repinsb(int port, unsigned char* addr, int count);

void repinsw(int port, unsigned short* addr, int count);

void repinsd(int port, unsigned long* addr, int count);
```

INTERFACE LEVEL

Solaris IA DDI specific (Solaris IA DDI).

PARAMETERS

port A valid I/O port address.

addr The address of a buffer where the values will be stored.

count The number of values to be read from the I/O port.

DESCRIPTION

These routines read data of various sizes from the I/O port with the address specified by *port*.

The `inb()`, `inw()`, and `inl()` functions read 8 bits, 16 bits, and 32 bits of data respectively, returning the resulting values.

The `repinsb()`, `repinsw()`, and `repinsd()` functions read multiple 8-bit, 16-bit, and 32-bit values, respectively. *count* specifies the number of values to be read. A a pointer to a buffer will receive the input data; the buffer must be long enough to hold count values of the requested size.

RETURN VALUES

`inb()`, `inw()`, and `inl()` return the value that was read from the I/O port.

CONTEXT

These functions may be called from user or interrupt context.

ATTRIBUTES

See `attributes`(5) for descriptions of the following attributes:

ATTRIBUTE TYPE	ATTRIBUTE VALUE
Architecture	IA

SEE ALSO

`eisa`(4), `isa`(4), `attributes`(5), `outb`(9F)

Writing Device Drivers

NAME

insq – insert a message into a queue

SYNOPSIS

```
#include <sys/stream.h>

int insq(queue_t *q, mblk_t *emp, mblk_t *nmp);
```

INTERFACE LEVEL

Architecture independent level 1 (DDI/DKI).

PARAMETERS

q Pointer to the queue containing message *emp*.

emp Enqueued message before which the new message is to be inserted. `mblk_t` is an instance of the `msgb`(9S) structure.

nmp Message to be inserted.

DESCRIPTION

`insq()` inserts a message into a queue. The message to be inserted, *nmp*, is placed in *q* immediately before the message *emp*. If *emp* is `NULL`, the new message is placed at the end of the queue. The queue class of the new message is ignored. All flow control parameters are updated. The service procedure is enabled unless `QNOENB` is set.

RETURN VALUES

`insq()` returns `1` on success, and `0` on failure.

CONTEXT

`insq()` can be called from user or interrupt context.

EXAMPLES

This routine illustrates the steps a transport provider may take to place expedited data ahead of normal data on a queue (assume all `M_DATA` messages are converted into `M_PROTO` `T_DATA_REQ` messages). Normal `T_DATA_REQ` messages are just placed on the end of the queue (line 16). However, expedited `T_EXDATA_REQ` messages are inserted before any normal messages already on the queue (line 25). If there are no normal messages on the queue, `bp` will be `NULL` and we fall out of the `for` loop (line 21). `insq` acts like `putq`(9F) in this case.

```
 1  #include
 2  #include
 3
 4  static int
 5  xxxwput(queue_t *q, mblk_t *mp)
 6  {
 7   union T_primitives *tp;
 8   mblk_t *bp;
 9   union T_primitives *ntp;
10
11   switch (mp->b_datap->db_type) {
12   case M_PROTO:
13        tp = (union T_primitives *)mp->b_rptr;
14        switch (tp->type) {
15        case T_DATA_REQ:
16                putq(q, mp);
17                break;
18
19        case T_EXDATA_REQ:
20                freezestr(q);
21                for (bp = q->q_first; bp; bp = bp->b_next) {
22                   if (bp->b_datap->db_type == M_PROTO) {
23                     ntp = (union T_primitives *)bp->b_rptr;
```

```
                    if (ntp->type != T_EXDATA_REQ)
                        break;
                }
            }
            (void)insq(q, bp, mp);
            unfreezestr(q);
            break;
        . . .
            }
    }
}
```

SEE ALSO

`freezestr`(9F), `putq`(9F), `rmvq`(9F), `unfreezestr`(9F), `msgb`(9S)

Writing Device Drivers

STREAMS Programming Guide

WARNINGS

If *emp* is non-NULL, it must point to a message on *q* or a system panic could result.

NOTES

The stream must be frozen using `freezestr`(9F) before calling `insq()`.

NAME

IOC_CONVERT_FROM – determine if there is a need to translate M_IOCTL contents.

SYNOPSIS

```
#include <sys/stream.h>

uint_t IOC_CONVERT_FROM(struct iocblk *iocp);
```

INTERFACE LEVEL

Solaris DDI Specific (Solaris DDI)

PARAMETERS

iocp A pointer to the `M_IOCTL` control structure.

DESCRIPTION

The `IOC_CONVERT_FROM` macro is used to see if the contents of the current `M_IOCTL` message had its origin in a different C Language Type Model.

RETURN VALUES

`IOC_CONVERT_FROM()` returns the following values:

`IOC_ILP32` This is an LP64 kernel and the `M_IOCTL` originated in an ILP32 user process.

`IOC_NONE` The `M_IOCTL` message uses the same C Language Type Model as this calling module or driver.

CONTEXT

`IOC_CONVERT_FROM()` can be called from user or interrupt context.

SEE ALSO

`ddi_model_convert_from`(9F)

Writing Device Drivers

STREAMS Programming Guide

NAME

kmem_alloc, kmem_zalloc, kmem_free – allocate kernel memory

SYNOPSIS

```
#include <sys/types.h>
#include <sys/kmem.h>

void *kmem_alloc(size_t size, int flag);

void *kmem_zalloc(size_t size, int flag);

void kmem_free(void*buf, size_t size);
```

INTERFACE LEVEL

Architecture independent level 1 (DDI/DKI).

PARAMETERS

size Number of bytes to allocate.

flag Determines whether caller can sleep for memory. Possible flags are `KM_SLEEP` to allow sleeping until memory is available, or `KM_NOSLEEP` to return `NULL` immediately if memory is not available.

buf Pointer to allocated memory.

DESCRIPTION

`kmem_alloc()` allocates *size* bytes of kernel memory and returns a pointer to the allocated memory. The allocated memory is at least double-word aligned, so it can hold any C data structure. No greater alignment can be assumed. *flag* determines whether the caller can sleep for memory. `KM_SLEEP` allocations may sleep but are guaranteed to succeed. `KM_NOSLEEP` allocations are guaranteed not to sleep but may fail (return `NULL`) if no memory is currently available. The initial contents of memory allocated using `kmem_alloc()` are random garbage.

`kmem_zalloc()` is like `kmem_alloc()` but returns zero-filled memory.

`kmem_free()` frees previously allocated kernel memory. The buffer address and size must exactly match the original allocation. Memory cannot be returned piecemeal.

RETURN VALUES

If successful, `kmem_alloc()` and `kmem_zalloc()` return a pointer to the allocated memory. If `KM_NOSLEEP` is set and memory cannot be allocated without sleeping, `kmem_alloc()` and `kmem_zalloc()` return `NULL`.

CONTEXT

`kmem_alloc()` and `kmem_zalloc()` can be called from interrupt context only if the `KM_NOSLEEP` flag is set. They can be called from user context with any valid *flag*. `kmem_free()` can be called from user or interrupt context.

SEE ALSO

`copyout`(9F), `freerbuf`(9F), `getrbuf`(9F)

Writing Device Drivers

WARNINGS

Memory allocated using `kmem_alloc()` is not paged. Available memory is therefore limited by the total physical memory on the system. It is also limited by the available kernel virtual address space, which is often the more restrictive constraint on large-memory configurations.

Excessive use of kernel memory is likely to affect overall system performance. Overcommitment of kernel memory will cause the system to hang or panic.

Misuse of the kernel memory allocator, such as writing past the end of a buffer, using a buffer after freeing it, freeing a buffer twice, or freeing a null or invalid pointer, will corrupt the kernel heap and may cause the system to corrupt data or panic.

The initial contents of memory allocated using `kmem_alloc()` are random garbage. This random garbage may include secure kernel data. Therefore, uninitialized kernel memory should be handled carefully. For example, never `copyout`(9F) a potentially uninitialized buffer.

NOTES

`kmem_alloc(0,` *flag*`)` always returns `NULL`. `kmem_free(NULL, 0)` is legal.

NAME

kstat_create – create and initialize a new kstat

SYNOPSIS

```
#include <sys/types.h>
#include <sys/kstat.h>

kstat_t *kstat_create(char *module, int instance, char *name, char
     *class, uchar_t type, ulong_t ndata, uchar_t ks_flag);
```

INTERFACE LEVEL

Solaris DDI specific (Solaris DDI)

PARAMETERS

module The name of the provider's module (such as "sd", "esp", ...). The "core" kernel uses the name "unix".

instance The provider's instance number, as from `ddi_get_instance`(9F). Modules which do not have a meaningful instance number should use `0`.

name A pointer to a string that uniquely identifies this structure. Only `KSTAT_STRLEN – 1` characters are significant.

class The general class that this kstat belongs to. The following classes are currently in use: `disk`, `tape`, `net`, `controller`, `vm`, `kvm`, `hat`, `streams`, `kstat`, and `misc`.

type The type of `kstat` to allocate. Valid types are:

`KSTAT_TYPE_NAMED`
Allows more than one data record per `kstat`.

`KSTAT_TYPE_INTR`
Interrupt; only one data record per `kstat`.

`KSTAT_TYPE_IO`
I/O; only one data record per `kstat`

ndata The number of type-specific data records to allocate.

flag A bit-field of various flags for this `kstat`. *flag* is some combination of:

`KSTAT_FLAG_VIRTUAL`
Tells `kstat_create()` not to allocate memory for the `kstat` data section; instead, the driver will set the `ks_data` field to point to the data it wishes to export. This provides a convenient way to export existing data structures.

`KSTAT_FLAG_WRITABLE`
Makes the `kstat` data section writable by root.

`KSTAT_FLAG_PERSISTENT`
Indicates that this `kstat` is to be persistent over time. For persistent `kstats`, `kstat_delete`(9F) simply marks the `kstat` as dormant; a subsequent `kstat_create()` reactivates the kstat. This feature is provided so that statistics are not lost across driver close/open (such as raw disk I/O on a disk with

no mounted partitions.) Note: Persistent kstats cannot be virtual, since ks_data points to garbage as soon as the driver goes away.

DESCRIPTION

kstat_create() is used in conjunction with kstat_install(9F) to allocate and initialize a kstat(9S) structure. The method is generally as follows:

kstat_create() allocates and performs necessary system initialization of a kstat(9S) structure. kstat_create() allocates memory for the entire kstat (header plus data), initializes all header fields, initializes the data section to all zeroes, assigns a unique kstat ID (KID), and puts the kstat onto the system's kstat chain. The returned kstat is marked invalid because the provider (caller) has not yet had a chance to initialize the data section.

After a successful call to kstat_create() the driver must perform any necessary initialization of the data section (such as setting the name fields in a kstat of type KSTAT_TYPE_NAMED). Virtual kstats must have the ks_data field set at this time. The provider may also set the ks_update, ks_private, and ks_lock fields if necessary.

Once the kstat is completely initialized, kstat_install(9F) is used to make the kstat accessible to the outside world.

RETURN VALUES

If successful, kstat_create() returns a pointer to the allocated kstat. NULL is returned upon failure.

CONTEXT

kstat_create() can be called from user or kernel context.

EXAMPLES

EXAMPLE 1 Allocating and Initializing a kstat Structure

```
pkstat_t    *ksp;
    ksp = kstat_create(module, instance, name, class, type, ndata, flags);
    if (ksp) {
       /* ... provider initialization, if necessary */
       kstat_install(ksp);
    }
```

SEE ALSO

kstat(3KSTAT), ddi_get_instance(9F), kstat_delete(9F), kstat_install(9F), kstat_named_init(9F), kstat(9S), kstat_named(9S)

Writing Device Drivers

NAME

kstat_delete – remove a kstat from the system

SYNOPSIS

```
#include <sys/types.h>
#include <sys/kstat.h>

void kstat_delete(kstat_t *ksp);
```

INTERFACE LEVEL

Solaris DDI specific (Solaris DDI)

PARAMETERS

ksp Pointer to a currently installed `kstat`(9S) structure.

DESCRIPTION

`kstat_delete()` removes *ksp* from the `kstat` chain and frees all associated system resources.

RETURN VALUES

None.

CONTEXT

`kstat_delete()` can be called from any context.

SEE ALSO

`kstat_create`(9F), `kstat_install`(9F), `kstat_named_init`(9F), `kstat`(9S)

Writing Device Drivers

NOTES

When calling `kstat_delete()`, the driver must not be holding that `kstat`'s `ks_lock`. Otherwise, it may deadlock with a `kstat` reader.

NAME

kstat_install – add a fully initialized kstat to the system

SYNOPSIS

```
#include <sys/types.h>
#include <sys/kstat.h>
```

```
void kstat_install(kstat_t *ksp);
```

INTERFACE LEVEL

Solaris DDI specific (Solaris DDI)

PARAMETERS

ksp Pointer to a fully initialized `kstat`(9S) structure.

DESCRIPTION

`kstat_install()` is used in conjunction with `kstat_create`(9F) to allocate and initialize a `kstat`(9S) structure.

After a successful call to `kstat_create()` the driver must perform any necessary initialization of the data section (such as setting the name fields in a kstat of type `KSTAT_TYPE_NAMED`). Virtual kstats must have the `ks_data` field set at this time. The provider may also set the `ks_update`, `ks_private`, and `ks_lock` fields if necessary.

Once the kstat is completely initialized, `kstat_install` is used to make the kstat accessible to the outside world.

RETURN VALUES

None.

CONTEXT

`kstat_install()` can be called from user or kernel context.

EXAMPLES

EXAMPLE 1 Allocating and Initializing a `kstat` Structure

The method for allocating and initializing a `kstat` structure is generally as follows:

```
kstat_t *ksp;
ksp = kstat_create(module, instance, name, class, type, ndata, flags);
if (ksp) {
         /* ... provider initialization, if necessary */
           kstat_install(ksp);
}
```

SEE ALSO

`kstat_create`(9F), `kstat_delete`(9F), `kstat_named_init`(9F), `kstat`(9S)

Writing Device Drivers

NAME

kstat_named_init – initialize a named kstat

SYNOPSIS

```
#include <sys/types.h>
#include <sys/kstat.h>

void kstat_named_init(kstat_named_t *knp, char *name, uchar_t
     data_type);
```

INTERFACE LEVEL

Solaris DDI specific (Solaris DDI)

PARAMETERS

knp Pointer to a `kstat_named`(9S) structure.

name The name of the statistic.

data_type The type of value. This indicates which field of the `kstat_named`(9S) structure should be used. Valid values are:

`KSTAT_DATA_CHAR`
The "char" field.

`KSTAT_DATA_LONG`
The "long" field.

`KSTAT_DATA_ULONG`
The "unsigned long" field.

`KSTAT_DATA_LONGLONG`
The "long long" field.

`KSTAT_DATA_ULONGLONG`
The "unsigned long long" field.

DESCRIPTION

`kstat_named_init()` associates a name and a type with a `kstat_named`(9S) structure.

RETURN VALUES

None.

CONTEXT

`kstat_named_init()` can be called from user or kernel context.

SEE ALSO

`kstat_create`(9F), `kstat_install`(9F), `kstat`(9S), `kstat_named`(9S)

Writing Device Drivers

NAME

kstat_queue, kstat_waitq_enter, kstat_waitq_exit, kstat_runq_enter, kstat_runq_exit, kstat_waitq_to_runq, kstat_runq_back_to_waitq – update I/O kstat statistics

SYNOPSIS

```
#include <sys/types.h>
#include <sys/kstat.h>

void kstat_waitq_enter(kstat_io_t *kiop);

void kstat_waitq_exit(kstat_io_t *kiop);

void kstat_runq_enter(kstat_io_t *kiop);

void kstat_runq_exit(kstat_io_t *kiop);

void kstat_waitq_to_runq(kstat_io_t *kiop);

void kstat_runq_back_to_waitq(kstat_io_t *kiop);
```

INTERFACE LEVEL

Solaris DDI specific (Solaris DDI)

PARAMETERS

kiop Pointer to a `kstat_io`(9S) structure.

DESCRIPTION

A large number of I/O subsystems have at least two basic "lists" (or queues) of transactions they manage: one for transactions that have been accepted for processing but for which processing has yet to begin, and one for transactions which are actively being processed (but not done). For this reason, two cumulative time statistics are kept: wait (pre-service) time, and run (service) time.

The `kstat_queue()` family of functions manage these times based on the transitions between the driver wait queue and run queue.

`kstat_waitq_enter()`
: `kstat_waitq_enter()` should be called when a request arrives and is placed into a pre-service state (such as just prior to calling `disksort`(9F)).

`kstat_waitq_exit()`
: `kstat_waitq_exit()` should be used when a request is removed from its pre-service state. (such as just prior to calling the driver's `start` routine).

`kstat_runq_enter()`
: `kstat_runq_enter()` is also called when a request is placed in its service state (just prior to calling the driver's start routine, but after `kstat_waitq_exit()`).

`kstat_runq_exit()`
: `kstat_runq_exit()` is used when a request is removed from its service state (just prior to calling `biodone`(9F)).

`kstat_waitq_to_runq()`
: `kstat_waitq_to_runq()` transitions a request from the wait queue to the run queue. This is useful wherever the driver would have normally done a `kstat_waitq_exit()` followed by a call to `kstat_runq_enter()`.

`kstat_runq_back_to_waitq()`
: `kstat_runq_back_to_waitq()` transitions a request from the run queue back to the wait queue. This may be necessary in some cases (write throttling is an

example).

RETURN VALUES

None.

CONTEXT

`kstat_create()` can be called from user or kernel context.

WARNINGS

These transitions must be protected by holding the `kstat`'s `ks_lock`, and must be completely accurate (all transitions are recorded). Forgetting a transition may, for example, make an idle disk appear 100% busy.

SEE ALSO

`biodone`(9F), `disksort`(9F), `kstat_create`(9F), `kstat_delete`(9F), `kstat_named_init`(9F), `kstat`(9S), `kstat_io`(9S)

Writing Device Drivers

NAME

linkb – concatenate two message blocks

SYNOPSIS

```
#include <sys/stream.h>

void linkb(mblk_t *mp1, mblk_t *mp2);
```

INTERFACE LEVEL

Architecture independent level 1 (DDI/DKI).

PARAMETERS

mp1 The message to which *mp2* is to be added. `mblk_t` is an instance of the `msgb`(9S) structure.

mp2 The message to be added.

DESCRIPTION

`linkb()` creates a new message by adding *mp2* to the tail of *mp1*. The continuation pointer, `b_cont`, of *mp1* is set to point to *mp2*.

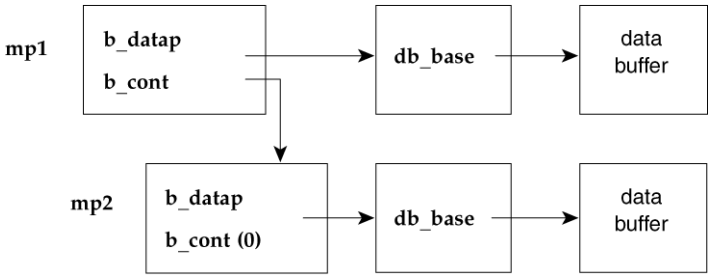

linkb(mp1, mp2);

linkb(mp1, mp2);

CONTEXT

`linkb()` can be called from user or interrupt context.

EXAMPLES

See `dupb`(9F) for an example of using `linkb()`.

SEE ALSO

`dupb`(9F), `unlinkb`(9F), `msgb`(9S)

Writing Device Drivers

STREAMS Programming Guide

NAME

makecom, makecom_g0, makecom_g0_s, makecom_g1, makecom_g5 – make a packet for SCSI commands

SYNOPSIS

```
#include <sys/scsi/scsi.h>

void makecom_g0(struct scsi_pkt *pkt, struct scsi_device *devp, int
     flag, int cmd, int addr, int cnt);

void makecom_g0_s(struct scsi_pkt *pkt, struct scsi_device *devp,
     int flag, int cmd, int cnt, int fixbit);

void makecom_g1(struct scsi_pkt *pkt, struct scsi_device *devp, int
     flag, int cmd, int addr, int cnt);

void makecom_g5(struct scsi_pkt *pkt, struct scsi_device *devp, int
     flag, int cmd, int addr, int cnt);
```

INTERFACE LEVEL

Solaris DDI specific (Solaris DDI).

PARAMETERS

pkt	Pointer to an allocated `scsi_pkt`(9S) structure.
devp	Pointer to the target's `scsi_device`(9S) structure.
flag	Flags for the `pkt_flags` member.
cmd	First byte of a group 0 or 1 or 5 SCSI CDB.
addr	Pointer to the location of the data.
cnt	Data transfer length in units defined by the SCSI device type. For sequential devices *cnt* is the number of bytes. For block devices, *cnt* is the number of blocks.
fixbit	Fixed bit in sequential access device commands.

DESCRIPTION

`makecom` functions initialize a packet with the specified command descriptor block, *devp* and transport flags. The `pkt_address`, `pkt_flags`, and the command descriptor block pointed to by `pkt_cdbp` are initialized using the remaining arguments. Target drivers may use `makecom_g0()` for Group 0 commands (except for sequential access devices), or `makecom_g0_s()` for Group 0 commands for sequential access devices, or `makecom_g1()` for Group 1 commands, or `makecom_g5()` for Group 5 commands. *fixbit* is used by sequential access devices for accessing fixed block sizes and sets the the tag portion of the SCSI CDB.

CONTEXT

These functions can be called from user or interrupt context.

EXAMPLES

EXAMPLE 1 Using `makecom` Functions

```
if (blkno >= (1<<20)) {
      makecom_g1(pkt, SD_SCSI_DEVP, pflag, SCMD_WRITE_G1,
         (int) blkno, nblk);
} else {
      makecom_g0(pkt, SD_SCSI_DEVP, pflag, SCMD_WRITE,
         (int) blkno, nblk);
}
```

EXAMPLE 1 Using `makecom` Functions *(Continued)*

SEE ALSO

`scsi_device`(9S), `scsi_pkt`(9S)

ANSI Small Computer System Interface-2 (SCSI-2)

Writing Device Drivers

NAME

makedevice – make device number from major and minor numbers

SYNOPSIS

```
#include <sys/types.h>
#include <sys/mkdev.h>
#include <sys/ddi.h>

dev_t makedevice(major_t majnum, minor_t minnum);
```

INTERFACE LEVEL

Architecture independent level 1 (DDI/DKI).

PARAMETERS

majnum Major device number.

minnum Minor device number.

DESCRIPTION

`makedevice()` creates a device number from a major and minor device number. `makedevice()` should be used to create device numbers so the driver will port easily to releases that treat device numbers differently.

RETURN VALUES

The device number, containing both the major number and the minor number, is returned. No validation of the major or minor numbers is performed.

CONTEXT

`makedevice()` can be called from user or interrupt context.

SEE ALSO

`getmajor`(9F), `getminor`(9F)

NAME

max – return the larger of two integers

SYNOPSIS

```
#include <sys/ddi.h>

int max(int int1, int int2);
```

INTERFACE LEVEL

Architecture independent level 1 (DDI/DKI).

PARAMETERS

int1 The first integer.

int2 The second integer.

DESCRIPTION

`max()` compares two signed integers and returns the larger of the two.

RETURN VALUES

The larger of the two numbers.

CONTEXT

`max()` can be called from user or interrupt context.

SEE ALSO

`min`(9F)

Writing Device Drivers

NAME

min – return the lesser of two integers

SYNOPSIS

```
#include <sys/ddi.h>

int min(int int1, int int2);
```

INTERFACE LEVEL

Architecture independent level 1 (DDI/DKI).

PARAMETERS

int1 The first integer.

int2 The second integer.

DESCRIPTION

`min()` compares two signed integers and returns the lesser of the two.

RETURN VALUES

The lesser of the two integers.

CONTEXT

`min()` can be called from user or interrupt context.

SEE ALSO

`max`(9F)

Writing Device Drivers

NAME

mkiocb – allocates a STREAMS ioctl block for M_IOCTL messages in the kernel.

SYNOPSIS

```
#include <sys/stream.h>

mblk_t *mkiocb(uint_t command);
```

INTERFACE LEVEL

Solaris DDI specific (Solaris DDI).

PARAMETERS

command The ioctl command for the `ioc_cmd` field.

DESCRIPTION

STREAMS modules or drivers might need to issue an ioctl to a lower module or driver.The `mkiocb()` function tries to allocate (using `allocb`(9F)) a STREAMS `M_IOCTL` message block (`iocblk`(9S)). Buffer allocation fails only when the system is out of memory. If no buffer is available, the `qbufcall`(9F) function can help a module recover from an allocation failure.

The `mkiocb` function returns a `mblk_t` structure which is large enough to hold any of the ioctl messages (`iocblk`(9S), `copyreq`(9S) or `copyresp`(9S)), and has the following special properties:

`b_wptr`	Set to `b_rptr + sizeof(struct iocblk)` .
`b_cont`	Set to `NULL`.
`b_datap->db_type`	Set to `M_IOCTL`.

The fields in the iocblk structure are initialized as follows:

`ioc_cmd`	Set to the command value passed in.
`ioc_id`	Set to a unique identifier.
`ioc_cr`	Set to point to a credential structure encoding the maximum system privilege and which does not need to be freed in any fashion.
`ioc_count`	Set to 0.
`ioc_rval`	Set to 0.
`ioc_error`	Set to 0.
`ioc_flags`	Set to `IOC_NATIVE` to reflect that this is native to the running kernel.

RETURN VALUES

Upon success, the `mkiocb()` function returns a pointer to the allocated `mblk_t` of type `M_IOCTL` .

On failure, it returns a null pointer.

CONTEXT

The `mkiocb()` function can be called from user or interrupt context.

EXAMPLES

EXAMPLE 1 M_IOCTL Allocation

The first example shows an M_IOCTL allocation with the ioctl command TEST_CMD. If the iocblk(9S) cannot be allocated, NULL is returned, indicating an allocation failure (line 5). In line 11, the putnext(9F) function is used to send the message downstream.

```
 1  test_function(queue_t *q, test_info_t *testinfo)
 2  {
 3   mblk_t *mp;
 4
 5   if ((mp = mkiocb(TEST_CMD)) == NULL)
 6       return (0);
 7
 8       /* save off ioctl ID value */
 9       testinfo->xx_iocid = ((struct iocblk *)mp->b_rptr)->ioc_id;
10
11       putnext(q, mp);       /* send message downstream */
12       return (1);
13  }
```

EXAMPLE 2 The ioctl ID Value

During the read service routine, the ioctl ID value for M_IOCACK or M_IOCNACK should equal the ioctl that was previously sent by this module before processing.

```
 1  test_lrsrv(queue_t *q)
 2  {
 3      ...
 4
 5      switch (DB_TYPE(mp)) {
 6      case M_IOCACK:
 7      case M_IOCNACK:
 8          /* Does this match the ioctl that this module sent */
 9          ioc = (struct iocblk*)mp->b_rptr;
10          if (ioc->ioc_id == testinfo->xx_iocid) {
11              /* matches, so process the message */
12              ...
13              freemsg(mp);
14          }
15          break;
16      }
17      ...
18  }
```

EXAMPLE 3 An iocblk Allocation Which Fails

The next example shows an iocblk allocation which fails. Since the open routine is in user context, the caller may block using qbufcall(9F) until memory is available.

```
 1  test_open(queue_t *q, dev_t devp, int oflag, int sflag, cred_t *credp)
 2  {
 3       while ((mp = mkiocb(TEST_IOCTL)) == NULL) {
 4            int id;
 5
```

EXAMPLE 3 An iocblk Allocation Which Fails *(Continued)*

```
            id = qbufcall(q, sizeof (union ioctypes), BPRI_HI,
                dummy_callback, 0);
            /* Handle interrupts */
            if (!qwait_sig(q)) {
                qunbufcall(q, id);
                return (EINTR);
            }
        }
        putnext(q, mp);
}
```

SEE ALSO

`allocb`(9F), `putnext`(9F), `qbufcall`(9F), `qwait_sig`(9F), `copyreq`(9S), `copyresp`(9S), `iocblk`(9S)

Writing Device Drivers

STREAMS Programming Guide

WARNINGS

It is the module's responsibility to remember the ID value of the `M_IOCTL` that was allocated. This will ensure proper cleanup and ID matching when the `M_IOCACK` or `M_IOCNACK` is received.

NAME

mod_install, mod_remove, mod_info – add, remove or query a loadable module

SYNOPSIS

```
#include <sys/modctl.h>

int mod_install(struct modlinkage *modlinkage);

int mod_remove(struct modlinkage *modlinkage);

int mod_info(struct modlinkage *modlinkage, struct modinfo *modinfo);
```

INTERFACE LEVEL

Solaris DDI specific (Solaris DDI).

PARAMETERS

modlinkage Pointer to the loadable module's `modlinkage` structure which describes what type(s) of module elements are included in this loadable module.

modinfo Pointer to the `modinfo` structure passed to `_info`(9E).

DESCRIPTION

`mod_install()` must be called from a module's `_init`(9E) routine.

`mod_remove()` must be called from a module's `_fini`(9E) routine.

`mod_info()` must be called from a module's `_info`(9E) routine.

RETURN VALUES

`mod_install()` and `mod_remove()` return `0` upon success and non-zero on failure. `mod_info()` returns a non-zero value on success and `0` upon failure.

EXAMPLES

See `_init`(9E) for an example that uses these functions.

SEE ALSO

`_fini`(9E), `_info`(9E), `_init`(9E), `modldrv`(9S), `modlinkage`(9S), `modlstrmod`(9S)

Writing Device Drivers

NAME

msgdsize – return the number of bytes in a message

SYNOPSIS

```
#include <sys/stream.h>

size_t msgdsize(mblk_t *mp);
```

INTERFACE LEVEL

Architecture independent level 1 (DDI/DKI).

PARAMETERS

mp Message to be evaluated.

DESCRIPTION

`msgdsize()` counts the number of bytes in a data message. Only bytes included in the data blocks of type `M_DATA` are included in the count.

RETURN VALUES

The number of data bytes in a message, expressed as an integer.

CONTEXT

`msgdsize()` can be called from user or interrupt context.

EXAMPLES

See `bufcall`(9F) for an example that uses `msgdsize()`.

SEE ALSO

`bufcall`(9F)

Writing Device Drivers

STREAMS Programming Guide

NAME

msgpullup – concatenate bytes in a message

SYNOPSIS

```
#include <sys/stream.h>

mblk_t *msgpullup(mblk_t *mp, ssize_t len);
```

INTERFACE LEVEL

Architecture independent level 1 (DDI/DKI).

PARAMETERS

mp Pointer to the message whose blocks are to be concatenated.

len Number of bytes to concatenate.

DESCRIPTION

`msgpullup()` concatenates and aligns the first *len* data bytes of the message pointed to by *mp*, copying the data into a new message. Any remaining bytes in the remaining message blocks will be copied and linked onto the new message. The original message is unaltered. If *len* equals `-1`, all data are concatenated. If *len* bytes of the same message type cannot be found, `msgpullup()` fails and returns `NULL`.

RETURN VALUES

`msgpullup` returns the following values:

`Non-null` Successful completion. A pointer to the new message is returned.

`NULL` An error occurred.

CONTEXT

`msgpullup()` can be called from user or interrupt context.

SEE ALSO

`srv`(9E), `allocb`(9F), `pullupmsg`(9F), `msgb`(9S)

Writing Device Drivers

STREAMS Programming Guide

NOTES

`msgpullup()` is a DKI-compliant replacement for the older `pullupmsg`(9F) routine. Users are strongly encouraged to use `msgpullup()` instead of `pullupmsg`(9F).

NAME

mt-streams – STREAMS multithreading

SYNOPSIS

```
#include <sys/conf.h>
```

INTERFACE LEVEL

Solaris DDI specific (Solaris DDI).

DESCRIPTION

STREAMS drivers configures the degree of concurrency using the `cb_flag` field in the `cb_ops` structure (see `cb_ops`(9S)). The corresponding field for STREAMS modules is the `f_flag` in the `fmodsw` structure.

For the purpose of restricting and controlling the concurrency in drivers/modules, we define the concepts of *inner* and *outer perimeters*. A driver/module can be configured either to have no perimeters, to have only an inner or an outer perimeter, or to have both an inner and an outer perimeter. Each perimeter acts as a readers-writers lock, that is, there can be multiple concurrent readers or a single writer. Thus, each perimeter can be entered in two modes: shared (reader) or exclusive (writer). The mode depends on the perimeter configuration and can be different for the different STREAMS entry points (`open`(9E), `close`(9E), `put`(9E), or `srv`(9E)).

The concurrency for the different entry points is (unless specified otherwise) to enter with exclusive access at the inner perimeter (if present) and shared access at the outer perimeter (if present).

The perimeter configuration consists of flags that define the presence and scope of the inner perimeter, the presence of the outer perimeter (which can only have one scope), and flags that modify the default concurrency for the different entry points.

All MT safe modules/drivers specify the `D_MP` flag.

Inner Perimeter Flags

The inner perimeter presence and scope are controlled by the mutually exclusive flags:

`D_MTPERQ`	The module/driver has an inner perimeter around each queue.
`D_MTQPAIR`	The module/driver has an inner perimeter around each read/write pair of queues.
`D_MTPERMOD`	The module/driver has an inner perimeter that encloses all the module's/driver's queues.
None of the above	The module/driver has no inner perimeter.

Outer Perimeter Flags

The outer perimeter presence is configured using:

`D_MTOUTPERIM`	In addition to any inner perimeter, the module/driver has an outer perimeter that encloses all the module's/driver's queues. This can be combined with all the inner perimeter options except `D_MTPERMOD`.

The default concurrency can be modified using:

D_MTPUTSHARED	This flag modifies the default behavior when put(9E) procedure are invoked so that the inner perimeter is entered shared instead of exclusively.
D_MTOCEXCL	This flag modifies the default behavior when open(9E) and close(9E) procedures are invoked so the the outer perimeter is entered exclusively instead of shared.

The module/driver can use qwait(9F) or qwait_sig() in the open(9E) and close(9E) procedures if it needs to wait "outside" the perimeters.

The module/driver can use qwriter(9F) to upgrade the access at the inner or outer perimeter from shared to exclusive.

The use and semantics of qprocson() and qprocsoff(9F) is independent of the inner and outer perimeters.

SEE ALSO

close(9E), open(9E), put(9E), srv(9E), qprocsoff(9F), qprocson(9F), qwait(9F), qwriter(9F), cb_ops(9S)

STREAMS Programming Guide

Writing Device Drivers

NAME

mutex, mutex_enter, mutex_exit, mutex_init, mutex_destroy, mutex_owned, mutex_tryenter – mutual exclusion lock routines

SYNOPSIS

```
#include <sys/ksynch.h>

void mutex_init(kmutex_t *mp, char *name, kmutex_type_t type, void
     *arg);

void mutex_destroy(kmutex_t *mp);

void mutex_enter(kmutex_t *mp);

void mutex_exit(kmutex_t *mp);

int mutex_owned(kmutex_t *mp);

int mutex_tryenter(kmutex_t *mp);
```

INTERFACE LEVEL

Solaris DDI specific (Solaris DDI).

PARAMETERS

mp	Pointer to a kernel mutex lock (`kmutex_t`).
name	Descriptive string. This is obsolete and should be `NULL`. (Non-`NULL` strings are legal, but they are a waste of kernel memory.)
type	Type of mutex lock.
arg	Type-specific argument for initialization routine.

DESCRIPTION

A mutex enforces a policy of mutual exclusion. Only one thread at a time may hold a particular mutex. Threads trying to lock a held mutex will block until the mutex is unlocked.

Mutexes are strictly bracketing and may not be recursively locked. That is to say, mutexes should be exited in the opposite order they were entered, and cannot be reentered before exiting.

`mutex_init()` initializes a mutex. It is an error to initialize a mutex more than once. The *type* argument should be set to `MUTEX_DRIVER`.

arg provides type-specific information for a given variant type of mutex. When `mutex_init()` is called for driver mutexes, if the mutex is used by the interrupt handler, the *arg* should be the `ddi_iblock_cookie` returned from `ddi_get_iblock_cookie`(9F) or `ddi_get_soft_iblock_cookie`(9F). If the mutex is never used inside an interrupt handler, the argument should be `NULL`.

`mutex_enter()` is used to acquire a mutex. If the mutex is already held, then the caller blocks. After returning, the calling thread is the owner of the mutex. If the mutex is already held by the calling thread, a panic will ensue.

`mutex_owned()` should only be used in `ASSERT()` and may be enforced by not being defined unless the preprocessor symbol `DEBUG` is defined. Its return value is non-zero if the current thread (or, if that cannot be determined, at least some thread) holds the mutex pointed to by *mp*.

`mutex_tryenter()` is very similar to `mutex_enter()` except that it doesn't block when the mutex is already held. `mutex_tryenter()` returns non-zero when it acquired the mutex and 0 when the mutex is already held.

`mutex_exit()` releases a mutex and will unblock another thread if any are blocked on the mutex.

`mutex_destroy()` releases any resources that might have been allocated by `mutex_init()`. `mutex_destroy()` must be called before freeing the memory containing the mutex, and should be called with the mutex unheld (not owned by any thread). The caller must somehow be sure that no other thread will attempt to use the mutex.

RETURN VALUES

`mutex_tryenter()` returns non-zero on success and zero of failure.

`mutex_owned()` returns non-zero if the calling thread currently holds the mutex pointed to by *mp*, or when that cannot be determined, if any thread holds the mutex. `mutex_owned()` returns zero otherwise.

CONTEXT

These functions can be called from user, kernel, or high-level interrupt context, except for `mutex_init()` and `mutex_destroy()`, which can be called from user or kernel context only.

EXAMPLES

EXAMPLE 1 Initializing a Mutex

A driver might do this to initialize a mutex that is part of its unit structure and used in its interrupt routine:

```
ddi_get_iblock_cookie(dip, 0, &iblock);
mutex_init(&un->un_lock, NULL, MUTEX_DRIVER,
          (void *)iblock);
ddi_add_intr(dip, 0, NULL, &dev_cookie, xxintr,
          (caddr_t)un);
```

EXAMPLE 2 Calling a Routine with a Lock

A routine that expects to be called with a certain lock held might have the following ASSERT:

```
xxstart(struct xxunit *un)
{
          ASSERT(mutex_owned(&un->un_lock));
...
```

EXAMPLE 2 Calling a Routine with a Lock *(Continued)*

SEE ALSO

`lockstat`(1M), `condvar`(9F), `ddi_add_intr`(9F), `ddi_get_iblock_cookie`(9F), `ddi_get_soft_iblock_cookie`(9F), `rwlock`(9F), `semaphore`(9F)

Writing Device Drivers

NOTES

Compiling with `_LOCKTEST` or `_MPSTATS` defined no longer has any effect. To gather lock statistics, see `lockstat`(1M).

NAME

nochpoll – error return function for non-pollable devices

SYNOPSIS

```
#include <sys/ddi.h>
#include <sys/sunddi.h>

int nochpoll(dev_t dev, short events, int anyyet, short *reventsp,
     struct pollhead **pollhdrp);
```

INTERFACE LEVEL

Solaris DDI specific (Solaris DDI).

PARAMETERS

dev	Device number.
events	Event flags.
anyyet	Check current events only.
reventsp	Event flag pointer.
pollhdrp	Poll head pointer.

DESCRIPTION

`nochpoll()` is a routine that simply returns the value `ENXIO`. It is intended to be used in the `cb_ops`(9S) structure of a device driver for devices that do not support the `poll`(2) system call.

RETURN VALUES

`nochpoll()` returns `ENXIO`.

CONTEXT

`nochpoll()` can be called from user or interrupt context.

SEE ALSO

`poll`(2), `chpoll`(9E), `cb_ops`(9S)

Writing Device Drivers

NAME

nodev – error return function

SYNOPSIS

```
#include <sys/conf.h>
#include <sys/ddi.h>

int nodev( );
```

INTERFACE LEVEL

Architecture independent level 1 (DDI/DKI).

DESCRIPTION

`nodev()` returns `ENXIO`. It is intended to be used in the `cb_ops`(9S) data structure of a device driver for device entry points which are not supported by the driver. That is, it is an error to attempt to call such an entry point.

RETURN VALUES

`nodev()` returns `ENXIO`.

CONTEXT

`nodev()` can be only called from user context.

SEE ALSO

`nulldev`(9F), `cb_ops`(9S)

Writing Device Drivers

NAME

noenable – prevent a queue from being scheduled

SYNOPSIS

```
#include <sys/stream.h>
#include <sys/ddi.h>

void noenable(queue_t *q);
```

INTERFACE LEVEL

Architecture independent level 1 (DDI/DKI).

PARAMETERS

q Pointer to the queue.

DESCRIPTION

`noenable()` prevents the queue *q* from being scheduled for service by `insq`(9F), `putq`(9F) or `putbq`(9F) when enqueuing an ordinary priority message. The queue can be re-enabled with the `enableok`(9F) function.

CONTEXT

`noenable()` can be called from user or interrupt context.

SEE ALSO

`enableok`(9F), `insq`(9F), `putbq`(9F), `putq`(9F), `qenable`(9F)

Writing Device Drivers

STREAMS Programming Guide

NAME

nulldev – zero return function

SYNOPSIS

```
#include <sys/conf.h>
#include <sys/ddi.h>

int nulldev();
```

INTERFACE LEVEL

Architecture independent level 1 (DDI/DKI).

DESCRIPTION

`nulldev()` returns `0`. It is intended to be used in the `cb_ops`(9S) data structure of a device driver for device entry points that do nothing.

RETURN VALUES

`nulldev()` returns a `0`.

CONTEXT

`nulldev()` can be called from any context.

SEE ALSO

`nodev`(9F), `cb_ops`(9S)

Writing Device Drivers

NAME

nvlist_add_boolean, nvlist_add_byte, nvlist_add_int16, nvlist_add_uint16, nvlist_add_int32, nvlist_add_uint32, nvlist_add_int64, nvlist_add_uint64, nvlist_add_string, nvlist_add_byte_array, nvlist_add_int16_array, nvlist_add_uint16_array, nvlist_add_int32_array, nvlist_add_uint32_array, nvlist_add_int64_array, nvlist_add_uint64_array, nvlist_add_string_array – add new name-value pair to nvlist_t

SYNOPSIS

```
#include <sys/nvpair.h>

int nvlist_add_boolean(nvlist_t *nvl, char *name);

int nvlist_add_byte(nvlist_t *nvl, char *name, uchar_t val);

int nvlist_add_int16(nvlist_t *nvl, char *name, int16_t val);

int nvlist_add_uint16(nvlist_t *nvl, char *name, uint16_t val);

int nvlist_add_int32(nvlist_t *nvl, char *name, int32_t val);

int nvlist_add_uint32(nvlist_t *nvl, char *name, uint32_t val);

int nvlist_add_int64(nvlist_t *nvl, char *name, int64_t val);

int nvlist_add_uint64(nvlist_t *nvl, char *name, uint64_t val);

int nvlist_add_string(nvlist_t *nvl, char *name, char *val);

int nvlist_add_byte_array(nvlist_t *nvl, char *name, uchar_t *val,
     uint_t nelem);

int nvlist_add_int16_array(nvlist_t *nvl, char *name, int16_t *val,
     uint_t nelem);

int nvlist_add_uint16_array(nvlist_t *nvl, char *name, uint16_t
     *val, uint_t nelem);

int nvlist_add_int32_array(nvlist_t *nvl, char *name, int32_t *val,
     uint_t nelem);

int nvlist_add_uint32_array(nvlist_t *nvl, char *name, uint32_t
     *val, uint_t nelem);

int nvlist_add_int64_array(nvlist_t *nvl, char *name, int64_t *val,
     uint_t nelem);

int nvlist_add_uint64_array(nvlist_t *nvl, char *name, uint64_t
     *val, uint_t nelem);

int nvlist_add_string_array(nvlist_t *nvl, char *name, char **val,
     uint_t nelem);
```

INTERFACE LEVEL

Solaris DDI specific (Solaris DDI)

PARAMETERS

nvl The `nvlist_t` to be processed.

name Name of the name-value pair (`nvpair`).

nelem	Number of elements in value (that is, array size).
val	Value or starting address of the array value.

DESCRIPTION

These functions adds a new name-value pair to `nvlist_t`. The memory allocation policy follows that specified in `nvlist_alloc()`, `nvlist_unpack()`, or `nvlist_dup()`. See `nvlist_alloc`(9F). The uniqueness of `nvpair` name and data types follow the *nvflag* argument specified in `nvlist_alloc()`.

If `NV_UNIQUE_NAME` was specified for *nvflag*, existing `nvpairs` with matching names are removed before the new `nvpair` is added.

If `NV_UNIQUE_NAME_TYPE` was specified for *nvflag*, existing `nvpairs` with matching names and data types are removed before the new `nvpair` is added.

If neither was specified for *nvflag*, the new `nvpair` is unconditionally added at the end of the list. The library preserves the order of the name-value pairs across packing, unpacking, and duplication.

RETURN VALUES

`0`	success
`EINVAL`	invalid argument
`ENOMEM`	insufficient memory

CONTEXT

These functions can be called from interrupt context only if the `nvlist_t` was allocated with the `KM_NOSLEEP` flag set. See `nvlist_alloc`(9F) for a description of `KM_NOSLEEP`. These functions can be called from user context in all cases.

NAME

nvlist_alloc, nvlist_free, nvlist_size, nvlist_pack, nvlist_unpack, nvlist_dup – manage a name-value pair list

SYNOPSIS

```
#include <sys/nvpair.h>

int nvlist_alloc(nvlist_t **nvlp, uint_t nvflag, int kmflag);

void nvlist_free(nvlist_t *nvl);

int nvlist_size(nvlist_t *nvl, size_t *size, int encoding);

int nvlist_pack(nvlist_t *nvl, char **bufp, size_t *buflen, int
    encoding, int kmflag);

int nvlist_unpack(char *buf, nvlist_t **nvlp, int kmflag);

int nvlist_dup(nvlist_t *nvl, nvlist_t **nvlp, int kmflag);
```

INTERFACE LEVEL

Solaris DDI specific (Solaris DDI)

PARAMETERS

nvlp Address of a pointer to list of name-value pairs (`nvlist_t`).

nvflag Specify bit fields defining `nvlist_t` properties:

- `NV_UNIQUE_NAME` The `nvpair` names are unique.
- `NV_UNIQUE_NAME_TYPE` Name-data type combination is unique

kmflag Kernel memory allocation policy, either `KM_SLEEP` or `KM_NOSLEEP`.

nvl The `nvlist_t` to be processed.

size Pointer to buffer to contain the encoded size.

bufp Address of buffer to pack `nvlist` into. Must be 8-byte aligned. If NULL, library will allocate memory.

buflen Size of buffer *bufp* points to.

buf Buffer containing packed `nvlist_t`.

encoding Encoding method for packing.

DESCRIPTION

The `nvlist_alloc()` function allocates a new name-value pair list and updates *nvlp* to point to the handle. The argument *nvflag* specifies `nvlist_t` properties to remain persistent across packing, unpacking, and duplication.

The `nvlist_free()` function frees a name-value pair list.

The `nvlist_size()` function returns the minimum size of a contiguous buffer large enough to pack *nvl*. The *encoding* parameter specifies the method of encoding when packing *nvl*. The supported encoding method is:

`NV_ENCODE_NATIVE` Straight `bcopy()` as described in `bcopy`(9F).

The `nvlist_pack()` function packs *nvl* into contiguous memory starting at **bufp*. The *encoding* parameter specifies the method of encoding (see above).

- If **bufp* is not NULL, **bufp* is expected to be a caller-allocated buffer of size **buflen*. The *kmflag* argument is ignored.
- If **bufp* is NULL, the library will allocate memory and update **bufp* to point to the memory and update **buflen* to contain the size of the allocated memory. The value of *kmflag* indicates the memory allocation policy

The `nvlist_unpack()` function takes a buffer with a packed `nvlist_t` and unpacks it into a searchable `nvlist_t`. The library allocates memory for `nvlist_t`. The caller is responsible for freeing the memory by calling `nvlist_free()`.

The `nvlist_dup()` function makes a copy of *nvl* and updates *nvlp* to point to the copy.

RETURN VALUES

For `nvlist_alloc()`, `nvlist_dup()`:

`0`	success
`EINVAL`	invalid argument
`ENOMEM`	insufficient memory

For `nvlist_pack()`, `nvlist_unpack()`:

`0`	success
`EINVAL`	invalid argument
`ENOMEM`	insufficient memory
`EFAULT`	encode/decode error
`ENOTSUP`	encode/decode method not supported

For `nvlist_size()`:

`0`	success
`EINVAL`	invalid argument

CONTEXT

The `nvlist_alloc()`, `nvlist_pack()`, `nvlist_unpack()`, and `nvlist_dup()` functions can be called from interrupt context only if the `KM_NOSLEEP` flag is set. They can be called from user context with any valid flag.

NAME

nvlist_lookup_boolean, nvlist_lookup_byte, nvlist_lookup_int16, nvlist_lookup_uint16, nvlist_lookup_int32, nvlist_lookup_uint32, nvlist_lookup_int64, nvlist_lookup_uint64, nvlist_lookup_string, nvlist_lookup_byte_array, nvlist_lookup_int16_array, nvlist_lookup_uint16_array, nvlist_lookup_int32_array, nvlist_lookup_uint32_array, nvlist_lookup_int64_array, nvlist_lookup_uint64_array, nvlist_lookup_string_array – match name and type indicated by the interface name and retrieve data value

SYNOPSIS

```
#include <sys/nvpair.h>

int nvlist_lookup_boolean(nvlist_t *nvl, char *name);

int nvlist_lookup_byte(nvlist_t *nvl, char *name, uchar_t *val);

int nvlist_lookup_int16(nvlist_t *nvl, char *name, int16_t *val);

int nvlist_lookup_uint16(nvlist_t *nvl, char *name, uint16_t *val);

int nvlist_lookup_int32(nvlist_t *nvl, char *name, int32_t *val);

int nvlist_lookup_uint32(nvlist_t *nvl, char *name, uint32_t *val);

int nvlist_lookup_int64(nvlist_t *nvl, char *name, int64_t *val);

int nvlist_lookup_uint64(nvlist_t *nvl, char *name, uint64_t *val);

int nvlist_lookup_string(nvlist_t *nvl, char *name, char **val);

int nvlist_lookup_byte_array(nvlist_t *nvl, char *name, uchar_t
    **val, uint_t *nelem);

int nvlist_lookup_int16_array(nvlist_t *nvl, char *name, int16_t
    **val, uint_t *nelem);

int nvlist_lookup_uint16_array(nvlist_t *nvl, char *name, uint16_t
    **val, uint_t *nelem);

int nvlist_lookup_int32_array(nvlist_t *nvl, char *name, int32_t
    **val, uint_t *nelem);

int nvlist_lookup_uint32_array(nvlist_t *nvl, char *name, uint32_t
    **val, uint_t *nelem);

int nvlist_lookup_int64_array(nvlist_t *nvl, char *name, int64_t
    **val, uint_t *nelem);

int nvlist_lookup_uint64_array(nvlist_t *nvl, char *name, uint64_t
    **val, uint_t *nelem);

int nvlist_lookup_string_array(nvlist_t *nvl, char *name, char
    ***val, uint_t *nelem);
```

INTERFACE LEVEL

Solaris DDI specific (Solaris DDI)

PARAMETERS

nvl The list of name-value pairs (`nvlist_t`) to be processed.

name Name of the name-value pair (`nvpair`) to search.

nelem	Address to store the number of elements in value.
val	Address to store the value or starting address of the array value.

DESCRIPTION

These functions find the `nvpair` that matches the name and type as indicated by the interface name. If one is found, *nelem* and *val* are modified to contain the number of elements in value and the starting address of data, respectively.

These interfaces work for `nvlist_ts` allocated with `NV_UNIQUE_NAME` or `NV_UNIQUE_NAME_TYPE` specified in `nvlist_alloc()`. (See `nvlist_alloc`(9F).) If this is not the case, the interface will return `ENOTSUP` because the list potentially contains multiple `nvpairs` with the same name and type.

All memory required for storing the array elements, including string values, are managed by the library. References to such data remain valid until `nvlist_free()` is called on *nvl*.

RETURN VALUES

`0`	success
`EINVAL`	invalid argument
`ENOENT`	no matching name-value pair found
`ENOTSUP`	encode/decode method not supported

CONTEXT

These functions can be called from user or interrupt contexts.

NAME

nvlist_next_nvpair, nvpair_name, nvpair_type – return data regarding name-value pairs

SYNOPSIS

```
#include <sys/nvpair.h>

nvpair_t *nvlist_next_nvpair(nvlist_t *nvl, nvpair_t *nvpair);

char *nvpair_name(nvpair_t *nvpair);

data_type_t nvpair_type(nvpair_t *nvpair);
```

INTERFACE LEVEL

Solaris DDI specific (Solaris DDI)

PARAMETERS

nvl The list of name-value pairs (`nvlist_t`) to be processed.

nvpair Handle to a name-value pair.

DESCRIPTION

The `nvlist_next_nvpair()` function returns a handle to the next name-value pair (`nvpair`) in the list following *nvpair*. If *nvpair* is NULL, the first pair is returned. If *nvpair* is the last pair in the `nvlist_t`, NULL is returned.

The `nvpair_name()` function returns a string containing the name of *nvpair*.

The `nvpair_type()` function retrieves the value of the *nvpair* in the form of enumerated type `data_type_t`. This is used to determine the appropriate `nvpair_*()` function to call for retrieving the value.

RETURN VALUES

For `nvpair_name()`:

- String containing the name.

For `nvpair_type()`:

- An enumerated data type.

For `nvlist_next_pair()`:

`NULL` Reached end of list.

otherwise: Handle to next `nvpair` in the list.

CONTEXT

The functions described here can be called from user or interrupt context.

NAME

nvlist_remove, nvlist_remove_all – remove name-value pairs

SYNOPSIS

```
#include <sys/nvpair.h>

void nvlist_remove(nvlist_t *nvl, char *name, data_type_t type);

void nvlist_remove_all(nvlist_t *nvl, char *name);
```

INTERFACE LEVEL

Solaris DDI specific (Solaris DDI)

PARAMETERS

nvl The list of name-value pairs (`nvlist_t`) to be processed.

name Name of the name-value pair (`nvpair`) to be removed.

type Data type of the `nvpair` to be removed.

DESCRIPTION

The `nvlist_remove()` function removes the first occurrence of *nvpair* that matches the name and the type.

The `nvlist_remove_all()` function removes all occurrences of *nvpair* that match the name, regardless of type.

RETURN VALUES

None

CONTEXT

The `nvlist_remove()` and `nvlist_remove_all()` functions can be called from user or interrupt context.

NAME

nvpair_value_byte, nvpair_value_int16, nvpair_value_uint16, nvpair_value_int32, nvpair_value_uint32, nvpair_value_int64, nvpair_value_uint64, nvpair_value_string, nvpair_value_byte_array, nvpair_value_int16_array, nvpair_value_uint16_array, nvpair_value_int32_array, nvpair_value_uint32_array, nvpair_value_int64_array, nvpair_value_uint64_array, nvpair_value_string_array – retrieve value from a name-value pair

SYNOPSIS

```
#include <sys/nvpair.h>

int nvpair_value_byte(nvpair_t *nvpair, uchar_t *val);

int nvpair_value_int16(nvpair_t *nvpair, int16_t *val);

int nvpair_value_uint16(nvpair_t *nvpair, uint16_t *val);

int nvpair_value_int32(nvpair_t *nvpair, int32_t *val);

int nvpair_value_uint32(nvpair_t *nvpair, uint32_t *val);

int nvpair_value_int64(nvpair_t *nvpair, int64_t *val);

int nvpair_value_uint64(nvpair_t *nvpair, uint64_t *val);

int nvpair_value_string(nvpair_t *nvpair, char **val);

int nvpair_value_byte_array(nvpair_t *nvpair, uchar_t **val, uint_t
    *nelem);

int nvpair_value_int16_array(nvpair_t *nvpair, int16_t **val,
    uint_t *nelem);

int nvpair_value_uint16_array(nvpair_t *nvpair, uint16_t **val,
    uint_t *nelem);

int nvpair_value_int32_array(nvpair_t *nvpair, int32_t **val,
    uint_t *nelem);

int nvpair_value_uint32_array(nvpair_t *nvpair, uint32_t **val,
    uint_t *nelem);

int nvpair_value_int64_array(nvpair_t *nvpair, int64_t **val,
    uint_t *nelem);

int nvpair_value_uint64_array(nvpair_t *nvpair, uint64_t **val,
    uint_t *nelem);

int nvpair_value_string_array(nvpair_t *nvpair, char ***val, uint_t
    *nelem);
```

INTERFACE LEVEL

Solaris DDI specific (Solaris DDI)

PARAMETERS

nvpair	Name-value pair (`nvpair`) to be processed.
nelem	Address to store the number of elements in value.
val	Address to store the value or starting address of array value.

DESCRIPTION

These functions retrieve the value of *nvpair*. The data type of *nvpair* must match the function name for the call to be successful.

There is no `nvpair_value_boolean()`; the existence of the name implies the value is true.

For array data types, including string, the memory containing the data is managed by the library and references to the value remains valid until `nvlist_free()` is called on the `nvlist_t` from which *nvpair* is obtained. See `nvlist_free`(9F)

RETURN VALUES

`0`	Success
`EINVAL`	Either one of the arguments is NULL or type of *nvpair* does not match the interface name.

CONTEXT

These functions can be called from user or interrupt context.

NAME

OTHERQ, otherq – get pointer to queue's partner queue

SYNOPSIS

```
#include <sys/stream.h>
#include <sys/ddi.h>

queue_t *OTHERQ(queue_t *q);
```

INTERFACE LEVEL

Architecture independent level 1 (DDI/DKI).

PARAMETERS

q Pointer to the queue.

DESCRIPTION

The `OTHERQ()` function returns a pointer to the other of the two `queue` structures that make up a STREAMS module or driver. If *q* points to the read queue the write queue will be returned, and vice versa.

RETURN VALUES

`OTHERQ()` returns a pointer to a queue's partner.

CONTEXT

`OTHERQ()` can be called from user or interrupt context.

EXAMPLES

EXAMPLE 1 Setting Queues

This routine sets the minimum packet size, the maximum packet size, the high water mark, and the low water mark for the read and write queues of a given module or driver. It is passed either one of the queues. This could be used if a module or driver wished to update its queue parameters dynamically.

```
void
set_q_params(q, min, max, hi, lo)
    queue_t *q;
    short min;
    short max;
    ushort_t hi;
    ushort_t lo;
{
        q->q_minpsz = min;
        q->q_maxpsz = max;
        q->q_hiwat = hi;
        q->q_lowat = lo;
        OTHERQ(q)->q_minpsz = min;
        OTHERQ(q)->q_maxpsz = max;
        OTHERQ(q)->q_hiwat = hi;
        OTHERQ(q)->q_lowat = lo;
}
```

SEE ALSO

Writing Device Drivers

STREAMS Programming Guide

NAME

outb, outw, outl, repoutsb, repoutsw, repoutsd – write to an I/O port

SYNOPSIS

```
#include <sys/ddi.h>
 #include <sys/sunddi.h>
```

```
void outb(int port, unsigned char value);
void outw(int port, unsigned short value);
void outl(int port, unsigned long value);
void repoutsb(int port, unsigned char *addr, int count);
void repoutsw(int port, unsigned short *addr, int count);
void repoutsd(int port, unsigned long *addr, int count);
```

INTERFACE LEVEL

Solaris IA DDI specific (Solaris IA DDI).

PARAMETERS

port	A valid I/O port address.
value	The data to be written to the I/O port.
addr	The address of a buffer from which the values will be fetched.
count	The number of values to be written to the I/O port.

DESCRIPTION

These routines write data of various sizes to the I/O port with the address specified by *port*.

The `outb()`, `outw()`, and `outl()` functions write 8 bits, 16 bits, and 32 bits of data respectively, writing the data specified by *value*.

The `repoutsb()`, `repoutsw()`, and `repoutsd()` functions write multiple 8-bit, 16-bit, and 32-bit values, respectively. *count* specifies the number of values to be written. *addr* is a pointer to a buffer from which the output values are fetched.

CONTEXT

These functions may be called from user or interrupt context.

ATTRIBUTES

See `attributes`(5) for descriptions of the following attributes:

ATTRIBUTE TYPE	ATTRIBUTE VALUE
Architecture	IA

SEE ALSO

`eisa`(4), `isa`(4), `attributes`(5), `inb`(9F)

Writing Device Drivers

NAME

pci_config_get8, pci_config_get16, pci_config_get32, pci_config_get64, pci_config_put8, pci_config_put16, pci_config_put32, pci_config_put64, pci_config_getb, pci_config_getl, pci_config_getll, pci_config_getw, pci_config_putb, pci_config_putl, pci_config_putll, pci_config_putw – read or write single datum of various sizes to the PCI Local Bus Configuration space

SYNOPSIS

```
#include <sys/ddi.h>
#include <sys/sunddi.h>
```

`uint8_t` **`pci_config_get8`**`(ddi_acc_handle_t` *handle*`, off_t` *offset*`);`

`uint16_t` **`pci_config_get16`**`(ddi_acc_handle_t` *handle*`, off_t` *offset*`);`

`uint32_t` **`pci_config_get32`**`(ddi_acc_handle_t` *handle*`, off_t` *offset*`);`

`uint64_t` **`pci_config_get64`**`(ddi_acc_handle_t` *handle*`, off_t` *offset*`);`

`void` **`pci_config_put8`**`(ddi_acc_handle_t` *handle*`, off_t` *offset*`, uint8_t` *value*`);`

`void` **`pci_config_put16`**`(ddi_acc_handle_t` *handle*`, off_t` *offset*`, uint16_t` *value*`);`

`void` **`pci_config_put32`**`(ddi_acc_handle_t` *handle*`, off_t` *offset*`, uint32_t` *value*`);`

`void` **`pci_config_put64`**`(ddi_acc_handle_t` *handle*`, off_t` *offset*`, uint64_t` *value*`);`

INTERFACE LEVEL

Solaris DDI specific (Solaris DDI).

PARAMETERS

handle The data access handle returned from `pci_config_setup`(9F).

offset Byte offset from the beginning of the PCI Configuration space.

value Output data.

DESCRIPTION

These routines read or write a single datum of various sizes from or to the PCI Local Bus Configuration space. The `pci_config_get8()`, `pci_config_get16()`, `pci_config_get32()`, and `pci_config_get64()` functions read 8 bits, 16 bits, 32 bits, and 64 bits of data, respectively. The `pci_config_put8()`, `pci_config_put16()`, `pci_config_put32()`, and `pci_config_put64()` functions write 8 bits, 16 bits, 32 bits, and 64 bits of data, respectively. The *offset* argument must be a multiple of the datum size.

Since the PCI Local Bus Configuration space is represented in little endian data format, these functions translate the data from or to native host format to or from little endian format.

`pci_config_setup`(9F) must be called before invoking these functions.

RETURN VALUES

`pci_config_get8()`, `pci_config_get16()`, `pci_config_get32()`, and `pci_config_get64()` return the value read from the PCI Local Bus Configuration space.

CONTEXT

These routines can be called from user, kernel, or interrupt context.

ATTRIBUTES

See `attributes`(5) for descriptions of the following attributes:

ATTRIBUTE TYPE	ATTRIBUTE VALUE
Architecture	PCI Local Bus

SEE ALSO

`attributes`(5), `pci_config_setup`(9F), `pci_config_teardown`(9F)

NOTES

These functions are specific to PCI bus device drivers. For drivers using these functions, a single source to support devices with multiple bus versions may not be easy to maintain.

The functions described in this manual page previously used symbolic names which specified their data access size; the function names have been changed so they now specify a fixed-width data size. See the following table for the new name equivalents:

Previous Name	New Name
`pci_config_getb`	`pci_config_get8`
`pci_config_getw`	`pci_config_get16`
`pci_config_getl`	`pci_config_get32`
`pci_config_getll`	`pci_config_get64`
`pci_config_putb`	`pci_config_put8`
`pci_config_putw`	`pci_config_put16`
`pci_config_putl`	`pci_config_put32`
`pci_config_putll`	`pci_config_put64`

NAME

pci_config_setup, pci_config_teardown – setup or tear down the resources for enabling accesses to the PCI Local Bus Configuration space

SYNOPSIS

```
#include <sys/ddi.h>
 #include <sys/sunddi.h>
```

`int` **`pci_config_setup`**`(dev_info_t` *`*dip`*`, ddi_acc_handle_t` *`*handle`*`);`

`void` **`pci_config_teardown`**`(ddi_acc_handle_t` *`*handle`*`);`

INTERFACE LEVEL

Solaris DDI specific (Solaris DDI).

PARAMETERS

dip Pointer to the device's `dev_info` structure.

handle Pointer to a data access handle.

DESCRIPTION

`pci_config_setup()` sets up the necessary resources for enabling subsequent data accesses to the PCI Local Bus Configuration space. `pci_config_teardown()` reclaims and removes those resources represented by the data access handle returned from `pci_config_setup()`.

RETURN VALUES

`pci_config_setup()` returns:

`DDI_SUCCESS` Successfully setup the resources.

`DDI_FAILURE` Unable to allocate resources for setup.

CONTEXT

`pci_config_setup()` must be called from user or kernel context. `pci_config_teardown()` can be called from any context.

NOTES

These functions are specific to PCI bus device drivers. For drivers using these functions, a single source to support devices with multiple bus versions may not be easy to maintain.

ATTRIBUTES

See `attributes`(5) for descriptions of the following attributes:

ATTRIBUTE TYPE	ATTRIBUTE VALUE
Architecture	PCI Local Bus

SEE ALSO

`attributes`(5)

IEEE 1275 PCI Bus Binding

NAME

pci_report_pmcap – Report Power Management capability of a PCI device

SYNOPSIS

```
#include <sys/ddi.h>
#include <sys/sunddi.h>
```

int **pci_report_pmcap**(dev_info_t **dip*, int *cap*, void **arg*);

INTERFACE LEVEL

Solaris DDI specific (Solaris DDI)

PARAMETERS

dip	Pointer to the device's dev_info structure
cap	Power management capability
arg	Argument for the capability

DESCRIPTION

Some PCI devices provide power management capabilities in addition to those provided by the PCI Power Management Specification. The pci_report_pmcap(9F) function reports those Power Management capabilities of the PCI device to the framework. Framework supports dynamic changing of the capability by allowing pci_report_pmcap(9F) to be called multiple times. Following are the supported capabilities as indicated by the cap:

PCI_PM_IDLESPEED — The PCI_PM_IDLESPEED value indicates the lowest PCI clock speed that a device can tolerate when idle, and is applicable only to 33 MHz PCI bus. arg represents the lowest possible idle speed in KHz. The integer value representing the speed should be cast to (void *) before passing as arg to pci_report_pmcap(9F).

The special values of arg are:

PCI_PM_IDLESPEED_ANY	The device can tolerate any idle clock speed.
PCI_PM_IDLESPEED_NONE	The device cannot tolerate slowing down of PCI clock even when idle.

If the driver doesn't make this call, PCI_PM_IDLESPEED_NONE is assumed. In this case, one offending device can keep the entire bus from being power managed.

RETURN VALUES

The pci_report_pmcap(9F) function returns:

DDI_SUCCESS	Successful reporting of the capability
DDI_FAILURE	Failure to report capability because of invalid argument(s)

CONTEXT

The pci_report_pmcap(9F) function can be called from user, kernel and interrupt context.

EXAMPLES

1. A device driver knows that the device it controls works with any clock between DC and 33 MHz as specified in *Section 4.2.3.1: Clock Specification* of the *PCI Bus Specification Revision 2.1*. The device driver makes the following call from its attach(9E):

```
if (pci_report_pmcap(dip, PCI_PM_IDLESPEED, PCI_PM_IDLESPEED_ANY) !=
            DDI_SUCCESS)
                cmn_err(CE_WARN, "%s%d: pci_report_pmcap failed\n",
```

```
                    ddi_driver_name(dip), ddi_get_instance(dip));
```

2. A device driver controls a 10/100 Mb Ethernet device which runs the device state machine on the chip from the PCI clock. For the device state machine to receive packets at 100 Mb, the PCI clock cannot drop below 4 MHz. The driver makes the following call whenever it negotiates a 100 Mb Ethernet connection:

```
if (pci_report_pmcap(dip,  PCI_PM_IDLESPEED, (void *)4096) !=
               DDI_SUCCESS)
                cmn_err(CE_WARN, "%s%d: pci_report_pmcap failed\n",
                    ddi_driver_name(dip), ddi_get_instance(dip));
```

ATTRIBUTES

See `attributes`(5) for descriptions of the following attributes:

ATTRIBUTE TYPE	ATTRIBUTE VALUE
Interface Stability	Evolving

SEE ALSO

Writing Device Drivers

PCI Bus Power Management Interface Specification Version 1.1

PCI Bus Specification Revision 2.1

NAME

physio, minphys – perform physical I/O

SYNOPSIS

```
#include <sys/types.h>
#include <sys/buf.h>
#include <sys/uio.h>

int physio(int (*strat )(struct buf *), struct buf *bp, dev_t dev, int
     rw, void (*mincnt )(struct buf *), struct uio *uio);

voidminphys(struct buf *bp);
```

INTERFACE LEVEL

Solaris DDI specific (Solaris DDI).

PARAMETERS

physio()

strat	Pointer to device strategy routine.
bp	Pointer to a `buf`(9S) structure describing the transfer. If *bp* is set to `NULL` then `physio()` allocates one which is automatically released upon completion.
dev	The device number.
rw	Read/write flag. This is either `B_READ` when reading from the device, or `B_WRITE` when writing to the device.
mincnt	Routine which bounds the maximum transfer unit size.
uio	Pointer to the `uio` structure which describes the user I/O request.

minphys()

bp	Pointer to a `buf` structure.

DESCRIPTION

`physio()` performs unbuffered I/O operations between the device *dev* and the address space described in the `uio` structure.

Prior to the start of the transfer `physio()` verifies the requested operation is valid by checking the protection of the address space specified in the `uio` structure. It then locks the pages involved in the I/O transfer so they can not be paged out. The device strategy routine, `strat()`, is then called one or more times to perform the physical I/O operations. `physio()` uses `biowait`(9F) to block until `strat()` has completed each transfer. Upon completion, or detection of an error, `physio()` unlocks the pages and returns the error status.

`physio()` uses `mincnt()` to bound the maximum transfer unit size to the system, or device, maximum length. `minphys()` is the system `mincnt()` routine for use with `physio()` operations. Drivers which do not provide their own local `mincnt()` routines should call `physio()` with `minphys()`.

`minphys()` limits the value of *bp*`->b_bcount` to a sensible default for the capabilities of the system. Drivers that provide their own `mincnt()` routine should also call `minphys()` to make sure they do not exceed the system limit.

RETURN VALUES

`physio()` returns:

`0`	Upon success.
`non-zero`	Upon failure.

CONTEXT

`physio()` can be called from user context only.

SEE ALSO

`strategy`(9E), `biodone`(9F), `biowait`(9F), `buf`(9S), `uio`(9S)

Writing Device Drivers

WARNINGS

Since `physio()` calls `biowait()` to block until each buf transfer is complete, it is the drivers responsibility to call `biodone`(9F) when the transfer is complete, or `physio()` will block forever.

NAME

pm_busy_component, pm_idle_component – Control device component availability for Power Management

SYNOPSIS

```
#include <sys/ddi.h>
#include <sys/sunddi.h>
```

```
int pm_busy_component(dev_info_t *dip, int component);
```

```
int pm_idle_component(dev_info_t *dip, int component);
```

INTERFACE LEVEL

Solaris DDI specific (Solaris DDI)

PARAMETERS

pm_busy_component

dip Pointer to the device's `dev_info` structure.

component The number of the component to be power-managed.

pm_idle_component

dip Pointer to the device's `dev_info` structure.

component The number of the component to be power-managed.

DESCRIPTION

The `pm_busy_component()` function sets *component* of *dip* to be busy. Calls to `pm_busy_component()` are stacked, requiring a corresponding number of calls to `pm_idle_component()` to make the component idle again. When a device is busy it will not be power-managed by the system.

The `pm_idle_component()` function marks *component* idle, recording the time that *component* went idle. This function must be called once for each call to `pm_busy_component()`. A component which is idle is available to be power-managed by the system. The `pm_idle_component()` function has no effect if the component is already idle, except to update the system's notion of when the device went idle.

RETURN VALUES

The `pm_busy_component()` and `pm_idle_component()` functions return:

`DDI_SUCCESS` Successfully set the indicated component busy or idle.

`DDI_FAILURE` Invalid component number *component* or the device has no components.

CONTEXT

These functions can be called from user or kernel context. These functions may also be called from interrupt context, providing they are not the first Power Managment function called by the driver.

ATTRIBUTES

See `attributes`(5) for descriptions of the following attributes:

ATTRIBUTE TYPE	ATTRIBUTE VALUE
Interface stability	Evolving

SEE ALSO `power.conf`(4), `pm`(7D), `pm`(9), `pm-components`(9), `pm_create_components`(9F), `pm_destroy_components`(9F), `pm_raise_power`(9F)

Writing Device Drivers

NAME

pm_create_components, pm_destroy_components – Create or destroy power-manageable components

SYNOPSIS

```
#include <sys/ddi.h>
#include <sys/sunddi.h>
```

```
int pm_create_components(dev_info_t *dip, int components);
```

```
void pm_destroy_components(dev_info_t *dip);
```

INTERFACE LEVEL

Solaris DDI specific (Solaris DDI).

PARAMETERS

dip Pointer to the device's `dev_info` structure

components Number of components to create

DESCRIPTION

The `pm_create_components()` and `pm_destroy_components()` functions are now obsolete and will be removed in a future release. It is recommended that the driver use `pm-components`(9) instead.

The `pm_create_components()` function creates power-manageable components for a device. It should be called from the driver's `attach`(9E) entry point if the device has power-manageable components.

The correspondence of components to parts of the physical device controlled by the driver are the responsibility of the driver.

The `pm_destroy_components()` function removes all components from the device. It should be called from the driver's `detach`(9E) entry point.

RETURN VALUES

The `pm_create_components()` function returns:

`DDI_SUCCESS` Components are successfully created.

`DDI_FAILURE` The device already has components.

CONTEXT

These functions may be called from user or kernel context.

ATTRIBUTES

See `attributes`(5) for descriptions of the following attributes:

ATTRIBUTE TYPE	ATTRIBUTE VALUE
Interface stability	Obsolete

SEE ALSO

`power.conf`(4), `pm`(7D), `pm-components`(9), `attach`(9E), `detach`(9E), `pm`(9), `pm_busy_component`(9F), `pm_idle_component`(9F)

Writing Device Drivers

NAME

pm_get_normal_power, pm_set_normal_power – Get or set a device component's normal power level

SYNOPSIS

```
#include <sys/ddi.h>
#include <sys/sunddi.h>

int pm_get_normal_power(dev_info_t *dip, int component);

void pm_set_normal_power(dev_info_t *dip, int component, int level);
```

INTERFACE LEVEL

Solaris DDI specific (Solaris DDI)

PARAMETERS

pm_get_normal_power

dip	Pointer to the device's *dev_info* structure
component	Number of component from which to get normal power level

pm_set_normal_power

dip	Pointer to the device's *dev_info* structure
component	Number of component for which to set normal power level
level	Component's new normal power level

DESCRIPTION

The `pm_get_normal_power()` and `pm_set_normal_power()` functions are now obsolete and will be removed in a future release. It is recommended that device drivers use new automatic device Power Management interfaces.

The `pm_get_normal_power()` function returns the normal power level of *component* of the device *dip*.

The `pm_set_normal_power()` function sets the normal power level of *component* of the device *dip* to *level*.

When a device has been power managed and is being returned to a state to be used by the system, it will be brought to its normal power level. Except for a power level of *0*, which is defined by the system to mean "powered off," the interpretation of the meaning of the power level is entirely up to the driver.

RETURN VALUES

The `pm_get_normal_power()` function returns:

level	The normal power level of the specified component (a positive integer).
`DDI_FAILURE`	Invalid component number *component* or the device has no components.

CONTEXT

These functions can be called from user or kernel context.

ATTRIBUTES

See `attributes`(5) for descriptions of the following attributes:

ATTRIBUTE TYPE	ATTRIBUTE VALUE
Interface stability	Obsolete

SEE ALSO

`power.conf`(4), `pm`(7D), `pm`(9), `power`(9E), `pm_busy_component`(9F), `pm_create_components`(9F), `pm_destroy_components`(9F), `pm_idle_component`(9F)

Writing Device Drivers

NAME

pm_power_has_changed – Notify Power Management framework of autonomous power level change

SYNOPSIS

```
#include <sys/ddi.h>
#include <sys/sunddi.h>
```

`int` **`pm_power_has_changed`**`(dev_info_t *`*dip*`, int` *component*`, int` *level*`);`

INTERFACE LEVEL

Solaris DDI specific (Solaris DDI)

PARAMETERS

dip	Pointer to the device `dev_info` structure
component	Number of the component that has changed power level
level	Power level to which the indicated component has changed

DESCRIPTION

The `pm_power_has_changed`(9) function notifies the Power Management framework that the power level of component of *dip* has changed to *level*.

Normally power level changes are initiated by the Power Management framework due to device idleness, or through a request to the framework from the driver via `pm_raise_power`(9F) or `pm_lower_power`(9F), but some devices may change power levels on their own. For the framework to track the power level of the device under these circumstances, the framework must be notified of autonomous power level changes by a call to `pm_power_has_changed()`.

Because of the asynchronous nature of these events, the Power Management framework might have called `power`(9E) between the device's autonomous power level change and the driver calling `pm_power_has_changed()`, or the framework may be in the process of changing the power level when `pm_power_has_changed()` is called. To handle these situations correctly, the driver should verify that the device is indeed at the level or set the device to the level if it doesn't support inquirying of power levels, before calling `pm_power_has_changed()`. In addition, the driver should prevent a `power`(9E) entry point from running in parallel with `pm_power_has_changed()`.

RETURN VALUES

The `pm_power_has_changed()` function returns:

`DDI_SUCCESS`	The power level of component was successfully updated to *level*.
`DDI_FAILURE`	Invalid component *component* or power level *level*

CONTEXT

This function can be called from user or kernel context. This function can also be called from interrupt context, providing that it is not the first Power Management function called by the driver.

EXAMPLES

A hypothetical driver might include this code to handle `pm_power_has_changed`(9):

```
static int
xxusb_intr(struct buf *bp)
{

    ...
```

```
    /*
     * At this point the device has informed us that it has
     * changed power level on its own. Inform this to framework.
     * We need to take care of the case when framework has
     * already called power() entry point and changed power level
     * before we were able to inform framework of this change.
         * Handle this by comparing the informed power level with
     * the actual power level and only doing the call if they
     * are same. In addition, make sure that power() doesn't get
     * run in parallel with this code by holding the mutex.
     */
        ASSERT(mutex_owned(&xsp->lock));
    if (level_informed == *(xsp->level_reg_addr)) {
        if (pm_power_has_changed(xsp->dip, XXUSB_COMPONENT,
            level_informed) != DDI_SUCCESS) {
            mutex_exit( &xsp->lock);
            return(DDI_INTR_UNCLAIMED);
        }
        }

    ....

}


xxdisk_power(dev_info *dip, int comp, int level)
{
    mutex_enter( xsp->lock);

    ...

    ...

}
```

ATTRIBUTES

See `attributes`(5) for a description of the following attributes:

ATTRIBUTE TYPE	ATTRIBUTE VALUE
Stability level	Evolving

SEE ALSO

`power.conf`(4), `pm`(7D), `pm-components`(9), `pm`(9), `power`(9E), `pm_busy_component`(9F), `pm_idle_component`(9F), `pm_raise_power`(9F), `pm_lower_power`(9F)

Writing Device Drivers

NAME

pm_raise_power, pm_lower_power – Raise or lower power of components

SYNOPSIS

```
#include <sys/ddi.h>
#include <sys/sunddi.h>

int pm_raise_power(dev_info_t *dip, int component, int level);

int pm_lower_power(dev_info_t *dip, int component, int level);
```

INTERFACE LEVEL

Solaris DDI specific (Solaris DDI)

PARAMETERS

pm_raise_power

dip	Pointer to the device's `dev_info` structure
component	The number of the *component* for which a power level change is desired
level	The power level to which the indicated *component* will be raised

pm_lower_power

dip	Pointer to the device's `dev_info` structure
component	The number of the *component* for which a power level change is desired
level	The power level to which the indicated *component* will be lowered

DESCRIPTION

The `pm_raise_power`(9F) function requests the Power Management framework to raise the power level of *component* of *dip* to at least *level.*

The state of the device should be examined before each physical access. The `pm_raise_power`(9F) function should be called to set a *component* to the required power level if the operation to be performed requires the *component* to be at a power level higher than its current power level.

When `pm_raise_power`(9F) returns with success, the *component* is guaranteed to be at least at the requested power level. All devices that depend on this will be at their full power level. Since the actual device power level may be higher than requested by the driver, the driver should not make any assumption about the absolute power level on successful return from `pm_raise_power`(9F).

The `pm_raise_power`(9F) function may cause re-entry of the driver `power`(9E) to raise the power level. Deadlock may result if the driver locks are held across the call to `pm_raise_power`(9F).

The `pm_lower_power`(9F) function requests the Power Management framework to lower the power level of *component* of *dip* to at most *level*.

Normally, transitions to lower power levels are initiated by the Power Management framework based on *component* idleness. However, when detaching, the driver should also initiate reduced power levels by setting the power level of all device components to their lowest levels. The `pm_lower_power`(9F) function is intended for this use only, and will return `DDI_FAILURE` if the driver is not detaching at the time of the call.

If automatic Power Management is disabled (see dtpower(1M) and power.conf(4)) , pm_lower_power(9F) returns DDI_SUCCESS without changing the power level of the component. Otherwise, when pm_lower_power(9F) returns with success, the *component* is guaranteed to be at most at the requested power level. Since the actual device power level may be lower than requested by the driver, the driver should not make any assumption about the absolute power level on successful return from pm_lower_power(9F).

The pm_lower_power(9F) may cause re-entry of the driver power(9E) to lower the power level. Deadlock may result if the driver locks are held across the call to pm_raise_power(9F).

RETURN VALUES

The pm_raise_power(9F) function returns:

DDI_SUCCESS — *Component* is now at the requested power level or higher.

DDI_FAILURE — *Component* or *level* is out of range, or the framework was unable to raise the power level of the component to the requested level.

The pm_lower_power(9F) function returns:

DDI_SUCCESS — *Component* is now at the requested power level or lower, or automatic Power Management is disabled.

DDI_FAILURE — *Component* or *level* is out of range, or the framework was unable to lower the power level of the component to the requested level, or the device is not detaching.

EXAMPLES

A hypothetical disk driver might include this code to handle pm_raise_power(9F):

```
static int
xxdisk_strategy(struct buf *bp)
{

...

    /*
     * At this point we have determined that we need to raise the
     * power level of the device. Since we have to drop the
     * mutex, we need to take care of case where framework is
     * lowering power at the same time we are raising power.
     * We resolve this by marking the device busy and failing
     * lower power in power() entry point when device is busy.
     */
        ASSERT(mutex_owned(xsp->lock));
        if (xsp->pm_busycnt < 1) {
                    /*
                    * Component is not already marked busy
                    */
                if (pm_busy_component(xsp->dip,
                       XXDISK_COMPONENT) != DDI_SUCCESS) {
                           bioerror(bp,EIO);
                           biodone(bp);
                           return (0);
```

```
                    }
                    xsp->pm_busycnt++;
        }
        mutex_exit(xsp->lock);
        if (pm_raise_power(xsp->dip,
              XXDISK_COMPONENT, XXPOWER_SPUN_UP) != DDI_SUCCESS) {
                  bioerror(bp,EIO);
                  biodone(bp);
                  return (0);
        }
          mutex_enter(xsp->lock);

          ....

}


xxdisk_power(dev_info *dip, int comp, int level)
{

...

        /*
         * We fail the power() entry point if the device is busy and
         * request is to lower the power level.
         */
      ASSERT(mutex_owned( xsp->lock));
      if (xsp->pm_busycnt >= 1) {
                  (level < xsp->cur_level) {
                        mutex_exit( xsp->lock);
                        return (DDI_FAILURE);
                }
        }

...

}
```

CONTEXT

These functions can be called from user or kernel context.

ATTRIBUTES

See `attributes`(5) for a description of the following attribute:

ATTRIBUTE TYPE	ATTRIBUTE VALUE
Interface stability	Evolving

SEE ALSO

`power.conf`(4), `pm`(7D), `pm`(9), `pm-components`(9), `power`(9E), `pm_busy_component`(9F), `pm_idle_component`(9F)

Writing Device Drivers

NAME

pm_trans_check – Device power cycle advisory check

SYNOPSIS

```
#include <sys/sunddi.h>

int pm_trans_check(struct pm_trans_data *datap, time_t *intervalp);
```

INTERFACE LEVEL

Solaris DDI specific (Solaris DDI)

PARAMETERS

datap Pointer to a `pm_trans_data` structure

intervalp Pointer to time difference when next power cycle will be advised

DESCRIPTION

The `pm_trans_check`(9F) function checks if a power-cycle is currently advised based on data in the `pm_trans_data` structure. This function is provided to prevent damage to devices from excess power cycles; drivers for devices that are sensitive to the number of power cycles should call `pm_trans_check`(9F) from their `power`(9E) function before powering-off a device. If `pm_trans_check`(9F) indicates that the device should not be power cycled, the driver should not attempt to power cycle the device and should fail the call to `power`(9E) entry point.

If `pm_trans_check`(9F) returns that it is not advised to power cycle the device, it attempts to calculate when the next power cycle is advised, based on the supplied parameters. In such case, *intervalp* returns the time difference (in seconds) from the current time to when the next power cycle is advised. If the time for the next power cycle cannot be determined, *intervalp* indicates `0`.

To avoid excessive calls to the `power`(9E) entry point during a period when power cycling is not advised, the driver should mark the corresponding device component busy for the *intervalp* time period (if interval is not 0). Conveniently, the driver can utilize the fact that calls to `pm_busy_component`(9F) are stacked. If power cycling is not advised, the driver can call `pm_busy_component`(9F) and issue a `timeout`(9F) for the *intervalp* time. The `timeout()` handler can issue the corresponding `pm_idle_component`(9F) call.

When the format field of `pm_trans_data` is set to `DC_SCSI_FORMAT`, the caller must provide valid data in `svc_date[]`, `lifemax`, and `ncycles`. Currently, flag must be set to *0*.

```
struct pm_scsi_cycles {
          int lifemax;                      /* lifetime max power cycles */
          int ncycles;                      /* number of cycles so far */
          char svc_date[DC_SCSI_MFR_LEN];   /* service date YYYYWW */
          int flag;                         /* reserved for future */
     };

     struct pm_trans_data {
          int format;                       /* data format */
          union {
               struct pm_scsi_cycles scsi_cycles;
          } un;
     };
```

RETURN VALUES

`1` Power cycle is advised

`0`	Power cycle is not advised
`-1`	Error due to invalid argument.

ATTRIBUTES

See `attributes`(5) for descriptions of the following attributes:

ATTRIBUTE TYPE	ATTRIBUTE VALUE
Interface Stability	Evolving

SEE ALSO

`power.conf`(4), `attributes`(5), `power`(9E)

Writing Device Drivers

Using Power Management

NAME

pollwakeup – inform a process that an event has occurred

SYNOPSIS

```
#include <sys/poll.h>

void pollwakeup(struct pollhead *php, short event);
```

INTERFACE LEVEL

Architecture independent level 1 (DDI/DKI).

PARAMETERS

php Pointer to a `pollhead` structure.

event Event to notify the process about.

DESCRIPTION

`pollwakeup()` wakes a process waiting on the occurrence of an event. It should be called from a driver for each occurrence of an event. The `pollhead` structure will usually be associated with the driver's private data structure associated with the particular minor device where the event has occurred. See `chpoll`(9E) and `poll`(2) for more detail.

CONTEXT

`pollwakeup()` can be called from user or interrupt context.

SEE ALSO

`poll`(2), `chpoll`(9E)

Writing Device Drivers

NOTES

Driver defined locks should not be held across calls to this function.

NAME

proc_signal, proc_ref, proc_unref – send a signal to a process

SYNOPSIS

```
#include <sys/ddi.h>
#include <sys/sunddi.h>
#include <sys/signal.h>
```

```
void *proc_ref(void);
```

```
voidproc_unref(void *pref);
```

```
int proc_signal(void *pref, int sig);
```

INTERFACE LEVEL

Solaris DDI specific (Solaris DDI).

PARAMETERS

pref A handle for the process to be signalled.

sig Signal number to be sent to the process.

DESCRIPTION

This set of routines allows a driver to send a signal to a process. The routine `proc_ref()` is used to retrieve an unambiguous reference to the process for signalling purposes. The return value can be used as a unique handle on the process, even if the process dies. Because system resources are committed to a process reference, `proc_unref()` should be used to remove it as soon as it is no longer needed.`proc_signal()` is used to send signal *sig* to the referenced process. The following set of signals may be sent to a process from a driver:

`SIGHUP` The device has been disconnected.

`SIGINT` The interrupt character has been received.

`SIGQUIT` The quit character has been received.

`SIGPOLL` A pollable event has occurred.

`SIGKILL` Kill the process (cannot be caught or ignored).

`SIGWINCH` Window size change.

`SIGURG` Urgent data are available.

See `signal`(3HEAD) for more details on the meaning of these signals.

If the process has exited at the time the signal was sent, `proc_signal()` returns an error code; the caller should remove the reference on the process by calling `proc_unref()`.

The driver writer must ensure that for each call made to `proc_ref()`, there is exactly one corresponding call to `proc_unref()`.

RETURN VALUES

`proc_ref()` returns the following:

pref An opaque handle used to refer to the current process.

`proc_signal()` returns the following:

`0` The process existed before the signal was sent.

`-1` The process no longer exists; no signal was sent.

CONTEXT

`proc_unref()` and `proc_signal()` can be called from user or interrupt context. `proc_ref()` should only be called from user context.

SEE ALSO

`signal`(3HEAD), `putnextctl1`(9F)

Writing Device Drivers

NAME

ptob – convert size in pages to size in bytes

SYNOPSIS

```
#include <sys/ddi.h>

unsigned long ptob(unsigned long numpages);
```

INTERFACE LEVEL

Architecture independent level 1 (DDI/DKI).

PARAMETERS

numpages Size in number of pages to convert to size in bytes.

DESCRIPTION

This function returns the number of bytes that are contained in the specified number of pages. For example, if the page size is 2048, then `ptob(2)` returns `4096`. `ptob(0)` returns `0`.

RETURN VALUES

The return value is always the number of bytes in the specified number of pages. There are no invalid input values, and no checking will be performed for overflow in the case of a page count whose corresponding byte count cannot be represented by an `unsigned long`. Rather, the higher order bits will be ignored.

CONTEXT

`ptob()` can be called from user or interrupt context.

SEE ALSO

`btop`(9F), `btopr`(9F), `ddi_ptob`(9F)

Writing Device Drivers

NAME

pullupmsg – concatenate bytes in a message

SYNOPSIS

```
#include <sys/stream.h>

int pullupmsg(mblk_t *mp, ssize_t len);
```

INTERFACE LEVEL

Architecture independent level 1 (DDI/DKI).

PARAMETERS

mp Pointer to the message whose blocks are to be concatenated. `mblk_t` is an instance of the `msgb`(9S) structure.

len Number of bytes to concatenate.

DESCRIPTION

`pullupmsg()` tries to combine multiple data blocks into a single block. `pullupmsg()` concatenates and aligns the first *len* data bytes of the message pointed to by *mp*. If *len* equals `-1`, all data are concatenated. If *len* bytes of the same message type cannot be found, `pullupmsg()` fails and returns `0`.

RETURN VALUES

On success, `1` is returned; on failure, `0` is returned.

CONTEXT

`pullupmsg()` can be called from user or interrupt context.

EXAMPLES

EXAMPLE 1 Using `pullupmsg()`

This is a driver write `srv`(9E) (service) routine for a device that does not support scatter/gather DMA. For all `M_DATA` messages, the data will be transferred to the device with DMA. First, try to pull up the message into one message block with the `pullupmsg()` function (line 12). If successful, the transfer can be accomplished in one DMA job. Otherwise, it must be done one message block at a time (lines 19–22). After the data has been transferred to the device, free the message and continue processing messages on the queue.

```
 1 xxxwsrv(q)
 2    queue_t *q;
 3 {
 4        mblk_t *mp;
 5        mblk_t *tmp;
 6        caddr_t dma_addr;
 7     ssize_t dma_len;
 8
 9        while ((mp = getq(q)) != NULL) {
10                switch (mp->b_datap->db_type) {
11             case M_DATA:
12                      if (pullupmsg(mp, -1)) {
13                           dma_addr = vtop(mp->b_rptr);
14                              dma_len = mp->b_wptr - mp->b_rptr;
15                              xxx_do_dma(dma_addr, dma_len);
16                              freemsg(mp);
17                              break;
18                      }
19                      for (tmp = mp; tmp; tmp = tmp->b_cont) {
20                           dma_addr = vtop(tmp->b_rptr);
21                           dma_len = tmp->b_wptr - tmp->b_rptr;
22                           xxx_do_dma(dma_addr, dma_len);
```

EXAMPLE 1 Using `pullupmsg()` *(Continued)*

```
                    }
                       freemsg(mp);
                       break;
          . . .
                 }
        }
 }
```

SEE ALSO

`srv`(9E), `allocb`(9F), `msgpullup`(9F), `msgb`(9S)

Writing Device Drivers

STREAMS Programming Guide

NOTES

`pullupmsg()` is not included in the DKI and will be removed from the system in a future release. Device driver writers are strongly encouraged to use `msgpullup`(9F) instead of `pullupmsg()`.

NAME

put – call a STREAMS put procedure

SYNOPSIS

```
#include <sys/stream.h>
#include <sys/ddi.h>

void put(queue_t *q, mblk_t *mp);
```

INTERFACE LEVEL

Architecture independent level 1 (DDI/DKI).

PARAMETERS

q Pointer to a STREAMS queue.

mp Pointer to message block being passed into queue.

DESCRIPTION

`put()` calls the put procedure (`put`(9E) entry point) for the STREAMS queue specified by *q*, passing it the message block referred to by *mp*. It is typically used by a driver or module to call its own put procedure.

CONTEXT

`put()` can be called from a STREAMS module or driver put or service routine, or from an associated interrupt handler, timeout, bufcall, or esballoc call-back. In the latter cases the calling code must guarantee the validity of the *q* argument.

Since `put()` may cause re-entry of the module (as it is intended to do), mutexes or other locks should not be held across calls to it, due to the risk of single-party deadlock (`put`(9E), `putnext`(9F), `putctl`(9F), `qreply`(9F).) This function is provided as a DDI/DKI conforming replacement for a direct call to a put procedure.

SEE ALSO

`put`(9E), `freezestr`(9F), `putctl`(9F), `putctl1`(9F), `putnext`(9F), `putnextctl`(9F), `putnextctl1`(9F), `qreply`(9F)

Writing Device Drivers

STREAMS Programming Guide

NOTES

The caller cannot have the stream frozen when calling this function. See `freezestr`(9F).

DDI/DKI conforming modules and drivers are no longer permitted to call put procedures directly, but must call through the appropriate STREAMS utility function, for example, `put`(9E), `putnext`(9F), `putctl`(9F), and `qreply`(9F). This function is provided as a DDI/DKI conforming replacement for a direct call to a put procedure.

NAME

putbq – place a message at the head of a queue

SYNOPSIS

```
#include <sys/stream.h>

int putbq(queue_t *q, mblk_t *bp);
```

INTERFACE LEVEL

Architecture independent level 1 (DDI/DKI).

PARAMETERS

q Pointer to the queue.

bp Pointer to the message block.

DESCRIPTION

`putbq()` places a message at the beginning of the appropriate section of the message queue. There are always sections for high priority and ordinary messages. If other priority bands are used, each will have its own section of the queue, in priority band order, after high priority messages and before ordinary messages. `putbq()` can be used for ordinary, priority band, and high priority messages. However, unless precautions are taken, using `putbq()` with a high priority message is likely to lead to an infinite loop of putting the message back on the queue, being rescheduled, pulling it off, and putting it back on.

This function is usually called when `bcanput`(9F) or `canput`(9F) determines that the message cannot be passed on to the next stream component. The flow control parameters are updated to reflect the change in the queue's status. If `QNOENB` is not set, the service routine is enabled.

RETURN VALUES

`putbq()` returns `1` upon success and `0` upon failure.

Note – Upon failure, the caller should call `freemsg`(9F) to free the pointer to the message block.

CONTEXT

`putbq()` can be called from user or interrupt context.

EXAMPLES

See the `bufcall`(9F) function page for an example of `putbq()`.

SEE ALSO

`bcanput`(9F), `bufcall`(9F), `canput`(9F), `getq`(9F), `putq`(9F)

Writing Device Drivers

STREAMS Programming Guide

NAME

putctl1 – send a control message with a one-byte parameter to a queue

SYNOPSIS

```
#include <sys/stream.h>

int putctl1(queue_t *q, int type, int p);
```

INTERFACE LEVEL

Architecture independent level 1 (DDI/DKI).

PARAMETERS

q Queue to which the message is to be sent.

type Type of message.

p One-byte parameter.

DESCRIPTION

`putctl1()`, like `putctl`(9F), tests the *type* argument to make sure a data type has not been specified, and attempts to allocate a message block. The *p* parameter can be used, for example, to specify how long the delay will be when an `M_DELAY` message is being sent. `putctl1()` fails if *type* is `M_DATA`, `M_PROTO`, or `M_PCPROTO`, or if a mesage block cannot be allocated. If successful, `putctl1()` calls the `put`(9E) routine of the queue pointed to by *q* with the newly allocated and initialized message.

RETURN VALUES

On success, `1` is returned. `0` is returned if *type* is a data type, or if a message block cannot be allocated.

CONTEXT

`putctl1()` can be called from user or interrupt context.

EXAMPLES

See the `putctl`(9F) function page for an example of `putctl1()`.

SEE ALSO

`put`(9E), `allocb`(9F), `datamsg`(9F), `putctl`(9F), `putnextctl1`(9F)

Writing Device Drivers

STREAMS Programming Guide

NAME

putctl – send a control message to a queue

SYNOPSIS

```
#include <sys/stream.h>

int putctl(queue_t *q, int type);
```

INTERFACE LEVEL

Architecture independent level 1 (DDI/DKI).

PARAMETERS

q Queue to which the message is to be sent.

type Message type (must be control, not data type).

DESCRIPTION

`putctl()` tests the *type* argument to make sure a data type has not been specified, and then attempts to allocate a message block. `putctl()` fails if *type* is `M_DATA`, `M_PROTO`, or `M_PCPROTO`, or if a message block cannot be allocated. If successful, `putctl()` calls the `put`(9E) routine of the queue pointed to by *q* with the newly allocated and initialized messages.

RETURN VALUES

On success, `1` is returned. If *type* is a data type, or if a message block cannot be allocated, `0` is returned.

CONTEXT

`putctl()` can be called from user or interrupt context.

EXAMPLES

EXAMPLE 1 Using `putctl()`

The `send_ctl()` routine is used to pass control messages downstream. `M_BREAK` messages are handled with `putctl()` (line 11). `putctl1`(9F) (line 16) is used for `M_DELAY` messages, so that *parm* can be used to specify the length of the delay. In either case, if a message block cannot be allocated a variable recording the number of allocation failures is incremented (lines 12, 17). If an invalid message type is detected, `cmn_err`(9F) panics the system (line 21).

```
 1  void
 2  send_ctl(wrq, type, parm)
 3      queue_t *wrq;
 4      uchar_t type;
 5      uchar_t parm;
 6  {
 7          extern int num_alloc_fail;
 8
 9       switch (type) {
10          case M_BREAK:
11             if (!putctl(wrq->q_next, M_BREAK))
12                      num_alloc_fail++;
13                break;
14
15       case M_DELAY:
16             if (!putctl1(wrq->q_next, M_DELAY, parm))
17                      num_alloc_fail++;
18             break;
19
20       default:
21             cmn_err(CE_PANIC, "send_ctl: bad message type passed");
22                break;
```

EXAMPLE 1 Using `putctl()` *(Continued)*

```
        }
}
```

SEE ALSO

`put`(9E), `cmn_err`(9F), `datamsg`(9F), `putctl1`(9F), `putnextctl`(9F)

Writing Device Drivers

STREAMS Programming Guide

NAME

putnext – send a message to the next queue

SYNOPSIS

```
#include <sys/stream.h>
#include <sys/ddi.h>

void putnext(queue_t *q, mblk_t *mp);
```

INTERFACE LEVEL

Architecture independent level 1 (DDI/DKI).

PARAMETERS

q Pointer to the queue from which the message *mp* will be sent.

mp Message to be passed.

DESCRIPTION

`putnext()` is used to pass a message to the `put`(9E) routine of the next queue in the stream.

RETURN VALUES

None.

CONTEXT

`putnext()` can be called from user or interrupt context.

EXAMPLES

See `allocb`(9F) for an example of using `putnext()`.

SEE ALSO

`put`(9E), `allocb`(9F)

Writing Device Drivers

STREAMS Programming Guide

NAME

putnextctl1 – send a control message with a one-byte parameter to a queue

SYNOPSIS

```
#include <sys/stream.h>

int putnextctl1(queue_t *q, int type, int p);
```

INTERFACE LEVEL

Architecture independent level 1 (DDI/DKI).

PARAMETERS

q Queue to which the message is to be sent.

type Type of message.

p One-byte parameter.

DESCRIPTION

`putnextctl1()`, like `putctl1`(9F), tests the *type* argument to make sure a data type has not been specified, and attempts to allocate a message block. The *p* parameter can be used, for example, to specify how long the delay will be when an `M_DELAY` message is being sent. `putnextctl1()` fails if *type* is `M_DATA`, `M_PROTO`, or `M_PCPROTO`, or if a message block cannot be allocated. If successful, `putnextctl1()` calls the `put`(9E) routine of the queue pointed to by *q* with the newly allocated and initialized message.

A call to `putnextctl1(`*q*,*type*, *p*`)` is an atomic equivalent of `putctl1(`*q*`->q_next,` *type*, *p*`)`. The STREAMS framework provides whatever mutual exclusion is necessary to insure that dereferencing *q* through its `q_next` field and then invoking `putctl1`(9F) proceeds without interference from other threads.

`putnextctl1()` should always be used in preference to `putctl1`(9F)

RETURN VALUES

On success, `1` is returned. `0` is returned if *type* is a data type, or if a message block cannot be allocated.

CONTEXT

`putnextctl1()` can be called from user or interrupt context.

EXAMPLES

See the `putnextctl`(9F) function page for an example of `putnextctl1()`.

SEE ALSO

`put`(9E), `allocb`(9F), `datamsg`(9F), `putctl1`(9F), `putnextctl`(9F)

Writing Device Drivers

STREAMS Programming Guide

NAME

putnextctl – send a control message to a queue

SYNOPSIS

```
#include <sys/stream.h>

int putnextctl(queue_t *q, int type);
```

INTERFACE LEVEL

Architecture independent level 1 (DDI/DKI).

PARAMETERS

q Queue to which the message is to be sent.

type Message type (must be control, not data type).

DESCRIPTION

`putnextctl()` tests the *type* argument to make sure a data type has not been specified, and then attempts to allocate a message block. `putnextctl()` fails if *type* is `M_DATA`, `M_PROTO`, or `M_PCPROTO`, or if a message block cannot be allocated. If successful, `putnextctl()` calls the `put`(9E) routine of the queue pointed to by *q* with the newly allocated and initialized messages.

A call to `putnextctl(`*q*`,`*type*`)` is an atomic equivalent of `putctl(`*q*`->q_next,`*type*`)`. The STREAMS framework provides whatever mutual exclusion is necessary to insure that dereferencing *q* through its `q_next` field and then invoking `putctl`(9F) proceeds without interference from other threads.

`putnextctl()` should always be used in preference to `putctl`(9F)

RETURN VALUES

On success, `1` is returned. If *type* is a data type, or if a message block cannot be allocated, `0` is returned.

CONTEXT

`putnextctl()` can be called from user or interrupt context.

EXAMPLES

EXAMPLE 1 Using the `putnextctl()` Function

The `send_ctl` routine is used to pass control messages downstream. `M_BREAK` messages are handled with `putnextctl( )` (line 8). `putnextctl1`(9F) (line 13) is used for `M_DELAY` messages, so that *parm* can be used to specify the length of the delay. In either case, if a message block cannot be allocated a variable recording the number of allocation failures is incremented (lines 9, 14). If an invalid message type is detected, `cmn_err`(9F) panics the system (line 18).

```
 1  void
 2  send_ctl(queue_t *wrq, uchar_t type, uchar_t parm)
 3  {
 4                extern int num_alloc_fail;
 5
 6                switch (type) {
 7             case M_BREAK:
 8                    if (!putnextctl(wrq, M_BREAK))
 9                                num_alloc_fail++;
10                       break;
11
12                case M_DELAY:
13                    if (!putnextctl1(wrq, M_DELAY, parm))
14                                num_alloc_fail++;
15                    break;
```

EXAMPLE 1 Using the `putnextctl()` Function *(Continued)*

```

            default:
                   cmn_err(CE_PANIC, "send_ctl: bad message type passed");
                      break;
               }
 }
```

SEE ALSO

`put`(9E), `cmn_err`(9F), `datamsg`(9F), `putctl`(9F), `putnextctl1`(9F)

Writing Device Drivers

STREAMS Programming Guide

NAME

putq – put a message on a queue

SYNOPSIS

```
#include <sys/stream.h>

int putq(queue_t *q, mblk_t *bp);
```

INTERFACE LEVEL

Architecture independent level 1 (DDI/DKI).

PARAMETERS

q Pointer to the queue to which the message is to be added.

bp Message to be put on the queue.

DESCRIPTION

`putq()` is used to put messages on a driver's queue after the module's put routine has finished processing the message. The message is placed after any other messages of the same priority, and flow control parameters are updated. If `QNOENB` is not set, the service routine is enabled. If no other processing is done, `putq()` can be used as the module's put routine.

RETURN VALUES

`putq()` returns `1` on success and `0` on failure.

Note – Upon failure, the caller should call `freemsg`(9F) to free the pointer to the message block.

CONTEXT

`putq()` can be called from user or interrupt context.

EXAMPLES

See the `datamsg`(9F) function page for an example of `putq()`.

SEE ALSO

`datamsg`(9F), `putbq`(9F), `qenable`(9F), `rmvq`(9F)

Writing Device Drivers

STREAMS Programming Guide

NAME

qbufcall – call a function when a buffer becomes available

SYNOPSIS

```
#include <sys/stream.h>
#include <sys/ddi.h>

bufcall_id_t qbufcall(queue_t *q, size_t size, uint_t pri,
     void*funcvoid *arg, void *arg);
```

INTERFACE LEVEL

Solaris DDI specific (Solaris DDI).

PARAMETERS

q	Pointer to STREAMS queue structure.
size	Number of bytes required for the buffer.
pri	Priority of the `allocb`(9F) allocation request (not used).
func	Function or driver routine to be called when a buffer becomes available.
arg	Argument to the function to be called when a buffer becomes available.

DESCRIPTION

`qbufcall()` serves as a `qtimeout`(9F) call of indeterminate length. When a buffer allocation request fails, `qbufcall()` can be used to schedule the routine *func* to be called with the argument *arg* when a buffer becomes available. *func* may call `allocb()` or it may do something else.

The `qbufcall()` function is tailored to be used with the enhanced STREAMS framework interface, which is based on the concept of perimeters. (See `mt-streams`(9F).) `qbufcall()` schedules the specified function to execute after entering the perimeters associated with the queue passed in as the first parameter to `qbufcall()`. All outstanding bufcalls should be cancelled before the close of a driver or module returns.

`qprocson`(9F) must be called before calling either `qbufcall()` or `qtimeout`(9F).

RETURN VALUES

If successful, `qbufcall()` returns a `qbufcall` ID that can be used in a call to `qunbufcall`(9F) to cancel the request. If the `qbufcall()` scheduling fails, *func* is never called and `0` is returned.

CONTEXT

`qbufcall()` can be called from user or interrupt context.

SEE ALSO

`allocb`(9F), `mt-streams`(9F), `qprocson`(9F), `qtimeout`(9F), `qunbufcall`(9F), `quntimeout`(9F)

Writing Device Drivers

STREAMS Programming Guide

WARNINGS

Even when *func* is called by `qbufcall()`, `allocb`(9F) can fail if another module or driver had allocated the memory before *func* was able to call `allocb`(9F).

NAME

qenable – enable a queue

SYNOPSIS

```
#include <sys/stream.h>
#include <sys/ddi.h>

void qenable(queue_t *q);
```

INTERFACE LEVEL

Architecture independent level 1 (DDI/DKI).

PARAMETERS

q Pointer to the queue to be enabled.

DESCRIPTION

`qenable()` adds the queue pointed to by *q* to the list of queues whose service routines are ready to be called by the STREAMS scheduler.

CONTEXT

`qenable()` can be called from user or interrupt context.

EXAMPLES

See the `dupb`(9F) function page for an example of the `qenable()`.

SEE ALSO

`dupb`(9F)

Writing Device Drivers

STREAMS Programming Guide

NAME

qprocson, qprocsoff – enable, disable put and service routines

SYNOPSIS

```
#include <sys/stream.h>
#include <sys/ddi.h>

void qprocson(queue_t *q);

void qprocsoff(queue_t *q);
```

INTERFACE LEVEL

Architecture independent level 1 (DDI/DKI).

PARAMETERS

q Pointer to the RD side of a STREAMS queue pair.

DESCRIPTION

`qprocson()` enables the put and service routines of the driver or module whose read queue is pointed to by *q*. Threads cannot enter the module instance through the put and service routines while they are disabled.

`qprocson()` must be called by the open routine of a driver or module before returning, and after any initialization necessary for the proper functioning of the put and service routines.

`qprocson()` must be called before calling `qbufcall`(9F), `qtimeout`(9F), `qwait`(9F), or `qwait_sig`(9F),

`qprocsoff()` must be called by the close routine of a driver or module before returning, and before deallocating any resources necessary for the proper functioning of the put and service routines. It also removes the queue's service routines from the service queue, and blocks until any pending service processing completes.

The module or driver instance is guaranteed to be single-threaded before `qprocson()` is called and after `qprocsoff()` is called, except for threads executing asynchronous events such as interrupt handlers and callbacks, which must be handled separately.

CONTEXT

These routines can be called from user or interrupt context.

SEE ALSO

`close`(9E), `open`(9E), `put`(9E), `srv`(9E), `qbufcall`(9F), `qtimeout`(9F), `qwait`(9F), `qwait_sig`(9F)

Writing Device Drivers

STREAMS Programming Guide

NOTES

The caller may not have the STREAM frozen during either of these calls.

NAME

qreply – send a message on a stream in the reverse direction

SYNOPSIS

```
#include <sys/stream.h>

void qreply(queue_t *q, mblk_t *mp);
```

INTERFACE LEVEL

Architecture independent level 1 (DDI/DKI).

PARAMETERS

q Pointer to the queue.

mp Pointer to the message to be sent in the opposite direction.

DESCRIPTION

`qreply()` sends messages in the reverse direction of normal flow. That is, `qreply(q, mp)` is equivalent to `putnext(OTHERQ(q), mp)`.

CONTEXT

`qreply()` can be called from user or interrupt context.

EXAMPLES

EXAMPLE 1 Canonical Flushing Code for STREAMS Drivers.

This example depicts the canonical flushing code for STREAMS drivers. Assume that the driver has service procedures so that there may be messages on its queues. See `srv`(9E). Its write-side put procedure handles `M_FLUSH` messages by first checking the `FLUSHW` bit in the first byte of the message, then the write queue is flushed (line 8) and the `FLUSHW` bit is turned off (line 9). See `put`(9E). If the `FLUSHR` bit is on, then the read queue is flushed (line 12) and the message is sent back up the read side of the stream with the `qreply`(9F) function (line 13). If the `FLUSHR` bit is off, then the message is freed (line 15). See the example for `flushq`(9F) for the canonical flushing code for modules.

```
 1  xxxwput(q, mp)
 2    queue_t *q;
 3    mblk_t *mp;
 4  {
 5        switch(mp->b_datap->db_type) {
 6        case M_FLUSH:
 7           if (*mp->b_rptr & FLUSHW) {
 8                  flushq(q, FLUSHALL);
 9                  *mp->b_rptr &= ~FLUSHW;
10              }
11           if (*mp->b_rptr & FLUSHR) {
12                  flushq(RD(q), FLUSHALL);
13                     qreply(q, mp);
14           } else {
15                     freemsg(mp);
16              }
17           break;
          . . .
18     }
19  }
```

SEE ALSO

`put`(9E), `srv`(9E), `flushq`(9F), `OTHERQ`(9F), `putnext`(9F)

Writing Device Drivers

STREAMS Programming Guide

NAME

qsize – find the number of messages on a queue

SYNOPSIS

```
#include <sys/stream.h>

int qsize(queue_t *q);
```

INTERFACE LEVEL

Architecture independent level 1 (DDI/DKI).

PARAMETERS

q Queue to be evaluated.

DESCRIPTION

`qsize()` evaluates the queue *q* and returns the number of messages it contains.

RETURN VALUES

If there are no message on the queue, `qsize()` returns `0`. Otherwise, it returns the integer representing the number of messages on the queue.

CONTEXT

`qsize()` can be called from user or interrupt context.

SEE ALSO

Writing Device Drivers

STREAMS Programming Guide

NAME

qtimeout – execute a function after a specified length of time

SYNOPSIS

```
#include <sys/stream.h>
#include <sys/ddi.h>

timeout_id_t qtimeout(queue_t *q, void *funcvoid *, void *arg,
     clock_t ticks);
```

INTERFACE LEVEL

Solaris DDI specific (Solaris DDI).

PARAMETERS

q Pointer to STREAMS queue structure.

func Kernel function to invoke when the time increment expires.

arg Argument to the function.

ticks Number of clock ticks to wait before the function is called.

DESCRIPTION

The `qtimeout()` function schedules the specified function *func* to be called after a specified time interval. *func* is called with *arg* as a parameter. Control is immediately returned to the caller. This is useful when an event is known to occur within a specific time frame, or when you want to wait for I/O processes when an interrupt is not available or might cause problems. The exact time interval over which the timeout takes effect cannot be guaranteed, but the value given is a close approximation.

The `qtimeout()` function is tailored to be used with the enhanced STREAMS framework interface which is based on the concept of perimeters. (See `mt-streams`(9F).) `qtimeout()` schedules the specified function to execute after entering the perimeters associated with the queue passed in as the first parameter to `qtimeout()`. All outstanding timeouts should be cancelled before a driver closes or module returns.

`qprocson`(9F) must be called before calling `qtimeout()`.

RETURN VALUES

`qtimeout()` returns an opaque non-zero `timeout` identifier that can be passed to `quntimeout`(9F) to cancel the request. Note: No value is returned from the called function.

CONTEXT

`qtimeout()` can be called from user or interrupt context.

SEE ALSO

`mt-streams`(9F), `qbufcall`(9F), `qprocson`(9F), `qunbufcall`(9F), `quntimeout`(9F)

Writing Device Drivers

STREAMS Programming Guide

NAME

qunbufcall – cancel a pending qbufcall request

SYNOPSIS

```
#include <sys/stream.h>
 #include <sys/ddi.h>


void qunbufcall(queue_t *q, bufcall_id_t id);
```

INTERFACE LEVEL

Solaris DDI specific (Solaris DDI).

PARAMETERS

q Pointer to STREAMS queue_t structure.

id Identifier returned from `qbufcall`(9F)

DESCRIPTION

`qunbufcall()` cancels a pending `qbufcall()` request. The argument *id* is a non-zero identifier of the request to be cancelled. *id* is returned from the `qbufcall()` function used to issue the cancel request.

The `qunbufcall()` function is tailored to be used with the enhanced STREAMS framework interface which is based on the concept of perimeters. (See `mt-streams`(9F).) `qunbufcall()` returns when the bufcall has been cancelled or finished executing. The bufcall will be cancelled even if it is blocked at the perimeters associated with the queue. All outstanding bufcalls should be cancelled before the driver closes or module returns.

CONTEXT

`qunbufcall()` can be called from user or interrupt context.

SEE ALSO

`mt-streams`(9F), `qbufcall`(9F), `qtimeout`(9F), `quntimeout`(9F)

Writing Device Drivers

STREAMS Programming Guide

NAME

quntimeout – cancel previous qtimeout function call

SYNOPSIS

```
#include <sys/stream.h>
#include <sys/ddi.h>

clock_t quntimeout(queue_t *q, timeout_id_t id);
```

INTERFACE LEVEL

Solaris DDI specific (Solaris DDI).

PARAMETERS

q Pointer to a STREAMS queue structure.

id Opaque timeout ID a previous `qtimeout`(9F) call.

DESCRIPTION

`quntimeout()` cancels a pending `qtimeout`(9F) request. The `quntimeout()` function is tailored to be used with the enhanced STREAMS framework interface, which is based on the concept of perimeters. (See `mt-streams`(9F).) `quntimeout()` returns when the timeout has been cancelled or finished executing. The timeout will be cancelled even if it is blocked at the perimeters associated with the queue. `quntimeout()` should be executed for all outstanding timeouts before a driver or module close returns.

RETURN VALUES

`quntimeout()` returns `-1` if the `id` is not found. Otherwise, `quntimeout()` returns a `0` or positive value.

CONTEXT

`quntimeout()` can be called from user or interrupt context.

SEE ALSO

`mt-streams`(9F), `qbufcall`(9F), `qtimeout`(9F), `qunbufcall`(9F)

Writing Device Drivers

STREAMS Programming Guide

NAME

qwait, qwait_sig – STREAMS wait routines

SYNOPSIS

```
#include <sys/stream.h>
#include <sys/ddi.h>

void qwait(queue_t *q);

int qwait_sig(queue_t *q);
```

INTERFACE LEVEL

Solaris DDI specific (Solaris DDI).

PARAMETERS

qp Pointer to the queue that is being opened or closed.

DESCRIPTION

`qwait()` and `qwait_sig()` are used to wait for a message to arrive to the `put`(9E) or `srv`(9E) procedures. `qwait()` and `qwait_sig()` can also be used to wait for `qbufcall`(9F) or `qtimeout`(9F) callback procedures to execute. These routines can be used in the `open`(9E) and `close`(9E) procedures in a STREAMS driver or module. `qwait()` and `qwait_sig()` atomically exit the inner and outer perimeters associated with the queue, and wait for a thread to leave the module's `put`(9E), `srv`(9E), or `qbufcall`(9F) / `qtimeout`(9F) callback procedures. Upon return they re-enter the inner and outer perimeters.

This can be viewed as there being an implicit wakeup when a thread leaves a `put`(9E) or `srv`(9E) procedure or after a `qtimeout`(9F) or `qbufcall`(9F) callback procedure has been run in the same perimeter.

`qprocson`(9F) must be called before calling `qwait()` or `qwait_sig()`.

`qwait()` is not interrupted by a signal, whereas `qwait_sig()` is interrupted by a signal. `qwait_sig()` normally returns non-zero, and returns zero when the waiting was interrupted by a signal.

`qwait()` and `qwait_sig()` are similar to `cv_wait()` and `cv_wait_sig()` except that the mutex is replaced by the inner and outer perimeters and the signalling is implicit when a thread leaves the inner perimeter. See `condvar`(9F).

RETURN VALUES

`0` For `qwait_sig()`, indicates that the condition was not necessarily signaled, and the function returned because a signal was pending.

CONTEXT

These functions can only be called from an `open`(9E) or `close`(9E) routine.

EXAMPLES

EXAMPLE 1 Using `qwait()`

The open routine sends down a `T_INFO_REQ` message and waits for the `T_INFO_ACK`. The arrival of the `T_INFO_ACK` is recorded by resetting a flag in the unit structure (`WAIT_INFO_ACK`). The example assumes that the module is `D_MTQPAIR` or `D_MTPERMOD`.

```
xxopen(qp, . . .)
       queue_t *qp;
{
          struct xxdata *xx;
           /* Allocate xxdata structure */
```

EXAMPLE 1 Using `qwait()` *(Continued)*

```
        qprocson(qp);
        /* Format T_INFO_ACK in mp */
        putnext(qp, mp);
        xx->xx_flags |= WAIT_INFO_ACK;
        while (xx->xx_flags & WAIT_INFO_ACK)
                    qwait(qp);
           return (0);
}
xxrput(qp, mp)
        queue_t *qp;
        mblk_t *mp;
{
        struct xxdata *xx = (struct xxdata *)q->q_ptr;

           ...

           case T_INFO_ACK:
                    if (xx->xx_flags & WAIT_INFO_ACK) {
                          /* Record information from info ack */
                          xx->xx_flags &= ~WAIT_INFO_ACK;
                          freemsg(mp);
                          return;
                    }

           ...
}
```

SEE ALSO

`close`(9E), `open`(9E), `put`(9E), `srv`(9E) `condvar`(9F), `mt-streams`(9F), `qbufcall`(9F), `qprocson`(9F), `qtimeout`(9F)

STREAMS Programming Guide

Writing Device Drivers

NAME

qwriter – asynchronous STREAMS perimeter upgrade

SYNOPSIS

```
#include <sys/stream.h>
#include <sys/ddi.h>

void qwriter(queue_t *qp, mblk_t *mp, void (*func)(), int perimeter);
```

INTERFACE LEVEL

Solaris DDI specific (Solaris DDI).

PARAMETERS

qp	Pointer to the queue.
mp	Pointer to a message that will be passed in to the callback function.
func	A function that will be called when exclusive (writer) access has been acquired at the specified perimeter.
perimeter	Either `PERIM_INNER` or `PERIM_OUTER`.

DESCRIPTION

`qwriter()` is used to upgrade the access at either the inner or the outer perimeter from shared to exclusive and call the specified callback function when the upgrade has succeeded. See `mt-streams`(9F). The callback function is called as:

```
(*func)(queue_t *qp, mblk_t *mp);
```

`qwriter()` will acquire exclusive access immediately if possible, in which case the specified callback function will be executed before `qwriter()` returns. If this is not possible, `qwriter()` will defer the upgrade until later and return before the callback function has been executed. Modules should not assume that the callback function has been executed when `qwriter()` returns. One way to avoid dependencies on the execution of the callback function is to immediately return after calling `qwriter()` and let the callback function finish the processing of the message.

When `qwriter()` defers calling the callback function, the STREAMS framework will prevent other messages from entering the inner perimeter associated with the queue until the upgrade has completed and the callback function has finished executing.

CONTEXT

`qwriter()` can only be called from an `put`(9E) or `srv`(9E) routine, or from a `qwriter()`, `qtimeout`(9F), or `qbufcall`(9F) callback function.

SEE ALSO

`put`(9E), `srv`(9E), `mt-streams`(9F), `qbufcall`(9F), `qtimeout`(9F)

STREAMS Programming Guide

Writing Device Drivers

NAME

RD, rd – get pointer to the read queue

SYNOPSIS

```
#include <sys/stream.h>
#include <sys/ddi.h>

queue_t *RD(queue_t *q);
```

INTERFACE LEVEL

Architecture independent level 1 (DDI/DKI).

PARAMETERS

q Pointer to the `write` queue whose `read` queue is to be returned.

DESCRIPTION

The `RD()` function accepts a `write` queue pointer as an argument and returns a pointer to the `read` queue of the same module.

`CAUTION:` Make sure the argument to this function is a pointer to a `write` queue. `RD()` will not check for queue type, and a system panic could result if it is not the right type.

RETURN VALUES

The pointer to the `read` queue.

CONTEXT

`RD()` can be called from user or interrupt context.

EXAMPLES

EXAMPLE 1 Function page reference

See the `qreply`(9F) function page for an example of `RD()`.

SEE ALSO

`qreply`(9F), `WR`(9F)

Writing Device Drivers

STREAMS Programming Guide

NAME

rmalloc – allocate space from a resource map

SYNOPSIS

```
#include <sys/map.h>
#include <sys/ddi.h>

unsigned long rmalloc(struct map *mp, size_t size);
```

INTERFACE LEVEL

Architecture independent level 1 (DDI/DKI).

PARAMETERS

mp Resource map from where the resource is drawn.

size Number of units of the resource.

DESCRIPTION

`rmalloc()` is used by a driver to allocate space from a previously defined and initialized resource map. The map itself is allocated by calling the function `rmallocmap`(9F). `rmalloc()` is one of five functions used for resource map management. The other functions include:

`rmalloc_wait`(9F)	Allocate space from a resource map, wait if necessary.
`rmfree`(9F)	Return previously allocated space to a map.
`rmallocmap`(9F)	Allocate a resource map and initialize it.
`rmfreemap`(9F)	Deallocate a resource map.

`rmalloc()` allocates space from a resource map in terms of arbitrary units. The system maintains the resource map by size and index, computed in units appropriate for the resource. For example, units may be byte addresses, pages of memory, or blocks. The normal return value is an `unsigned long` set to the value of the index where sufficient free space in the resource was found.

RETURN VALUES

Under normal conditions, `rmalloc()` returns the base index of the allocated space. Otherwise, `rmalloc()` returns a `0` if all resource map entries are already allocated.

CONTEXT

`rmalloc()` can be called from user or interrupt context.

EXAMPLES

EXAMPLE 1 Illustrating the principles of map management

The following example is a simple memory map, but it illustrates the principles of map management. A driver allocates and initializes the map by calling both the `rmallocmap`(9F) and `rmfree`(9F) functions. `rmallocmap`(9F) is called to establish the number of slots or entries in the map, and `rmfree`(9F) to initialize the resource area the map is to manage. The following example is a fragment from a hypothetical `start` routine and illustrates the following procedures:

- Panics the system if the required amount of memory can not be allocated (lines 11–15).
- Uses `rmallocmap`(9F) to configure the total number of entries in the map, and `rmfree`(9F) to initialize the total resource area.

```
1   #define XX_MAPSIZE    12
2   #define XX_BUFSIZE  2560
```

EXAMPLE 1 Illustrating the principles of map management *(Continued)*

```
3   static struct map *xx_mp;         /* Private buffer space map */
    . . .
4   xxstart( )
5        /*
6         *  Allocate private buffer.  If insufficient memory,
7         *  display message and halt system.
8         */
9   {
10      register caddr_t bp;
    . . .
11      if ((bp = kmem_alloc(XX_BUFSIZE, KM_NOSLEEP) == 0)  {
12
13          cmn_err(CE_PANIC, "xxstart: kmem_alloc failed before %d buffer"
14                  "allocation", XX_BUFSIZE);
15      }
16
17      /*
18       * Initialize the resource map with number
19       * of slots in map.
20       */
21      xx_mp = rmallocmap(XX_MAPSIZE);
22
24      /*
25       * Initialize space management map with total
26       * buffer area it is to manage.
27       */
28      rmfree(xx_mp, XX_BUFSIZE, bp);
        . . .
```

EXAMPLE 2 Allocating buffers

The `rmalloc()` function is then used by the driver's `read` or `write` routine to allocate buffers for specific data transfers. The `uiomove`(9F) function is used to move the data between user space and local driver memory. The device then moves data between itself and local driver memory through DMA.

The next example illustrates the following procedures:

- The size of the I/O request is calculated and stored in the *size* variable (line 10).
- Buffers are allocated through the `rmalloc()` function using the *size* value (line 15). If the allocation fails the system will panic.
- The `uiomove`(9F) function is used to move data to the allocated buffer (line 23).
- If the address passed to `uiomove`(9F) is invalid, `rmfree`(9F) is called to release the previously allocated buffer, and an `EFAULT` error is returned.

```
1   #define XX_BUFSIZE  2560
2   #define XX_MAXSIZE  (XX_BUFSIZE / 4)
3
4   static struct map *xx_mp;         /* Private buffer space map */
    ...
5   xxread(dev_t dev, uio_t *uiop, cred_t *credp)
```

EXAMPLE 2 Allocating buffers *(Continued)*

```
{

register caddr_t addr;
register int     size;
    size = min(COUNT, XX_MAXSIZE);  /* Break large I/O request */
                                                /* into small ones */
     /*
      * Get buffer.
      */
    if ((addr = (caddr_t)rmalloc(xx_mp, size)) == 0)
        cmn_err(CE_PANIC, "read: rmalloc failed allocation of size %d",
                size);

     /*
      * Move data to buffer.  If invalid address is found,
      * return buffer to map and return error code.
      */
    if (uiomove(addr, size, UIO_READ, uiop) == -1)  {
        rmfree(xx_mp, size, addr);
        return(EFAULT);
    }
}
```

SEE ALSO

`kmem_alloc`(9F), `rmalloc_wait`(9F), `rmallocmap`(9F), `rmfree`(9F), `rmfreemap`(9F), `uiomove`(9F)

Writing Device Drivers

NAME

rmallocmap, rmallocmap_wait, rmfreemap – allocate and free resource maps

SYNOPSIS

```
#include <sys/ddi.h>
#include <sys/sunddi.h>

struct map *rmallocmap(size_t mapsize);

struct map *rmallocmap_wait(size_t mapsize);

void rmfreemap(struct map *mp);
```

INTERFACE LEVEL

Architecture independent level 1 (DDI/DKI).

PARAMETERS

mapsize Number of entries for the map.

mp A pointer to the map structure to be deallocated.

DESCRIPTION

`rmallocmap()` dynamically allocates a resource map structure. The argument *mapsize* defines the total number of entries in the map. In particular, it is the total number of allocations that can be outstanding at any one time.

`rmallocmap()` initializes the map but does not associate it with the actual resource. In order to associate the map with the actual resource, a call to `rmfree`(9F) is used to make the entirety of the actual resource available for allocation, starting from the first index into the resource. Typically, the call to `rmallocmap()` is followed by a call to `rmfree`(9F), passing the address of the map returned from `rmallocmap()`, the total size of the resource, and the first index into the actual resource.

The resource map allocated by `rmallocmap()` can be used to describe an arbitrary resource in whatever allocation units are appropriate, such as blocks, pages, or data structures. This resource can then be managed by the system by subsequent calls to `rmalloc`(9F), `rmalloc_wait`(9F), and `rmfree`(9F).

`rmallocmap_wait()` is similar to `rmallocmap()`, with the exception that it will wait for space to become available if necessary.

`rmfreemap()` deallocates a resource map structure previously allocated by `rmallocmap()` or `rmallocmap_wait()`. The argument *mp* is a pointer to the map structure to be deallocated.

RETURN VALUES

Upon successful completion, `rmallocmap()` and `rmallocmap_wait()` return a pointer to the newly allocated map structure. Upon failure, `rmallocmap()` returns a `NULL` pointer.

CONTEXT

`rmallocmap()` and `rmfreemap()` can be called from user, kernel, or interrupt context.

`rmallocmap_wait()` can only be called from user or kernel context.

SEE ALSO

`rmalloc`(9F), `rmalloc_wait`(9F), `rmfree`(9F)

Writing Device Drivers

NAME

rmalloc_wait – allocate space from a resource map, wait if necessary

SYNOPSIS

```
#include <sys/map.h>
#include <sys/ddi.h>

unsigned long rmalloc_wait(struct map *mp, size_t size);
```

INTERFACE LEVEL

Architecture independent level 1 (DDI/DKI).

PARAMETERS

mp Pointer to the resource map from which space is to be allocated.

size Number of units of space to allocate.

DESCRIPTION

`rmalloc_wait()` requests an allocation of space from a resource map. `rmalloc_wait()` is similar to the `rmalloc`(9F) function with the exception that it will wait for space to become available if necessary.

RETURN VALUES

`rmalloc_wait()` returns the base of the allocated space.

CONTEXT

This function can be called from user or interrupt context. However, in most cases `rmalloc_wait()` should be called from user context only.

SEE ALSO

`rmalloc`(9F), `rmallocmap`(9F), `rmfree`(9F), `rmfreemap`(9F)

Writing Device Drivers

NAME

rmfree – free space back into a resource map

SYNOPSIS

```
#include <sys/map.h>
#include <sys/ddi.h>

void rmfree(struct map *mp, size_t size, ulong_t index);
```

INTERFACE LEVEL

Architecture independent level 1 (DDI/DKI).

PARAMETERS

mp Pointer to the map structure.

size Number of units being freed.

index Index of the first unit of the allocated resource.

DESCRIPTION

`rmfree()` releases space back into a resource map. It is the opposite of `rmalloc`(9F), which allocates space that is controlled by a resource map structure.

Drivers may define resource maps for resource allocation, in terms of arbitrary units, using the `rmallocmap`(9F) function. The system maintains the resource map structure by size and index, computed in units appropriate for the resource. For example, units may be byte addresses, pages of memory, or blocks. `rmfree()` frees up unallocated space for re-use.

CONTEXT

`rmfree()` can be called from user or interrupt context.

SEE ALSO

`rmalloc`(9F), `rmalloc_wait`(9F), `rmallocmap`(9F), `rmfreemap`(9F)

Writing Device Drivers

NAME

rmvb – remove a message block from a message

SYNOPSIS

```
#include <sys/stream.h>

mblk_t *rmvb(mblk_t *mp, mblk_t *bp);
```

INTERFACE LEVEL

Architecture independent level 1 (DDI/DKI).

PARAMETERS

mp Message from which a block is to be removed. `mblk_t` is an instance of the `msgb`(9S) structure.

bp Message block to be removed.

DESCRIPTION

`rmvb()` removes a message block (*bp*) from a message (*mp*), and returns a pointer to the altered message. The message block is not freed, merely removed from the message. It is the module or driver's responsibility to free the message block.

RETURN VALUES

If successful, a pointer to the message (minus the removed block) is returned. The pointer is `NULL` if *bp* was the only block of the message before `rmvb()` was called. If the designated message block (*bp*) does not exist, `-1` is returned.

CONTEXT

`rmvb()` can be called from user or interrupt context.

EXAMPLES

This routine removes all zero-length `M_DATA` message blocks from the given message. For each message block in the message, save the next message block (line 10). If the current message block is of type `M_DATA` and has no data in its buffer (line 11), then remove it from the message (line 12) and free it (line 13). In either case, continue with the next message block in the message (line 16).

```
 1  void
 2  xxclean(mp)
 3      mblk_t *mp;
 4  {
 5          mblk_t *tmp;
 6          mblk_t *nmp;
 7
 8          tmp = mp;
 9          while (tmp) {
10                  nmp = tmp->b_cont;
11                  if ((tmp->b_datap->db_type == M_DATA) &&
                        (tmp->b_rptr == tmp->b_wptr)) {
12                      (void) rmvb(mp, tmp);
13                      freeb(tmp);
14                  }
15                  tmp = nmp;
16          }
17  }
```

SEE ALSO

`freeb`(9F), `msgb`(9S)

Writing Device Drivers

STREAMS Programming Guide

NAME

rmvq – remove a message from a queue

SYNOPSIS

```
#include <sys/stream.h>

void rmvq(queue_t *q, mblk_t *mp);
```

INTERFACE LEVEL

Architecture independent level 1 (DDI/DKI).

PARAMETERS

q Queue containing the message to be removed.

mp Message to remove.

DESCRIPTION

`rmvq()` removes a message from a queue. A message can be removed from anywhere on a queue. To prevent modules and drivers from having to deal with the internals of message linkage on a queue, either `rmvq()` or `getq`(9F) should be used to remove a message from a queue.

CONTEXT

`rmvq()` can be called from user or interrupt context.

EXAMPLES

This code fragment illustrates how one may flush one type of message from a queue. In this case, only `M_PROTO` `T_DATA_IND` messages are flushed. For each message on the queue, if it is an `M_PROTO` message (line 8) of type `T_DATA_IND` (line 10), save a pointer to the next message (line 11), remove the `T_DATA_IND` message (line 12) and free it (line 13). Continue with the next message in the list (line 19).

```
 1  mblk_t *mp, *nmp;
 2  queue_t *q;
 3  union T_primitives *tp;
 4
 5    freezestr(q);
 6    mp = q->q_first;
 7    while (mp) {
 8        if (mp->b_datap->db_type == M_PROTO) {
 9            tp = (union T_primitives *)mp->b_rptr;
10            if (tp->type == T_DATA_IND) {
11                nmp = mp->b_next;
12                rmvq(q, mp);
13                freemsg(mp);
14                mp = nmp;
15            } else {
16                mp = mp->b_next;
17            }
18        } else {
19            mp = mp->b_next;
20        }
21    }
22    unfreezestr(q);
```

SEE ALSO

`freemsg`(9F), `freezestr`(9F), `getq`(9F), `insq`(9F), `unfreezestr`(9F)

Writing Device Drivers

STREAMS Programming Guide

WARNINGS

Make sure that the message *mp* is linked onto *q* to avoid a possible system panic.

NOTES The stream must be frozen using `freezestr`(9F) before calling `rmvq( )`.

NAME

rwlock, rw_init, rw_destroy, rw_enter, rw_exit, rw_tryenter, rw_downgrade, rw_tryupgrade, rw_read_locked – readers/writer lock functions

SYNOPSIS

```
#include <sys/ksynch.h>

void rw_init(krwlock_t *rwlp, char *name, krw_type_t type, void
    *arg);

void rw_destroy(krwlock_t *rwlp);

void rw_enter(krwlock_t *rwlp, krw_t enter_type);

void rw_exit(krwlock_t *rwlp);

int rw_tryenter(krwlock_t *rwlp, krw_t enter_type);

void rw_downgrade(krwlock_t *rwlp);

int rw_tryupgrade(krwlock_t *rwlp);

int rw_read_locked(krwlock_t *rwlp);
```

INTERFACE LEVEL

Solaris DDI specific (Solaris DDI).

PARAMETERS

rwlp	Pointer to a `krwlock_t` readers/writer lock.
name	Descriptive string. This is obsolete and should be `NULL`. (Non-null strings are legal, but they're a waste of kernel memory.)
type	Type of readers/writer lock.
arg	Type-specific argument for initialization function.
enter_type	Indication of whether the lock is to be acquired non-exclusively or exclusively `RW_READER` or `RW_WRITER`.

DESCRIPTION

A multiple-readers, single-writer lock is represented by the `krwlock_t` data type. This type of lock will allow many threads to have simultaneous read-only access to an object. Only one thread may have write access at any one time. An object which is searched more frequently than it is changed is a good candidate for a readers/writer lock.

Readers/writer locks are slightly more expensive than mutex locks, and the advantage of multiple read access may not occur if the lock will only be held for a short time.

`rw_init()` initializes a readers/writer lock. It is an error to initialize a lock more than once. The *type* argument should be set to `RW_DRIVER`. If the lock is used by the interrupt handler, the type-specific argument, *arg*, should be the `ddi_iblock_cookie` returned from `ddi_get_iblock_cookie`(9F) or `ddi_get_soft_iblock_cookie`(9F). If the lock is not used by any interrupt handler, the argument should be `NULL`.

`rw_destroy()` releases any resources that might have been allocated by `rw_init()`. It should be called before freeing the memory containing the lock.

`rw_enter()` acquires the lock, and blocks if necessary. If *enter_type* is `RW_READER`, the caller blocks if there is a writer or a thread attempting to enter for writing. If *enter_type* is `RW_WRITER`, the caller blocks if any thread holds the lock.

NOTE: It is a programming error for any thread to acquire an rwlock it already holds, even as a reader. Doing so can deadlock the system: if thread R acquires the lock as a reader, then thread W tries to acquire the lock as a writer, W will set write-wanted and block. When R tries to get its second read hold on the lock, it will honor the write-wanted bit and block waiting for W; but W cannot run until R drops the lock. Thus threads R and W deadlock.

`rw_exit()` releases the lock and may wake up one or more threads waiting on the lock.

`rw_tryenter()` attempts to enter the lock, like `rw_enter()`, but never blocks. It returns a non-zero value if the lock was successfully entered, and zero otherwise.

A thread which holds the lock exclusively (entered with `RW_WRITER`), may call `rw_downgrade()` to convert to holding the lock non-exclusively (as if entered with `RW_READER`). One or more waiting readers may be unblocked.

`rw_tryupgrade()` can be called by a thread which holds the lock for reading to attempt to convert to holding it for writing. This upgrade can only succeed if no other thread is holding the lock and no other thread is blocked waiting to acquire the lock for writing.

`rw_read_locked()` returns non-zero if the calling thread holds the lock for read, and zero if the caller holds the lock for write. The caller must hold the lock. The system may panic if `rw_read_locked()` is called for a lock that isn't held by the caller.

RETURN VALUES

`0`	`rw_tryenter()` could not obtain the lock without blocking.
`0`	`rw_tryupgrade()` was unable to perform the upgrade because of other threads holding or waiting to hold the lock.
`0`	`rw_read_locked()` returns `0` if the lock is held by the caller for write.
`non-zero`	from `rw_read_locked()` if the lock is held by the caller for read.
`non-zero`	successful return from `rw_tryenter()` or `rw_tryupgrade()`.

CONTEXT

These functions can be called from user or interrupt context, except for `rw_init()` and `rw_destroy()`, which can be called from user context only.

SEE ALSO

`condvar`(9F), `ddi_add_intr`(9F), `ddi_get_iblock_cookie`(9F), `ddi_get_soft_iblock_cookie`(9F), `mutex`(9F), `semaphore`(9F)

Writing Device Drivers

NOTES

Compiling with `_LOCKTEST` or `_MPSTATS` defined no longer has any effect. To gather lock statistics, see `lockstat`(1M).

NAME

SAMESTR, samestr – test if next queue is in the same stream

SYNOPSIS

```
#include <sys/stream.h>

int SAMESTR(queue_t *q);
```

INTERFACE LEVEL

Architecture independent level 1 (DDI/DKI).

PARAMETERS

q Pointer to the queue.

DESCRIPTION

The `SAMESTR()` function is used to see if the next queue in a stream (if it exists) is the same type as the current queue (that is, both are read queues or both are write queues). This function accounts for the twisted queue connections that occur in a STREAMS pipe and should be used in preference to direct examination of the `q_next` field of `queue`(9S) to see if the stream continues beyond *q*.

RETURN VALUES

`SAMESTR()` returns `1` if the next queue is the same type as the current queue. It returns `0` if the next queue does not exist or if it is not the same type.

CONTEXT

`SAMESTR()` can be called from user or interrupt context.

SEE ALSO

`OTHERQ`(9F)

Writing Device Drivers

STREAMS Programming Guide

NAME

scsi_abort – abort a SCSI command

SYNOPSIS

```
#include <sys/scsi/scsi.h>

int scsi_abort(struct scsi_address *ap, struct scsi_pkt *pkt);
```

INTERFACE LEVEL

Solaris DDI specific (Solaris DDI).

PARAMETERS

ap Pointer to a `scsi_address` structure.

pkt Pointer to a `scsi_pkt`(9S) structure.

DESCRIPTION

`scsi_abort()` terminates a command that has been transported to the host adapter driver. A `NULL` *pkt* causes all outstanding packets to be aborted. On a successful abort, the `pkt_reason` is set to `CMD_ABORTED` and `pkt_statistics` is `OR`'ed with `STAT_ABORTED`.

RETURN VALUES

`scsi_abort()` returns:

`1` on success.

`0` on failure.

CONTEXT

`scsi_abort()` can be called from user or interrupt context.

EXAMPLES

EXAMPLE 1 Terminating a command.

```
if (scsi_abort(&devp->sd_address, pkt) == 0) {
        (void) scsi_reset(&devp->sd_address, RESET_ALL);
}
```

SEE ALLOW

`tran_abort`(9E), `scsi_reset`(9F), `scsi_pkt`(9S)

Writing Device Drivers

NAME

scsi_alloc_consistent_buf – allocate an I/O buffer for SCSI DMA

SYNOPSIS

```
#include <sys/scsi/scsi.h>

struct buf *scsi_alloc_consistent_buf(structscsi_address*ap,
     struct buf *bp, size_t datalen, uint_t bflags, int (*callback,
     caddr_t),caddr_t arg);
```

INTERFACE LEVEL

Solaris DDI specific (Solaris DDI).

PARAMETERS

ap	Pointer to the `scsi_address`(9S) structure.
bp	Pointer to the `buf`(9S) structure.
datalen	Number of bytes for the data buffer.
bflags	Flags setting for the allocated buffer header.
callback	A pointer to a callback function, `NULL_FUNC` or `SLEEP_FUNC`.
arg	The callback function argument.

DESCRIPTION

`scsi_alloc_consistent_buf()` allocates a buffer header and the associated data buffer for direct memory access (DMA) transfer. This buffer is allocated from the `iobp` space, which is considered consistent memory. For more details, see `ddi_dma_mem_alloc`(9F) and `ddi_dma_sync`(9F).

For buffers allocated via `scsi_alloc_consistent_buf()`, and marked with the `PKT_CONSISTENT` flag via `scsi_init_pkt`(9F), the HBA driver must ensure that the data transfer for the command is correctly synchronized before the target driver's command completion callback is performed.

If *bp* is `NULL`, a new buffer header will be allocated using `getrbuf`(9F). In addition, if *datalen* is non-zero, a new buffer will be allocated using `ddi_dma_mem_alloc`(9F).

callback indicates what the allocator routines should do when direct memory access (DMA) resources are not available; the valid values are:

`NULL_FUNC`	Do not wait for resources. Return a `NULL` pointer.
`SLEEP_FUNC`	Wait indefinitely for resources.
Other Values	*callback* points to a function that is called when resources may become available. *callback* must return either `0` (indicating that it attempted to allocate resources but failed to do so), in which case it is put back on a list to be called again later, or `1` indicating either success in allocating resources or indicating that it no longer cares for a retry. The last argument *arg* is supplied to the *callback* function when it is invoked.

RETURN VALUES

`scsi_alloc_consistent_buf()` returns a pointer to a `buf`(9S) structure on success. It returns `NULL` if resources are not available even if *waitfunc* was not `SLEEP_FUNC`.

CONTEXT

If *callback* is `SLEEP_FUNC`, then this routine may be called only from user-level code. Otherwise, it may be called from either user or interrupt level. The *callback* function may not block or call routines that block.

EXAMPLES

EXAMPLE 1 Allocate a request sense packet with consistent DMA resources attached.

```
bp = scsi_alloc_consistent_buf(&devp->sd_address, NULL,
     SENSE_LENGTH, B_READ, SLEEP_FUNC, NULL);
rqpkt = scsi_init_pkt(&devp->sd_address,
     NULL, bp, CDB_GROUP0, 1, 0,
     PKT_CONSISTENT, SLEEP_FUNC, NULL);
```

EXAMPLE 2 Allocate an inquiry packet with consistent DMA resources attached.

```
bp = scsi_alloc_consistent_buf(&devp->sd_address, NULL,
     SUN_INQSIZE, B_READ, canwait, NULL);
if (bp) {
    pkt = scsi_init_pkt(&devp->sd_address, NULL, bp,
        CDB_GROUP0, 1, PP_LEN, PKT_CONSISTENT,
    canwait, NULL);
}
```

SEE ALSO

`ddi_dma_mem_alloc`(9F), `ddi_dma_sync`(9F), `getrbuf`(9F), `scsi_destroy_pkt`(9F), `scsi_init_pkt`(9F), `scsi_free_consistent_buf`(9F), `buf`(9S), `scsi_address`(9S)

Writing Device Drivers

NAME

scsi_cname, scsi_dname, scsi_mname, scsi_rname, scsi_sname – decode a SCSI name

SYNOPSIS

```
#include <sys/scsi/scsi.h>

char *scsi_cname(uchar_t cmd, char **cmdvec);

char *scsi_dname(int dtype);

char *scsi_mname(uchar_t msg);

char *scsi_rname(uchar_t reason);

char *scsi_sname(uchar_t sense_key);
```

INTERFACE LEVEL

Solaris DDI specific (Solaris DDI).

PARAMETERS

cmd	A SCSI command value.
cmdvec	Pointer to an array of command strings.
dtype	Device type.
msg	A message value.
reason	A packet reason value.
sense_key	A SCSI sense key value.

DESCRIPTION

`scsi_cname()` decodes SCSI commands. *cmdvec* is a pointer to an array of strings. The first byte of the string is the command value, and the remainder is the name of the command.

`scsi_dname()` decodes the peripheral device type (for example, direct access or sequential access) in the inquiry data.

`scsi_mname()` decodes SCSI messages.

`scsi_rname()` decodes packet completion reasons.

`scsi_sname()` decodes SCSI sense keys.

RETURN VALUES

These functions return a pointer to a string. If an argument is invalid, they return a string to that effect.

CONTEXT

These functions can be called from user or interrupt context.

EXAMPLES

EXAMPLE 1 Decoding SCSI tape commands.

`scsi_cname()` decodes SCSI tape commands as follows:

```
static char *st_cmds[] = {
            "\000test unit ready",
            "\001rewind",
            "\003request sense",
            "\010read",
            "\012write",
```

EXAMPLE 1 Decoding SCSI tape commands. *(Continued)*

```
            "\020write file mark",
            "\021space",
            "\022inquiry",
            "\025mode select",
            "\031erase tape",
            "\032mode sense",
            "\033load tape",
            NULL
    };
    ..
    cmn_err(CE_CONT, "st: cmd=%s", scsi_cname(cmd, st_cmds));
    ..
```

SEE ALSO *Writing Device Drivers*

NAME

scsi_destroy_pkt – free an allocated SCSI packet and its DMA resource

SYNOPSIS

```
#include <sys/scsi/scsi.h>

void scsi_destroy_pkt(struct scsi_pkt *pktp);
```

INTERFACE LEVEL

Solaris DDI specific (Solaris DDI).

PARAMETERS

pktp Pointer to a `scsi_pkt`(9S) structure.

DESCRIPTION

`scsi_destroy_pkt()` releases all necessary resources, typically at the end of an I/O transfer. The data is synchronized to memory, then the DMA resources are deallocated and *pktp* is freed.

CONTEXT

`scsi_destroy_pkt()` may be called from user or interrupt context.

EXAMPLES

EXAMPLE 1 Releasing resources.

```
scsi_destroy_pkt(un->un_rqs);
```

SEE ALSO

`tran_destroy_pkt`(9E), `scsi_init_pkt`(9F), `scsi_pkt`(9S)

Writing Device Drivers

NAME

scsi_dmaget, scsi_dmafree – SCSI dma utility routines

SYNOPSIS

```
#include <sys/scsi/scsi.h>

struct scsi_pkt *scsi_dmaget(struct scsi_pkt *pkt, opaque_t
     dmatoken, int (*callback)(void));

void scsi_dmafree(struct scsi_pkt *pkt);
```

INTERFACE LEVEL

Solaris DDI specific (Solaris DDI).

PARAMETERS

pkt A pointer to a `scsi_pkt`(9S) structure.

dmatoken Pointer to an implementation dependent object

callback Pointer to a callback function, or `NULL_FUNC` or `SLEEP_FUNC`.

DESCRIPTION

`scsi_dmaget()` allocates DMA resources for an already allocated SCSI packet. *pkt* is a pointer to the previously allocated SCSI packet (see `scsi_pktalloc`(9F)).

dmatoken is a pointer to an implementation dependent object which defines the length, direction, and address of the data transfer associated with this SCSI packet (command). The *dmatoken* must be a pointer to a `buf`(9S) structure. If *dmatoken* is `NULL`, no resources are allocated.

callback indicates what `scsi_dmaget()` should do when resources are not available:

`NULL_FUNC` Do not wait for resources. Return a `NULL` pointer.

`SLEEP_FUNC` Wait indefinitely for resources.

Other Values *callback* points to a function which is called when resources may have become available. *callback* must return either `0` (indicating that it attempted to allocate resouces but failed to do so again), in which case it is put back on a list to be called again later, or `1` indicating either success in allocating resources or indicating that it no longer cares for a retry.

`scsi_dmafree()` frees the DMA resources associated with the SCSI packet. The packet itself remains allocated.

RETURN VALUES

`scsi_dmaget()` returns a pointer to a `scsi_pkt` on success. It returns `NULL` if resources are not available.

CONTEXT

If *callback* is `SLEEP_FUNC`, then this routine may only be called from user-level code. Otherwise, it may be called from either user or interrupt level. The *callback* function may not block or call routines that block.

`scsi_dmafree()` can be called from user or interrupt context.

SEE ALSO

`scsi_pktalloc`(9F), `scsi_pktfree`(9F), `scsi_resalloc`(9F), `scsi_resfree`(9F), `buf`(9S), `scsi_pkt`(9S)

NAME

scsi_errmsg – display a SCSI request sense message

SYNOPSIS

```
#include <sys/scsi/scsi.h>

void scsi_errmsg(struct scsi_device *devp, struct scsi_pkt *pktp,
     char *drv_name, int severity, daddr_t blkno, daddr_t err_blkno,
     struct scsi_key_strings *cmdlist, struct scsi_extended_sense
     *sensep);
```

INTERFACE LEVEL

Solaris DDI specific (Solaris DDI).

PARAMETERS

devp	Pointer to the `scsi_device`(9S) structure.
pktp	Pointer to a `scsi_pkt`(9S) structure.
drv_name	String used by `scsi_log`(9F).
severity	Error severity level, maps to severity strings below.
blkno	Requested block number.
err_blkno	Error block number.
cmdlist	An array of SCSI command description strings.
sensep	A pointer to a `scsi_extended_sense`(9S) structure.

DESCRIPTION

`scsi_errmsg()` interprets the request sense information in the *sensep* pointer and generates a standard message that is displayed using `scsi_log`(9F). The first line of the message is always a `CE_WARN`, with the continuation lines being `CE_CONT`. *sensep* may be `NULL`, in which case no sense key or vendor information is displayed.

The driver should make the determination as to when to call this function based on the severity of the failure and the severity level that the driver wants to report.

The `scsi_device`(9S) structure denoted by *devp* supplies the identification of the device that requested the display. *severity* selects which string is used in the "Error Level:" reporting, according to the following table:

Severity Value:	String:
SCSI_ERR_ALL	All
SCSI_ERR_UNKNOWN	Unknown
SCSI_ERR_INFO	Informational
SCSI_ERR_RECOVERE	Recovered
SCSI_ERR_RETRYABL	Retryable
SCSI_ERR_FATAL	Fatal

blkno is the block number of the original request that generated the error. *err_blkno* is the block number where the error occurred. *cmdlist* is a mapping table for translating the SCSI command code in *pktp* to the actual command string.

The *cmdlist* is described in the structure below:

```
struct scsi_key_strings {
        int key;
        char *message;
};
```

For a basic SCSI disk, the following list is appropriate:

```
static struct scsi_key_strings scsi_cmds[] = {
        0x00, "test unit ready",
        0x01, "rezero/rewind",
        0x03, "request sense",
        0x04, "format",
        0x07, "reassign",
        0x08, "read",
        0x0a, "write",
        0x0b, "seek",
        0x12, "inquiry",
        0x15, "mode select",
        0x16, "reserve",
        0x17, "release",
        0x18, "copy",
        0x1a, "mode sense",
        0x1b, "start/stop",
        0x1e, "door lock",
        0x28, "read(10)",
        0x2a, "write(10)",
        0x2f, "verify",
        0x37, "read defect data",
        0x3b, "write buffer",
        -1, NULL
};
```

CONTEXT

`scsi_errmsg()` may be called from user or interrupt context.

EXAMPLES

EXAMPLE 1 Generating error information.

This entry:

```
   scsi_errmsg(devp, pkt, "sd", SCSI_ERR_INFO, bp->b_blkno,
         err_blkno, sd_cmds, rqsense);
```

Generates:

```
WARNING: /sbus@1,f8000000/esp@0,800000/sd@1,0 (sd1):
    Error for Command: read    Error Level: Informational
    Requested Block: 23936    Error Block: 23936
    Vendor: QUANTUM    Serial Number: 123456
    Sense Key:  Unit Attention
    ASC: 0x29 (reset), ASCQ: 0x0, FRU: 0x0
```

SEE ALSO `cmn_err`(9F), `scsi_log`(9F), `scsi_device`(9S), `scsi_extended_sense`(9S), `scsi_pkt`(9S)

Writing Device Drivers

NAME

scsi_free_consistent_buf – free a previously allocated SCSI DMA I/O buffer

SYNOPSIS

```
#include <sys/scsi/scsi.h>

void scsi_free_consistent_buf(struct buf *bp);
```

INTERFACE LEVEL

Solaris DDI specific (Solaris DDI).

PARAMETERS

bp Pointer to the `buf`(9S) structure.

DESCRIPTION

`scsi_free_consistent_buf()` frees a buffer header and consistent data buffer that was previously allocated using `scsi_alloc_consistent_buf`(9F).

CONTEXT

`scsi_free_consistent_buf()` may be called from either the user or the interrupt levels.

SEE ALSO

`freerbuf`(9F), `scsi_alloc_consistent_buf`(9F), `buf`(9S)

Writing Device Drivers

WARNING

`scsi_free_consistent_buf()` will call `freerbuf`(9F) to free the `buf`(9S) that was allocated before or during the call to `scsi_alloc_consistent_buf`(9F).

If consistent memory is bound to a `scsi_pkt`(9S), the pkt should be destroyed before freeing the consistent memory.

NAME

scsi_hba_attach_setup, scsi_hba_attach, scsi_hba_detach – SCSI HBA attach and detach routines

SYNOPSIS

```
#include <sys/scsi/scsi.h>

int scsi_hba_attach_setup(dev_info_t *dip, ddi_dma_attr_t
    *hba_dma_attr, scsi_hba_tran_t *hba_tran, int hba_flags);

int scsi_hba_attach(dev_info_t *dip, ddi_dma_lim_t *hba_lim,
    scsi_hba_tran_t *hba_tran, int hba_flags, void *hba_options);

int scsi_hba_detach(dev_info_t *dip);
```

INTERFACE LEVEL

Solaris architecture specific (Solaris DDI).

PARAMETERS

dip A pointer to the `dev_info_t` structure, referring to the instance of the HBA device.

hba_lim A pointer to a `ddi_dma_lim`(9S) structure.

hba_tran A pointer to a `scsi_hba_tran`(9S) structure.

hba_flags Flag modifiers. The only defined flag value is `SCSI_HBA_TRAN_CLONE`.

hba_options Optional features provided by the HBA driver for future extensions; must be `NULL`.

hba_dma_attr A pointer to a `ddi_dma_attr`(9S) structure.

DESCRIPTION

`scsi_hba_attach_setup()` is the recommended interface over `scsi_hba_attach()`.

For `scsi_hba_attach_setup()` and `scsi_hba_attach()`:

`scsi_hba_attach()` registers the DMA limits *hba_lim* and the transport vectors *hba_tran* of each instance of the HBA device defined by *dip*. `scsi_hba_attach_setup()` registers the DMA attributes *hba_dma_attr* and the transport vectors *hba_tran* of each instance of the HBA device defined by *dip*. The HBA driver can pass different DMA limits or DMA attributes, and transport vectors for each instance of the device, as necessary, to support any constraints imposed by the HBA itself.

`scsi_hba_attach()` and `scsi_hba_attach_setup()` use the `dev_bus_ops` field in the `dev_ops`(9S) structure. The HBA driver should initialize this field to `NULL` before calling `scsi_hba_attach()` or `scsi_hba_attach_setup()`.

If `SCSI_HBA_TRAN_CLONE` is requested in *hba_flags*, the *hba_tran* structure will be cloned once for each target attached to the HBA. The cloning of the structure will occur before the `tran_tgt_init`(9E) entry point is called to initialize a target. At all subsequent HBA entry points, including `tran_tgt_init`(9E), the `scsi_hba_tran_t` structure passed as an argument or found in a `scsi_address` structure will be the 'cloned' `scsi_hba_tran_t` structure, thus allowing the HBA to

use the `tran_tgt_private` field in the `scsi_hba_tran_t` structure to point to per-target data. The HBA must take care to free only the same `scsi_hba_tran_t` structure it allocated when detaching; all 'cloned' `scsi_hba_tran_t` structures allocated by the system will be freed by the system.

`scsi_hba_attach()` and `scsi_hba_attach_setup()` attach a number of integer-valued properties to *dip*, unless properties of the same name are already attached to the node. An HBA driver should retrieve these configuration parameters via `ddi_prop_get_int`(9F), and respect any settings for features provided the HBA.

`scsi-options`
: Optional SCSI configuration bits

`SCSI_OPTIONS_DR`
: If not set, the HBA should not grant Disconnect privileges to target devices.

`SCSI_OPTIONS_LINK`
: If not set, the HBA should not enable Linked Commands.

`SCSI_OPTIONS_TAG`
: If not set, the HBA should not operate in Command Tagged Queueing mode.

`SCSI_OPTIONS_PARITY`
: If not set, the HBA should not operate in parity mode.

`SCSI_OPTIONS_QAS`
: If not set, the HBA should not make use of the Quick Arbitration Select feature. Consult your Sun hardware documentation to determine whether your machine supports QAS.

`SCSI_OPTIONS_FAST`
: If not set, the HBA should not operate the bus in FAST SCSImode.

`SCSI_OPTIONS_FAST20`
: If not set, the HBA should not operate the bus in FAST20 SCSI mode.

`SCSI_OPTIONS_FAST40`
: If not set, the HBA should not operate the bus in FAST40 SCSI mode.

`SCSI_OPTIONS_FAST80`
: If not set, the HBA should not operate the bus in FAST80 SCSI mode.

`SCSI_OPTIONS_FAST160`
: If not set, the HBA should not operate the bus in FAST160 SCSI mode.

`SCSI_OPTIONS_FAST320`
: If not set, the HBA should not operate the bus in FAST320 SCSI mode.

`SCSI_OPTIONS_WIDE`
: If not set, the HBA should not operate the bus in WIDE SCSI mode.

`SCSI_OPTIONS_SYNC`
: If not set, the HBA should not operate the bus in synchronous transfer mode.

`scsi-reset-delay`
SCSI bus or device reset recovery time, in milliseconds.

`scsi-selection-timeout`
Default SCSI selection phase timeout value, in milliseconds. Please refer to individual HBA man pages for any HBA-specific information

For `scsi_hba_detach()`:

`scsi_hba_detach()` removes the reference to the DMA limits or attributes structure and the transport vector for the given instance of an HBA driver.

RETURN VALUES

`scsi_hba_attach()`, `scsi_hba_attach_setup()`, and `scsi_hba_detach()` return `DDI_SUCCESS` if the function call succeeds, and return `DDI_FAILURE` on failure.

CONTEXT

`scsi_hba_attach()` and `scsi_hba_attach_setup()` should be called from `attach`(9E). `scsi_hba_detach()` should be called from `detach`(9E).

SEE ALSO

`attach`(9E), `detach`(9E), `tran_tgt_init`(9E), `ddi_prop_get_int`(9F), `ddi_dma_attr`(9S), `ddi_dma_lim`(9S), `dev_ops`(9S), `scsi_address`(9S), `scsi_hba_tran`(9S)

Writing Device Drivers

NOTES

It is the HBA driver's responsibility to ensure that no more transport requests will be taken on behalf of any SCSI target device driver after `scsi_hba_detach()` is called.

The `scsi_hba_attach()` function is obsolete and will be discontinued in a future release. This function is replaced by `scsi_hba_attach_setup()`.

NAME

scsi_hba_init, scsi_hba_fini – SCSI Host Bus Adapter system initialization and completion routines

SYNOPSIS

```
#include <sys/scsi/scsi.h>

int scsi_hba_init(struct modlinkage *modlp);

void scsi_hba_fini(struct modlinkage *modlp);
```

INTERFACE LEVEL

Solaris architecture specific (Solaris DDI).

PARAMETERS

modlp Pointer to the Host Bus Adapters module linkage structure.

DESCRIPTION

scsi_hba_init()

`scsi_hba_init()` is the system-provided initialization routine for SCSI HBA drivers. The `scsi_hba_init()` function registers the HBA in the system and allows the driver to accept configuration requests on behalf of SCSI target drivers. The `scsi_hba_init()` routine must be called in the HBA's `_init`(9E) routine before `mod_install`(9F) is called. If `mod_install`(9F) fails, the HBA's `_init`(9E) should call `scsi_hba_fini()` before returning failure.

scsi_hba_fini()

`scsi_hba_fini()` is the system provided completion routine for SCSI HBA drivers. `scsi_hba_fini()` removes all of the system references for the HBA that were created in `scsi_hba_init()`. The `scsi_hba_fini()` routine should be called in the HBA's `_fini`(9E) routine if `mod_remove`(9F) is successful.

RETURN VALUES

`scsi_hba_init()` returns `0` if successful, and a non-zero value otherwise. If `scsi_hba_init()` fails, the HBA's `_init()` entry point should return the value returned by `scsi_hba_init()`.

CONTEXT

`scsi_hba_init()` and `scsi_hba_fini()` should be called from `_init`(9E) or `_fini`(9E), respectively.

SEE ALSO

`_fini`(9E), `_init`(9E), `mod_install`(9F), `mod_remove`(9F), `scsi_pktalloc`(9F), `scsi_pktfree`(9F), `scsi_hba_tran`(9S)

Writing Device Drivers

NOTES

The HBA is responsible for ensuring that no DDI request routines are called on behalf of its SCSI target drivers once `scsi_hba_fini()` is called.

NAME

scsi_hba_lookup_capstr – return index matching capability string

SYNOPSIS

```
#include <sys/scsi/scsi.h>

int scsi_hba_lookup_capstr(char *capstr);
```

INTERFACE LEVEL

Solaris architecture specific (Solaris DDI).

PARAMETERS

capstr Pointer to a string.

DESCRIPTION

`scsi_hba_lookup_capstr()` attempts to match *capstr* against a known set of capability strings, and returns the defined index for the matched capability, if found.

The set of indices and capability strings is:

`SCSI_CAP_DMA_MAX`
  `"dma-max"` or `"dma_max"`

`SCSI_CAP_MSG_OUT`
  `"msg-out"` or `"msg_out"`

`SCSI_CAP_DISCONNECT`
  `"disconnect"`

`SCSI_CAP_SYNCHRONOUS`
  `"synchronous"`

`SCSI_CAP_WIDE_XFER`
  `"wide-xfer"` or `"wide_xfer"`

`SCSI_CAP_PARITY`
  `"parity"`

`SCSI_CAP_INITIATOR_ID`
  `"initiator-id"`

`SCSI_CAP_UNTAGGED_QING`
  `"untagged-qing"`

`SCSI_CAP_TAGGED_QING`
  `"tagged-qing"`

`SCSI_CAP_ARQ`
  `"auto-rqsense"`

`SCSI_CAP_LINKED_CMDS`
  `"linked-cmds"`

`SCSI_CAP_SECTOR_SIZE`
  `"sector-size"`

`SCSI_CAP_TOTAL_SECTORS`
  `"total-sectors"`

`SCSI_CAP_GEOMETRY`
  `"geometry"`

```
SCSI_CAP_RESET_NOTIFICATION
  "reset-notification"

SCSI_CAP_QFULL_RETRIES
  "qfull-retries"

SCSI_CAP_QFULL_RETRY_INTERVAL
  "qfull-retry-interval"
```

RETURN VALUES

`scsi_hba_lookup_capstr()` returns a non-negative index value corresponding to the capability string, or `-1` if the string does not match any known capability.

CONTEXT

`scsi_hba_lookup_capstr()` can be called from user or interrupt context.

SEE ALSO

`tran_getcap`(9E), `tran_setcap`(9E), `scsi_ifgetcap`(9F), `scsi_ifsetcap`(9F), `scsi_reset_notify`(9F)

Writing Device Drivers

NAME

scsi_hba_pkt_alloc, scsi_hba_pkt_free – allocate and free a scsi_pkt structure

SYNOPSIS

```
#include <sys/scsi/scsi.h>

struct scsi_pkt *scsi_hba_pkt_alloc(dev_info_t *dip, struct
     scsi_address *ap, int cmdlen, int statuslen, int tgtlen, int hbalen,
     int (*callback, caddr_t arg, caddr_t arg);

void scsi_hba_pkt_free(struct scsi_address *ap, struct scsi_pkt
     *pkt);
```

INTERFACE LEVEL

Solaris architecture specific (Solaris DDI).

PARAMETERS

dip Pointer to a `dev_info_t` structure, defining the HBA driver instance.

ap Pointer to a `scsi_address`(9S) structure, defining the target instance.

cmdlen Length in bytes to be allocated for the SCSI command descriptor block (CDB).

statuslen Length in bytes to be allocated for the SCSI status completion block (SCB).

tgtlen Length in bytes to be allocated for a private data area for the target driver's exclusive use.

hbalen Length in bytes to be allocated for a private data area for the HBA driver's exclusive use.

callback Indicates what `scsi_hba_pkt_alloc()` should do when resources are not available:

`NULL_FUNC`
: Do not wait for resources. Return a `NULL` pointer.

`SLEEP_FUNC`
: Wait indefinitely for resources.

arg Must be `NULL`.

pkt A pointer to a `scsi_pkt`(9S) structure.

DESCRIPTION

scsi_hba_pkt_alloc() `scsi_hba_pkt_alloc()` allocates space for a `scsi_pkt` structure. HBA drivers should use this interface when allocating a `scsi_pkt` from their `tran_init_pkt`(9E) entry point.

If *callback* is `NULL_FUNC`, `scsi_hba_pkt_alloc()` may not sleep when allocating resources, and callers should be prepared to deal with allocation failures.

`scsi_hba_pkt_alloc()` copies the `scsi_address`(9S) structure pointed to by *ap* to the `pkt_address` field in the `scsi_pkt`(9S).

`scsi_hba_pkt_alloc()` also allocates memory for these `scsi_pkt`(9S) data areas, and sets these fields to point to the allocated memory:

`pkt_ha_private`	HBA private data area.
`pkt_private`	Target driver private data area.
`pkt_scbp`	SCSI status completion block.
`pkt_cdbp`	SCSI command descriptor block.

`scsi_hba_pkt_free()` `scsi_hba_pkt_free()` frees the space allocated for the `scsi_pkt`(9S) structure.

RETURN VALUES

`scsi_hba_pkt_alloc()` returns a pointer to the `scsi_pkt` structure, or `NULL` if no space is available.

CONTEXT

`scsi_hba_pkt_alloc()` can be called from user or interrupt context. Drivers must not allow `scsi_hba_pkt_alloc()` to sleep if called from an interrupt routine.

`scsi_hba_pkt_free()` can be called from user or interrupt context.

SEE ALSO

`tran_init_pkt`(9E), `scsi_address`(9S), `scsi_pkt`(9S)

Writing Device Drivers

NAME

scsi_hba_probe – default SCSI HBA probe function

SYNOPSIS

```
#include <sys/scsi/scsi.h>

int scsi_hba_probe(struct scsi_device *sd, int (*waitfunc)(void));
```

INTERFACE LEVEL

Solaris architecture specific (Solaris DDI).

PARAMETERS

sd Pointer to a `scsi_device`(9S) structure describing the target.

waitfunc `NULL_FUNC` or `SLEEP_FUNC`.

DESCRIPTION

`scsi_hba_probe()` is a function providing the semantics of `scsi_probe`(9F). An HBA driver may call `scsi_hba_probe()` from its `tran_tgt_probe`(9E) entry point, to probe for the existence of a target on the SCSI bus, or the HBA may set `tran_tgt_probe`(9E) to point to `scsi_hba_probe` directly.

RETURN VALUES

See `scsi_probe`(9F) for the return values from `scsi_hba_probe()`.

CONTEXT

`scsi_hba_probe()` should only be called from the HBA's `tran_tgt_probe`(9E) entry point.

SEE ALSO

`tran_tgt_probe`(9E), `scsi_probe`(9F), `scsi_device`(9S)

Writing Device Drivers

NAME

scsi_hba_tran_alloc, scsi_hba_tran_free – allocate and free transport structures

SYNOPSIS

```
#include <sys/scsi/scsi.h>

scsi_hba_tran_t *scsi_hba_tran_alloc(dev_info_t *dip, int flags);

void scsi_hba_tran_free(scsi_hba_tran_t *hba_tran);
```

INTERFACE LEVEL

Solaris architecture specific (Solaris DDI).

PARAMETERS

dip	Pointer to a `dev_info` structure, defining the HBA driver instance.
flag	Flag modifiers. The only possible flag value is `SCSI_HBA_CANSLEEP` (memory allocation may sleep).
hba_tran	Pointer to a `scsi_hba_tran`(9S) structure.

DESCRIPTION

`scsi_hba_tran_alloc()`

`scsi_hba_tran_alloc()` allocates a `scsi_hba_tran`(9S) structure for a HBA driver. The HBA must use this structure to register its transport vectors with the system by using `scsi_hba_attach_setup`(9F).

If the flag `SCSI_HBA_CANSLEEP` is set in *flags*, `scsi_hba_tran_alloc()` may sleep when allocating resources; otherwise it may not sleep, and callers should be prepared to deal with allocation failures.

`scsi_hba_tran_free()`

`scsi_hba_tran_free()` is used to free the `scsi_hba_tran`(9S) structure allocated by `scsi_hba_tran_alloc()`.

RETURN VALUES

`scsi_hba_tran_alloc()` returns a pointer to the allocated transport structure, or NULL if no space is available.

CONTEXT

`scsi_hba_tran_alloc()` can be called from user or interrupt context. Drivers must not allow `scsi_hba_tran_alloc()` to sleep if called from an interrupt routine.

`scsi_hba_tran_free()` can be called from user or interrupt context.

SEE ALSO

`scsi_hba_attach_setup`(9F), `scsi_hba_tran`(9S)

Writing Device Drivers

NAME

scsi_ifgetcap, scsi_ifsetcap – get/set SCSI transport capability

SYNOPSIS

```
#include <sys/scsi/scsi.h>

int scsi_ifgetcap(struct scsi_address *ap, char *cap, int whom);

int scsi_ifsetcap(struct scsi_address *ap, char *cap, int value, int
     whom);
```

INTERFACE LEVEL

Solaris DDI specific (Solaris DDI).

PARAMETERS

ap	Pointer to the `scsi_address` structure.
cap	Pointer to the string capability identifier.
value	Defines the new state of the capability.
whom	Determines if all targets or only the specified target is affected.

DESCRIPTION

The target drivers use `scsi_ifsetcap()` to set the capabilities of the host adapter driver. A *cap* is a name-value pair whose name is a null terminated character string and whose value is an integer. The current value of a capability can be retrieved using `scsi_ifgetcap()`. If *whom* is `0` all targets are affected, else the target specified by the `scsi_address` structure pointed to by *ap* is affected.

A device may support only a subset of the capabilities listed below. It is the responsibility of the driver to make sure that these functions are called with a *cap* supported by the device.

The following capabilities have been defined:

`dma-max`	Maximum `dma` transfer size supported by host adapter.
`msg-out`	Message out capability supported by host adapter: `0` disables, `1` enables.
`disconnect`	Disconnect capability supported by host adapter: `0` disables, `1` enables.
`synchronous`	Synchronous data transfer capability supported by host adapter: `0` disables, `1` enables.
`wide-xfer`	Wide transfer capability supported by host adapter: `0` disables, `1` enables.
`parity`	Parity checking by host adapter: `0` disables, `1` enables.
`initiator-id`	The host's bus address is returned.
`untagged-qing`	The host adapter's capability to support internal queueing of commands without tagged queueing: `0` disables, `1` enables.
`tagged-qing`	The host adapter's capability to support tagged queuing: `0` disables, `1` enables.

`auto-rqsense`	The host adapter's capability to support auto request sense on check conditions: `0` disables, `1` enables.
`sector-size`	The target driver sets this capability to inform the HBA of the granularity, in bytes, of DMA breakup; the HBA's DMA limit structure will be set to reflect this limit (see `ddi_dma_lim_sparc`(9S) or `ddi_dma_lim_x86`(9S)). It should be set to the physical disk sector size. This capability defaults to `512`.
`total-sectors`	The target driver sets this capability to inform the HBA of the total number of sectors on the device, as returned from the SCSI `get capacity` command. This capability must be set before the target driver ''gets'' the `geometry` capability.
`geometry`	This capability returns the HBA geometry of a target disk. The target driver must set the `total-sectors` capability before ''getting'' the `geometry` capability. The geometry is returned as a 32-bit value: the upper 16 bits represent the number of heads per cylinder; the lower 16 bits represent the number of sectors per track. The `geometry` capability cannot be ''set.'' If geometry is not relevant or appropriate for this target disk, because (for example) the HBA BIOS supports Logical Block Addressing for this drive, it is acceptable for `scsi_ifgetcap()` to return `-1`, indicating that the geometry is not defined. This will cause failure of attempts to retreive the "virtual geometry" from the target driver (the `DKIOCG_VIRTGEOM` ioctl will fail). See `dkio`(7I) for more information about `DKIOCG_VIRTGEOM`.
`reset-notification`	The host adapter's capability to support bus reset notification: `0` disables, `1` enables. Refer to `scsi_reset_notify`(9F).
`linked -cmds`	The host adapter's capability to support linked commands: `0` disables, `1` enables.
`qfull-retries`	This capability enables/disables `QUEUE FULL` handling. If `0`, the HBA will not retry a command when a `QUEUE FULL` status is returned. If greater than `0`, then the HBA driver will retry the command at specified number of times at an interval determined by the "`qfull-retry-interval`". The range for `qfull-retries` is `0-255`.

`qfull-retry-interval` This capability sets the retry interval (in ms) for commands that were completed with a `QUEUE FULL` status. The range for `qfull-retry-intervals` is `0-1000` ms.

RETURN VALUES

`scsi_ifsetcap()` returns:

`1` If the capability was successfully set to the new value.

`0` If the capability is not variable.

`–1` If the capability was not defined, or setting the capability to a new value failed.

`scsi_ifgetcap()` returns the current value of a capability, or:

`–1` If the capability was not defined.

CONTEXT

These functions can be called from user or interrupt context.

EXAMPLES

EXAMPLE 1 Using `scsi_ifgetcap()`

```
un->un_arq_enabled =
      ((scsi_ifsetcap(&devp->sd_address, "auto-rqsense", 1, 1) == 1)? 1: 0);
if (scsi_ifsetcap(&devp->sd_address, "tagged-qing", 1, 1) == 1) {
      un->un_dp->options |= SD_QUEUEING;
          un->un_throttle = MAX_THROTTLE;
} else if (scsi_ifgetcap(&devp->sd_address, "untagged-qing", 0) == 1) {
          un->un_dp->options |= SD_QUEUEING;
          un->un_throttle = 3;
} else {
        un->un_dp->options &= ~SD_QUEUEING;
      un->un_throttle = 1;
}
```

SEE ALSO

`scsi_reset_notify`(9F), `ddi_dma_lim_sparc`(9S), `ddi_dma_lim_x86`(9S), `scsi_address`(9S), `scsi_arq_status`(9S)

Writing Device Drivers

NAME

scsi_init_pkt – prepare a complete SCSI packet

SYNOPSIS

```
#include <sys/scsi/scsi.h>

struct scsi_pkt *scsi_init_pkt(struct scsi_address *ap, struct
     scsi_pkt *pktp, struct buf *bp, int cmdlen, int statuslen, int
     privatelen, int flags, int (*callback)(caddr_t) , caddr_t arg);
```

INTERFACE LEVEL

Solaris DDI specific (Solaris DDI).

PARAMETERS

ap	Pointer to a `scsi_address`(9S) structure.
pktp	A pointer to a `scsi_pkt`(9S) structure.
bp	Pointer to a `buf`(9S) structure.
cmdlen	The required length for the SCSI command descriptor block (CDB) in bytes.
statuslen	The required length for the SCSI status completion block (SCB) in bytes.
privatelen	The required length for the *pkt_private* area.
flags	Flags modifier.
callback	A pointer to a callback function, `NULL_FUNC`, or `SLEEP_FUNC`.
arg	The *callback* function argument.

DESCRIPTION

Target drivers use `scsi_init_pkt()` to request the transport layer to allocate and initialize a packet for a SCSI command which possibly includes a data transfer. If *pktp* is `NULL`, a new `scsi_pkt`(9S) is allocated using the HBA driver's packet allocator. The *bp* is a pointer to a `buf`(9S) structure. If *bp* is non-`NULL` and contains a valid byte count, the `buf`(9S) structure is also set up for DMA transfer using the HBA driver DMA resources allocator. When *bp* is allocated by `scsi_alloc_consistent_buf`(9F), the `PKT_CONSISTENT` bit must be set in the *flags* argument to ensure proper operation. If *privatelen* is non-zero then additional space is allocated for the *pkt_private* area of the `scsi_pkt`(9S). On return *pkt_private* points to this additional space. Otherwise *pkt_private* is a pointer that is typically used to store the *bp* during execution of the command. In this case *pkt_private* is `NULL` on return.

The *flags* argument is a set of bit flags. Possible bits include:

`PKT_CONSISTENT`	This must be set if the DMA buffer was allocated using `scsi_alloc_consistent_buf`(9F). In this case, the HBA driver will guarantee that the data transfer is properly synchronized before performing the target driver's command completion callback.
`PKT_DMA_PARTIAL`	This may be set if the driver can accept a partial DMA mapping. If set, `scsi_init_pkt()` will allocate DMA resources with the `DDI_DMA_PARTIAL` bit set in the

dmar_flag element of the ddi_dma_req(9S) structure. The pkt_resid field of the scsi_pkt(9S) structure may be returned with a non-zero value, which indicates the number of bytes for which scsi_init_pkt() was unable to allocate DMA resources. In this case, a subsequent call to scsi_init_pkt() may be made for the same *pktp* and *bp* to adjust the DMA resources to the next portion of the transfer. This sequence should be repeated until the pkt_resid field is returned with a zero value, which indicates that with transport of this final portion the entire original request will have been satisfied.

When calling scsi_init_pkt() to move already-allocated DMA resources, the *cmdlen*, *statuslen* and *privatelen* fields are ignored.

The last argument *arg* is supplied to the *callback* function when it is invoked.

callback indicates what the allocator routines should do when resources are not available:

NULL_FUNC	Do not wait for resources. Return a NULL pointer.
SLEEP_FUNC	Wait indefinitely for resources.
Other Values	*callback* points to a function which is called when resources may have become available. *callback* must return either 0 (indicating that it attempted to allocate resources but again failed to do so), in which case it is put back on a list to be called again later, or 1 indicating either success in allocating resources or indicating that it no longer cares for a retry.

When allocating DMA resources, scsi_init_pkt() returns the scsi_pkt field pkt_resid as the number of residual bytes for which the system was unable to allocate DMA resources. A pkt_resid of 0 means that all necessary DMA resources were allocated.

RETURN VALUES

scsi_init_pkt() returns NULL if the packet or DMA resources could not be allocated. Otherwise, it returns a pointer to an initialized scsi_pkt(9S). If *pktp* was not NULL the return value will be *pktp* on successful initialization of the packet.

CONTEXT

If *callback* is SLEEP_FUNC, then this routine may only be called from user-level code. Otherwise, it may be called from either user or interrupt level. The *callback* function may not block or call routines that block.

EXAMPLES

EXAMPLE 1 Allocating a Packet Without DMA Resources Attached

To allocate a packet without DMA resources attached, use:

EXAMPLE 1 Allocating a Packet Without DMA Resources Attached *(Continued)*

```
pkt = scsi_init_pkt(&devp->sd_address, NULL, NULL, CDB_GROUP1,
        STATUS_LEN, sizeof (struct my_pkt_private *), 0,
        sd_runout, sd_unit);
```

EXAMPLE 2 Allocating a Packet With DMA Resources Attached

To allocate a packet with DMA resources attached use:

```
pkt = scsi_init_pkt(&devp->sd_address, NULL, bp, CDB_GROUP1,
        STATUS_LEN, 0, 0, NULL_FUNC, NULL);
```

EXAMPLE 3 Attaching DMA Resources to a Preallocated Packet

To attach DMA resources to a preallocated packet, use:

```
pkt = scsi_init_pkt(&devp->sd_address, old_pkt, bp, 0,
        0, 0, 0, sd_runout, (caddr_t) sd_unit);
```

EXAMPLE 4 Allocating a Packet with Consistent DMA Resources Attached

Since the packet is already allocated the *cmdlen*, *statuslen* and *privatelen* are `0`. To allocate a packet with consistent DMA resources attached, use:

```
bp = scsi_alloc_consistent_buf(&devp->sd_address, NULL,
           SENSE_LENGTH, B_READ, SLEEP_FUNC, NULL);
    pkt = scsi_init_pkt(&devp->sd_address, NULL, bp, CDB_GROUP0,
        STATUS_LEN, sizeof (struct my_pkt_private *), PKT_CONSISTENT,
        SLEEP_FUNC, NULL);
```

EXAMPLE 5 Allocating a Packet with Partial DMA Resources Attached

To allocate a packet with partial DMA resources attached, use:

```
my_pkt = scsi_init_pkt(&devp->sd_address, NULL, bp, CDB_GROUP0,
          STATUS_LEN, sizeof (struct buf *), PKT_DMA_PARTIAL,
          SLEEP_FUNC, NULL);
```

SEE ALSO

`scsi_alloc_consistent_buf`(9F), `scsi_destroy_pkt`(9F), `scsi_dmaget`(9F), `scsi_pktalloc`(9F), `buf`(9S), `ddi_dma_req`(9S), `scsi_address`(9S), `scsi_pkt`(9S)

Writing Device Drivers

NOTES

If a DMA allocation request fails with `DDI_DMA_NOMAPPING`, the `B_ERROR` flag will be set in *bp*, and the `b_error` field will be set to `EFAULT`.

If a DMA allocation request fails with `DDI_DMA_TOOBIG`, the `B_ERROR` flag will be set in *bp*, and the `b_error` field will be set to `EINVAL`.

NAME

scsi_log – display a SCSI-device-related message

SYNOPSIS

```
#include <sys/scsi/scsi.h>
 #include <sys/cmn_err.h>
```

```
void scsi_log(dev_info_t *dip, char *drv_name, uint_t level, const
     char *fmt, ...);
```

INTERFACE LEVEL

Solaris DDI specific (Solaris DDI).

PARAMETERS

dip	Pointer to the `dev_info` structure.
drv_name	String naming the device.
level	Error level.
fmt	Display format.

DESCRIPTION

`scsi_log()` is a utility function that displays a message via the `cmn_err`(9F) routine. The error levels that can be passed in to this function are `CE_PANIC`, `CE_WARN`, `CE_NOTE`, `CE_CONT`, and `SCSI_DEBUG`. The last level is used to assist in displaying debug messages to the console only. *drv_name* is the short name by which this device is known; example disk driver names are `sd` and `cmdk`. If the *dev_info_t* pointer is `NULL`, then the *drv_name* will be used with no unit or long name.

If the first character in format is an '!' (exclamation point), the message goes only to the system buffer. If the first character in format is a '^`CE_CONT`, the message is always sent to the system buffer, but is only written to the console when the system has been booted in verbose mode. See `kernel`(1M). If neither condition is met, the '?' character has no effect and is simply ignored.

All formatting conversions in use by `cmn_err()` also work with `scsi_log()`.

CONTEXT

`scsi_log()` may be called from user or interrupt context.

EXAMPLES

EXAMPLE 1 Using scsi_log

Entering the following:

```
scsi_log(dev, "Disk Unit ", CE_PANIC, "Bad Value %d\n", foo);
```

generates:

```
PANIC: /eisa/aha@330,0/cmdk@0,0 (Disk Unit 0): Bad Value 5
```

This is followed by a PANIC.

Entering the following:

```
scsi_log(dev, "sd", CE_WARN, "Label Bad\n");
```

generates:

```
WARNING: /sbus@1,f8000000/esp@0,8000000/sd@1,0 (sd1): Label Bad
```

EXAMPLE 1 Using scsi_log *(Continued)*

Entering the following:

```
scsi_log((dev_info_t *) NULL, "Disk Unit ", CE_NOTE, "Disk Ejected\n");
```

generates:

```
Disk Unit: Disk Ejected
```

Entering the following:

```
scsi_log(cmdk_unit, "Disk Unit ", CE_CONT, "Disk Inserted\n");
```

generates:

```
Disk Inserted
```

Entering the following:

```
scsi_log(sd_unit, "sd", SCSI_DEBUG, "We really got here\n");
```

generates the following, to the console only:

```
DEBUG: sd1: We really got here
```

SEE ALSO

`kernel`(1M), `sd`(7D), `cmn_err`(9F), `scsi_errmsg`(9F)

Writing Device Drivers

NAME

scsi_pktalloc, scsi_resalloc, scsi_pktfree, scsi_resfree – SCSI packet utility routines

SYNOPSIS

```
#include <sys/scsi/scsi.h>

struct scsi_pkt *scsi_pktalloc(struct scsi_address*ap, intcmdlen,
     intstatuslen, int(*callback )(void));

struct scsi_pkt *scsi_resalloc(struct scsi_address*ap, intcmdlen,
     intstatuslen, opaque_tdmatoken, int(*callback )(void));

voidscsi_pktfree(struct scsi_pkt*pkt);

voidscsi_resfree(struct scsi_pkt*pkt);
```

INTERFACE LEVEL

Solaris DDI specific (Solaris DDI).

PARAMETERS

ap	Pointer to a `scsi_address` structure.
cmdlen	The required length for the SCSI command descriptor block (CDB) in bytes.
statuslen	The required length for the SCSI status completion block (SCB) in bytes.
dmatoken	Pointer to an implementation-dependent object.
callback	A pointer to a callback function, or `NULL_FUNC` or `SLEEP_FUNC`.
pkt	Pointer to a `scsi_pkt`(9S) structure.

DESCRIPTION

`scsi_pktalloc()` requests the host adapter driver to allocate a command packet. For commands that have a data transfer associated with them, `scsi_resalloc()` should be used.

ap is a pointer to a `scsi_address` structure. Allocator routines use it to determine the associated host adapter.

cmdlen is the required length for the SCSI command descriptor block. This block is allocated such that a kernel virtual address is established in the `pkt_cdbp` field of the allocated `scsi_pkt` structure.

statuslen is the required length for the SCSI status completion block. The address of the allocated block is placed into the `pkt_scbp` field of the `scsi_pkt` structure.

dmatoken is a pointer to an implementation dependent object which defines the length, direction, and address of the data transfer associated with this SCSI packet (command). The *dmatoken* must be a pointer to a `buf`(9S) structure. If *dmatoken* is `NULL`, no DMA resources are required by this SCSI command, so none are allocated. Only one transfer direction is allowed per command. If there is an unexpected data transfer phase (either no data transfer phase expected, or the wrong direction encountered), the command is terminated with the `pkt_reason` set to `CMD_DMA_DERR`. *dmatoken* provides the information to determine if the transfer count is correct.

callback indicates what the allocator routines should do when resources are not available:

`NULL_FUNC`	Do not wait for resources. Return a `NULL` pointer.
`SLEEP_FUNC`	Wait indefinitely for resources.
Other Values	*callback* points to a function which is called when resources may have become available. *callback* must return either `0` (indicating that it attempted to allocate resources but again failed to do so), in which case it is put back on a list to be called again later, or `1` indicating either success in allocating resources or indicating that it no longer cares for a retry.

`scsi_pktfree()` frees the packet.

`scsi_resfree()` free all resources held by the packet and the packet itself.

RETURN VALUES

Both allocation routines return a pointer to a `scsi_pkt` structure on success, or `NULL` on failure.

CONTEXT

If *callback* is `SLEEP_FUNC`, then this routine may only be called from user-level code. Otherwise, it may be called from either user or interrupt level. The *callback* function may not block or call routines that block. Both deallocation routines can be called from user or interrupt context.

SEE ALSO

`scsi_dmafree`(9F), `scsi_dmaget`(9F), `buf`(9S), `scsi_pkt`(9S)

Writing Device Drivers

NAME

scsi_poll – run a polled SCSI command on behalf of a target driver

SYNOPSIS

```
#include <sys/scsi/scsi.h>

int scsi_poll(struct scsi_pkt *pkt);
```

INTERFACE LEVEL

Solaris DDI specific (Solaris DDI).

PARAMETERS

pkt Pointer to the `scsi_pkt`(9S) structure.

DESCRIPTION

`scsi_poll()` requests the host adapter driver to run a polled command. Unlike `scsi_transport`(9F) which runs commands asynchronously, `scsi_poll()` runs commands to completion before returning. If the `pkt_time` member of *pkt* is `0`, the value of `pkt_time` is defaulted to `SCSI_POLL_TIMEOUT` to prevent an indefinite hang of the system.

RETURN VALUES

`scsi_poll()` returns:

`0` command completed successfully.

`-1` command failed.

CONTEXT

`scsi_poll()` can be called from user or interrupt level. This function should not be called when the caller is executing `timeout`(9F) in the context of a thread.

SEE ALSO

`makecom`(9F), `scsi_transport`(9F), `scsi_pkt`(9S)

Writing Device Drivers

WARNINGS

Since `scsi_poll()` runs commands to completion before returning, it may require more time than is desirable when called from interrupt context. Therefore, calling `scsi_poll` from interrupt context is not recommended.

NAME

scsi_probe – utility for probing a scsi device

SYNOPSIS

```
#include <sys/scsi/scsi.h>

int scsi_probe(struct scsi_device *devp, int (*waitfunc);
```

INTERFACE LEVEL

Solaris DDI specific (Solaris DDI).

PARAMETERS

devp Pointer to a `scsi_device`(9S) structure

waitfunc `NULL_FUNC` or `SLEEP_FUNC`

DESCRIPTION

`scsi_probe()` determines whether a `target/lun` is present and sets up the `scsi_device` structure with inquiry data.

`scsi_probe()` uses the SCSI Inquiry command to test if the device exists. It may retry the Inquiry command as appropriate. If `scsi_probe()` is successful, it will allocate space for the `scsi_inquiry` structure and assign the address to the `sd_inq` member of the `scsi_device`(9S) structure. `scsi_probe()` will then fill in this `scsi_inquiry`(9S) structure and return `SCSIPROBE_EXISTS`. If `scsi_probe()` is unsuccessful, it returns `SCSIPROBE_NOMEM` in spite of callback set to `SLEEP_FUNC`.

`scsi_unprobe`(9F) is used to undo the effect of `scsi_probe()`.

If the target is a non-CCS device, `SCSIPROBE_NONCCS` will be returned.

waitfunc indicates what the allocator routines should do when resources are not available; the valid values are:

`NULL_FUNC` Do not wait for resources. Return `SCSIPROBE_NOMEM` or `SCSIPROBE_FAILURE`

`SLEEP_FUNC` Wait indefinitely for resources.

RETURN VALUES

`scsi_probe()` returns:

`SCSIPROBE_BUSY`	Device exists but is currently busy.
`SCSIPROBE_EXISTS`	Device exists and inquiry data is valid.
`SCSIPROBE_FAILURE`	Polled command failure.
`SCSIPROBE_NOMEM`	No space available for structures.
`SCSIPROBE_NOMEM_CB`	No space available for structures but callback request has been queued.
`SCSIPROBE_NONCCS`	Device exists but inquiry data is not valid.
`SCSIPROBE_NORESP`	Device does not respond to an INQUIRY.

CONTEXT

`scsi_probe()` is normally called from the target driver's `probe`(9E) or `attach`(9E) routine. If *waitfunc* is `SLEEP_FUNC`, then this routine may only be called from user-level code. Otherwise, it may be called from either user or interrupt level.

EXAMPLES

EXAMPLE 1 Using `scsi_probe()`

```
switch (scsi_probe(devp, NULL_FUNC)) {
default:
case SCSIPROBE_NORESP:
case SCSIPROBE_NONCCS:
case SCSIPROBE_NOMEM:
case SCSIPROBE_FAILURE:
case SCSIPROBE_BUSY:
        break;
case SCSIPROBE_EXISTS:
        switch (devp->sd_inq->inq_dtype) {
        case DTYPE_DIRECT:
                rval = DDI_PROBE_SUCCESS;
                break;
        case DTYPE_RODIRECT:
                rval = DDI_PROBE_SUCCESS;
                break;
        case DTYPE_NOTPRESENT:
        default:
                break;
        }
}
scsi_unprobe(devp);
```

SEE ALSO

`attach`(9E), `probe`(9E), `scsi_slave`(9F), `scsi_unprobe`(9F), `scsi_unslave`(9F), `scsi_device`(9S), `scsi_inquiry`(9S)

ANSI Small Computer System Interface-2 (SCSI-2)

Writing Device Drivers

NOTES

A *waitfunc* function other than `NULL_FUNC` or `SLEEP_FUNC` is not supported and may have unexpected results.

NAME

scsi_reset – reset a SCSI bus or target

SYNOPSIS

```
#include <sys/scsi/scsi.h>

int scsi_reset(struct scsi_address *ap, int level);
```

INTERFACE LEVEL

Solaris DDI specific (Solaris DDI).

PARAMETERS

ap Pointer to the `scsi_address` structure.

level The level of reset required.

DESCRIPTION

`scsi_reset()` asks the host adapter driver to reset the SCSI bus or a SCSI target as specified by *level*. If *level* equals `RESET_ALL`, the SCSI bus is reset. If it equals `RESET_TARGET`, *ap* is used to determine the target to be reset.

On a successful reset, the `pkt_reason` is set to `CMD_RESET` and `pkt_statistics` is OR'd with `STAT_BUS_RESET` or `STAT_DEV_RESET`.

RETURN VALUES

`scsi_reset()` returns:

`1` Upon success.

`0` Upon failure.

CONTEXT

`scsi_reset()` can be called from user or interrupt context.

SEE ALSO

`tran_reset`(9E), `tran_reset_notify`(9E), `scsi_abort`(9F)

Writing Device Drivers

NAME

scsi_reset_notify – notify target driver of bus resets

SYNOPSIS

```
#include <sys/scsi/scsi.h>

void scsi_reset_notify(struct scsi_address *ap, int flag, void
     (*callback)(caddr_t), caddr_t arg);
```

INTERFACE LEVEL

Solaris DDI specific (Solaris DDI).

PARAMETERS

ap	Pointer to the `scsi_address` structure.
flag	A flag indicating registration or cancellation of the notification request.
callback	A pointer to the target driver's reset notification function.
arg	The callback function argument.

DESCRIPTION

`scsi_reset_notify()` is used by a target driver when it needs to be notified of a bus reset. The bus reset could be issued by the transport layer (e.g. the host bus adapter (HBA) driver or controller) or by another initiator.

The argument *flag* is used to register or cancel the notification. The supported values for *flag* are as follows:

`SCSI_RESET_NOTIFY`	Register *callback* as the reset notification function for the target driver.
`SCSI_RESET_CANCEL`	Cancel the reset notification request.

Target drivers can find out whether the HBA driver and controller support reset notification by checking the `reset-notification` capability using the `scsi_ifgetcap`(9F) function.

RETURN VALUES

If *flag* is `SCSI_RESET_NOTIFY`, `scsi_reset_notify()` returns:

`DDI_SUCCESS`	The notification request has been accepted.
`DDI_FAILURE`	The transport layer does not support reset notification or could not accept this request.

If *flag* is `SCSI_RESET_CANCEL`, `scsi_reset_notify()` returns:

`DDI_SUCCESS`	The notification request has been canceled.
`DDI_FAILURE`	No notification request was registered.

CONTEXT

`scsi_reset_notify()` can be called from user or interrupt context.

SEE ALSO

`scsi_address`(9S), `scsi_ifgetcap`(9F)

Writing Device Drivers

NAME

scsi_setup_cdb – setup SCSI command descriptor block (CDB)

SYNOPSIS

```
int scsi_setup_cdb(union scsi_cdb *cdbp, uchar_t cmd, uint_t addr,
     uint_t cnt, uint_t othr_cdb_data);
```

INTERFACE LEVEL

Solaris DDI specific (Solaris DDI).

PARAMETERS

cdbp Pointer to command descriptor block.

cmd The first byte of the SCSI group 0, 1, 2, 4, or 5 CDB.

addr Pointer to the location of the data.

cnt Data transfer length in units defined by the SCSI device type. For sequential devices *cnt* is the number of bytes. For block devices, *cnt* is the number of blocks.

othr_cdb_data Additional CDB data.

DESCRIPTION

`scsi_setup_cdb()` function initializes a group 0, 1, 2, 4, or 5 type of command descriptor block pointed to by *cdbp* using *cmd*, *addr*, *cnt*, *othr_cdb_data*.

addr should be set to 0 for commands having no addressing information (for example, group 0 READ command for sequential access devices). *othr_cdb_data* should be additional CDB data for Group 4 commands; otherwise, it should be set to 0.

`scsi_setup_cdb()` function does not set the LUN bits in CDB[1] as the `makecom`(9F) functions do. Also, the fixed bit for sequential access device commands is not set.

RETURN VALUES

`scsi_setup_cdb()` returns:

`1` Upon success.

`0` Upon failure.

CONTEXT

These functions can be called from a user or interrupt context.

SEE ALSO

`makecom`(9F), `scsi_pkt`(9S)

Writing Device Drivers

American National Standard Small Computer System Interface-2 (SCSI-2)

American National Standard SCSI-3 Primary Commands (SPC)

NAME

scsi_slave – utility for SCSI target drivers to establish the presence of a target

SYNOPSIS

```
#include <sys/scsi/scsi.h>

int scsi_slave(struct scsi_device *devp, int (*callback)(void));
```

INTERFACE LEVEL

Solaris DDI specific (Solaris DDI).

PARAMETERS

devp Pointer to a `scsi_device`(9S) structure.

callback Pointer to a callback function, `NULL_FUNC` or `SLEEP_FUNC`.

DESCRIPTION

`scsi_slave()` checks for the presence of a SCSI device. Target drivers may use this function in their `probe`(9E) routines. `scsi_slave()` determines if the device is present by using a Test Unit Ready command followed by an Inquiry command. If `scsi_slave()` is successful, it will fill in the `scsi_inquiry` structure, which is the `sd_inq` member of the `scsi_device`(9S) structure, and return `SCSI_PROBE_EXISTS`. This information can be used to determine if the target driver has probed the correct SCSI device type. *callback* indicates what the allocator routines should do when DMA resources are not available:

`NULL_FUNC` Do not wait for resources. Return a `NULL` pointer.

`SLEEP_FUNC` Wait indefinitely for resources.

Other Values *callback* points to a function which is called when resources may have become available. *callback* `must` return either `0` (indicating that it attempted to allocate resources but again failed to do so), in which case it is put back on a list to be called again later, or `1` indicating either success in allocating resources or indicating that it no longer cares for a retry.

RETURN VALUES

`scsi_slave()` returns:

`SCSIPROBE_NOMEM`	No space available for structures.
`SCSIPROBE_EXISTS`	Device exists and inquiry data is valid.
`SCSIPROBE_NONCCS`	Device exists but inquiry data is not valid.
`SCSIPROBE_FAILURE`	Polled command failure.
`SCSIPROBE_NORESP`	No response to `TEST UNIT READY`.

CONTEXT

`scsi_slave()` is normally called from the target driver's `probe`(9E) or `attach`(9E) routine. If *callback* is `SLEEP_FUNC`, then this routine may only be called from user-level code. Otherwise, it may be called from either user or interrupt level. The *callback* function may not block or call routines that block.

SEE ALSO

`attach`(9E), `probe`(9E), `ddi_iopb_alloc`(9F), `makecom`(9F), `scsi_dmaget`(9F), `scsi_ifgetcap`(9F), `scsi_pktalloc`(9F), `scsi_poll`(9F), `scsi_probe`(9F), `scsi_device`(9S)

ANSI Small Computer System Interface-2 (SCSI-2)

NAME

scsi_sync_pkt – synchronize CPU and I/O views of memory

SYNOPSIS

```
#include <sys/scsi/scsi.h>

void scsi_sync_pkt(struct scsi_pkt *pktp);
```

INTERFACE LEVEL

Solaris DDI specific (Solaris DDI).

PARAMETERS

pktp Pointer to a `scsi_pkt`(9S) structure.

DESCRIPTION

`scsi_sync_pkt()` is used to selectively synchronize a CPU's or device's view of the data associated with the SCSI packet that has been mapped for I/O. This may involve operations such as flushes of CPU or I/O caches, as well as other more complex operations such as stalling until hardware write buffers have drained.

This function need only be called under certain circumstances. When a SCSI packet is mapped for I/O using `scsi_init_pkt`(9F) and destroyed using `scsi_destroy_pkt`(9F), then an implicit `scsi_sync_pkt()` will be performed. However, if the memory object has been modified by either the device or a CPU after the mapping by `scsi_init_pkt`(9F), then a call to `scsi_sync_pkt()` is required.

If the same scsi_pkt is reused for a data transfer from memory to a device, then `scsi_sync_pkt()` must be called before calling `scsi_transport`(9F). If the same packet is reused for a data transfer from a device to memory `scsi_sync_pkt()` must be called after the completion of the packet but before accessing the data in memory.

CONTEXT

`scsi_sync_pkt()` may be called from user or interrupt context.

SEE ALSO

`tran_sync_pkt`(9E), `ddi_dma_sync`(9F), `scsi_destroy_pkt`(9F), `scsi_init_pkt`(9F), `scsi_transport`(9F), `scsi_pkt`(9S)

Writing Device Drivers

NAME

scsi_transport – request by a SCSI target driver to start a command

SYNOPSIS

```
#include <sys/scsi/scsi.h>

int scsi_transport(struct scsi_pkt *pkt);
```

INTERFACE LEVEL

Solaris DDI specific (Solaris DDI).

PARAMETERS

pkt Pointer to a `scsi_pkt`(9S) structure.

DESCRIPTION

Target drivers use `scsi_transport()` to request the host adapter driver to transport a command to the SCSI target device specified by *pkt*. The target driver must obtain resources for the packet using `scsi_init_pkt`(9F) prior to calling this function. The packet may be initialized using one of the `makecom`(9F) functions. `scsi_transport()` does not wait for the SCSI command to complete. See `scsi_poll`(9F) for a description of polled SCSI commands. Upon completion of the SCSI command the host adapter calls the completion routine provided by the target driver in the `pkt_comp` member of the `scsi_pkt` pointed to by *pkt*.

RETURN VALUES

`scsi_transport()` returns:

`TRAN_ACCEPT`	The packet was accepted by the transport layer.
`TRAN_BUSY`	The packet could not be accepted because there was already a packet in progress for this target/lun, the host adapter queue was full, or the target device queue was full.
`TRAN_BADPKT`	The DMA count in the packet exceeded the DMA engine's maximum DMA size.
`TRAN_FATAL_ERROR`	A fatal error has occurred in the transport layer.

CONTEXT

`scsi_transport()` can be called from user or interrupt context.

EXAMPLES

EXAMPLE 1 Using `scsi_transport()`

```
if ((status = scsi_transport(rqpkt)) != TRAN_ACCEPT) {
      scsi_log(devp, sd_label, CE_WARN,
          "transport of request sense pkt fails (0x%x)\n", status);
}
```

SEE ALSO

`tran_start`(9E), `makecom`(9F), `scsi_init_pkt`(9F), `scsi_pktalloc`(9F), `scsi_poll`(9F), `scsi_pkt`(9S)

Writing Device Drivers

NAME

scsi_unprobe, scsi_unslave – free resources allocated during initial probing

SYNOPSIS

```
#include <sys/scsi/scsi.h>

void scsi_unslave(struct scsi_device *devp);

void scsi_unprobe(struct scsi_device *devp);
```

INTERFACE LEVEL

Solaris DDI specific (Solaris DDI).

PARAMETERS

devp Pointer to a `scsi_device`(9S) structure.

DESCRIPTION

`scsi_unprobe()` and `scsi_unslave()` are used to free any resources that were allocated on the driver's behalf during `scsi_slave`(9F) and `scsi_probe`(9F) activity.

CONTEXT

`scsi_unprobe()` and `scsi_unslave()` may be called from either the user or the interrupt levels.

SEE ALSO

`scsi_probe`(9F), `scsi_slave`(9F), `scsi_device`(9S)

Writing Device Drivers

NAME

scsi_vu_errmsg – display a SCSI request sense message

SYNOPSIS

```
#include <sys/scsi/scsi.h>

void scsi_vu_errmsg(struct scsi_pkt *pktp, char *drv_name, int
     severity, int err_blkno, struct scsi_key_strings *cmdlist,
     struct scsi_extended_sense *sensep, struct
     scsi_asq_key_strings *asc_list, char **decode_frustruct
     scsi_device*, char *, int, char);
```

INTERFACE LEVEL

Solaris DDI specific (Solaris DDI).

PARAMETERS

The following parameters are supported:

devp	Pointer to the `scsi_device`(9S) structure.
pktp	Pointer to a `scsi_pkt`(9S) structure.
drv_name	String used by `scsi_log`(9F).
severity	Error severity level, maps to severity strings below.
blkno	Requested block number.
err_blkno	Error block number.
cmdlist	An array of SCSI command description strings.
sensep	A pointer to a `scsi_extended_sense`(9S) structure.
asc_list	A pointer to a array of asc and ascq message list.The list must be terminated with `-1` asc value.
decode_fru	This is a function pointer that will be called after the entire sense information has been decoded. The parameters will be the scsi_device structure to identify the device. Second argument will be a pointer to a buffer of length specified by third argument. The fourth argument will be the FRU byte. decode_fru may be `NULL` if no special decoding is required. *decode_fru* is expected to return pointer to a char string if decoding possible and NULL if no decoding is possible.

DESCRIPTION

This function is very similar to `scsi_errmsg`(9F) but allows decoding of vendor-unique ASC/ASCQ and FRU information.

`scsi_vu_errmsg()` interprets the request sense information in the *sensep* pointer and generates a standard message that is displayed using `scsi_log`(9F). It first searches the list array for a matching vendor unique code if supplied. If it does not find one in the list then the standard list is searched. The first line of the message is always a `CE_WARN`, with the continuation lines being `CE_CONT`. *sensep* may be `NULL`, in which case no sense key or vendor information is displayed.

The driver should make the determination as to when to call this function based on the severity of the failure and the severity level that the driver wants to report.

The `scsi_device`(9S) structure denoted by *devp* supplies the identification of the device that requested the display. *severity* selects which string is used in the "Error Level:" reporting, according to the table below:

```
Severity Value:      String:
SCSI_ERR_ALL         All
SCSI_ERR_UNKNOWN     Unknown
SCSI_ERR_INFO        Information
SCSI_ERR_RECOVERED   Recovered
SCSI_ERR_RETRYABLE   Retryable
SCSI_ERR_FATAL       Fatal
```

blkno is the block number of the original request that generated the error. *err_blkno* is the block number where the error occurred. *cmdlist* is a mapping table for translating the SCSI command code in pktp to the actual command string.

The *cmdlist* is described in the structure below:

```
struct scsi_key_strings {
    int key;
    char *message;
};
```

For a basic SCSI disk, the following list is appropriate:

```
static struct scsi_key_strings scsi_cmds[] = {
        0x00, "test unit ready",
        0x01, "rezero/rewind",
        0x03, "request sense",
        0x04, "format",
        0x07, "reassign",
        0x08, "read",
        0x0a, "write",
        0x0b, "seek",
        0x12, "inquiry",
        0x15, "mode select",
        0x16, "reserve",
        0x17, "release",
        0x18, "copy",
        0x1a, "mode sense",
        0x1b, "start/stop",
        0x1e, "door lock",
        0x28, "read(10)",
        0x2a, "write(10)",
        0x2f, "verify",
        0x37, "read defect data",
        0x3b, "write buffer",
        -1, NULL
};
```

CONTEXT

`scsi_vu_errmsg()` may be called from user or interrupt context.

EXAMPLES

EXAMPLE 1 Using `scsi_vu_errmsg()`

```
struct scsi_asq_key_strings cd_slist[] = {
        0x81, 0, "Logical Unit is inaccessable",
        -1, 0, NULL,
};


scsi_vu_errmsg(devp, pkt, "sd",
               SCSI_ERR_INFO, bp->b_blkno, err_blkno,
               sd_cmds, rqsense, cd_list,
               my_decode_fru);
```

This generates the following console warning:

```
WARNING: /sbus@1,f8000000/esp@0,800000/sd@1,0 (sd1):
         Error for Command: read        Error Level: Informational
         Requested Block: 23936         Error Block: 23936
         Vendor: XYZ                Serial Number: 123456
         Sense Key:  Unit Attention
         ASC: 0x81 (Logical Unit is inaccessable), ASCQ: 0x0
         FRU: 0x11 (replace LUN 1, located in slot 1)
```

SEE ALSO

`cmn_err`(9F), `scsi_errmsg`(9F), `scsi_log`(9F), `scsi_errmsg`(9F), `scsi_asc_key_strings`(9S), `scsi_device`(9S), `scsi_extended_sense`(9S), `scsi_pkt`(9S)

Writing Device Drivers

STREAMS Programming Guide

NAME

semaphore, sema_init, sema_destroy, sema_p, sema_p_sig, sema_v, sema_tryp – semaphore functions

SYNOPSIS

```
#include <sys/ksynch.h>

void sema_init(ksema_t *sp, uint_t val, char *name, ksema_type_t
     type, void *arg);

void sema_destroy(ksema_t *sp);

void sema_p(ksema_t *sp);

void sema_v(ksema_t *sp);

int sema_p_sig(ksema_t *sp);

int sema_tryp(ksema_t *sp);
```

INTERFACE LEVEL

Solaris DDI specific (Solaris DDI).

PARAMETERS

sp	A pointer to a semaphore, type `ksema_t`.
val	Initial value for semaphore.
name	Descriptive string. This is obsolete and should be `NULL`. (Non-`NULL` strings are legal, but they are a waste of kernel memory.)
type	Variant type of the semaphore. Currently, only `SEMA_DRIVER` is supported.
arg	Type-specific argument; should be `NULL`.

DESCRIPTION

These functions implement counting semaphores as described by Dijkstra. A semaphore has a value which is atomically decremented by `sema_p()` and atomically incremented by `sema_v()`. The value must always be greater than or equal to zero. If `sema_p()` is called and the value is zero, the calling thread is blocked until another thread performs a `sema_v()` operation on the semaphore.

Semaphores are initialized by calling `sema_init()`. The argument, `val`, gives the initial value for the semaphore. The semaphore storage is provided by the caller but more may be dynamically allocated, if necessary, by `sema_init()`. For this reason, `sema_destroy()` should be called before deallocating the storage containing the semaphore.

`sema_p_sig()` decrements the semaphore, as does `sema_p()`. However, if the semaphore value is zero, `sema_p_sig()` will return without decrementing the value if a signal (that is, from `kill`(2)) is pending for the thread.

`sema_tryp()` will decrement the semaphore value only if it is greater than zero, and will not block.

RETURN VALUES

`0`	`sema_tryp()` could not decrement the semaphore value because it was zero.

1 `sema_p_sig()` was not able to decrement the semaphore value and detected a pending signal.

CONTEXT

These functions can be called from user or interrupt context, except for `sema_init()` and `sema_destroy()`, which can be called from user context only. None of these functions can be called from a high-level interrupt context. In most cases, `sema_v()` and `sema_p()` should not be called from any interrupt context.

If `sema_p()` is used from interrupt context, lower-priority interrupts will not be serviced during the wait. This means that if the thread that will eventually perform the `sema_v()` becomes blocked on anything that requires the lower-priority interrupt, the system will hang.

For example, the thread that will perform the `sema_v()` may need to first allocate memory. This memory allocation may require waiting for paging I/O to complete, which may require a lower-priority disk or network interrupt to be serviced. In general, situations like this are hard to predict, so it is advisable to avoid waiting on semaphores or condition variables in an interrupt context.

SEE ALSO

`kill`(2), `condvar`(9F), `mutex`(9F)

Writing Device Drivers

NAME

sprintf – format characters in memory

SYNOPSIS

```
#include <sys/ddi.h>

char *sprintf(char *buf, const char *fmt, ...));
```

INTERFACE LEVEL

Solaris DDI specific (Solaris DDI).

PARAMETERS

buf Pointer to a character string.

fmt Pointer to a character string.

DESCRIPTION

`sprintf()` builds a string in *buf* under the control of the format *fmt*. The format is a character string with either plain characters, which are simply copied into *buf*, or conversion specifications, each of which converts zero or more arguments, again copied into *buf*. The results are unpredictable if there are insufficient arguments for the format; excess arguments are simply ignored. It is the user's responsibility to ensure that enough storage is available for *buf*.

Conversion Specifications

Each conversion specification is introduced by the `%` character, after which the following appear in sequence:

An optional value specifying a minimum field width for numeric conversion. The converted value will be right-justified and, if it has fewer characters than the minimum, is padded with leading spaces unless the field width is an octal value, then it is padded with leading zeroes.

An optional `l` (`ll`) specifying that a following `d`, `D`, `o`, `O`, `x`, `X`, or `u` conversion character applies to a `long` (`long long`) integer argument. An `l` (`ll`) before any other conversion character is ignored.

A character indicating the type of conversion to be applied:

`d,D,o,O,x,X,u`

The integer argument is converted to signed decimal (`d`, `D`), unsigned octal (`o`, `O`), unsigned hexadecimal (`x`, `X`) or unsigned decimal (`u`), respectively, and copied. The letters `abcdef` are used for `x` and `X` conversion.

`c`

The character value of argument is copied.

`b`

This conversion uses two additional arguments. The first is an integer, and is converted according to the base specified in the second argument. The second argument is a character string in the form `<`*base*`>[<`*arg*`> . . . ]`. The base supplies the conversion base for the first argument as a binary value; \10 gives octal, \20 gives hexadecimal. Each subsequent <arg> is a sequence of characters, the first of which is the bit number to be tested, and subsequent characters, up to the next bit number or terminating null, supply the name of the bit.

A bit number is a binary-valued character in the range 1-32. For each bit set in the first argument, and named in the second argument, the bit names are copied,

separated by commas, and bracketed by < and >. Thus, the following function call would generate `reg=3<BitTwo,BitOne>\n` in *buf*.

```
sprintf(buf, "reg=%b\n", 3, "\10\2BitTwo\1BitOne")
```

`s`

The argument is taken to be a string (character pointer), and characters from the string are copied until a null character is encountered. If the character pointer is `NULL`, the string `<null string>` is used in its place.

`%`

Copy a `%`; no argument is converted.

RETURN VALUES

`sprintf()` returns its first argument, *buf*.

CONTEXT

`sprintf()` can be called from user or interrupt context.

SEE ALSO

Writing Device Drivers

NAME

stoi, numtos – convert between an integer and a decimal string

SYNOPSIS

```
#include <sys/ddi.h>

int stoi(char **str);

void numtos(unsigned long num, char *s);
```

INTERFACE LEVEL

Solaris DDI specific (Solaris DDI).

PARAMETERS

str Pointer to a character string to be converted.

num Decimal number to be converted to a character string.

s Character buffer to hold converted decimal number.

DESCRIPTION

stoi()

`stoi()` returns the integer value of a string of decimal numeric characters beginning at **str*. No overflow checking is done. **str* is updated to point at the last character examined.

numtos()

`numtos()` converts a `long` into a null-terminated character string. No bounds checking is done. The caller must ensure there is enough space to hold the result.

RETURN VALUES

`stoi()` returns the integer value of the string *str*.

CONTEXT

`stoi()` can be called from user or interrupt context.

SEE ALSO

Writing Device Drivers

NOTES

`stoi()` handles only positive integers; it does not handle leading minus signs.

NAME

strchr – find a character in a string

SYNOPSIS

```
#include <sys/ddi.h>
#include <sys/sunddi.h>

char *strchr(const char *str, int chr);
```

INTERFACE LEVEL

Solaris DDI specific (Solaris DDI).

PARAMETERS

str Pointer to a string to be searched.

chr The character to search for.

DESCRIPTION

`strchr()` returns a pointer to the first occurrence of *chr* in the string pointed to by *str*.

RETURN VALUES

`strchr()` returns a pointer to a character, or `NULL`, if the search fails.

CONTEXT

This function can be called from user or interrupt context.

SEE ALSO

`strcmp`(9F)

Writing Device Drivers

NAME

strcmp, strncmp – compare two null-terminated strings.

SYNOPSIS

```
#include <sys/ddi.h>

int strcmp(const char *s1, const char *s2);

int strncmp(const char *s1, const char *s2, size_t n);
```

INTERFACE LEVEL

Solaris DDI specific (Solaris DDI).

PARAMETERS

s1, *s2*	Pointers to character strings.
n	Count of characters to be compared.

DESCRIPTION

strcmp()

`strcmp()` returns `0` if the strings are the same, or the integer value of the expression *(*s1 - *s2)* for the last characters compared if they differ.

strncmp()

`strncmp()` returns `0` if the first *n* characters of *s1* and *s2* are the same, or *(*s1 - *s2)* for the last characters compared if they differ.

RETURN VALUES

`strcmp()` returns `0` if the strings are the same, or *(*s1 - *s2)* for the last characters compared if they differ.

`strncmp()` returns `0` if the first *n* characters of strings are the same, or *(*s1 - *s2)* for the last characters compared if they differ.

CONTEXT

These functions can be called from user or interrupt context.

SEE ALSO

Writing Device Drivers

NAME

strcpy, strncpy – copy a string from one location to another.

SYNOPSIS

```
#include <sys/ddi.h>

char *strcpy(char *dst, char *srs);

char *strncpy(char *dst, char *srs, size_t n);
```

INTERFACE LEVEL

Solaris DDI specific (Solaris DDI).

PARAMETERS

dst , *srs*	Pointers to character strings.
n	Count of characters to be copied.

DESCRIPTION

strcpy()

`strcpy()` copies characters in the string *srs* to *dst*, terminating at the first null character in *srs*, and returns *dst* to the caller. No bounds checking is done.

strncpy()

`strncpy()` copies *srs* to *dst*, null-padding or truncating at *n* bytes, and returns *dst*. No bounds checking is done.

RETURN VALUES

`strcpy()` and `strncpy()` return *dst*.

CONTEXT

`strcpy()` can be called from user or interrupt context.

SEE ALSO

Writing Device Drivers

NAME

strlen – determine the number of non-null bytes in a string

SYNOPSIS

```
#include <sys/ddi.h>

size_t strlen(const char *s);
```

INTERFACE LEVEL

Solaris DDI specific (Solaris DDI).

PARAMETERS

s Pointer to a character string.

DESCRIPTION

`strlen()` returns the number of non-null bytes in the string argument *s*.

RETURN VALUES

`strlen()` returns the number of non-null bytes in *s*.

CONTEXT

`strlen()` can be called from user or interrupt context.

SEE ALSO

Writing Device Drivers

NAME

strlog – submit messages to the log driver

SYNOPSIS

```
#include <sys/stream.h>
 #include <sys/strlog.h>
#include <sys/log.h>
```

```
int strlog(short mid, short sid, char level, unsigned short flags, char
     *fmt, ...));
```

INTERFACE LEVEL

Architecture independent level 1 (DDI/DKI).

PARAMETERS

mid Identification number of the module or driver submitting the message (in the case of a module, its `mi_idnum` value from `module_info`(9S)).

sid Identification number for a particular minor device.

level Tracing level for selective screening of low priority messages. Larger values imply less important information.

flags Valid flag values are:

`SL_ERROR`	Message is for error logger.
`SL_TRACE`	Message is for trace.
`SL_NOTIFY`	Mail copy of message to system administrator.
`SL_CONSOLE`	Log message to console.
`SL_FATAL`	Error is fatal.
`SL_WARN`	Error is a warning.
`SL_NOTE`	Error is a notice.

fmt `printf`(3C) style format string. `%e`, `%g`, and `%G` formats are not allowed but `%s` is supported.

DESCRIPTION

`strlog()` expands the `printf`(3C) style format string passed to it, that is, the conversion specifiers are replaced by the actual argument values in the format string. The 32–bit representations of the arguments (up to `NLORGARGS`) follow the string starting at the next 32–bit boundary following the string. Note that the 64–bit argument will be truncated to 32–bits here but will be fully represented in the string.

The messages can be retrieved with the `getmsg`(2) system call. The *flags* argument specifies the type of the message and where it is to be sent. `strace`(1M) receives messages from the `log` driver and sends them to the standard output. `strerr`(1M) receives error messages from the `log` driver and appends them to a file called `/var/adm/streams/error.`*mm-dd*, where *mm-dd* identifies the date of the error message.

RETURN VALUES

`strlog()` returns `0` if it fails to submit the message to the `log`(7D) driver and `1` otherwise.

CONTEXT

`strlog()` can be called from user or interrupt context.

FILES

`/var/adm/streams/error.`*mm-dd*
Error messages dated *mm-dd* appended by `strerr`(1M) from the `log` driver

SEE ALSO

`strace`(1M), `strerr`(1M), `getmsg`(2), `log`(7D), `module_info`(9S)

Writing Device Drivers

STREAMS Programming Guide

NAME

strqget – get information about a queue or band of the queue

SYNOPSIS

```
#include <sys/stream.h>

int strqget(queue_t *q, qfields_t what, unsigned char pri, void
    *valp);
```

INTERFACE LEVEL

Architecture independent level 1 (DDI/DKI).

PARAMETERS

q Pointer to the queue.

what Field of the `queue` structure for (or the specified priority band) to return information about. Valid values are one of:

`QHIWAT`	High water mark.
`QLOWAT`	Low water mark.
`QMAXPSZ`	Largest packet accepted.
`QMINPSZ`	Smallest packet accepted.
`QCOUNT`	Approximate size (in bytes) of data.
`QFIRST`	First message.
`QLAST`	Last message.
`QFLAG`	Status.

pri Priority band of interest.

valp The address of where to store the value of the requested field.

DESCRIPTION

`strqget()` gives drivers and modules a way to get information about a queue or a particular band of a queue without directly accessing STREAMS data structures, thus insulating them from changes in the implementation of these data structures from release to release.

RETURN VALUES

On success, `0` is returned and the value of the requested field is stored in the location pointed to by *valp*. An error number is returned on failure.

CONTEXT

`strqget()` can be called from user or interrupt context.

SEE ALSO

`freezestr`(9F), `strqset`(9F), `unfreezestr`(9F), `queue`(9S)

Writing Device Drivers

STREAMS Programming Guide

NOTES

The stream must be frozen using `freezestr`(9F) before calling `strqget()`.

NAME

strqset – change information about a queue or band of the queue

SYNOPSIS

```
#include <sys/stream.h>

int strqset(queue_t *q, qfields_t what, unsigned char pri, intptr_t
    val);
```

INTERFACE LEVEL

Architecture independent level 1 (DDI/DKI).

PARAMETERS

q Pointer to the queue.

what Field of the `queue` structure (or the specified priority band) to return information about. Valid values are one of:

- `QHIWAT` High water mark.
- `QLOWAT` Low water mark.
- `QMAXPSZ` Largest packet accepted.
- `QMINPSZ` Smallest packet accepted.

pri Priority band of interest.

val The value for the field to be changed.

DESCRIPTION

`strqset()` gives drivers and modules a way to change information about a queue or a particular band of a queue without directly accessing STREAMS data structures.

RETURN VALUES

On success, `0` is returned. `EINVAL` is returned if an undefined attribute is specified.

CONTEXT

`strqset()` can be called from user or interrupt context.

SEE ALLOW

`freezestr`(9F), `strqget`(9F), `unfreezestr`(9F), `queue`(9S)

Writing Device Drivers

STREAMS Programming Guide

NOTES

The stream must be frozen using `freezestr`(9F) before calling `strqset()`

To set the values of `QMINPSZ` and `QMAXPSZ` from within a single call to `freezestr`(9F) and `unfreezestr`(9F): when lowering the existing values, set `QMINPSZ` before setting `QMAXPSZ`; when raising the existing values, set `QMAXPSZ` before setting `QMINPSZ`.

NAME

STRUCT_DECL, SIZEOF_PTR, SIZEOF_STRUCT, STRUCT_BUF, STRUCT_FADDR, STRUCT_FGET, STRUCT_FGETP, STRUCT_FSET, STRUCT_FSETP, STRUCT_HANDLE, STRUCT_INIT, STRUCT_SIZE, STRUCT_SET_HANDLE – 32–bit application data access macros

SYNOPSIS

```
#include <sys/ddi.h>
#include <sys/sunddi.h>
```

STRUCT_DECL(*structname*, *handle*);

STRUCT_HANDLE(*structname*, *handle*);

void **STRUCT_INIT**(*handle*, model_t *umodel*);

void **STRUCT_SET_HANDLE**(*handle*, model_t *umodel*, void **addr*);

STRUCT_FGET(*handle*, *field*);

STRUCT_FGETP(*handle*, *field*);

STRUCT_FSET(*handle*, *field*, *val*);

STRUCT_FSETP(*handle*, *field*, *val*);

<typeof field> ***STRUCT_FADDR**(*handle*, *field*);

struct structname ***STRUCT_BUF**(*handle*);

size_t **SIZEOF_STRUCT**(*structname*, *umodel*);

size_t **SIZEOF_PTR**(*umodel*);

size_t **STRUCT_SIZE**(*handle*);

INTERFACE LEVEL

Solaris DDI specific (Solaris DDI).

PARAMETERS

The macros take the following parameters:

structname — The structure name (as would appear *after* the C keyword "struct") of the native form.

umodel — A bit field containing either ILP32 model bit (DATAMODEL_ILP32), or the LP64 model get (DATAMODEL_ILP64). In an `ioctl`(9E), these bits will be present in the flag parameter; in a `devmap`(9E), they will be present in the model parameter `mmap`(9E) and can call `ddi_mmap_get_model`(9F) to get the data model of the current thread.

handle — The variable name used to refer to a particular instance of a structure which is handled by these macros.

field — The field name within the structure contain substructures. If the structures contain substructures, unions, or arrays, then *field* can be whether complex expression could occur after the first "." or "->".

DESCRIPTION

The above macros allow a device driver to access data consumed from a 32-bit application regardless whether the driver was compiled to the ILP32 or LP64 data model. These macros effectively hide the difference between the data model of the user application and the driver.

The macros can be broken up into two main categories, the macros that declare and initialize structure handles and the macros that operate on these structures using the structure handles.

Declaration and Initialization Macros

The macros `STRUCT_DECL()` and `STRUCT_HANDLE()` declare structure handles on the stack, whereas the macros `STRUCT_INIT()` and `STRUCT_SET_HANDLE()` initialize the structure handles to point to an instance of the native form structure.

The macros `STRUCT_HANDLE()` and `STRUCT_SET_HANDLE()` are used to declare and initialize a structure handle to an existing data structure, for example, ioctls within a STREAMS module.

The macros `STRUCT_DECL()` and `STRUCT_INIT()`, on the other hand, are used in modules which declare and initialize a structure handle to a data structure allocated by `STRUCT_DECL()`, that is, any standard character or block device driver `ioctl`(9E) routine that needs to copy in data from a user-mode program.

STRUCT_DECL(structname, handle)
: Declares a “structure handle” for a “struct” and allocates an instance of its native form on the stack. It is assumed that the native form is larger than or equal to the ILP32 form. *handle* is a variable name and is declared as a variable by this macro.

void STRUCT_INIT(handle, model_t umodel)
: Initializes *handle* to point to the instance allocated by `STRUCT_DECL()`, it also sets data model for *handle* to *umodel*, and must be called before any access is made through the macros that operate on these structures. When used in an `ioctl`(9E) routine *umodel* is the flag parameter; in `adevmap`(9E) routine *umodel* is the model parameter and in a `mmap`(9E) routine, is the return value of `ddi_mmap_get_model`(9F). This macro is intended for handles created with `STRUCT_DECL()` only.

STRUCT_HANDLE(structname, handle)
: Declares a “structure handle” *handle* but unlike `STRUCT_DECL()` does not allocate an instance of "struct ".

void STRUCT_SET_HANDLE(handle, model_t umodel, void *addr)
: Initializes to point to the native form instance at *addr*, it also sets the data model for *handle* to *umodel*. This is intended for handles created with `STRUCT_HANDLE()`. Fields cannot be referenced via the *handle* until this macro has been invoked. Typically, *addr* is the address of the native form structure containing the user-mode programs data. When used in an `ioctl`(9E) *umodel* is the flag parameter, in a `devmap`(9E) routine is the model parameter and in a `mmap`(9E) routine, *umodel* is the return value of `ddi_mmap_get_model`(9F).

Operation Macros

size_t STRUCT_SIZE(handle)
Returns size of the structure referred to by *handle*. It will return the size depending upon the data model associated with *handle*. If the data model stored by `STRUCT_INIT()` or `STRUCT_SET_HANDLE()` was DATAMODEL_ILP32, it will return the size of the ILP32 form, else it will return the size of the native form.

STRUCT_FGET(handle, field)
Returns the contents of *field* in the structure described by *handle* according to the data model associated with *handle*.

STRUCT_FGETP(handle, field)
This is the same as `STRUCT_FGET()` except that the *field* in question is a pointer of some kind. This macro will cast caddr32_t to a (void *) when it is accessed. Failure to use this macro for a pointer will lead to compiler warnings or failures.

STRUCT_FSET(handle, field, val)
Assigns *val* to the (non pointer) in the structure *handle* described by . It should not be used within any other expression, but rather only as a statement.

STRUCT_FSETP(handle, field, val)
Returns a pointer to the in the structure described by *handle*.

struct structname *STRUCT_BUF(handle)
Returns a pointer to the native mode instance of the structure described by *handle*.

Macros Not Using Handles

size_t SIZEOF_STRUCT(structname, umodel)
Returns size of *structname* based on *umodel*.

size_t SIZEOF_PTR(umodel)
Returns the size of a pointer based on *umodel*.

EXAMPLES

EXAMPLE 1 Copying a Structure

The following example uses an `ioctl`(9E) on a regular character device that copies a data structure that looks like this into the kernel:

```
struct opdata {
    size_t  size;
    uint_t  flag;
};
```

EXAMPLE 2 Defining a Structure

This data structure definition describes what the `ioctl`(9E) would look like in a 32-bit application using fixed width types.

```
#if defined(_MULTI_DATAMODEL)
struct opdata32 {
    size32_t    size;
    uint32_t    flag;
};
#endif
```

EXAMPLE 3 Using `STRUCT_DECL()` and `STRUCT_INIT()`

Note: This example uses the `STRUCT_DECL()` and `STRUCT_INIT()` macros to declare and initialize the structure handle.

```
int
xxioctl(dev_t dev, int cmd, intptr_t arg, int mode,
    cred_t *cr, int *rval_p);
{
    STRUCT_DECL(opdata, op);

    if (cmd != OPONE)
        return (ENOTTY);

    STRUCT_INIT(op, mode);

    if (copyin((void *)data,
        STRUCT_BUF(op), STRUCT_SIZE(op)))
        return (EFAULT);

    if (STRUCT_FGET(op, flag) != FACTIVE ||
        STRUCT_FGET(op, size) > sizeof (device_state))
        return (EINVAL);
    xxdowork(device_state, STRUCT_FGET(op, size));
    return (0);
}
```

This piece of code is an excerpt from a STREAMS module that handles `ioctl`(9E) data (M_IOCDATA) messages and uses the data structure defined above. This code has been written to run in the ILP32 environment only.

EXAMPLE 4 Using `STRUCT_HANDLE()` and `STRUCT_SET_HANDLE()`

The next example illustrates the use of the `STRUCT_HANDLE()` and `STRUCT_SET_HANDLE()` macros which declare and initialize the structure handle to point to an already existing instance of the structure.

The above code example can be converted to run in the LP64 environment using the `STRUCT_HANDLE()` and `STRUCT_SET_HANDLE()` as follows:

```
struct strbuf {
int maxlen;     /* no. of bytes in buffer */
int len;        /* no. of bytes returned */
caddr_t buf;        /* pointer to data */
};

static void
wput_iocdata(queue_t *q, mblk_t *msgp)
{
        mblk_t  *data;  /* message block descriptor */
        STRUCT_HANDLE(strbuf, sb);

    /* copyin the data */
    if (mi_copy_state(q, mp, &data) == -1) {
                return;
    }
```

EXAMPLE 4 Using `STRUCT_HANDLE()` and `STRUCT_SET_HANDLE()` *(Continued)*

```
        STRUCT_SET_HANDLE(sb,((struct iocblk *)msgp->b_rptr)->ioc_flag,
            (void *)data->b_rptr);
        if (STRUCT_FGET(sb, maxlen) < (int)sizeof (ipa_t)) {
                mi_copy_done(q, msgp, EINVAL);
        return;
    }
}
```

SEE ALSO

`devmap`(9E), `ioctl`(9E), `mmap`(9E),`ddi_mmap_get_model`(9F)

Writing Device Drivers

STREAMS Programming Guide

NAME

swab – swap bytes in 16-bit halfwords

SYNOPSIS

```
#include <sys/sunddi.h>

void swab(void *src, void *dst, size_t nbytes);
```

INTERFACE LEVEL

Architecture independent level 1 (DDI/DKI).

PARAMETERS

src A pointer to the buffer containing the bytes to be swapped.

dst A pointer to the destination buffer where the swapped bytes will be written. If *dst* is the same as *src* the buffer will be swapped in place.

nbytes Number of bytes to be swapped, rounded down to the nearest half-word.

DESCRIPTION

`swab()` copies the bytes in the buffer pointed to by *src* to the buffer pointer to by *dst*, swapping the order of adjacent bytes in half-word pairs as the copy proceeds. A total of *nbytes* bytes are copied, rounded down to the nearest half-word.

CONTEXT

`swab()` can be called from user or interrupt context.

SEE ALSO

Writing Device Drivers

NOTES

Since `swab()` operates byte-by-byte, it can be used on non-aligned buffers.

NAME

testb – check for an available buffer

SYNOPSIS

```
#include <sys/stream.h>

int testb(size_t size, uint_t pri);
```

INTERFACE LEVEL

Architecture independent level 1 (DDI/DKI).

PARAMETERS

size Size of the requested buffer.

pri Priority of the allocb request.

DESCRIPTION

`testb()` checks to see if an `allocb`(9F) call is likely to succeed if a buffer of `size` bytes at priority *pri* is requested. Even if `testb()` returns successfully, the call to `allocb`(9F) can fail. The *pri* argument is no longer used, but is retained for compatibility.

RETURN VALUES

Returns `1` if a buffer of the requested size is available, and `0` if one is not.

CONTEXT

`testb()` can be called from user or interrupt context.

EXAMPLES

EXAMPLE 1 `testb()` example

In a service routine, if `copymsg`(9F) fails (line 6), the message is put back on the queue (line 7) and a routine, `tryagain`, is scheduled to be run in one tenth of a second. Then the service routine returns.

When the `timeout`(9F) function runs, if there is no message on the front of the queue, it just returns. Otherwise, for each message block in the first message, check to see if an allocation would succeed. If the number of message blocks equals the number we can allocate, then enable the service procedure. Otherwise, reschedule `tryagain` to run again in another tenth of a second. Note that `tryagain` is merely an approximation. Its accounting may be faulty. Consider the case of a message comprised of two 1024-byte message blocks. If there is only one free 1024-byte message block and no free 2048-byte message blocks, then `testb()` will still succeed twice. If no message blocks are freed of these sizes before the service procedure runs again, then the `copymsg`(9F) will still fail. The reason `testb()` is used here is because it is significantly faster than calling `copymsg`. We must minimize the amount of time spent in a `timeout()` routine.

```
 1  xxxsrv(q)
 2      queue_t *q;
 3  {
 4    mblk_t *mp;
 5    mblk_t *nmp;
        . . .
 6    if ((nmp = copymsg(mp)) == NULL) {
 7        putbq(q, mp);
 8        timeout(tryagain, (intptr_t)q, drv_usectohz(100000));
 9        return;
10    }
    . . .
11  }
```

EXAMPLE 1 `testb()` example *(Continued)*

```

tryagain(q)
    queue_t *q;
{
  register int can_alloc = 0;
  register int num_blks = 0;
  register mblk_t *mp;

  if (!q->q_first)
      return;
  for (mp = q->q_first; mp; mp = mp->b_cont) {
      num_blks++;
      can_alloc += testb((mp->b_datap->db_lim -
          mp->b_datap->db_base), BPRI_MED);
  }
  if (num_blks == can_alloc)
      qenable(q);
  else
      timeout(tryagain, (intptr_t)q, drv_usectohz(100000));
}
```

SEE ALSO

`allocb`(9F), `bufcall`(9F), `copymsg`(9F), `timeout`(9F)

Writing Device Drivers

STREAMS Programming Guide

NOTES

The *pri* argument is provided for compatibility only. Its value is ignored.

NAME

timeout – execute a function after a specified length of time

SYNOPSIS

```
#include <sys/types.h>
#include <sys/conf.h>
```

`timeout_id_t` **`timeout`**`(void (*` *func*`)(void *), void *`*arg*`, clock_t` *ticks*`);`

INTERFACE LEVEL

Architecture independent level 1 (DDI/DKI).

PARAMETERS

func	Kernel function to invoke when the time increment expires.
arg	Argument to the function.
ticks	Number of clock ticks to wait before the function is called. Use `drv_usectohz`(9F) to convert microseconds to clock ticks.

DESCRIPTION

The `timeout()` function schedules the specified function to be called after a specified time interval. The exact time interval over which the timeout takes effect cannot be guaranteed, but the value given is a close approximation.

The function called by `timeout()` must adhere to the same restrictions as a driver soft interrupt handler.

The function called by `timeout()` is run in interrupt context and must not sleep or call other functions that might sleep.

The `delay`(9F) function calls `timeout()`. Because `timeout()` is subject to priority inversion, drivers waiting on behalf of processes with real-time constraints should use `cv_timedwait`(9F) rather than `delay()`.

RETURN VALUES

`timeout()` returns an opaque non-zero `timeout` identifier that can be passed to `untimeout`(9F) to cancel the request.

CONTEXT

`timeout()` can be called from user or interrupt context.

EXAMPLES

EXAMPLE 1 Using `timeout()`

In the following example, the device driver has issued an IO request and is waiting for the device to respond. If the device does not respond within 5 seconds, the device driver will print out an error message to the console.

```
static void
xxtimeout_handler(void *arg)
{
        struct xxstate *xsp = (struct xxstate *)arg;
        mutex_enter(&xsp->lock);
        cv_signal(&xsp->cv);
        xsp->flags |= TIMED_OUT;
        mutex_exit(&xsp->lock);
        xsp->timeout_id = 0;
}
static uint_t
xxintr(caddr_t arg)
{
```

EXAMPLE 1 Using `timeout()` *(Continued)*

```
        struct xxstate *xsp = (struct xxstate *)arg;
         .
         .
         .
        mutex_enter(&xsp->lock);
        /* Service interrupt */
        cv_signal(&xsp->cv);
        mutex_exit(&xsp->lock);
        if (xsp->timeout_id != 0) {
                (void) untimeout(xsp->timeout_id);
                xsp->timeout_id = 0;
        }
        return(DDI_INTR_CLAIMED);
}
static void
xxcheckcond(struct xxstate *xsp)
{
         .
         .
         .
        xsp->timeout_id = timeout(xxtimeout_handler,
            xsp, (5 * drv_usectohz(1000000)));
        mutex_enter(&xsp->lock);
        while (/* Waiting for interrupt  or timeout*/)
                cv_wait(&xsp->cv, &xsp->lock);
        if (xsp->flags & TIMED_OUT)
                cmn_err(CE_WARN, "Device not responding");
         .
         .
         .
        mutex_exit(&xsp->lock);
         .
         .
         .
}
```

SEE ALSO

`bufcall`(9F), `cv_timedwait`(9F), `ddi_in_panic`(9F), `delay`(9F), `drv_usectohz`(9F), `untimeout`(9F)

Writing Device Drivers

NAME

uiomove – copy kernel data using uio structure

SYNOPSIS

```
#include <sys/types.h>
#include <sys/uio.h>

int uiomove(caddr_t address, size_t nbytes, enum uio_rw rwflag, uio_t
     *uio_p);
```

INTERFACE LEVEL

Architecture independent level 1 (DDI/DKI).

PARAMETERS

address	Source/destination kernel address of the copy.
nbytes	Number of bytes to copy.
rwflag	Flag indicating read or write operation. Possible values are `UIO_READ` and `UIO_WRITE`.
uio_p	Pointer to the `uio` structure for the copy.

DESCRIPTION

The `uiomove()` function copies *nbytes* of data to or from the space defined by the `uio` structure (described in `uio`(9S)) and the driver.

The `uio_segflg` member of the `uio`(9S) structure determines the type of space to or from which the transfer is being made. If it is set to `UIO_SYSSPACE`, the data transfer is between addresses in the kernel. If it is set to `UIO_USERSPACE`, the transfer is between a user program and kernel space.

rwflag indicates the direction of the transfer. If `UIO_READ` is set, the data will be transferred from *address* to the buffer(s) described by *uio_p*. If `UIO_WRITE` is set, the data will be transferred from the buffer(s) described by *uio_p* to *address*.

In addition to moving the data, `uiomove()` adds the number of bytes moved to the `iov_base` member of the `iovec`(9S) structure, decreases the `iov_len` member, increases the `uio_offset` member of the `uio`(9S) structure, and decreases the `uio_resid` member.

This function automatically handles page faults. *nbytes* does not have to be word-aligned.

RETURN VALUES

`uiomove()` returns `0` upon success or `EFAULT` on failure.

CONTEXT

User context only, if `uio_segflg` is set to `UIO_USERSPACE`. User or interrupt context, if `uio_segflg` is set to `UIO_SYSSPACE`.

SEE ALSO

`ureadc`(9F), `uwritec`(9F), `iovec`(9S), `uio`(9S)

Writing Device Drivers

WARNINGS

If `uio_segflg` is set to `UIO_SYSSPACE` and *address* is selected from user space, the system may panic.

NAME

unbufcall – cancel a pending bufcall request

SYNOPSIS

```
#include <sys/stream.h>

void unbufcall(bufcall_id_t id);
```

INTERFACE LEVEL

Architecture independent level 1 (DDI/DKI).

PARAMETERS

id Identifier returned from `bufcall`(9F) or `esbbcall`(9F) .

DESCRIPTION

`unbufcall` cancels a pending `bufcall()` or `esbbcall()` request. The argument `id` is a non-zero identifier for the request to be cancelled. `id` is returned from the `bufcall()` or `esbbcall()` function used to issue the request. `unbufcall()` will not return until the pending callback is cancelled or has run. Because of this, locks acquired by the callback routine should not be held across the call to `unbufcall()` or deadlock may result.

RETURN VALUES

None.

CONTEXT

`unbufcall()` can be called from user or interrupt context.

SEE ALSO

`bufcall`(9F), `esbbcall`(9F)

Writing Device Drivers

STREAMS Programming Guide

NAME

unlinkb – remove a message block from the head of a message

SYNOPSIS

```
#include <sys/stream.h>

mblk_t *unlinkb(mblk_t *mp);
```

INTERFACE LEVEL

Architecture independent level 1 (DDI/DKI).

PARAMETERS

mp Pointer to the message.

DESCRIPTION

`unlinkb()` removes the first message block from the message pointed to by *mp*. A new message, minus the removed message block, is returned.

RETURN VALUES

If successful, `unlinkb()` returns a pointer to the message with the first message block removed. If there is only one message block in the message, `NULL` is returned.

CONTEXT

`unlinkb()` can be called from user or interrupt context.

EXAMPLES

EXAMPLE 1 `unlinkb()` example

The routine expects to get passed an `M_PROTO` `T_DATA_IND` message. It will remove and free the `M_PROTO` header and return the remaining `M_DATA` portion of the message.

```
mblk_t *
makedata(mp)
    mblk_t *mp;
{
  mblk_t *nmp;

  nmp = unlinkb(mp);
  freeb(mp);
  return(nmp);
}
```

SEE ALSO

`linkb`(9F)

Writing Device Drivers

STREAMS Programming Guide

NAME

untimeout – cancel previous timeout function call

SYNOPSIS

```
#include <sys/types.h>
#include <sys/conf.h>

clock_t untimeout(timeout_id_t id);
```

INTERFACE LEVEL

Architecture independent level 1 (DDI/DKI).

PARAMETERS

id Opaque timeout `ID` from a previous `timeout`(9F) call.

DESCRIPTION

`untimeout()` cancels a pending `timeout`(9F) request. `untimeout()` will not return until the pending callback is cancelled or has run. Because of this, locks acquired by the callback routine should not be held across the call to `untimeout()` or a deadlock may result.

Since no mutex should be held across the call to `untimeout()`, there is a race condition between the occurrence of an expected event and the execution of the timeout handler. In particular, it should be noted that no problems will result from calling `untimeout()` for a timeout which is either running on another CPU, or has already completed. Drivers should be structured with the understanding that the arrival of both an interrupt and a timeout for that interrupt can occasionally occur, in either order.

RETURN VALUES

`untimeout()` returns `-1` if the *id* is not found. Otherwise, it returns an integer value greater than or equal to `0`.

CONTEXT

`untimeout()` can be called from user or interrupt context.

EXAMPLES

EXAMPLE 1 Using the `untimeout()` Function

In the following example, the device driver has issued an IO request and is waiting for the device to respond. If the device does not respond within 5 seconds, the device driver will print out an error message to the console.

```
static void
xxtimeout_handler(void *arg)
{
        struct xxstate *xsp = (struct xxstate *)arg;
        mutex_enter(&xsp->lock);
        cv_signal(&xsp->cv);
        xsp->flags |= TIMED_OUT;
        mutex_exit(&xsp->lock);
        xsp->timeout_id = 0;
}
static uint_t
xxintr(caddr_t arg)
{
        struct xxstate *xsp = (struct xxstate *)arg;
          .
          .
          .
        mutex_enter(&xsp->lock);
        /* Service interrupt */
```

EXAMPLE 1 Using the `untimeout()` Function *(Continued)*

```
        cv_signal(&xsp->cv);
        mutex_exit(&xsp->lock);
        if (xsp->timeout_id != 0) {
                (void) untimeout(xsp->timeout_id);
                xsp->timeout_id = 0;
        }
        return(DDI_INTR_CLAIMED);
}
static void
xxcheckcond(struct xxstate *xsp)
{
         .
         .
         .
        xsp->timeout_id = timeout(xxtimeout_handler,
            xsp, (5 * drv_usectohz(1000000)));
        mutex_enter(&xsp->lock);
        while (/* Waiting for interrupt  or timeout*/)
                cv_wait(&xsp->cv, &xsp->lock);
        if (xsp->flags & TIMED_OUT)
                cmn_err(CE_WARN, "Device not responding");
         .
         .
         .
        mutex_exit(&xsp->lock);
         .
         .
         .
}
```

SEE ALSO

`open`(9E), `cv_signal`(9F), `cv_wait_sig`(9F), `delay`(9F), `timeout`(9F)

Writing Device Drivers

NAME

ureadc – add character to a uio structure

SYNOPSIS

```
#include <sys/uio.h>
#include <sys/types.h>

int ureadc(int c, uio_t *uio_p);
```

INTERFACE LEVEL

Architecture independent level 1 (DDI/DKI).

PARAMETERS

c The character added to the `uio`(9S) structure.

uio_p Pointer to the `uio`(9S) structure.

DESCRIPTION

`ureadc()` transfers the character *c* into the address space of the `uio`(9S) structure pointed to by *uio_p*, and updates the `uio` structure as for `uiomove`(9F).

RETURN VALUES

`0` is returned on success and `EFAULT` on failure.

CONTEXT

`ureadc()` can be called from user or interrupt context.

SEE ALSO

`uiomove`(9F), `uwritec`(9F), `iovec`(9S), `uio`(9S)

Writing Device Drivers

NAME

uwritec – remove a character from a uio structure

SYNOPSIS

```
#include <sys/uio.h>

int uwritec(uio_t *uio_p);
```

INTERFACE LEVEL

Architecture independent level 1 (DDI/DKI).

PARAMETERS

uio_p Pointer to the `uio`(9S) structure.

DESCRIPTION

`uwritec()` returns a character from the `uio` structure pointed to by *uio_p* and updates the `uio` structure as for `uiomove`(9F).

RETURN VALUES

The next character for processing is returned on success, and `-1` is returned if `uio` is empty or there is an error.

CONTEXT

`uwritec()` can be called from user or interrupt context.

SEE ALSO

`uiomove`(9F), `ureadc`(9F), `iovec`(9S), `uio`(9S)

Writing Device Drivers

NAME

va_arg, va_start, va_copy, va_end – handle variable argument list

SYNOPSIS

```
#include <sys/varargs.h>

void va_start(va_list pvar, void parmN);

(type *)

va_arg(va_list pvar, type);

void va_copy(va_list dest, va_list src);

void va_end(va_list pvar);
```

INTERFACE LEVEL

Solaris DDI specific (Solaris DDI).

PARAMETERS

va_start()	*pvar*	Pointer to variable argument list.
	name	Identifier of rightmost parameter in the function definition.
va_arg()	*pvar*	Pointer to variable argument list.
	type	Type name of the next argument to be returned.
va_copy()	*dest*	Destination variable argument list.
	src	Source variable argument list.
va_end()	*pvar*	Pointer to variable argument list.

DESCRIPTION

This set of macros allows portable procedures that accept variable argument lists to be written. Routines that have variable argument lists but do not use the `varargs()` macros are inherently non-portable, as different machines use different argument-passing conventions. Routines that accept a variable argument list can use these macros to traverse the list.

`va_list` is the type defined for the variable used to traverse the list of arguments.

`va_start()` is called to initialize *pvar* to the beginning of the variable argument list. `va_start()` must be invoked before any access to the unnamed arguments. The parameter *name* is the identifier of the rightmost parameter in the variable parameter list in the function definition (the one just before the "`, . . .`"). If this parameter is declared with the `register` storage class or with a function or array type, or with a type that is not compatible with the type that results after application of the default argument promotions, the behavior is undefined.

`va_arg()` expands to an expression that has the type and value of the next argument in the call. The parameter *pvar* must be initialized by `va_start()`. Each invocation of `va_arg()` modifies *pvar* so that the values of successive arguments are returned in turn. The parameter *type* is the type name of the next argument to be returned. The type name must be specified in such a way so that the type of a pointer to an object

that has the specified type can be obtained simply by postfixing a `*` to *type*. If there is no actual next argument, or if `type` is not compatible with the type of the actual next argument (as promoted according to the default argument promotions), the behavior is undefined.

The `va_copy()` macro saves the state represented by the `va_list` *src* in the `va_list` *dest*. The `va_list` passed as *dest* should not be initialized by a previous call to `va_start()`, and must be passed to `va_end()` before being reused as a parameter to `va_start()` or as the *dest* parameter of a subsequent call to `va_copy()`. The behavior is undefined should any of these restrictions not be met.

The `va_end()` macro is used to clean up. It invalidates *pvar* for use (unless `va_start()` is invoked again).

Multiple traversals, each bracketed by a call to `va_start()` and `va_end()`, are possible.

EXAMPLES

EXAMPLE 1 Creating a Variable Length Command

The following example uses these routines to create a variable length command. This may be useful for a device which provides for a variable length command set. `ncmdbytes` is the number of bytes in the command. The new command is written to `cmdp`.

```
static void
xx_write_cmd(uchar_t *cmdp, int ncmdbytes, ...)
{
        va_list    ap;
        int    i;

           /*
         * Write variable-length command to destination
            */
         va_start(ap, ncmdbytes);
         for (i = 0; i < ncmdbytes; i++) {
                  *cmdp++ = va_arg(ap, uchar_t);
            }
         va_end(ap);
}
```

SEE ALSO

`vcmn_err`(9F), `vsprintf`(9F)

NOTES

It is up to the calling routine to specify in some manner how many arguments there are, since it is not always possible to determine the number of arguments from the stack frame.

It is non-portable to specify a second argument of `char` or `short` to `va_arg`, because arguments seen by the called function are not `char` or `short`. C converts `char` and `short` arguments to `int` before passing them to a function.

NAME

vsprintf – format characters in memory

SYNOPSIS

```
#include <sys/varargs.h>
 #include <sys/ddi.h>
 #include <sys/sunddi.h>

char *vsprintf(char *buf, const char *fmt, va_list ap);
```

INTERFACE LEVEL

Solaris DDI specific (Solaris DDI).

PARAMETERS

buf Pointer to a character string.

fmt Pointer to a character string.

ap Pointer to a variable argument list.

DESCRIPTION

`vsprintf()` builds a string in *buf* under the control of the format *fmt*. The format is a character string with either plain characters, which are simply copied into *buf*, or conversion specifications, each of which converts zero or more arguments, again copied into *buf*. The results are unpredictable if there are insufficient arguments for the format; excess arguments are simply ignored. It is the user's responsibility to ensure that enough storage is available for *buf*.

ap contains the list of arguments used by the conversion specifications in *fmt*. *ap* is a variable argument list and must be initialized by calling `va_start`(9F). `va_end`(9F) is used to clean up and must be called after each traversal of the list. Multiple traversals of the argument list, each bracketed by `va_start`(9F) and `va_end`(9F), are possible.

Each conversion specification is introduced by the `%` character, after which the following appear in sequence:

An optional decimal digit specifying a minimum field width for numeric conversion. The converted value will be right-justified and padded with leading zeroes if it has fewer characters than the minimum.

An optional `l` (`ll`) specifying that a following `d`, `D`, `o`, `O`, `x`, `X`, or `u` conversion character applies to a `long` (`long long`) integer argument. An `l` (`ll`) before any other conversion character is ignored.

A character indicating the type of conversion to be applied:

`d,D,o,O,x,X,u`
: The integer argument is converted to signed decimal (`d`, `D`), unsigned octal (`o`, `O`), unsigned hexadecimal (`x`, `X`) or unsigned decimal (`u`), respectively, and copied. The letters `abcdef` are used for `x` and `X` conversion.

`c`
: The character value of the argument is copied.

`b`
: This conversion uses two additional arguments. The first is an integer, and is converted according to the base specified in the second argument. The second argument is a character string in the form *<base>*`[`*<arg>* `. . . ]`. The base

supplies the conversion base for the first argument as a binary value; \10 gives octal, \20 gives hexadecimal. Each subsequent <arg> is a sequence of characters, the first of which is the bit number to be tested, and subsequent characters, up to the next bit number or terminating null, supply the name of the bit.

A bit number is a binary-valued character in the range `1-32`. For each bit set in the first argument, and named in the second argument, the bit names are copied, separated by commas, and bracketed by < and >. Thus, the following function call would generate `reg=3<BitTwo,BitOne>\n` in *buf*.

```
vsprintf(buf, "reg=%b\n", 3, "\10\2BitTwo\1BitOne")
```

`s`

The argument is taken to be a string (character pointer), and characters from the string are copied until a null character is encountered. If the character pointer is `NULL` on SPARC, the string `<nullstring>` is used in its place; on IA, it is undefined.

`%`

Copy a `%`; no argument is converted.

RETURN VALUES

`vsprintf()` returns its first parameter, *buf*.

CONTEXT

`vsprintf()` can be called from user, kernel, or interrupt context.

EXAMPLES

EXAMPLE 1 Using `vsprintf()`

In this example, `xxerror()` accepts a pointer to a `dev_info_t` structure `dip`, an error level `level`, a format `fmt`, and a variable number of arguments. The routine uses `vsprintf()` to format the error message in `buf`. Note that `va_start`(9F) and `va_end`(9F) bracket the call to `vsprintf()`. `instance`, `level`, `name`, and `buf` are then passed to `cmn_err`(9F).

```
#include <sys/varargs.h>
#include <sys/ddi.h>
#include <sys/sunddi.h>
#define MAX_MSG 256

void
xxerror(dev_info_t *dip, int level, const char *fmt, . . . )
{
    va_list        ap;
    int        instance;
    char        buf[MAX_MSG],
            *name;

    instance = ddi_get_instance(dip);
    name = ddi_binding_name(dip);

    /* format buf using fmt and arguments contained in ap */
    va_start(ap, fmt);
    vsprintf(buf, fmt, ap);
    va_end(ap);

    /* pass formatted string to cmn_err(9F) */
```

EXAMPLE 1 Using `vsprintf()` *(Continued)*

```
    cmn_err(level, "%s%d: %s", name, instance, buf);
}
```

SEE ALSO

`cmn_err`(9F), `ddi_binding_name`(9F), `ddi_get_instance`(9F), `va_arg`(9F)

Writing Device Drivers

NAME

WR, wr – get pointer to the write queue for this module or driver

SYNOPSIS

```
#include <sys/stream.h>
#include <sys/ddi.h>

queue_t *WR(queue_t *q);
```

INTERFACE LEVEL

Architecture independent level 1 (DDI/DKI).

PARAMETERS

q Pointer to the *read* queue whose *write* queue is to be returned.

DESCRIPTION

The `WR()` function accepts a *read* queue pointer as an argument and returns a pointer to the *write* queue of the same module.

CAUTION: Make sure the argument to this function is a pointer to a *read* queue. `WR()` will not check for queue type, and a system panic could result if the pointer is not to a *read* queue.

RETURN VALUES

The pointer to the *write* queue.

CONTEXT

`WR()` can be called from user or interrupt context.

EXAMPLES

EXAMPLE 1 Using `WR()`

In a STREAMS `close`(9E) routine, the driver or module is passed a pointer to the *read* queue. These usually are set to the address of the module-specific data structure for the minor device.

```
xxxclose(q, flag)
    queue_t *q;
    int flag;
{
            q->q_ptr = NULL;
        WR(q)->q_ptr = NULL;
            . . .
}
```

SEE ALSO

`close`(9E), `OTHERQ`(9F), `RD`(9F)

Writing Device Drivers

STREAMS Programming Guide

Index

C

D

E

F

G

H

I

K

L

M

N

O

P

Q

R

S

T

U

V

W

Z