Sun Storage 2500-M2 Arrays

Hardware Installation Guide

Part No.: E20740-01
June 2011

Please
Recycle

Adobe PostScript

Contents

About This Guide

This *Sun Storage 2500-M2 Arrays Hardware Installation Guide* describes how to install array trays in a cabinet, physically set up and connect your array to a host, apply power and to add network functionality, including storage management (multipath/failover), IP addressing, and DHCP.

The terminology used in this document refers to the Sun Storage 2500-M2 Arrays. There are two styles of controller trays, each with different host interface ports (SAS or FC). There is also the expansion tray, which enables the Sun Storage 2500-M2 Arrays to have more disk drives attached. The components that slide into the trays are called customer replaceable units (CRUs) or modules.

Array management, data host management, and remote command line interface (CLI) functions are performed by the Sun Storage Common Array Manager (CAM) software. For installation and initial configuration of the array, including firmware upgrades, initial array setup, partitioning domains, configuring storage, and configuring IP addressing, see the *Sun Storage Common Array Manager Installation and Setup Guide*.

Before You Begin

Refer to the following documents to make sure physical dimensions, service clearances, and power connections are ready for the installation of the array.

- *Sun Storage 2500-M2 Arrays Regulatory and Safety Compliance Manual*
- *Sun Storage 2500-M2 Arrays Site Preparation Guide*

Related Documentation

Task	Title
Review safety information	*Sun Storage 2500-M2 Arrays Safety and Compliance Manual*
	Important Safety Information for Sun Hardware Systems
Review known issues and workarounds	*Sun Storage 2500-M2 Arrays Hardware Release Notes*
	Sun Storage Common Array Manager Release Notes
Prepare the site	*Sun Storage 2500-M2 Arrays Site Preparation Guide*
Install the array	*Sun Storage 2500-M2 Arrays Hardware Installation Guide*
Install the management software	*Sun Storage Common Array Manager Quick Start Guide*
	Sun Storage Common Array Manager Installation and Setup Guide
Configure host bus adapters	*Sun Storage Host Bus Adapter Configuration Guide*
Install multipath driver	*Sun StorageTek MPIO Device Specific Module Installation Guide, For Microsoft Windows OS*
	Sun StorageTek RDAC Multipath Failover Driver Installation Guide, For Linux OS
Manage the array	*Sun Storage Common Array Manager Array Administration Guide* and Online Help
	Sun Storage Common Array Manager CLI Guide
Troubleshooting and hardware replacement procedures	Service Advisor, launched from Sun Storage Common Array Manager

Documentation, Support, and Training

These web sites provide additional resources:

- Documentation
  http://www.oracle.com/technetwork/indexes/documentation/index.html
- Software licensing http://licensecodes.oracle.com/
- Support https://support.oracle.com
- Training https://education.oracle.com

CHAPTER 1

Installing Sun Storage 2500-M2 Arrays

This chapter describes the process of installing the Sun Storage 2500-M2 Arrays. It contains the following sections:

About Sun Storage 2500-M2 Trays

The Sun Storage 2540-M2 FC array, Sun Storage 2530-M2 SAS array, and the Sun Storage 2501-M2 array expansion tray are a family of storage products that provide high-capacity, high-reliability storage in a compact configuration.

The controller tray, with two controller modules, provides the interface between a data host and the disk drives. The Sun Storage 2540-M2 FC array provides a Fibre Channel (FC) connection between the data host and the controller tray. The Sun Storage 2530-M2 SAS array provides a Serial Attached SCSI (SAS) connection between the data host and the controller tray.

The Sun Storage 2500-M2 Arrays are modular, rack-mountable controller trays. The arrays are scalable from a single controller tray configuration to a maximum configuration of one controller tray and three additional expansion trays. One controller tray and three expansion trays creates a storage array configuration with a total of 48 drives.

The Sun Storage 2501-M2 array expansion tray provides additional storage. You can attach the expansion tray to either of the Sun Storage 2500-M2 Arrays. Controller trays and expansion trays can be installed in industry-standard cabinets.

Use Sun Storage Common Array Manager to manage the array. See Sun Storage Common Array Manager documentation for more information.

Caution – Possible hardware damage—To prevent electrostatic discharge damage to the tray, use proper antistatic protection when handling tray components.

Sun Storage 2500-M2 Controller Trays

Two types of controller trays are offered:

- Sun Storage 2540-M2 Fibre Channel (FC) Array
- Sun Storage 2530-M2 Serial Attached SCSI (SAS) Array

TABLE 1-1 describes the features of the FC and SAS controller trays.

TABLE 1-1 Sun Storage 2500-M2 Controller Tray Features

Sun Storage 2540-M2 FC Array	Sun Storage 2530-M2 SAS Array
Four 8Gbps Fibre Channel data host ports expandable to eight FC ports	Four 6Gbps SAS host ports
2-GB of cache	2-GB of cache
2U x 12 HDD (3.5″ SAS-2 Drives)	2U x 12HDD (3.5" SAS-2 drives)
300 GB15K or 600 GB15K Drives	300 GB15K or 600 GB15K drives
Maximum connection is 48 disk drives (one controller tray and three expansion trays)	Maximum connection is 48 disk drives (one controller tray and three expansion trays)
AC or DC power options	AC or DC powered options

Sun Storage 2501-M2 Expansion Tray

The expansion tray expands the capacity of a storage array. The controllers in the controller tray connect to the expansion tray and access the disk drives in the expansion tray for additional storage. An expansion tray contains both physical components (disk drives, input/output modules (IOMs), and power-fan modules) and logical components (virtual disks and volumes).

FIGURE 1-1 Sun Storage 2500-M2 Arrays Connection Example Using Fibre Channel

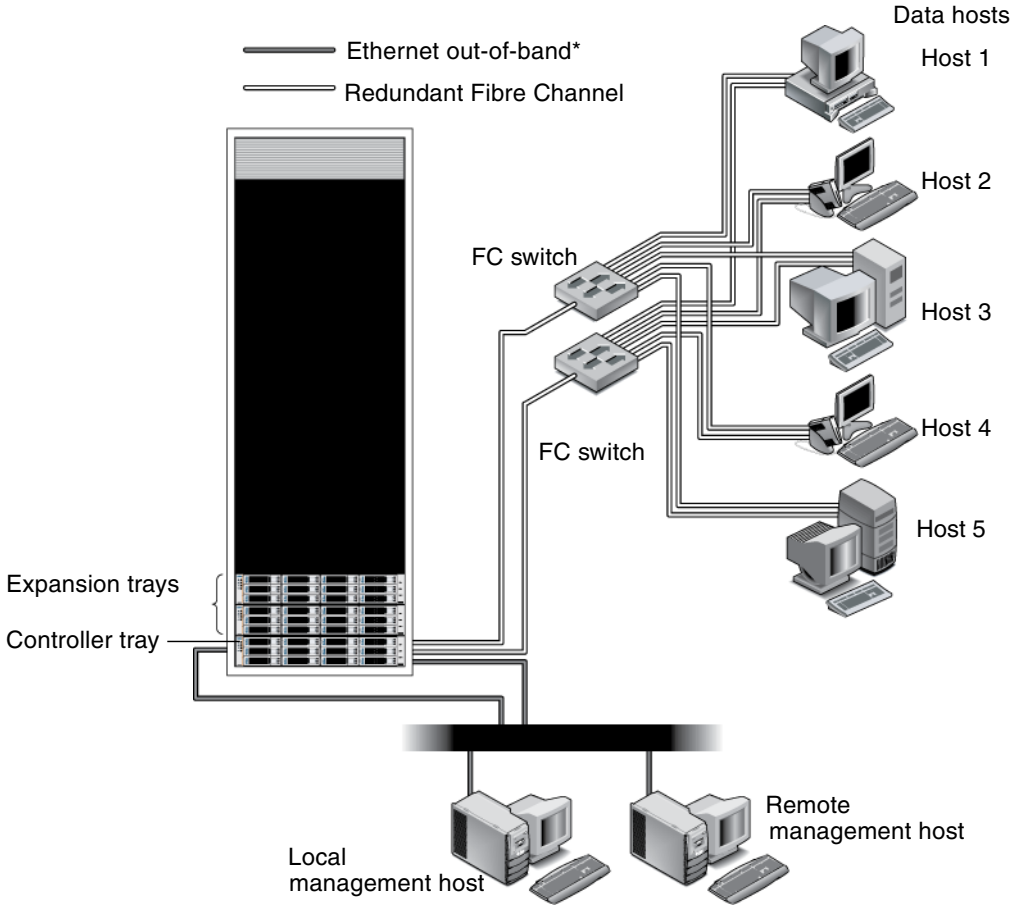

* In-band management is also supported.

Installation Tasks Checklist

TABLE 1-2 outlines the tasks required for installing Sun Storage 2500-M2 Arrays hardware and tells you where you can find detailed procedures. To ensure a successful installation, perform the tasks in the order in which they are presented.

Before you install the array, do the following:

- Read the *Sun Storage 2500-M2 Arrays Release Notes*
- Prepare the site as described in these books:
  - *Sun Storage 2500-M2 Arrays Regulatory and Safety Compliance Manual*
  - *Sun Storage 2500-M2 Arrays Site Preparation Guide*

The *Sun Storage 2500-M2 Arrays Site Preparation Guide* has information about the physical dimensions of the trays as well as the service clearance and the power requirements of the cabinet. This document should be used to prepare your site layout prior to the installation.

TABLE 1-2 Sun Storage 2500-M2 Arrays Hardware Installation Checklist

Step	Task	Where to Find Procedure
1.	Unpack the cabinet and move it into position.	Unpacking guide attached to the outside of the shipping carton
2.	Install and secure the cabinet.	Installation instructions for industry standard cabinet
3.	Attach the rails to the cabinet.	"Installing Adjustable Support Rails" on page 20
4.	Mount the controller tray and expansion trays in the cabinet.	"Installing Controller and Expansion Trays" on page 23
5.	Cable the controller tray and expansion trays.	"Connecting the Controller Tray to Expansion Trays" on page 24
6.	Connect the management host and data hosts.	"Configuring Out-of-Band Management" on page 31 "Configuring In-Band Management" on page 32 "Connecting Data Hosts" on page 33
7.	Turn on the power.	"Powering On the Array" on page 42

When the tasks in TABLE 1-2 are complete, you can install Sun Storage Common Array Manager on an external management host, install and upgrade firmware from the management host, and perform initial array setup and system configuration. See the *Sun Storage Common Array Manager Installation and Setup Guide* for information on software-related tasks.

Controller Tray and Expansion Tray Components

Sun Storage 2500-M2 Arrays consist of one or more controller trays and up to three expansion trays.

Controller Tray and Expansion Tray Front-Access Components

Components that you access through the front of the Sun Storage 2540-M2 FC array and Sun Storage 2530-M2 SAS array are identical in appearance.

Caution – Electrical grounding hazard—This equipment is designed to permit the connection of the DC supply circuit to the earthing conductor at the equipment.

Note – Each tray in the storage array must have a minimum of two drives for proper operation. If the tray has fewer than two drives, a power supply error is reported.

- The top of the controller tray is the side with labels.
- The configuration of the host ports might appear different on your system, depending on which host interface card configuration is installed.

FIGURE 1-2 Front-Access Components on the Controller Tray and the Expansion Tray

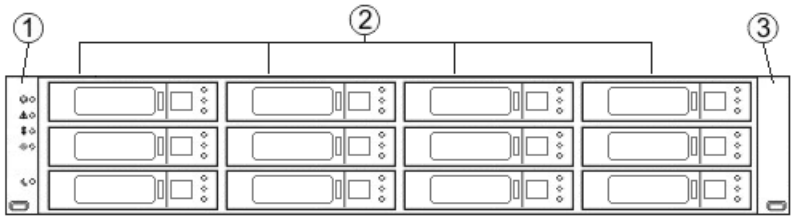

1	Left end cap with LEDs	**3**	Right end cap
2	Drives		

Controller Tray Rear-Access Components

FIGURE 1-3 describes the components that you access from the rear of the Sun Storage 2540-M2 Arrays controller trays include.

FIGURE 1-3 2540-M2 FC Controller Tray, Rear-Access Components

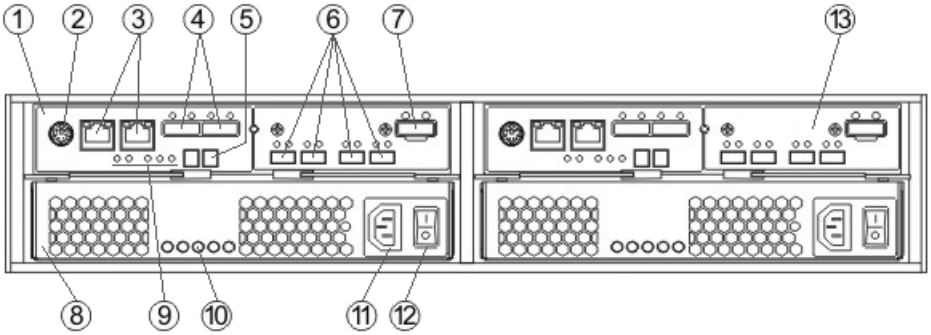

1	Controller module A	**8**	Power-fan module
2	Serial port	**9**	Controller module LEDs
3	Ethernet ports	**10**	Power-fan module LEDs
4	SAS host ports (Not for use and not supported on 2540-M2)	**11**	Power connector
5	7-Segment display	**12**	Power switch
6	FC host ports (Not available on 2530-M2)	**13**	Controller module B
7	SAS expansion port		

FIGURE 1-4 2530-M2 SAS Controller Tray, Rear Access Components

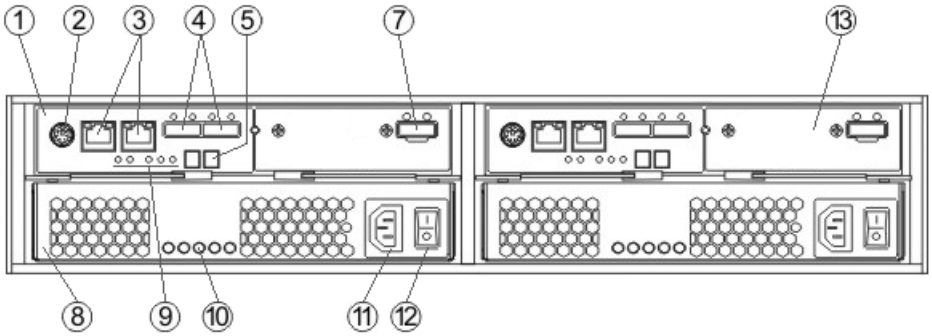

Expansion Tray Rear-Access Components

The following figures describe the components that you access from the rear of the Sun Storage 2501-M2 array expansion tray. Each expansion tray can contain a maximum of twelve 3.5-in. (8.89-cm) drives.

FIGURE 1-5 shows the AC power option and FIGURE 1-6 shows the DC power option.

FIGURE 1-5 2501-M2 Expansion Tray Rear-Access Components—AC Power Option

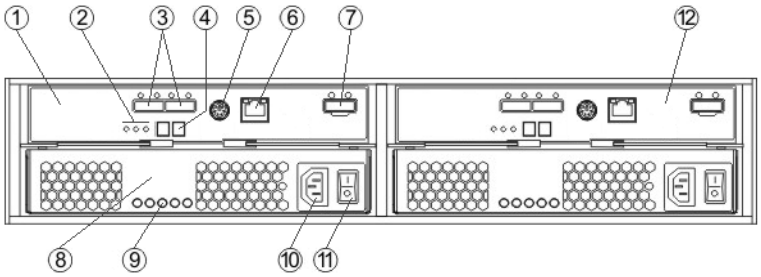

1	IOM A	**7**	SAS expansion port
2	IOM LEDs	**8**	Power-fan module
3	SAS IN ports	**9**	Power-fan module LEDs
4	7-Segment display (see "Expansion Tray 7-Segment Display" on page 58)	**10**	Power connector (AC or DC)
5	Serial port	**11**	Power switch (AC or DC)
6	Ethernet port	**12**	IOM B

FIGURE 1-6 2501-M2 Expansion Tray Rear-Access Components—DC Power Option

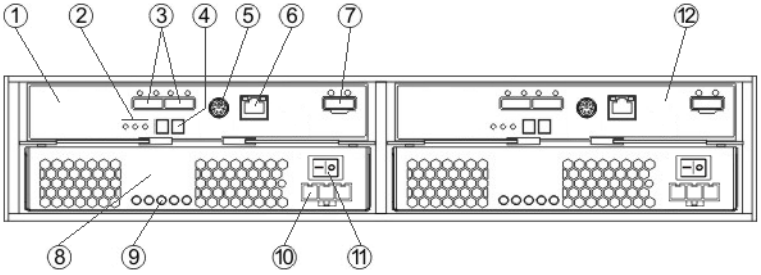

Important Information About DC Power Option

You can order an optional DC power supply connection and connector cables for the drive tray. A qualified service person is required to make the DC power connection per NEC and CEC guidelines. A two-pole, 30-amp circuit breaker is required between the DC power source and the drive tray for over-current and short-circuit protection. Before turning off any power switches on a DC-powered expansion tray, you must disconnect the two-pole, 30-amp circuit breaker.

Caution – Risk of electrical shock—This unit has more than one power source. To remove all power from the unit, all DC MAINS must be disconnected by removing all power connectors from the power supplies.

Controller Tray Host Ports

FIGURE 1-7 Sun Storage 2530-M2 Array SAS Ports—Rear View

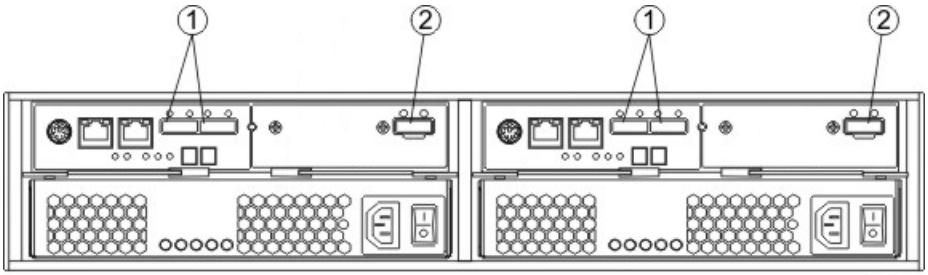

1	SAS host ports	**2**	SAS expansion port

FIGURE 1-8 Sun Storage 2540-M2 Arrays FC Ports—Rear View

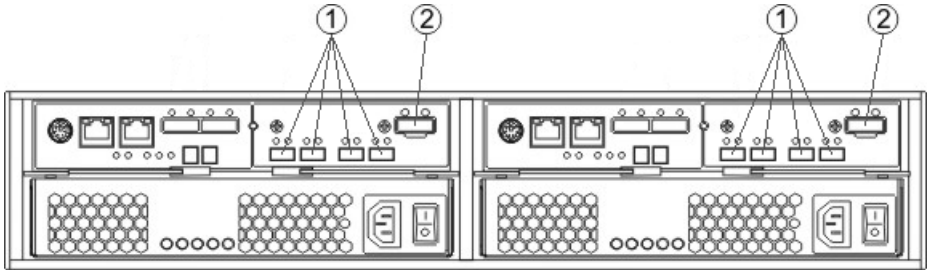

1	FC host ports	**2**	SAS expansion port

Note – Four Small Form-factor Pluggable (SFP) transceivers are shipped with the Sun Storage 2540-M2 FC controller tray, providing support for two FC ports per controller module, or four FC ports per controller tray.

Note – The SAS host ports on the 2540-M2 FC controller tray are not for use and not supported.

SFP Transceivers

The controller tray supports Fibre Channel (FC) and SAS drive connections. FC host connections can operate at 8 Gb/s or at a lower data rate. Ports for 8-Gb/s Fibre Channel host connections require SFP transceivers designed for this data rate. These SFP transceivers look similar to other SFP transceivers but are not compatible with other types of connections.

Note – The SFP transceiver shown might look different from those that are shipped with your controller tray. The difference does not affect transceiver performance.

Caution – Risk of exposure to laser radiation—Do not disassemble or remove any part of a Small Form-factor Pluggable (SFP) transceiver because you might be exposed to laser radiation.

FIGURE 1-9 SFP Transceiver for the Sun Storage 2540-M2 FC Array

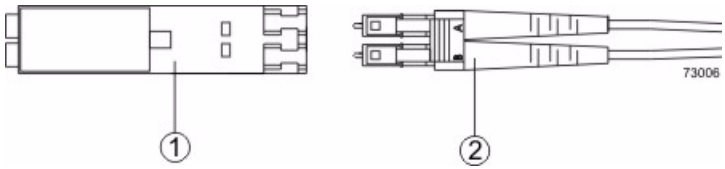

1 Active SFP transceiver	**2** Fiber-optic cable

Note – On the Sun Storage 2530-M2 controller tray, each controller module has a pair of levers with handles for removing the component from the tray. One of these handles on each controller module is located next to a host port. The close spacing between the handle and the host port might make it difficult to remove a cable that is attached to the host port. If this problem occurs, use a flat-blade screwdriver to push in the release component on the cable connector.

Power-Fan Modules

The power-fan module for the Sun Storage 2540-M2 FC array, Sun Storage 2530-M2 SAS array, and Sun Storage 2501-M2 array expansion tray is identical and interchangeable.

Note – A minimum of two disk drives must be operating in a controller tray or in an expansion tray to avoid generating a power-fan module error.

The power-fan module contains an integrated cooling fan. The power supply provides power to the internal components by converting incoming AC voltage to DC voltage. The fan circulates air inside of the tray by pulling air in through the vents on the front of the module and pushing the air out of the vents on the back of each fan.

Each tray contains two power-fan modules. If one power supply is turned off or malfunctions, the other power supply maintains electrical power to the tray. Likewise, the fans provide redundant cooling. If one of the fans in either fan housing fails, the remaining fan continues to provide sufficient cooling to operate the tray. The remaining fan runs at a higher speed until the failed fan is replaced. Replace the failed fan as soon as possible.

Expansion Tray IOM

The expansion tray contains two input/output modules (IOMs) that provide the interface between the disk drives in the expansion tray and the controllers in the controller tray. Each controller module in the controller tray connects to an IOM.

If one IOM fails, the other IOM provides a redundant data path to the disk drives. You can replace a failed IOM while the power to the storage array is turned on and the storage array is processing data (a hot swap).

For IOM replacement procedures, see the Service Advisor feature of Sun Storage Common Array Manager.

Service Action LEDs

Each controller, power-fan module, IOM, and disk drive has a Service Action Allowed LED. The Service Action Allowed LED indicates when you can remove a component safely.

For a description of each LED, see:

- "LED Symbols and General Behavior" on page 45
- "Disk Drives LEDs" on page 48
- "Controller Tray and Expansion Tray LEDs" on page 49

Caution – Potential loss of data access—Never remove a power-fan module, a controller module, or a disk drive unless the Service Action Allowed LED is turned on or you are given specific instructions to do so by the Service Advisor feature of the Sun Storage Common Array Manager.

If a CRU or module fails and must be replaced, the Service Action Required LED on that module turns on to indicate that a service action is required. The Service Action Allowed LED turns on if it is safe to remove the CRU or module. If there are data availability dependencies or other conditions that dictate that a CRU or module should not be removed, the Service Action Allowed LED remains off.

The Service Action Allowed LED automatically turns on or turns off as conditions change. In most cases, the Service Action Allowed LED turns on when the Service Action Required (Fault) LED is turned on for a CRU or module.

Note – If the Service Action Required (Fault) LED is turned on but the Service Action Allowed LED is turned off for a particular CRU or module, you might have to service another component first. Check the Service Advisor feature of Sun Storage Common Array Manager to determine the action you should take.

Disk Drives

Controller trays or expansion trays hold up to 12 disk drives, for a maximum of 48 disk drives in a storage array. To reach the maximum of 48 disk drives, the storage array must consist of one controller tray and three expansion trays.

Access to disk drives is from the front of the tray.

Disk drives can be mixed, provided you adhere to these additional rules:

- Use the same drive types within a virtual disk
- Assign hot spares to cover any disk drive failure

FIGURE 1-10 Disk Drives

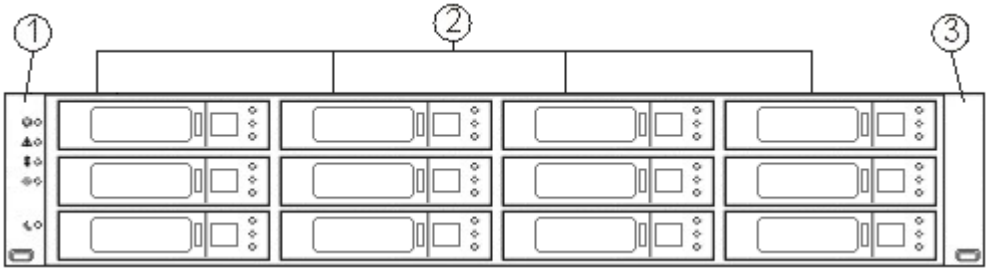

Refer to the release notes for your array for supported drives.

1	Left end cap (with drive tray LEDs)	**3**	Right end cap
2	Drives		

Disk drives for the Sun Storage 2500-M2 Arrays have three components:

- Hard drive
- Hard drive carrier
- Adapter card for connecting the disk drive to the mid-plane

The physical locations of the disk drives are numbered 1 through 12, from left to right, and from top to bottom. The right end cap has numbers on the side showing the numbers of the adjacent drives. The Service Advisor feature of Sun Storage Common Array Manager automatically detects a disk drive's tray ID and slot designation.

Array Management Software

The Sun Storage 2500-M2 Arrays are managed by Sun Storage Common Array Manager. The array management software provides:

- Web browser–based management and configuration from an external management host
- Data host software that controls the data path between the data host and the array
- Remote command-line interface (CLI) client that provides the same control and monitoring capability as the web browser, and is scriptable for running frequently performed tasks
- Service Advisor, an online reference of hardware and software configuration and troubleshooting information and procedures.

For information about installing the array management software and configuring and managing the array, see the *Sun Storage Common Array Manager Installation and Setup Guide* and the *Sun Storage Common Array Manager Administration Guide*.

Service Advisor and CRUs

Note – The replaceable components inside the controller tray or expansion tray are referred to as either customer replaceable units (CRUs) or as modules.

The majority of replaceable units are designed to be replaceable by customers.

To see a list of the hardware components that can be replaced at the customer site, refer to Service Advisor in Sun Storage Common Array Manager.

The Service Advisor also provides procedures for replacing array components.

CHAPTER 2

Installing Switches and HBAs

This chapter provides guidelines for installing FC switches and host bus adapters. It contains the following sections:

Installing and Configuring Switches

About Switches for Sun Storage 2500-M2 Arrays

- Most of the switches, as shipped from the vendor, require an update to their firmware to work correctly with the storage array.
- Refer to the switch's documentation for information about how to install the switch and how to use the configuration utilities that are supplied with the switch.
- If required, make the appropriate configuration changes for *each* switch that is connected to the storage array.

Installing Switches

1. **Install your switch according to the vendor's documentation.**
2. **Refer to the** *Sun Storage 2500-M2 Arrays Release Notes* **to obtain this information:**
   - Current hardware compatibility information
   - Models of the switches that are supported

- Firmware requirements and the software requirements for the switches

3. **Update the switch's firmware by accessing it from the applicable switch vendor's website.**

   This update might require that you cycle power to the switch.

Installing and Configuring HBAs

About Host Bus Adaptors for Sun Storage 2500-M2 Arrays

- For the best performance, HBAs for SAS and FC connections should support the highest data rate supported by the HICs to which they connect.
- For maximum hardware redundancy, you must install a minimum of two HBAs (for either SAS or FC host connections) in each host. Using both ports of a dual-port HBA or a dual-port NIC provides two paths to the storage array but does not ensure redundancy if an HBAfails.
- Refer to the *Sun Storage 2500-M2 Arrays Release Notes* **for** information about the supported models of the HBAs and their requirements.
- Most of the HBAs, as shipped from the vendor, require updated firmware and software drivers to work correctly with the storage array. For information about the updates, refer to the website of the HBA vendor.

Installing Host Bus Adapters

1. **Check the** *Sun Storage 2500-M2 Arrays Release Notes* **to be sure you have a supported configuration.**
2. **Install your HBA according to the vendor documentation.**
3. **Install the latest version of the firmware for the HBA. You can find the latest version of the firmware for the HBA at the HBA vendor website.**
4. **Reboot or start your host.**
5. **While your host is booting, look for the prompt to access the HBA BIOS utility.**
6. **Select each HBA to view its HBA host port World Wide Name (WWN).**

7. **Record the following information for each host and for each HBA connected to the storage array. A label is important if you need to disconnect cables for any reason. Include the following information:**
   - Name of each host
   - HBAs in each host
   - HBA host port World Wide Name (WWN) of each port on the HBA

   The following table shows examples of the host and HBA information that you need to record.

TABLE 2-1 Examples of HBA Host Port World Wide Names

Host Name	Associated HBAs	HBA Host Port WWN
ENGINEERING	Vendor x, Model y (dual port)	37:38:39:30:31:32:33:32 37:38:39:30:31:32:33:33
	Vendor a, Model y (dual port)	42:38:39:30:31:32:33:42 42:38:39:30:31:32:33:44
FINANCE	Vendor a, Model b (single port)	57:38:39:30:31:32:33:52
	Vendor x, Model b (single port)	57:38:39:30:31:32:33:53

Configuring Host Bus Adapters

For information about how to configure operating system (OS), failover driver, and host bus adapter (HBA) settings for Fibre Channel (FC) and SAS protocols, see the *Sun Storage Host Bus Adapter Configuration Guide*.

CHAPTER 3

Installing Trays

Use the procedures in this chapter to install controller and expansion trays in an industry-standard cabinet. The number of trays you need to install depends on your overall storage requirements. You can install a maximum of four trays, one controller tray and up to three expansion trays for each array.

Preparing for Installation

Prerequisite: Refer to the *Sun Storage 2500-M2 Site Preparation Guide* for important considerations about cabinet installation.

Check the following cabinet requirements:

1. Cabinet is in the final location.
2. Cabinet installation site meets the clearance requirements.
   - Front clearance: 30 in. (76 cm)
   - Back clearance: 24 in. (61 cm)
3. Lower the feet on the cabinet, if required, to keep it from moving.
4. Combined power requirements of the trays do not exceed the power capacity of your cabinet.

Note – The power supplies meet standard voltage requirements for both domestic and worldwide operation.

Installing Adjustable Support Rails

This procedure describes how to install adjustable support rails for Oracle's Sun Storage 2500-M2 array hardware.

The adjustable support rail kit includes these parts:

- Eight large screws for mounting the support rails and the front of the tray to the cabinet
- Eight washers for the large screws
- Eight large spacers for cabinets with square holes (Note: Small spacers for round holes come pre-installed in the rails)
- Two small screws for securing the rear of the tray to the support rails

Preparing to Install the Support Rails in the Cabinet

FIGURE 3-1 shows how the support rails are positioned inside the cabinet. Note the following clearance requirements:

- If you are installing the support rails above an existing tray, position the rails directly above the tray.
- If you are installing the support rails below an existing tray, allow 3.5 in. (8.8 cm) clearance for 2U controller tray or expansion tray units.

FIGURE 3-1 Positioning the Support Rails in the Cabinet—Front View

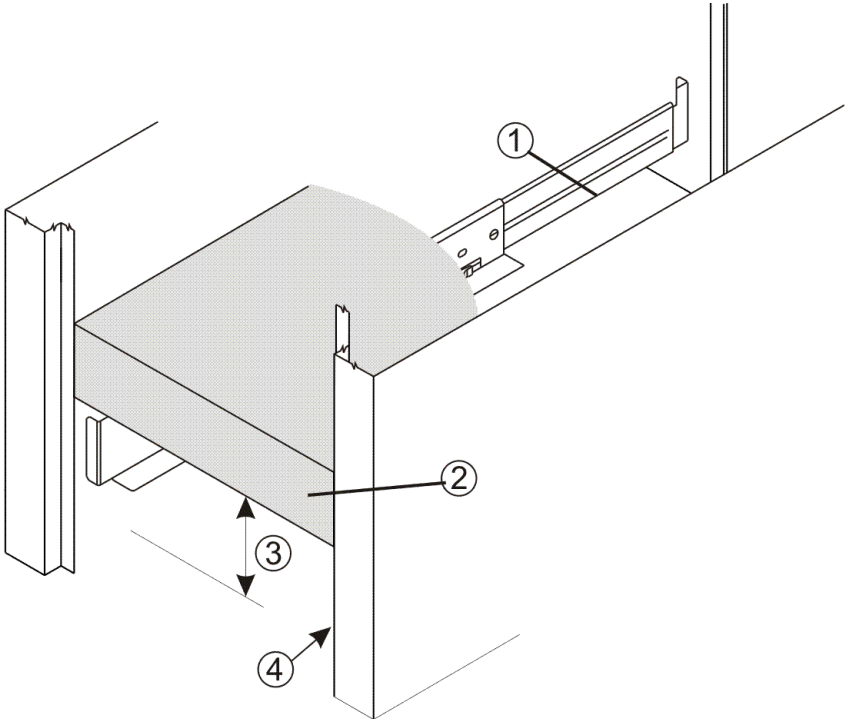

1	Support rail	**3**	Clearance below the existing tray 3.5 in. (8.8 cm)
2	Existing tray	**4**	Industry standard cabinet

Attaching the Support Rails to the Cabinet

FIGURE 3-2 Attaching the Support Rails to the Cabinet

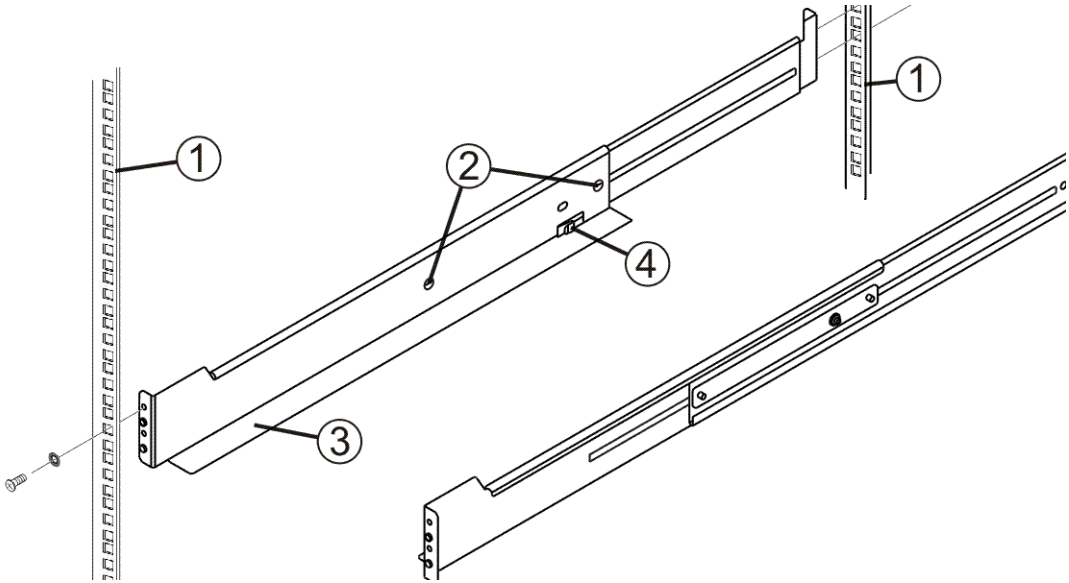

1	Cabinet mounting holes	**3**	Support rails
2	Adjustment screws for locking the support rail length	**4**	Clip for securing the rear of the tray

1. **If desired, use alignment spacers on the flanges of the mounting rails.**

   The alignment spacers are designed to fit into the mounting holes in the cabinet and help position and hold the mounting rails. Each support rail comes with two spacers in the front bracket and two spacers in the rear bracket.

   - If the cabinet has round holes, use the pre-installed small spacers on the front and rear of the support rail.
   - If the cabinet has square holes, replace the small spacers on the front and rear of the support rail with the large spacers that come with the rail kit.

2. **Be sure the adjustment screws on the support rail are loose so you can extend or contract the support rail as needed.**

3. **Place the support rail inside the cabinet and extend the support rail until its flanges touch the inside of the cabinet.**

4. **Insert one large screw through the front of the cabinet and screw into the upper captured nut in the support rail. If needed, add a washer between the screw and the cabinet rail. Tighten the screw.**

Note – Do not insert a screw into the front lower captured nut at this time. This captured nut is used for tray installation.

---

5. **Insert two large screws through the rear of the cabinet and screw into the upper and lower captured nuts in the rear flange in the support rail. If needed, add a washer between each screw and the cabinet rail. Tighten the screws.**
6. **Tighten the adjustment screws on the support rail.**
7. **Repeat** Step 1 **through** Step 6 **for the second support rail.**

Installing Controller and Expansion Trays

When installing trays, distribute tray weight evenly within the cabinet. One approach is to install the controller tray in the middle portion of the cabinet while allowing room for expansion trays to be placed above and below the controller tray.

Caution – Risk of bodily injury—If the bottom half of the cabinet is empty, do not install components in the top half of the cabinet. If the top half of the cabinet is too heavy for the bottom half, the cabinet might fall and cause bodily injury. Always install a component in the lowest available position in the cabinet.

---

1. **Install a pair of mounting rails in the cabinet for each controller tray and expansion tray (see** "Installing Adjustable Support Rails" on page 20**).**

Caution – Possible hardware damage—To prevent electrostatic discharge damage to the tray, use proper antistatic protection when handling tray components.

---

2. **Using two people, carefully lift and rest the tray on the bottom left and right rails.**

Caution – Risk of bodily injury—A fully loaded controller tray weighs approximately 60 lbs (27 kg). Two people are required to safely lift the component.

---

3. **Carefully slide the tray into the cabinet until the front mounting flanges on the tray touch the vertical face of the cabinet and the rear edges of the tray fit into the clips on the support rails. The tray is correctly aligned when these conditions are met:**
   - The middle mounting holes on the front flanges of the tray align with the mounting holes on the front of the mounting rails.
   - The rear edge of the tray sheet metal fits into the clip on the mounting rail.
   - The holes in the tray sheet metal for the rear hold-down screws align with the captured nuts in the side of the mounting rails.
4. **Secure the front of the tray to the cabinet by inserting a screw through the center hole in each front mounting flange. If you used a washer for the top mounting rail screw, insert a washer between the mounting flange and the cabinet rail. Tighten the screws.**
5. **Secure the rear side of the tray to each mounting rail by inserting one screw through the side sheet metal of the tray into the captured nut on the mounting rail. Tighten the screw.**
6. **Replace the end caps that cover the mounting flanges on the front of the tray.**
7. **Verify that the tray power switches and cabinet circuit breakers are turned off.**
8. **Connect each tray power supply to a separate power source in the cabinet.**

Connecting the Controller Tray to Expansion Trays

- Each expansion tray can contain a maximum of twelve drives.
- The maximum number of drive slots in the storage array is 48.
- The IOMs in an expansion tray contain two sets of In ports and one set of Out ports.
- Each controller module has one dual-ported SAS expansion port to connect to the expansion trays.
- To maintain data access in the event of the failure of a controller, an IOM, or a drive channel, you must connect an expansion tray or a string of expansion trays to both drive channels on a redundant path pair.

FIGURE 3-3 Drive Channel Ports on the Controller Tray

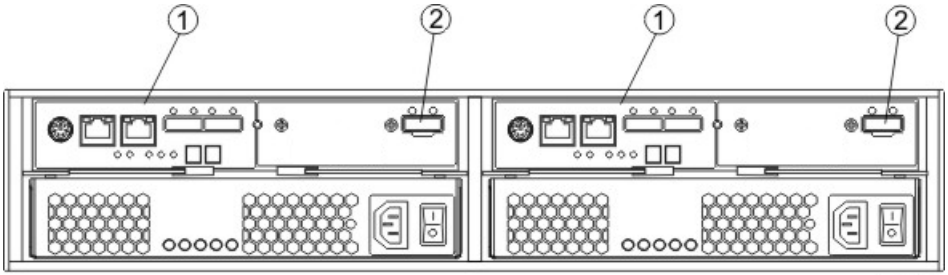

1	Controller module	**2**	SAS expansion port

FIGURE 3-4 Expansion Tray Ports—Rear View

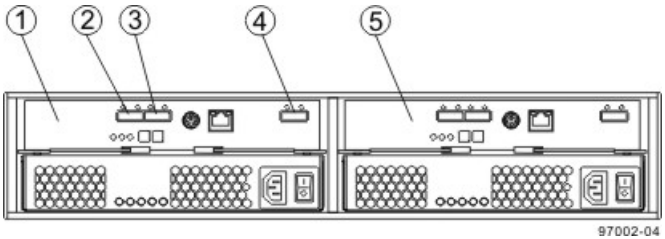

1	IOM A	**4**	SAS expansion port (Out)
2	SAS port 1 (In)	**5**	IOM B
3	SAS port 2 (In)		

Drive Cabling Configurations

Use the following recommended cabling diagrams for one controller tray and one, two, or three expansion trays.

FIGURE 3-5 Controller Tray Above the Expansion Tray

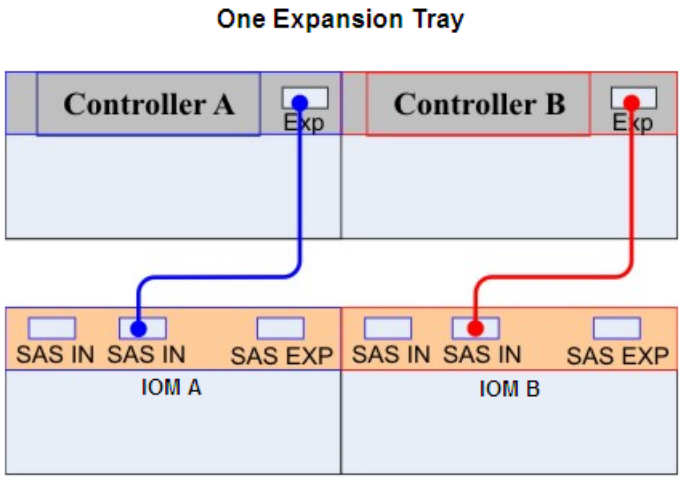

FIGURE 3-6 Controller Tray Between Two Expansion Trays

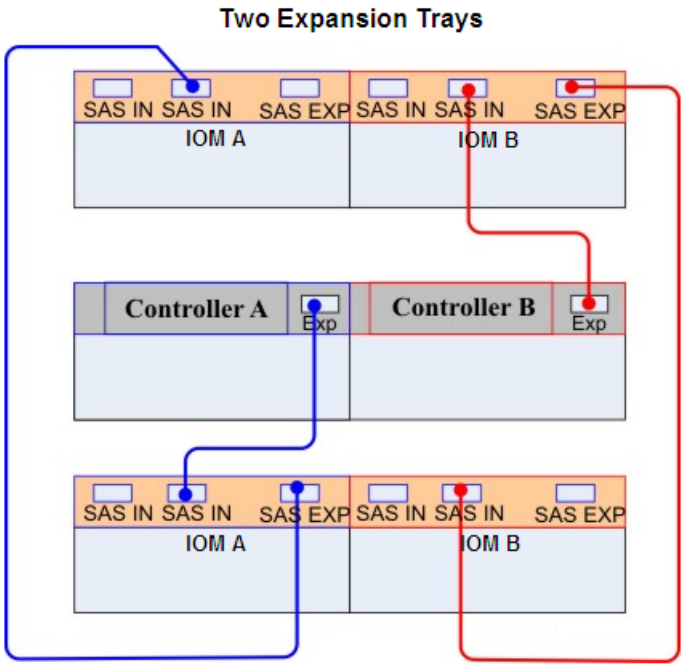

FIGURE 3-7 Controller Tray with Three Expansion Trays

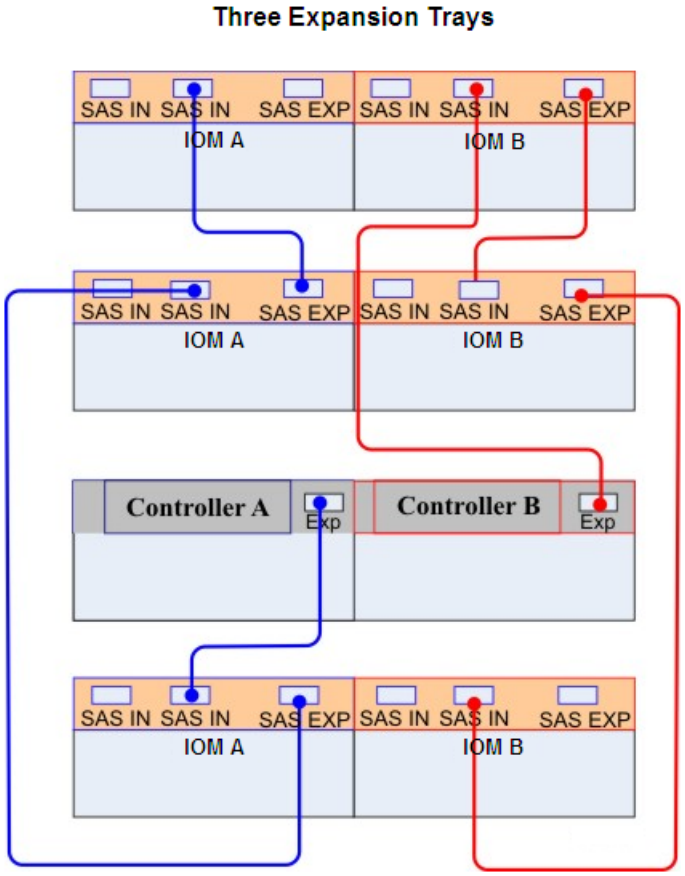

Connecting Expansion Trays

1. Use the following table to determine the number of SAS cables that you need:

TABLE 3-1 Expansion Tray Cabling

Number of Expansion Trays	Number of Cables Required
1	2
2	4
3	6

2. **If there is a black, plastic plug in the SAS expansion port on the controller, remove it.**

3. **Insert one end of the cable into the SAS expansion port on the controller into slot A of the controller tray.**

4. **Insert the other end of the cable into the port with an up arrow on the IOM into slot A of the expansion tray.**

5. **Are you adding more expansion trays?**
   - Yes – Go to Step 6.
   - No – Go to Step 9.

Note – Each IOM in an expansion tray has three SAS expansion ports: two on the left-center of the IOM and one on the upper-right side. When connecting from an IOM in one expansion tray to an IOM in another expansion tray, connect the port on the upper-right to one of the ports on the left-center. The following figure shows these arrows on an IOM. If the cable is connected either between the two left-center IOM ports or between two upper-right IOM ports, communication between the two expansion trays is lost.

Note – It does not matter which of the two left-center IOM ports you use to connect to the SAS expansion port on the far-right side.

FIGURE 3-8 Connecting a Cable from One IOM to a Second IOM

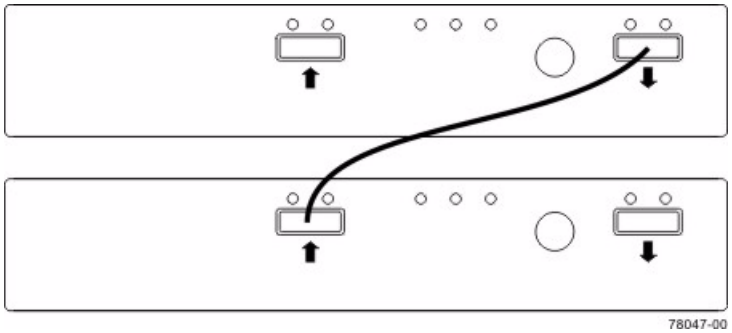

6. **In the IOM of the first expansion tray, insert one end of the cable into the port on the far-right side.**

7. **In the IOM of the next expansion tray, insert the other end of the cable into one of the ports in the left-center of the IOM.**

8. **Repeat** Step 6 **and** Step 7 **for each expansion tray that you add to the storage array.**

9. **To each end of the cables, attach a label with this information:**
   - Controller ID (for example, controller A)
   - IOM ID (for example, IOM A)
   - IOM port (In or Out)
   - Expansion tray ID

   For example, if you are connecting controller A to the In port on IOM A in expansion tray 1, the label on the controller end of the cable will have this information:

   ```
   CtA-Dch1, Dm1-IOM_A (left), In - Controller End
   ```

   The label on the expansion tray end of the cable will have this information:

   ```
   Dm1-IOM_A (left), In, CtrlA
   ```

10. **Repeat** Step 2 **through** Step 9 **for the controller in slot B in the controller tray.**

Note – To connect cables for maximum redundancy, the cables attaching controller B must be connected to the expansion trays in the opposite tray order as for controller A. That is, the last expansion tray in the chain from controller A must be the first expansion tray in the chain from controller B.

CHAPTER 4

Connecting Hosts

This chapter describes how to connect a management host and data hosts to Sun Storage 2500-M2 Arrays. It contains the following sections:

Configuring Out-of-Band Management

Caution – Risk of security breach—Connect the Ethernet ports on the controller tray to a private network segment behind a firewall. If the Ethernet connection is not protected by a firewall, your storage array might be at risk of being accessed from outside of your network.

About Out-of-Band Management

Out-of-band management is a method to manage a storage array in which a storage management station sends commands to the storage array through the Ethernet connections on the controller.

- The Ethernet connections are intended for out-of-band management.

Note – Ethernet port 2 on each controller is reserved for the support representative.

- In limited situations in which the management host is connected directly to the controller tray, you must use an Ethernet crossover cable. An Ethernet crossover cable is a special cable that reverses the pin contacts between the two ends of the cable.

Connecting Cables for Out-of-Band Management

Perform these steps to connect Ethernet cables for out-of-band management. If you use only in-band management, skip these steps.

1. **Connect one end of an Ethernet cable into the Ethernet port 1 on controller A.**

Note – Use only Ethernet port 1 to connect to a management host. Ethernet port 2 is reserved for the support representative.

---

2. **Connect the other end to the applicable network connection.**
3. **Repeat** Step 1 **and** Step 2 **for controller B.**

Configuring In-Band Management

About In-Band Management

An in-band connection uses the data path between the array and host for management traffic. In-band communicates the management and control commands on the same path as the data being processed. You configure in-band management using a Fibre Channel (FC) connection between a data host and the array.

Connecting Cables for In-Band Management

1. **Install CAM software on at least one of the network-attached hosts. See the** *Sun Storage Common Array Manager Installation and Setup Guide* **for installation instructions.**
2. **Connect two in-band FC cables between HBAs on the data host and the array (one cable to each controller). You can connect the data host HBAs directly to the array or through FC switches.**

Note – Sun Storage Common Array Manager supports Solaris Sparc and x86, Windows, and Linux platforms for in-band management. For Red Hat Enterprise Linux OS, Release 5.1 or higher is required. Check the *Sun Storage Common Array Manager Release Notes*, for the latest list of packages to install.

3. **Refer to "Configuring In-Band Management for RAID Arrays," in the** *Sun Storage Common Array Manager Installation and Setup Guide* **for information about installing the RAID Proxy Agent.**

Connecting Data Hosts

Data transmission between the host and the controllers in the array is through Fibre Channel (FC) or Serial Attached SCSI (SAS) cables. SAS connections from the host to the **contro**llers are direct connections, and FC connections are direct or through a FC switch.

About Host Ports

Caution – Possible hardware damage—To prevent electrostatic discharge damage to the tray, use proper antistatic protection when you handle tray components.

Each controller tray has from four or eight host ports.

- Sun Storage 2530-M2 array has four SAS-2 host ports (two per controller module) supporting 6-Gb/s data rates.
- Sun Storage 2540-M2 array has eight Fibre Channel host ports (four per controller module) supporting 8-Gb/s data rates. Four SFP transceivers are provided in the ship kit.

Note – The SAS host ports on the 2540-M2 FC controller tray are not for use and not supported.

FIGURE 4-1 FC Host Ports on the Controllers—Rear View

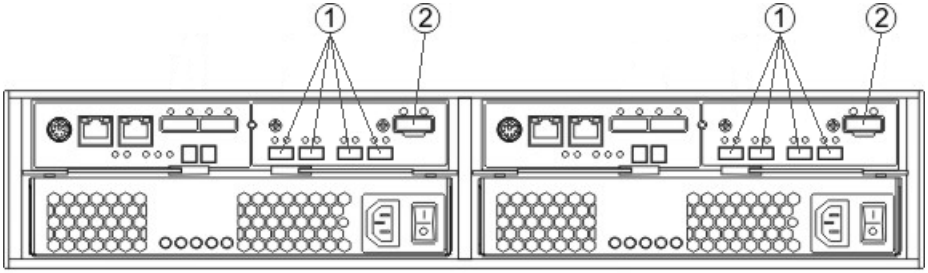

Note – The SAS host ports on the 2540-M2 FC controller tray are not for use and not supported.

FIGURE 4-2 SAS Host Ports on the Controllers—SAS

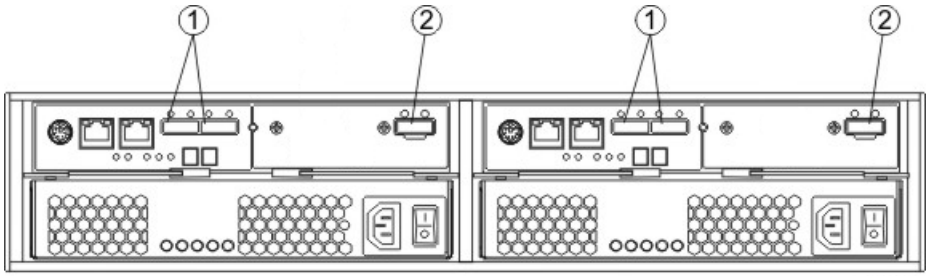

1 SAS host ports	**2** Expansion port

Caution – Risk of exposure to laser radiation—Do not disassemble or remove any part of a Small Form-factor Pluggable (SFP) transceiver because you might be exposed to laser radiation.

Connecting Host Cables to a Controller Tray

Before Connecting the Host Cables

- Be sure that you have installed the HBAs. Refer to the documentation for the HBAs for information about how to install the HBA and how to use the supplied configuration utilities.
- The type of controller host interface (SAS or FC) must match the type of the host bus adapters (HBAs) to which you connect them."
- **Connections for SAS use copper cables and do not require SFP transceivers.**
- See FIGURE 4-3 through FIGURE 4-5 for sample cabling patterns.

Connecting the Host Cables

1. **Decide which of these steps to begin with:**
   - If you have a FC interface—Go to Step 2.
   - If you have a SAS interface — Go to Step 4.
2. **Be sure that the appropriate type of SFP transceiver is inserted into the host channel.**
3. **If a black, plastic plug is in the SFP transceiver, remove it.**
4. **Perform one of these actions:**
   - If you have a FC interface—Starting with the first host port of each controller, plug one end of the cable into the SFP transceiver in the host port.
   - If you have a SAS interface—Starting with the first host port of each controller, plug one end of the cable into the host port.

Note – The cable is either a SAS cable or a fiber-optic cable for FC connections.

FIGURE 4-3 Sample Cabling for One Host, Direct Topology

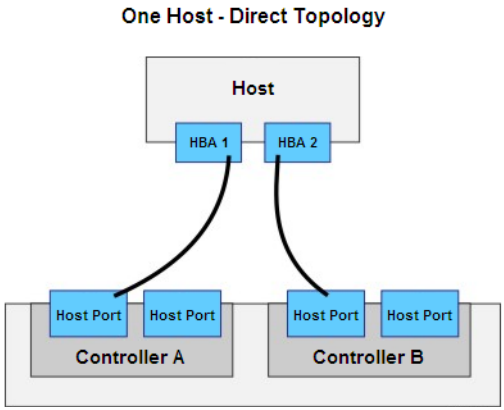

FIGURE 4-4 Sample Cabling for Two Hosts, Direct Topology

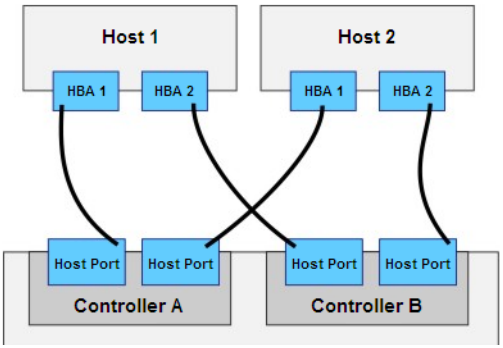

FIGURE 4-5 Sample Cabling for Two Hosts, FC Switch Topology

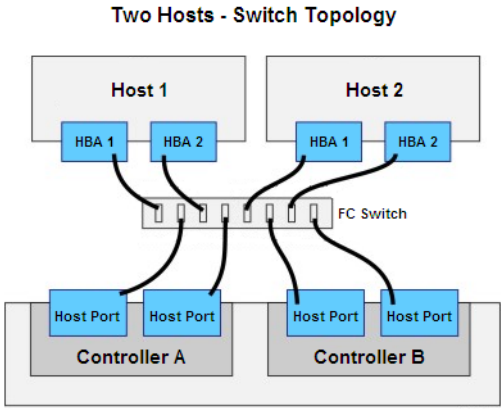

5. **Plug the other end of the cable either into an HBA in the host (direct topology) or into a FC switch topology.**

Note – The SAS host interface does not support a switch topology.

---

6. **Affix a label to each end of the cable with this information. A label is important if you need to disconnect cables to service a controller. Include this information on the labels:**
   - Host name and the HBA port (for direct topology)
   - Switch name and the port (for FC switch topology)
   - Controller ID (for example, controller A)
   - Host channel ID (for example, host channel 1)

   Example label abbreviation: Assume that a cable is connected between port 1 in HBA 1 of a host named Engineering and host channel 1 of controller A. A label abbreviation could be as follows.

```
Heng-HBA1/P1, CtA-Hch1
```

Data Host Multipathing Software

Install data host software (including multipathing) on each data host that communicates with Sun Storage 2500-M2 Arrays. The multipathing software you need depends on the host platform, HBA, and the data transport (SAS or FC) in your storage area network. See the *Sun Storage 2500-M2 Arrays Hardware Release Notes* for the latest supported versions.

The data host multipathing software for Red Hat Linux, HP-UX, AIX, and Windows platforms is Sun Redundant Dual Array Controller (RDAC), also known as MPP.

Multipathing is included in the Solaris 10 OS. For Solaris 9 data hosts, you need the SAN Foundation Kit software (which includes the multipathing software).

You can download multipathing software from:

https://support.oracle.com/

For software and patch download procedures, see *Sun Storage Common Array Manager Installation and Setup Guide*.

CHAPTER 5

Powering On the Array

This chapter describes initial tray power-on procedures in the following sections:

Before Powering On

Decide on an IP address method before powering on.

- The controllers will obtain IP addresses from DHCP if it is available on the network.
- If DHCP is not available, the controller tray defaults to internal static IP addresses. (See the *Sun Storage Common Array Manager Software Installation and Setup Guide* for information about configuring IP addresses on controller modules.)
- For instructions on configuring IP addresses on the controllers using the serial interface, see "Configuring the IP Address of the Controller Modules" on page 62.
- For an example of how to set up the DHCP server, see "Configuring a DHCP Server" on page 69.

Connecting Power Cables

The controller tray and the expansion tray can have either standard power connections to an AC power source or the optional connections to a DC power source (–48 VDC).

Note – Do not turn on the power to the controller tray or the connected expansion trays until this documentation instructs you to do so. For the correct procedure for turning on the power, see "Powering On the Array" on page 42.

About AC Power Cords

- For each AC power connector on the expansion tray, make sure that you use a separate power source in the cabinet. Connecting to independent power sources maintains power redundancy.
- To ensure proper cooling and assure availability, the expansion trays always use two power supplies.
- You can use the power cords shipped with the expansion tray with typical outlets used in the destination country, such as a wall receptacle or an uninterruptible power supply (UPS). These power cords, however, are not intended for use in most EIA-compliant cabinets.

Connecting AC Power Cords

1. **Make sure that the circuit breakers in the cabinet are turned off.**
2. **Make sure that both of the Power switches on the expansion trays are turned off.**
3. **Connect the primary power cords from the cabinet to the external power source.**
4. **Connect a cabinet interconnect power cord (or power cords specific to your particular cabinet) to the AC power connector on each power module in the expansion tray.**
5. **If you are installing other expansion trays in the cabinet, connect a power cord to each power module in the expansion trays.**

About DC Power Cords

If your expansion tray has the DC power option installed, review the following information.

FIGURE 5-1 DC Power Cable

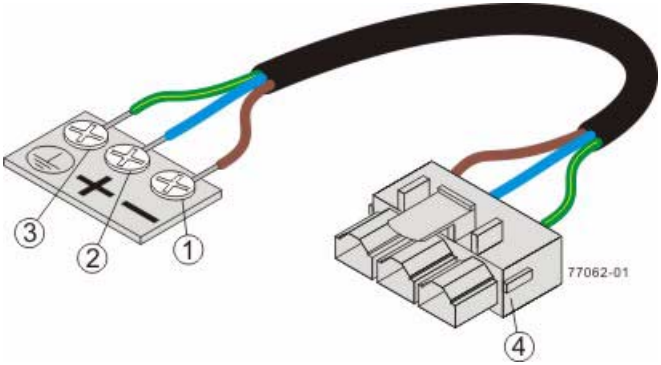

1	Supply (negative), brown wire, –48 VDC	**3**	Ground, green/yellow wire
2	Return (positive), blue wire	**4**	DC power connector

- Each power-fan module has two DC power connectors. Be sure to use a separate power source for each power-fan module in the expansion tray to maintain power redundancy. You may, optionally, connect each DC power connector on the same power-fan module to a different source for additional redundancy.
- A two-pole, 30-amp circuit breaker is required between the DC power source and the expansion tray for over-current and short-circuit protection.

Connecting DC Power Cords

Caution – Risk of bodily injury—A qualified service person is required to make the DC power connection according to NEC and CEC guidelines.

Note – Do not turn on power to the expansion tray until this guide instructs you to do so. For the proper procedure for turning on the power, see "Powering On the Array" on page 42.

1. **Disconnect the two-pole, 20-amp circuit breaker for the storage array.**
2. **Make sure that all of the DC power switches on the DC-powered expansion tray are turned off.**
3. **Connect the DC power connector cables to the DC power connectors on the rear of the controller tray or controller tray, and expansion trays.**

Note – The three source wires on the DC power connector cable (–48 VDC) connect the expansion tray to centralized DC power plant equipment, typically through a bus bar located above the cabinet.

Note – It is not mandatory that the second DC power connection on each of the expansion tray's DC power-fan modules be connected. The second DC power connection is for additional redundancy only and can be connected to a second DC power bus.

---

4. **Have a qualified service person connect the other end of the DC power connector cables to the DC power plant equipment as follows:**
   a. **Connect the brown –48 VDC supply wire to the negative terminal.**
   b. **Connect the blue return wire to the positive terminal.**
   c. **Connect the green/yellow ground wire to the ground terminal.**

Powering On the Array

1. **Turn on both Power switches on each expansion tray that is attached to the controller tray. Depending on your configuration, it can take several minutes for each expansion tray to complete the power-on process.**

   While the power is being applied to the trays, the LEDs on the front and the rear of the trays come on and go off intermittently
2. **Check the LEDs on the expansion trays to verify that the power was successfully applied to all of the expansion trays. Wait 30 seconds after turning on the power to the expansion trays before turning on the power to the controller tray.**
3. **Turn on both Power switches on the rear of the controller tray. Depending on your configuration, it can take several minutes for the controller tray to complete the power-on process.**

4. **Check the LEDs on the front and the rear of the controller tray and the attached expansion trays.**
5. **If you see any amber LEDs, make a note of their location.**

Powering Off the Array

The array rarely needs to be powered off. You remove power only when you plan to physically move the storage array to another location or are adding additional trays to a controller tray.

Caution – Before turning off any power switches on a DC-powered expansion tray, you must disconnect the two-pole, 30-amp circuit breaker.

---

1. **Stop all I/O from the hosts, if connected, to the storage array.**
2. **Wait approximately two minutes until all disk drive LEDs have stopped flashing.**

Note – If Disk Scrubbing is enabled, the disk drive LEDs will continue to flash after the 2-minute period has elapsed. By waiting the 2-minute period, you ensure that the data residing in cache has been written to disk. The LED flash rate during disk scrubbing (slow, periodic blink) is different from the flash rate of I/O (fast, random).

After the 2-minute period, data residing in cache is written to disk and the battery mechanisms are disengaged.

3. **Check the Cache Active LED on the controller to determine if any outstanding cache needs to be written.**

   If the LED is on, there is still data that needs to be flushed and written to disk.

4. **Ensure that the Cache Active LED is no longer flashing before powering off the storage array.**
5. **Press each power switch at the back of the controller tray to the Off position.**
6. **Press the power switches at the back of each expansion tray to the Off position.**

Next Steps

After you have connected the management host and data hosts, you are ready to install the management host software as described in the *Sun Storage Common Array Manager Quick Start Guide* or the *Sun Storage Common Array Manager Installation and Setup Guide.*

APPENDIX **A**

LEDs and Diagnostic Codes

This chapter describes the LEDs and diagnostic codes on the controller tray, drive trays, and the components of the trays.

LED Symbols and General Behavior

TABLE A-1 LED Symbols and Description

LED	Symbol	Location (Modules)	Function
Power		Power-fan Interconnect-battery	On—The controller has power. Off—The controller does not have power. **Note -** The controller modules do not have a Power LED. They receive their power from the power supplies inside the power-fan modules.
Battery Fault		Battery	On—The battery is missing or has failed. Off—The battery is operating normally. Blinking—The battery is charging.
Service Action Allowed		Drive Power-fan Controller Battery	On—You can remove the module safely. See "About Service Action Allowed LEDs" on page 47.

TABLE A-1 LED Symbols and Description *(Continued)*

LED	Symbol	Location (Modules)	Function
Service Action Required (Fault)		Drive	On—When the drive tray LED is on, the cable is attached and at least one lane has a link up status, but at least one lane has a link down status. Off—One of the following conditions exists: • No cable is attached. • A cable is attached, and all lanes have a link up status. • A cable is attached, and all lanes have a link down status.
Service Action Required (Fault)		Controller Power-fan module	On—The controller or the power-fan module needs attention. Off—The controller and the power-fan module are operating normally.
Locate		Front frame	On—Assists in locating the tray.
Cache Active		Controller	The activity of the cache is indicated: On—Data is in the cache. Off—No data is in the cache.
Controller Tray Over-Temperature		Front bezel on the controller tray	On—The temperature of the tray has reached an unsafe condition. Off—The temperature of the tray is within operational range.
Standby Power		Front bezel on the controller tray	On—The controller tray is in standby mode and the main DC power is off. Off—The controller tray is not in standby mode and the main DC power is on.
7-Segment ID Diagnostic Display		Controller	The tray ID or a diagnostic code is indicated (see "Controller Tray Diagnostic Code Sequences" on page 57). For example, if some of the cache memory dual in-line memory modules (DIMMs) are missing in a controller, error code L8 appears in the diagnostic display (see "Controller Tray Lock-Down Codes" on page 56).

TABLE A-1 LED Symbols and Description *(Continued)*

LED	Symbol	Location (Modules)	Function
AC power	AC ∿	Power-fan module **Note -** The LED is directly above or below the AC power switch and the AC power connector.	Indicates that the power supply is receiving DC power input.
DC power	DC	Power-fan module **Note -** The LED is directly above or below the DC power switch and the DC power connector.	Indicates that the power supply is receiving DC power input.
Ethernet Speed and Ethernet Activity		Controller	The speed of the Ethernet ports and whether a link has been established are indicated: • Left LED On—1-Gb/s speed. • Left LED Off—100BASE-T or 10BASE-T speed. • Right LED On—A link is established. • Right LED Off—No link exists. • Right LED blinking—Activity is occurring

About Service Action Allowed LEDs

- Each controller module, power-fan module, and battery module has a Service Action Allowed LED. The Service Action Allowed LED lets you know when you can remove a module safely.

Caution – Possible loss of data access—Never remove a controller module, a power-fan module, or a battery module unless the appropriate Service Action Allowed LED is on.

- If a controller module or a power-fan module fails and must be replaced, the Service Action Required (Fault) LED on that module comes on to indicate that service action is required. The Service Action Allowed LED also comes on if it is safe to remove the module. If data availability dependencies exist or other conditions that dictate a module should not be removed, the Service Action Allowed LED stays off.
- The Service Action Allowed LED automatically comes on or goes off as conditions change. In most cases, the Service Action Allowed LED comes on when the Service Action Required (Fault) LED comes on for a module.

Note – If the Service Action Required (Fault) LED comes on but the Service Action Allowed LED is off for a particular module, you might need to service another module first. Check Service Advisor to determine the action that you should take.

Disk Drives LEDs

FIGURE A-1 LEDs on Disk Drives

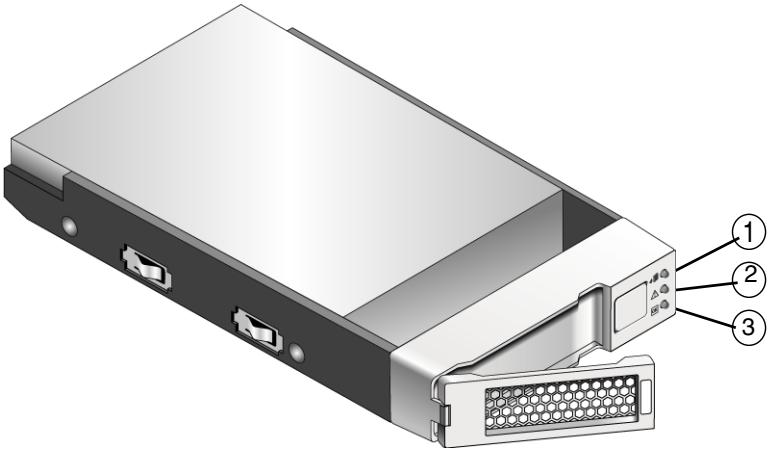

TABLE A-2 Disk Drive LEDs

Location	LED	Color	On	Blinking	Off
1	Service Action Allowed	Blue	The drive module can be removed safely from the tray.	N/A	The drive module cannot be removed safely from the tray.
2	Service Action Required	Amber	An error has occurred.	N/A	Normal status.
3	Drive Ready/Activity	Green	The power is turned on, and the drive is operating normally.	Drive I/O activity is taking place.	The power is turned off.

TABLE A-3 Disk Drive States Represented by the LEDs

Disk Drive State	Power (Green LED)	Fault (Amber LED)
Power is not applied.	Off	Off
Normal operation, power is turned on, no disk drive I/O activity is occurring.	On, solid	Off
Normal operation, disk drive I/O activity is occurring.	On, blinking	Off
Service action required, a fault condition exists, and the disk drive is offline.	On, solid	On, solid

Controller Tray and Expansion Tray LEDs

The LEDs on the front of the Sun Storage 2540-M2 FC array, Sun Storage 2530-M2 SAS array, and the Sun Storage 2501-M2 expansion tray are identical in appearance and function.

The LEDs are located at the front and back of the trays.

LEDs on the Front of the Trays

FIGURE A-2 Location of the LEDs on the Front of the Trays

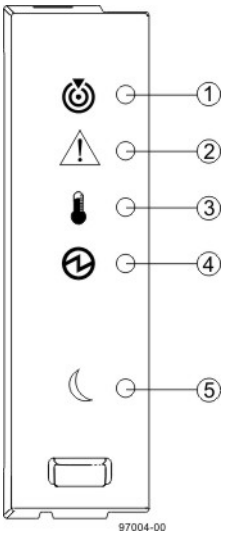

TABLE A-4 Description of the LEDs on the Left End Cap

Location	LED	Color	On	Off
1	Tray Locate	White	Identifies a tray that you are trying to find.	Normal condition.
2	Service Action Required (Fault)	Amber	A component within the tray requires attention.	The components in the tray are operating normally.
3	Tray Over-temperature	Amber	The temperature of the tray has reached an unsafe level.	The tray temperature is within operational range.
4	Power	Green	Tray is powered on.	Tray is not powered on.
5	Standby Power	Green	The tray is in Standby Power mode.	The tray is not in Standby Power mode.

LEDs on the Rear of the Trays

Controller LEDs on Sun Storage 2500-M2 Arrays

FIGURE A-3 Locations of the Controller LEDs on Sun Storage 2500-M2 Arrays (Rear View)

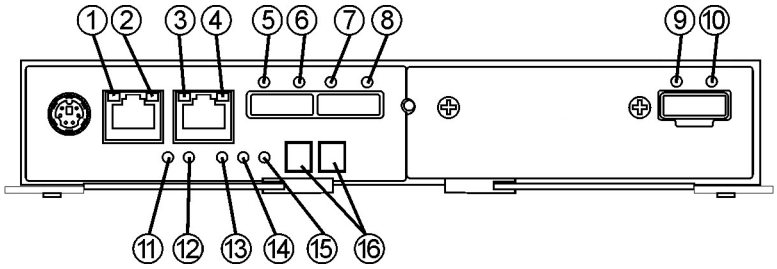

TABLE A-5 Controller LED Descriptions

Location	LED	Color	On	Off
1	Ethernet port 1 Link Rate	Green	Port speed is 1000 Mb/sec.	Port speed is 10/100 Mb/sec.
2	Ethernet port 1 Link Active	Green	The link is up. LED blinks with transmit or receive activity.	The link is down or not active.
3	Ethernet port 2 Link Rate	Green	Port speed is 1000 Mb/sec.	Port speed is 10/100 Mb/sec.
4	Ethernet port 2 Link Active	Green	The link is up. LED blinks with transmit or receive activity.	The link is down or not active.
5	Host Link 2 Service Action Required	Amber	Indicates a fault on one of the ports.	Amber and green LEDs off indicates cable unplugged.
6	Host Link 2 Activity	Green	All links operating.	Amber and green LEDs off indicates cable unplugged.
7	Host Link 1 Service Action Required	Amber	Indicates a fault on one of the ports.	Amber and green LEDs off indicates cable unplugged.
8	Host Link 2 Activity	Green	All links operating.	Amber and green LEDs off indicates cable unplugged.
9	Expansion Fault	Amber	Indicates a fault on one of the links.	Amber and green LEDs off indicates cable unplugged.
10	Expansion Activity	Green	All links operating.	Amber and green LEDs off indicates cable unplugged.
11	Battery Fault	Amber	Battery failure.	Battery is operating normally.

TABLE A-5 Controller LED Descriptions *(Continued)*

Location	LED	Color	On	Off
12	Battery Charging	Green	Flashes at 1Hz during charging. On indicates fully charged.	Battery faulted or operating without a battery.
13	Service Action Allowed	Blue	The controller module can be removed safely from the controller tray. (Defaults to On at power-up.)	The controller module cannot be removed safely from the controller tray. (Software turns this LED Off during boot.)
14	Service Action Required (Fault)	Amber	Indicates a fault was detected on the board. (Defaults to On at power up.)	Power up self-test sequence has completed. .
15	Cache Active / Cache Offloading	Green	Battery backup is enabled to support caching activity. If AC power fails, this LED indicates cache offloading is occurring.	Cache is inactive or the controller module has been removed from the controller tray.
16	7-Segment Display	Green	Displays the tray ID and error codes. See TABLE A-8, TABLE A-9, TABLE A-10, and TABLE A-11.	

Fibre Channel Host Port LEDs

FIGURE A-4 shows the location of the Fibre Channel (FC) host port LEDs.

FIGURE A-4 FC Host Port LEDs on the Sun Storage 2540-M2 (Rear View)

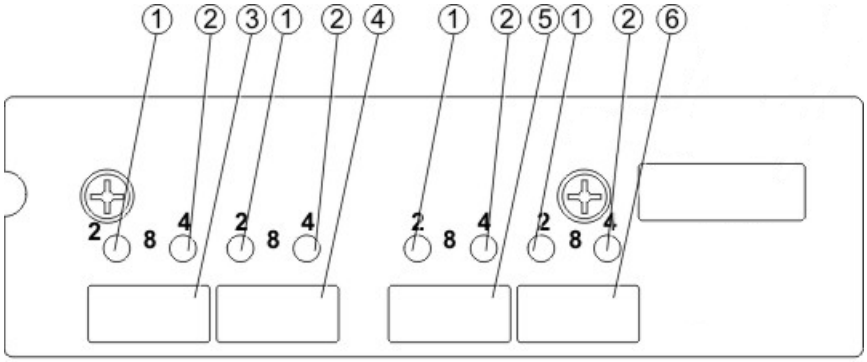

TABLE A-6 FC Host Port LEDs on the Sun Storage 2540-M2 (Rear View)

Location	Description
1 and 2	Fibre Channel (FC) Link Status LEDs **Note -** Both LEDs are green. LED 1 OFF, LED 2 OFF = No Link LED 1 ON, LED 2 OFF = 2 Gb/sec Link LED 1 OFF, LED 2 ON = 4 Gb/sec Link LED 1 ON, LED 2 ON = 8 Gb/sec Link
3	FC Host Port (Channel 3)
4	FC Host Port (Channel 4)
5	FC Host Port (Channel 5)
6	FC Host Port (Channel 6)

Power-Fan Module LEDs on Controller Tray and Expansion Tray

The power-fan module LEDs for the Sun Storage 2540-M2 FC array, the Sun Storage 2530-M2 SAS array, and the Sun Storage 2501-M2 Array expansion tray are identical.

FIGURE A-5 Locations of the Power-Fan Module LEDs

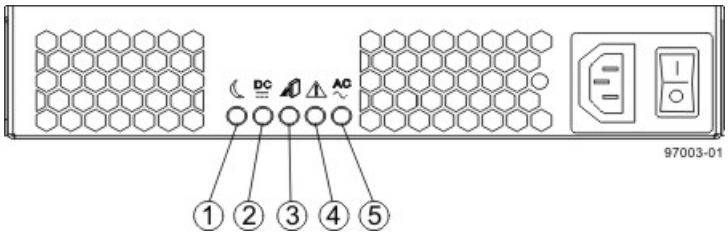

TABLE A-7 Descriptions of the Power-Fan Module LEDs

Location	LED	Color	On	Off
1	Standby Power	Green	The tray is in Standby mode (5V), and DC power is not available.	The tray is not in Standby mode, and DC power is available.
2	DC Power	Green	DC power from the power-fan module is available and within the specified limits.	DC power from the power-fan module is not available.
3	Service Action Allowed	Blue	The power-fan module can be removed safely from the tray.	The power-fan module cannot be removed safely from the tray.
4	Service Action Required	Amber	Indicates a fault when (a) the power cord is plugged in, the power switch is on and the power supply is not correctly connected to the midplane, or (b) power cord is plugged in, the power switch is on, the power supply is correctly seated in the midplane, and a power supply or blower fault or over-temperature condition exists.	Normal status.
5	AC Power	Green	AC power to the power-fan module is present.	AC power to the power-fan module is not present.

Controller Tray Sequence Code Definitions

During normal operation, the tray ID display on each controller module displays the controller tray ID. The Diagnostic LED (lower-digit decimal point) comes on when the display is used for diagnostic codes and goes off when the display is used to show the tray ID.

TABLE A-8 Sequence Code Definitions for the Controller Tray

Category	Category Code (See Note 1)	Detail Codes (See Note 2)
Startup error	`SE+ (See Note 3)`	88+ Power-on default dF+ Power-on diagnostic fault
Operational error	`OE+`	Lx+ Lock-down codes (See the following table)
Operational state	`OS+`	OL+ = Offline. bb+ = Battery backup (operating on batteries) Cf+ = Component failure
Component failure	`CF+`	dx+ = Processor or cache DIMM. Cx = Cache DIMM Px+ = Processor DIMM Hx+ = Host interface card Fx+ = Flash drive
Diagnostic failure	`dE+`	Lx+ = Lock-down code
Category delimiter	`dash+`	The separator between category-detail code pairs is used when more than one category detail code pair exists in the sequence.
End-of-sequence delimiter	Blank (See Note 4)	The end-of-sequence delimiter is automatically inserted by the hardware at the end of a code sequence.

Notes:

1. A two-digit code that starts a dynamic display sequence.
2. A two-digit code that follows the category code with more specific information.
3. The plus (+) sign indicates that a two-digit code displays with the Diagnostic LED on.
4. No codes display, and the Diagnostic LED is off.

Controller Tray Lock-Down Codes

Use the following table to determine the diagnostic lock-down code definitions on the 7-Segment Display in the controller module for the controller tray.

TABLE A-9 Supported Diagnostic Lock-Down Codes on the 7-Segment Display

Diagnostic Code	Description
`- -`	The firmware is booting.
`.8, 8., or 88`	This IOM is being held in reset by another IOM.
`AA`	The IOM A firmware is in the process of booting (the diagnostic indicator is not yet set).
`bb`	The IOM B firmware is in the process of booting (the diagnostic indicator is not yet set).
`L0`	The controller types are mismatched, which result in a suspended controller state.
`L2`	A persistent memory error has occurred, which results in a suspended controller state.
`L3`	A persistent hardware error has occurred, which results in a suspended controller state.
`L4`	A persistent data protection error has occurred, which results in a suspended controller state.
`L5`	An auto-code synchronization (ACS) failure has been detected, which results in a suspended controller state.
`L6`	An unsupported host interface card has been detected, which results in a suspended controller state.
`L7`	A sub-model identifier either has not been set or has been mismatched, which results in a suspended controller state.
`L8`	A memory configuration error has occurred, which results in a suspended controller state.
`L9`	A link speed mismatch condition has been detected in either the IOM or the power supply, which results in a suspended controller state.
`Lb`	A host interface card configuration error has been detected, which results in a suspended controller state.
`LC`	A persistent cache backup configuration error has been detected, which results in a suspended controller state.
`Ld`	A mixed cache memory DIMMs condition has been detected, which results in a suspended controller state.
`LE`	Uncertified cache memory DIMM sizes have been detected, which result in a suspended controller state.

TABLE A-9 Supported Diagnostic Lock-Down Codes on the 7-Segment Display

Diagnostic Code	Description
LF	The controller has locked down in a suspended state with limited symbol support.
LH	A controller firmware mismatch been detected, which results in a suspended controller state.
LL	The controller cannot access either midplane SBB EEP-ROM, which results in a suspended controller state.
Ln	A module is not valid for a controller, which results in a suspended controller state.
LP	Drive port mapping tables are not detected, which results in a suspended controller state.
LU	The start-of-day (SOD) reboot limit has been exceeded, which results in a suspended controller state.

Controller Tray Diagnostic Code Sequences

TABLE A-10 Diagnostic Code Sequences for the Controller Tray

Displayed Diagnostic Code Sequences	Description
SE+ 88+ blank-	One of the following power-on conditions exists: Controller power-on Controller insertion Controller inserted while held in reset
xy -	Normal operation.
OS+ Sd+ blank-	Start-of-day (SOD) processing.
OS+ OL+ blank-	The controller is placed in reset while displaying the tray ID.
OS+ bb+ blank-	The controller is operating on batteries (cache backup).
OS+ CF+ Hx + blank-	A failed host card has been detected.
OS+ CF+ Fx + blank-	A failed flash drive has been detected.
SE+ dF + blank-	A non-replaceable component failure has been detected.
SE+ dF + dash+ CF+ Px + blank-	A processor DIMM failure has been detected.
SE+ dF + dash+ CF+ Cx + blank-	A cache memory DIMM failure has been detected.

TABLE A-10 Diagnostic Code Sequences for the Controller Tray *(Continued)*

Displayed Diagnostic Code Sequences	Description
`SE+ dF + dash+ CF+ dx + blank-`	A processor or cache DIMM failure has been detected.
`SE+ dF + dash+ CF+ Hx + blank-`	A host card failure has been detected.
`OE+ Lx + blank-`	A lockdown condition has been detected.
`OE+ L2+ dash+ CF+ Px + blank-`	Persistent processor DIMM ECC errors have been detected, which result in a suspended controller state.
`OE+ L2+ dash+ CF+ Cx + blank-`	Persistent cache DIMM ECC errors have been detected, which result in a suspended controller state.
`OE+ L2+ dash+ CF+ dx + blank-`	Persistent processor or cache DIMM ECC errors have been detected, which result in a suspended controller state.
`OE+ LC+ blank-`	The write-protect switch is set during cache restore, which results in a suspended controller state.
`OE+ LC+ dd + blank-`	The memory size is changed from bad data in the flash drives, which results in a suspended controller state.
`DE+ L2+ dash+ CF+ Cx + blank-`	A cache memory diagnostic has been reported failed, which results in a suspended controller state.

Expansion Tray 7-Segment Display

- During normal operation, the tray ID display on each IOM displays the expansion tray ID. The Diagnostic LED (lower-digit decimal point) comes on when the display is used for diagnostic codes and goes off when the display is used to show the tray ID.
- If a power-on or reset occurs, the Diagnostic LED, the Heartbeat LED (upper-digit decimal point), and all seven segments of both digits come on. The Diagnostic LED remains on until the expansion tray ID appears.

TABLE A-11 Supported Diagnostic Codes

Diagnostic Code	IOM State	Description
`.8, 8., or 88`	Suspended	This IOM is being held in reset by another IOM.
`L0`	Suspended	The IOM types are mismatched.
`L2`	Suspended	A persistent memory error has occurred.

TABLE A-11 Supported Diagnostic Codes *(Continued)*

Diagnostic Code	IOM State	Description
L3	Suspended	A persistent hardware error has occurred.
L9	Suspended	An over-temperature condition has been detected in either the IOM or the power supply.
LL	Suspended	The midplane SBB VPD EEPROM cannot be accessed.
Ln	Suspended	The IOM module is not valid for this drive tray.
LP	Suspended	Drive port mapping tables are not found.
H0	Suspended	An IOM Fibre Channel interface failure has occurred.
H1	Suspended	An SFP transceiver speed mismatch (a 2-Gb/s SFP transceiver is installed when the drive tray is operating at 4 Gb/s) indicates that an SFP transceiver must be replaced. Look for the SFP transceiver with a blinking amber LED.
H2	Suspended	The IOM configuration is invalid or incomplete, and it operates in a Degraded state.
H3	Suspended	The maximum number of IOM reboot attempts has been exceeded.
H4	Suspended	This IOM cannot communicate with the alternate IOM.
H5	Suspended	A midplane harness failure has been detected in the drive tray.
H6	Suspended	An IOM firmware failure has been detected.
H8		SFP transceivers are present in currently unsupported IOM slots, either 2A or 2B. Secondary trunking SFP transceiver slots 2A and 2B are not supported. Look for the SFP transceiver with the blinking amber LED, and remove it.
H9		A non-catastrophic hardware failure has occurred. The IOM is operating in a Degraded state.
J0	Suspended	The IOM module is incompatible with the drive tray firmware.

APPENDIX **B**

Configuring IP Addressing

To have an out-of-band Ethernet connection between the local management host and the controller modules, the management host and the controllers must have valid IP addresses.

This appendix describes how to configure IP addressing on the local management host and on the controller modules. It contains the following sections:

About IP Addressing

Sun Storage 2500-M2 Arrays are managed out-of-band, by default, by way of a standard Ethernet connection between the controller modules and your management host.

Perform the following procedures to ensure that the local management host and the controllers have valid IP addresses:

- Configure IP addresses for the controller modules (see "Configuring the IP Address of the Controller Modules" on page 62).
- Configure an IP address for the management host (see the *Sun Storage Common Array Manager Software Installation and Setup Guide*).

Configuring the IP Address of the Controller Modules

- Dynamic Host Configuration Protocol (DHCP) IP addressing–IP addresses for the Ethernet port are assigned dynamically from a DHCP server running bootstrap protocol (BOOTP) services. An IP address assigned to an Ethernet port is held only as long as needed. By default, DHCP is enabled at initial power-on.
- Static IP Addressing–You assign a specific IP address to the Ethernet port of each controller. Static IP addresses remain in effect until you modify or remove them or you change the method of IP addressing for the Ethernet port to DHCP.
- By default, if the controllers cannot find a DHCP server upon initial power-on, an internal IP address is assigned to Ethernet port 1 of each controller:
- The Ethernet port of Controller A is assigned IP address 192.168.128.101
- The Ethernet port of Controller B is assigned IP address 192.168.128.102
- The default subnet mask for each port is 255.255.255.0

To configure the Ethernet port on a controller with either dynamic or static IP addressing, see one of the following sections:

- "Configuring Dynamic (DHCP) IP Addressing" on page 62
- "Configuring Static IP Addressing" on page 63

Configuring Dynamic (DHCP) IP Addressing

If BOOTP services are available on the DHCP server at initial power on of the storage array, this server assigns a dynamic IP address for the Ethernet port on each controller.

If a DHCP server is not available, the controller tray defaults to internal static IP addresses as described in "About IP Addressing" on page 61.

If you want to set up a DHCP server, refer to Appendix C for a description of how to configure BOOTP services in Sun Solaris or Microsoft Windows environments.

You can restore DHCP IP addressing to Ethernet port 1 of either controller in either of three ways:

- Start a DHCP server on the same subnet, then reboot the array.
- Using the serial port interface (see "Using the Serial Port Interface to Assign IP Addresses" on page 63).

- Using Sun Storage Common Array Manager (see the *Sun Storage Common Array Manager Installation and Setup Guide*).

Configuring Static IP Addressing

There are two methods of assigning static IP addresses to the Ethernet ports of a controller:

- The serial port interface (see "Using the Serial Port Interface to Assign IP Addresses" on page 63).
- Sun Storage Common Array Manager (see the *Sun Storage Common Array Manager Installation and Setup Guide*).

Using the Serial Port Interface to Assign IP Addresses

You can use the serial port interface on a controller to set the IP address for the Ethernet port on the controller.

To use the serial port interface to configure IP addressing for the Ethernet port of each controller, you must complete the tasks described in the following sections:

- "Connecting a Terminal to the Serial Port" on page 63
- "Setting Up the Terminal Emulation Program" on page 64
- "Establishing a Connection With the Serial Port" on page 64
- "Configuring the IP Addresses" on page 666

Connecting a Terminal to the Serial Port

You will establish a serial connection to each controller, Controller A and Controller B. One mini-DIN to RJ45 serial port cables are supplied with each controller tray.

1. **Connect the 6-pin mini-DIN connector of the serial cable to the serial port on the controller.**
2. **Connect the RJ-45 connector of the serial cable to the serial port on the terminal. It may be necessary to use the RJ45-DB9 adapter between the serial cable RJ-45 connector and the serial port of the terminal.**
3. **For PC and laptop serial connections, you will also need to use a null modem. Connect the RJ45-DB9 null modem adapter between the serial cable RJ-45 connector and the PC serial port.**

Note – If your PC does not have a serial port, you can use a USB–Serial Port adapter (separately available from third-party vendors; not included with the ship kits).

Serial Cable Pinouts

TABLE B-1 shows the pinouts for the RJ45-mini-DIN serial cable included with the ship kit.

TABLE B-1 RJ45 to mini-DIN Serial Cable Pinouts

RJ45 ---------->	PS2-miniDin
1 Tx	6 Rx
2	
3 Rx	1 Rx
4,5,7	3, 5 GRD
6 Rx	2 Tx
8	4

Setting Up the Terminal Emulation Program

1. **Select VT100 emulation.**
2. **Remove any modem strings from the connection profile.**
3. **Set up the connection profile with the following communication settings:**

- Data Rate: 38400
- Data Bits: 8
- Parity: None
- Stop Bits: 1
- Flow Control: None

Establishing a Connection With the Serial Port

1. **Send a Break. Repeat until text appears.**

Note – The storage array serial port requires that the break character be received. Use the appropriate escape sequence for your terminal setup to send the required break character to the controller, For example, you generate the Break character on some terminals by pressing the Control and Break keys simultaneously.

The serial port responds with a request to synchronize with the baud rate of the terminal:

```
Set baud rate: press <space> within 5 seconds
```

2. **Press the space bar within five seconds.**

   The serial port confirms the established baud rate for the connection:

   ```
   Baud rate set to 38400
   ```

3. **Press Break (see Note above)**

   The serial port responds with the following message:

   ```
   Press within 5 seconds: <S> for Service Interface, <BREAK> for
   baud rate
   ```

4. **Press S to access the Service Interface menu.**

Note – Send Break to synchronize the serial port to a different terminal port rate (see Note above).

The serial port requests the serial port password:

```
Enter Password to access Service Interface (60 sec timeout):
->
```

5. **Type the serial port password, kra16wen, and press Enter.**

   The Service Interface menu is displayed.

```
Service Interface Main Menu
 ==============================
1) Display IP Configuration
2) Change IP Configuration
3) Reset Storage Array (SYMbol) Password
Q) Quit Menu

Enter Selection:
```

Configuring the IP Addresses

The serial port Service Interface menu enables you to set up the IP address configuration for the Ethernet port on the controller.

To set up the IP address configuration for the Ethernet port on each controller:

1. **Select option 2, Change IP Configuration:**

```
Service Interface Main Menu
 ==============================
1) Display IP Configuration
2) Change IP Configuration
3) Reset Storage Array (SYMbol) Password
Q) Quit Menu

Enter Selection: 2
```

2. **Specify that you do not want dynamic IP addressing, using a DHCP server, used for this port:**

```
Configure using DHCP? (Y/N): n
```

The current or default IP configuration for the selected Ethernet port is displayed.

3. **Enter the static IP address and, optionally, a subnet mask for the Ethernet port:**

Note – If you are not using DHCP IP addressing and have a gateway IP address on your subnet, you must also specify a gateway IP address for the Ethernet port. This option displays only if the serial interface detects a gateway.

```
Press '.' to clear the field;
Press '-' to return to the previous field;
Press <ENTER> and then ^D to quit (Keep Changes)

                Current Configuration          New Configuration
IP Address      if1 : 192.168.128.101          IP-address
Subnet Mask     if1 : 255.255.255.0            <ENTER>
Gateway IP Address if1:                        <ENTER>
```

4. **When prompted, confirm the specified IP addressing.**

The Service Interface menu is refreshed.

5. **Select option 1, Display IP Configuration, to confirm the IP address changes.**

```
Service Interface Main Menu
 ==============================
1) Display IP Configuration
2) Change IP Configuration
3) Reset Storage Array (SYMbol) Password
Q) Quit Menu

Enter Selection: 1
```

The IP address configuration of the Ethernet port is displayed, and the Service Interface menu displays again.

6. **Press Q to quit the Service Interface menu.**

7. **Switch the serial cable to the serial port on the other controller and repeat these steps to set the IP address on that controller as well.**

8. **Power cycle the controllers off and on again to reset them with the new IP address.**

When you have completed the IP address configuration for the Ethernet port on both controllers and power cycled them, see the *Sun Storage Common Array Manager Installation and Setup Guide* for instructions on registering and configuring the array.

APPENDIX C

Configuring a DHCP Server

This appendix describes how to configure bootstrap protocol (BOOTP) services in a Sun Solaris and Microsoft Windows environment. It contains the following sections:

Dynamic IP addresses are assigned through dynamic host control protocol (DHCP) server BOOTP services.

Before You Begin

You need each controller's media access control (MAC) address to configure the DHCP server. The MAC address is located on the bar code label at the back of each controller. Because there are two controller modules per controller tray, you need two MAC addresses.

Setting Up a Solaris DHCP Server

The following procedure provides an example of how to set up a DHCP server with the BOOTP option for the Solaris 8, 9, and 10 Operating Systems. Your environment may require different steps.

1. **Modify the** `netmasks` **line of the** `/etc/nsswitch.conf` **file as shown here:**

```
#netmasks:   nis [NOTFOUND=return] files

netmasks:   files nis [NOTFOUND=return]
```

2. **Start the DHCP wizard by issuing the following command at the command line:**

```
/usr/sadm/admin/bin/dhcpmgr &
```

3. **Select Configure as DHCP server.**

4. **Respond to the wizard prompts, as follows:**
   - Data storage format: **`Text files`**
   - Name service to store host records: **`Do not manage hosts records`**
   - Length of lease:
   - Network Address: *Network address of Controller A*
   - Subnet Mask: For example, `255.255.255.0`
   - Network Type: **`Local-Area (LAN)`**
   - Router: **`Use router discovery protocol`**

Your summary page should look similar to the following example:

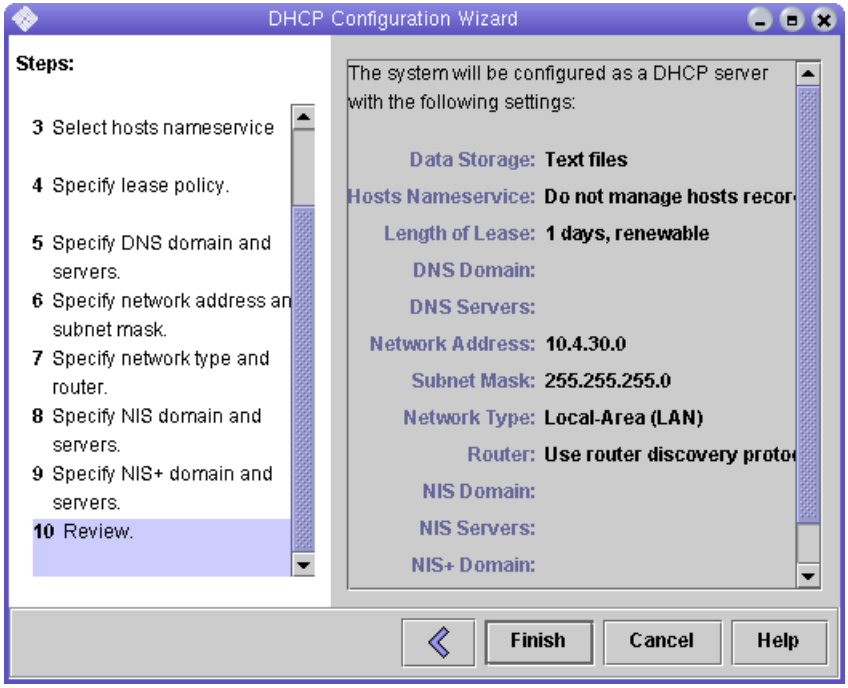

5. **Verify your configuration information, and click Finish.**

6. **When you are prompted to configure addresses for the server, click Yes.**

   The Add Address to Network wizard is displayed.

7. **Enter the following information:**

   - Number of IP addresses
   - Name of managing server
   - Starting IP address
   - Configuration macro to be used for configuring the clients
   - Lease type

Your summary page should look similar to the following example:

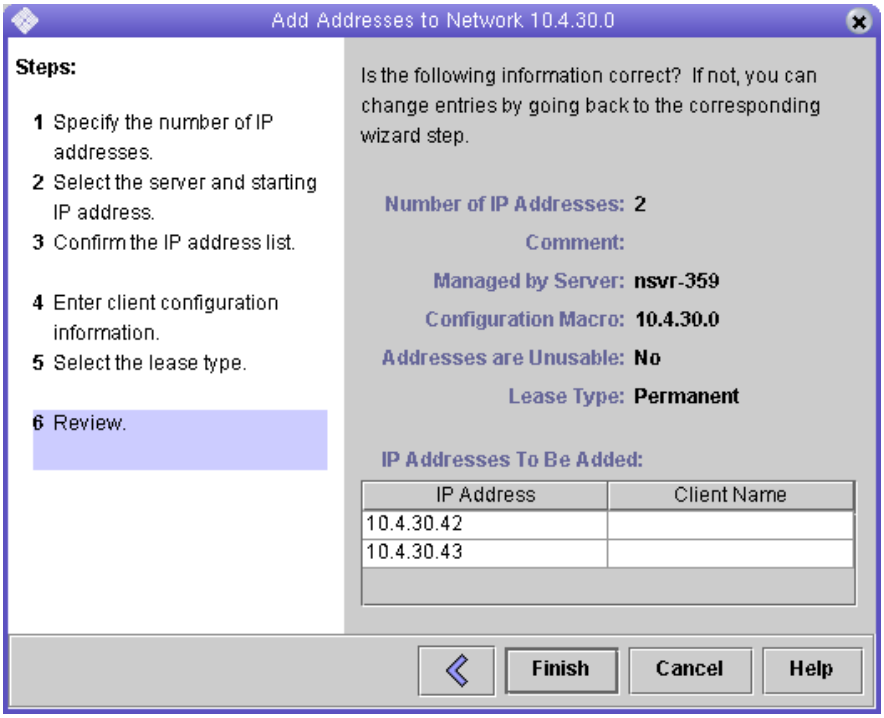

8. **Verify your configuration information and click Finish.**

9. **In the Address Properties window, do the following:**

   a. **In each Client ID field, enter** `01` **followed by the MAC address that is printed on the back of the controller. For example:**

      `0100A0E80F924C`

   b. **Toward the bottom of the window, select Assign only to BOOTP clients.**

   c. **Click OK.**

      The DHCP manager updates the status and client ID.

10. **Go to Modify Service Options, and do the following:**

    a. **Select Detect Duplicate IP addresses.**

    b. **Under BOOTP Compatibility, select Automatic.**

    c. **Select Restart Server.**

    d. **Click OK.**

After the configuration process has finished, the DHCP server provides BOOTP services to the MAC address you entered for each controller.

11. **To verify that the BOOTP service is running, go to Service >> Restart.**
12. **After you power on the storage array, ping the address.**

    If the ping responds with '`alive`', the DHCP server BOOTP operation was successful.

Setting Up a DHCP for Windows 2000 Advanced Server

Before you begin, make sure the following requirements are met:

- Windows 2000 server and the storage array are both on the same subnet.
- IP addresses that are assigned to the controllers do not conflict.
- The array is in BOOTP IP addressing mode (the default setting for a new array).
- The Windows 2000 Server setup CD is available.

The following procedure provides an example of how to set up DHCP with the BOOTP option on the Windows 2000 Advanced Server. Your environment might require different steps.

Installing the DHCP Server for Windows

To install DHCP server on the Windows 2000 Advanced Server:

1. **From the Control Panel, go to Administrative Tools >> Configure Your Server.**
2. **Select DHCP from the Networking drop-down menu on the left.**

    The wizard instructs you to use the Windows Components wizard to add the DHCP component.
3. **Start the Windows Components wizard and double-click Networking Services.**
4. **Select Dynamic Host Configuration Protocol (DHCP), click the check box to its left, and click OK.**

    The Windows Components wizard is displayed.
5. **Click Next.**

6. **If Terminal Services Setup is displayed, select Remote administration mode. Click Next.**

   If your server has obtained an address from a DHCP server for its own address, a warning is displayed.

7. **Click OK to accept the warning.**

   Local Area Connection Properties is displayed.

8. **Assign a static IP address to the server, or click Server to keep DHCP addressing for the server. Click OK.**

9. **Click Finish to exit the Windows Components wizard.**

   The DHCP server is now installed. The next step is to configure the server.

Configuring the DHCP Server for Windows

1. **From the Control Panel, go to Administrative Tools >> Computer Management >> Services and Application >> DHCP.**

2. **From the Action menu, select New Scope.**

   The New Scope wizard is displayed.

3. **Enter the following information as prompted:**
   - Scope name and description:
   - IP address range (for example, `192.168.0.170` to `192.168.0.171`)
   - Subnet mask (for example, `255.255.255.0`)
   - Add exclusions (do not exclude any IP addresses)
   - Lease duration (accept the default of 8 days)
   - Router (default gateway) of your subnet (for example, `192.168.0.1`)
   - Domain name, WINS server (these are not needed)
   - Activate Scope? (select "Yes, I want to activate this scope now")

4. **Click Finish to exit the wizard.**

   The contents of the DHCP server are listed.

5. **Right-click Scope [*ipaddress*] *scope-name* and select Properties.**

6. **In the Scope Properties box, click the Advanced tab.**

7. **Select BOOTP only, set the lease duration to Unlimited, and click OK.**

8. **Right-click Reservations.**

   The Controller A Properties box is displayed.

9. **Enter the IP address and the MAC address for Controller A. Click Add.**

   The Controller B Properties box is displayed.

10. **Enter the IP address and the MAC address for Controller B. Click Add.**

    The controllers are added to the right of the Reservations listing.

11. **Right-click Scope [*ipaddress*] *scope-name* to disable the scope.**

12. **Click Yes to confirm disabling of the scope.**

13. **Right-click Scope and select Activate.**

    The DHCP server is now configured with the BOOTP option for the array network.

14. **Power on or power cycle the array modules.**

15. **Click Address Leases in the left pane to check the DHCP server leases.**

    The lease expiration displays the following status for each controller:

    `Reservation (active)`

If the lease expiration for the controllers is inactive, try refreshing the list. If the lease is still inactive, check the following:

- Are the IP addresses allocated for BOOTP conflicting?
- Were the correct MAC addresses added to the DHCP server for the controllers?
- Are the DHCP server and storage array on the same subnet?
- Is the gateway configured correctly on the DHCP server?

  The controllers can gain a lease and an IP address, but they cannot respond out of the subnet for the software if the gateway is not configured properly.

- Are the controllers set up for BOOTP access?

  It is possible that they were previously configured to have static IP addresses. You must be sure when you move an array that you change the array's IP addresses to IP addresses on the new subnet before setting up BOOTP services.

Glossary

Definitions obtained from the Storage Networking Industry Association (SNIA) Dictionary are indicated with "(SNIA)" at the end. For the complete SNIA Dictionary, go to:

http://www.snia.org/education/dictionary

agent The component of the system monitoring and diagnostic software that collects health and asset information about the array.

alarm A type of event that requires service action. See also event.

alert A subtype of an event that requires user intervention. The term *actionable event* often describes an alert. See also event.

array Multiple disk drives that function as a single storage device. A high-availability (HA) array configuration has redundant controllers and expansion trays of disk drives.

array hot-spare A disk that serves as a hot-spare within an array as part of the storage pool; a reserve disk that can be made available to all virtual disks within an array. See also hot-spare.

block The amount of data sent or received by the host per I/O operation; the size of a data unit.

capacity The amount of storage you must allocate to storage elements, including volumes, pools, and virtual disks. Capacity planning should include allocations for volume snapshots and volume copies.

CLI Command-line interface. The SSCS command-line interface is available from the remote CLI client or through an SSCS directory on the Solaris Operating System management software station.

controller tray One tray with drives, two controllers, fans, and power supplies. The controller tray provides the interface between a host and a storage array.

control path The route used for communication of system management information, usually an out-of-band connection.

customer LAN See site LAN.

DAS See direct attached storage (DAS).

data host Any host that uses the system for storage. A data host can be connected directly to the array (direct attach storage, or DAS) or can be connected to an external switch that supports multiple data hosts (storage area network, or SAN). See also host.

data host software Provides tools that manage the data path I/O connections between the data host and the storage array. This includes drivers and utilities that enable storage management hosts to connect to, monitor, and transfer data in a storage area network (SAN).

data path The route taken by a data packet between a data host and the storage device.

direct attached storage (DAS) A storage architecture in which one or two hosts that access data are connected physically to a storage array.

disk A physical drive component that stores data.

event A notification of something that happened on a device. There are many types of events, and each type describes a separate occurrence. See also alarm and alert.

expansion tray A tray that does not have a RAID controller, used to expand the capacity of an array. This type of tray must be attached to a controller tray to function.

extent A set of contiguous blocks with consecutive logical addresses on a physical or virtual disk.

failover and recovery The process of changing the data path automatically to an alternate path.

fault coverage The percentage of faults detected against all possible faults or against all faults of a given type.

FC See Fibre Channel (FC).

Fibre Channel (FC) A set of standards for a serial I/O bus capable of transferring data between two ports at up to 100 megabytes/second, with standards proposals to go to higher speeds. Fibre Channel supports point to point, arbitrated loop, and switched topologies. Fibre Channel was completely developed through industry cooperation, unlike SCSI, which was developed by a vendor and submitted for standardization after the fact.

Fibre Channel switch A networking device that can send packets directly to a port associated with a given network address in a Fibre Channel storage area network (SAN). Fibre Channel switches are used to expand the number of servers that can connect to a particular storage port. Each switch is managed by its own management software.

field-replaceable unit (FRU) An assembly component that is designed to be replaced on site, without the system having to be returned to the manufacturer for repair.

FRU See field-replaceable unit (FRU).

HBA See host bus adapter (HBA).

host As a function of the Sun Storage 2500-M2 Arrays configuration, a representation of a data host that is mapped to initiators and volumes to create a storage domain. See also data host, initiator.

host bus adapter (HBA) An I/O adapter that connects a host I/O bus to a computer's memory system. Abbreviated HBA. Host bus adapter is the preferred term in SCSI contexts. Adapter and NIC are the preferred terms in Fibre Channel contexts. The term NIC is used in networking contexts such as Ethernet and token ring. See also initiator.

host group A group of hosts with common storage characteristics that can be mapped to volumes. See also host.

hot-spare The drive used by a controller to replace a failed disk. See also array hot-spare.

input/output module (IOM) A module in the expansion tray that monitors the status of the components. An IOM also serves as the connection point to transfer data between the expansion tray and the controller.

in-band traffic System management traffic that uses the data path between a host and a storage device. See also out-of-band traffic.

initiator A system component that initiates an I/O operation over a Fibre Channel (FC) or iSCSI Ethernet network. If so configured, each host connection within the network has the ability to initiate transactions with the storage array. Each host in the network represents a separate initiator, so if a host is connected to the system through two host bus adapters (HBAs) or NICs, the system identifies two different initiators (similar to multi-homed, Ethernet-based hosts). In contrast, when multipathing is used in round-robin mode, multiple HBAs or NICs are grouped together, and the multipathing software identifies the group as a single initiator.

IOPS A measure of transaction speed, representing the number of input and output transactions per second.

LAN Local area network.

logical unit number (LUN) The SCSI identifier for a volume as it is recognized by a particular host. The same volume can be represented by a different LUN to a different host.

LUN See logical unit number (LUN).

MAC address See media access control (MAC) address.

management host A Solaris host serving the configuration, management, and monitoring software for Sun Storage 2500-M2 Arrays. The software on the station can be accessed with a browser to run the browser interface or with a remote scripting command-line interface (CLI) client to access the `SSCS` CLI commands.

master / alternate master A design for reliability that uses redundant configuration. Array configurations share master/alternate master configurations: each array configuration has two controller trays that are grouped as one host. In each case, the master component uses the IP address and name. If the master fails, the alternate master assumes the IP address and name and takes over the master's functions.

media access control (MAC) address The physical address identifying an Ethernet controller board. The MAC address, also called an Ethernet address, is set at the factory and must be mapped to the IP address of the device.

mirroring A form of storage – also called RAID Level 1, independent copy, and real-time copy – whereby two or more independent, identical copies of data are maintained on separate media. Typical mirroring technologies enable the cloning of data sets to provide redundancy for a storage system.

multipathing A design for redundancy that provides at least two physical paths to a target.

out-of-band traffic System management traffic outside of the primary data path that uses an Ethernet network. See also in-band traffic.

PDU See power distribution unit (PDU).

pool See storage pool.

power distribution unit (PDU) The assembly that provides power management for the system. The redundant design uses two PDUs in each system so that the system's data path continues to function if one of the PDUs fails.

profile See storage profile.

provisioning The process of allocation and assignment of storage to hosts.

RAID An acronym for Redundant Array of Independent Disks, a family of techniques for managing multiple disks to deliver desirable cost, data availability, and performance characteristics to host environments. Also, a phrase adopted from the 1988 SIGMOD paper A Case for Redundant Arrays of Inexpensive Disks.

remote monitoring Monitoring of the functions and performance of a hardware system from a location other than where the hardware resides.

remote scripting CLI client A command-line interface (CLI) that enables you to manage the system from a remote management host. The client communicates with the management software through a secure out-of-band interface, HTTPS, and provides the same control and monitoring capability as the browser interface. The client must be installed on a host that has network access to the system.

SAN See storage area network (SAN).

site LAN The local area network at your site. When the system is connected to your LAN, the system can be managed through a browser from any host on the LAN.

Small Form-factor Pluggable (SFP) transceiver A component that enables Fibre Channel duplex communication between storage array devices. SFP transceivers can be inserted into host bus adapters (HBAs), controllers, and input/output modules (IOMs). SFP transceivers can support either copper cables (the SFP transceiver is integrated with the cable) or fiber-optic cables (the SFP transceiver is a separate component from the fiber-optic cable).

snapshot An copy of a volume's data at a specific point in time.

SSCS Sun Storage Command System. The command-line interface (CLI) that can be used to manage the array.

storage area network (SAN) An architecture in which the storage elements are connected to each other and to a server that is the access point for all systems that use the SAN to store data.

storage domain A secure container that holds a subset of the system's total storage resources. Multiple storage domains can be created to securely partition the system's total set of storage resources. This enables you to organize multiple departments or applications into a single storage management infrastructure.

storage pool A container that groups physical disk capacity (abstracted as virtual disks in the browser interface) into a logical pool of available storage capacity. A storage pool's characteristics are defined by a storage profile. You can create multiple storage pools to segregate storage capacity for use in various types of applications (for example, high throughput and online transaction-processing applications).

storage profile A defined set of storage performance characteristics such as RAID level, segment size, dedicated hot-spare, and virtualization strategy. You can choose a predefined profile suitable for the application that is using the storage, or you can create a custom profile.

storage tray An enclosure containing disks. A tray with dual RAID controllers is called a controller tray; a tray without controllers is called an expansion tray.

stripe size The number of blocks in a stripe. A striped array's stripe size is the stripe depth multiplied by the number of member extents. A parity RAID array's stripe size is the stripe depth multiplied by one less than the number of member extents. See also striping.

striping Short for data striping; also known as RAID Level 0 or RAID 0. A mapping technique in which fixed-size consecutive ranges of virtual disk data addresses are mapped to successive array members in a cyclic pattern. (SNIA).

target The system component that receives a SCSI I/O command. (SNIA).

thin-scripting client See remote scripting CLI client.

tray See storage tray.

virtual disk A set of disk blocks presented to an operating environment as a range of consecutively numbered logical blocks with disk-like storage and I/O semantics. The virtual disk is the disk array object that most closely resembles a physical disk from the operating environment's viewpoint.

volume A logically contiguous range of storage blocks allocated from a single pool and presented by a disk array as a logical unit number (LUN). A volume can span the physical devices that constitute the array, or it can be wholly contained within a single physical disk, depending on its virtualization strategy, size, and the internal array configuration. The array controller makes these details transparent to applications running on the attached server system.

volume snapshot See snapshot.

WWN World Wide Name. A unique 64-bit number assigned by a recognized naming authority such as the Institute of Electrical and Electronics Engineers (IEEE) that identifies a connection (device) or a set of connections to the network. The World Wide Name (WWN) is constructed from the number that identifies the naming authority, the number that identifies the manufacturer, and a unique number for the specific connection.

Index

S

T

W