Tekelec EAGLE® 5
Integrated Signaling System

Release 35.1

Maintenance Manual

910-4495-001 Revision B
September 2006

TEKELEC

Copyright 2006 Tekelec.
All Rights Reserved
Printed in U.S.A.

Notice
Information in this documentation is subject to change without notice. Unauthorized use or copying of this documentation can result in civil or criminal penalties.

Any export of Tekelec products is subject to the export controls of the United States and the other countries where Tekelec has operations.

No part of this documentation may be reproduced or transmitted in any form or by any means, electronic or mechanical, including photocopying or recording, for any purpose without the express written permission of an authorized representative of Tekelec.

Other product names used herein are for identification purposes only, and may be trademarks of their respective companies.

RoHS 5/6 - As of July 1, 2006, all products that comprise new installations shipped to European Union member countries will comply with the EU Directive 2002/95/EC "RoHS" (Restriction of Hazardous Substances). The exemption for lead-based solder described in the Annex will be exercised. RoHS 5/6 compliant components will have unique part numbers as reflected in the associated hardware and installation manuals.

WEEE - All products shipped to European Union member countries comply with the EU Directive 2002/96/EC, Waste Electronic and Electrical Equipment. All components that are WEEE compliant will be appropriately marked. For more information regarding Tekelec's WEEE program, contact your sales representative.

Trademarks
The Tekelec logo, EAGLE, G-Flex, G-Port, IP^7, IP^{7}Edge, and TALI are registered trademarks of Tekelec. TekServer is a trademark of Tekelec. All other trademarks are the property of their respective owners.

Patents
This product is covered by one or more of the following U.S. and foreign patents:

U.S. Patent Numbers:

5,008,929, 5,953,404, 6,167,129, 6,324,183, 6,327,350, 6,456,845, 6,606,379, 6,639,981, 6,647,113, 6,662,017, 6,735,441, 6,745,041, 6,765,990, 6,795,546, 6,819,932, 6,836,477, 6,839,423, 6,885,872, 6,901,262, 6,914,973, 6,940,866, 6,944,184, 6,954,526, 6,954,794, 6,959,076, 6,965,592, 6,967,956, 6,968,048, 6,970,542

Ordering Information
For additional copies of this document, contact your sales representative.

Table of Contents

Chapter 1. Introduction

Overview 1-2
Scope and Audience 1-3
Related Publications 1-4
Documentation Set 1-4
Documentation Packaging, Delivery, and Updates 1-11
Documentation Admonishments 1-12
Customer Assistance 1-13
Customer Care Center 1-13
Emergency Response 1-13
Hardware Repair and Return 1-14
Repair and Return Shipping Instructions 1-15
Maintenance Strategy 1-18
Application Self Recovery 1-18
System Maintenance Software Intervention 1-18
Maintenance Personnel Intervention 1-19
System Maintenance Log 1-19
List of Acronyms and Abbreviations 1-21

Chapter 2. Preventive Maintenance

Introduction 2-3
Maintaining the Fuse and Alarm Panel 2-3
FAP Components 2-4
Alarms 2-8
Diode Testing and the Diode Jumper 2-9
MO Removable Cartridge Description 2-13
Removable Cartridge Handling Procedures 2-16
Inserting the MO Removable Cartridge 2-17
Removing the MO Removable Cartridge 2-17
Daily Procedures 2-18
Backup the Database (Daily) 2-18
System Reports Analysis 2-20
File Transfer for LNP and INP Measurements 2-21
Weekly Procedures 2-23

Database Archive (Weekly) 2-23
Printer Inspection 2-25
Remote Access Verification 2-26
Monthly Procedures 2-27
Database Archive (Monthly) 2-27
FAP Load Balance Verification (PN 870-0243-XX only) 2-28
Change the Fan Tray Filter 2-35
Change the Air Supply Filter 2-36
Cleaning Printer 2-38
Fuse Spares Inventory 2-39
Wrist Strap Test 2-40
Quarterly Procedures 2-41
Database Archive (Quarterly) 2-41
Preventing Dust Buildups 2-43
Rectifier Voltage Inspection/Recording 2-44
Semi-Annual Procedures 2-45
Spare Inventory Rotation 2-45

Chapter 3. Corrective Maintenance

Introduction 3-3
System Alarm Levels 3-4
Critical 3-4
Major 3-4
Minor 3-4
Trouble Detection 3-4
Audible Alarms 3-4
Visual Alarms 3-5
Event/Error Messages 3-9
IMT Bus States 3-10
IMT System Alarm Level Determination 3-10
Unsolicited Alarm Messages (UAM) 3-11
Unsolicited Information Messages (UIM) 3-27
Output Messages 3-38
Output Message Format 3-38
UAM/UIM Changes 3-40
EAGLE 5 ISS Release 33.0 UAM/UIM Changes 3-40
EAGLE 5 ISS Release 34.0 UAM/UIM Changes 3-45
EAGLE 5 ISS Release 34.3 UAM/UIM Changes 3-49

EAGLE 5 ISS Release 35.0 UAM/UIM Changes 3-50
EAGLE 5 ISS Release 35.1 UAM/UIM Changes 3-54
Alarm Clearing Procedures 3-54
Retrieve Trouble Report 3-55
Hourly Status Message Reports 3-56
Maintenance System Event Logs 3-60
Obituaries 3-62
Terminal Not Responding 3-63
Printer Not Working 3-65
Modem Not Working 3-68
Remove Removable Cartridge Stuck in Drive on MDAL 3-69
Link Maintenance 3-71
Link Fault Sectionalization 3-71
Link Maintenance Enhancements 3-77
Power Down of In-Service System 3-84
Power Up of the System 3-88
UAM and UIM Troubleshooting Procedures 3-89

Chapter 4. Measurements

Introduction 4-4
OAM Based Measurements 4-5
Measurements Platform 4-6
Report Parameters 4-12
Reports 4-13
STP System Totals (SYSTOT) Measurements 4-13
Component Measurements 4-25
Network Management Measurements 4-33
Daily Availability Measurements 4-41
Day-To-Hour Availability Measurements 4-44
Availability Measurements 4-46
Daily Maintenance Measurements 4-54
Day-to-Hour Maintenance Measurements 4-82
Hourly Maintenance Measurements 4-95
Gateway Measurements 4-111
Record Base Measurements 4-122
Maintenance Status Reports 4-129

Appendix A. Card Removal/Replacement Procedures

Introduction A-3
Administrative Procedures A-3
Maintenance Disk and Alarm (MDAL) Card Replacement A-3
MDAL, Maintenance Disk and Alarm Card A-4
General Purpose Service Module (GPSM-II) Card Replacement A-5
GPSM-II, General Purpose Service Module A-9
HIPR/HMUX Card Replacement A-10
HMUX, High-Speed Multiplexer A-15
Determine LIM, MIM, and MPL Changeout Time A-16
SS7 and IP7, LIM, MIM, HC-MIM and MPL Card Replacement A-17
DS0A-LIM, Digital Signal Level-0 Link Interface Module A-21
LIM-ATM, LIM-AINF, LIM-E1, LIM, EILA, ILA A-22
E1/T1 MIM, E1/T1 Multichannel Interface Module A-23
MPL LIM, Multi-Port Link Interface Module A-24
MPLT, Multi-Port LIM with Taxi Component A-25
X.25 Link Interface Module (LIM) A-27
Transaction Service Module (TSM) - SCCP A-30
Transaction Service Module (TSM) - GLS A-34
Database Services Module (DSM) - VSCCP A-36
Application Communications Module (ACM) A-39
ACM, Application Communication Module A-41
Database Communications Module (DCM) and EDCM/EDCM-A A-42
DCM, Database Communications Module;
DSM, Database Service Module A-45
EDCM and EDCM-A (Single-Slot), Enhanced Database
Communications Module (Single-Slot) A-46
TDM-GTI, Terminal Disk Module-Global Timing Interface A-55
Measurement Collection and Polling Module (MCPM) A-56
Replacing a Card in the EAGLE 5 ISS A-57
Replacing Cards in the Holdover Clock A-59
Failed Clock Input (CI) Card Replacement A-59
CI, Clock Interface Card, Holdover Clock A-60
Non-Failed Clock Input (CI) Card Replacement A-61
ST3 Card Replacement A-62
ST3, Stratum-3 Clock Card, Holdover Clock A-64
MIS Card Replacement A-65
MIS, Maintenance Interface System, Holdover Clock A-66

TOCA Card Replacement A-67
TOCA, Timing Output Composite Automatic, Holdover Clock A-69
MCA, Matrix Controller Assembly Card, Holdover Clock A-70
Fan Assembly A-71
Replace Fan Unit A-71
Replace Fan Controller Card A-72
Replace Fan Assembly A-72
EAGLE 5 ISS Replacement Parts List A-81
Replacement Cables List A-82

Appendix B. X.25/SS7 Message Conversion

Introduction B-2
Conversion from X.25 to SS7 ..... B-3
Conversion from SS7 to X.25 ..... B-5
Detailed Message Conversion B-5

Appendix C. Holdover Clock Troubleshooting Procedures

Introduction C-2
Interpreting System Alarms, Lamps And Trouble Isolation C-2

Appendix D. Unsolicited Output Message Groups

Introduction D-2

Appendix E. Auto-Inhibit HW Verification Codes

Introduction E-2

Appendix F. UAM Balancing Matrix

Introduction F-2
Alarms F-2
Card Alarms F-4
CDT (Customer Defined Trouble) Alarms F-6
Clock (Holdover Clock) Alarms F-7
Clock System Alarms F-7
DCM Alarms F-8
DLK Alarms F-8
DPC Alarms F-9
DPC System Alarms F-10
DSM Alarms F-11
E1 Port Alarms F-11
EIR Alarms F-12
EMAP Alarms F-12

EMAP (NDC) Alarms F-12
EROUTE Alarms F-13
Frame Alarms F-13
Fuse Alarms F-14
GLS Alarms F-14
GPL Alarms F-14
HS Clock System Alarms F-15
IMT Bus Alarms F-16
IMT System Alarms F-16
INP System Alarms F-16
IP7 Alarms F-17
IP TPS System Alarms F-17
IP7 System Alarms F-17
Linkset Alarms F-18
LNP System Alarms F-18
LSMS Connection Alarms F-19
LSMS System Alarms F-19
MCPM Alarms F-19
MEAS System Alarms F-20
MPS (ELAP/EPAP) Alarms F-20
MPS Alarm Support F-21
NDC System Alarms F-21
RTX System Alarms F-22
SCCP System Alarms F-22
SCCP Service Alarms F-23
SEAS OAP Alarms F-23
SEAS System Alarms F-24
SEAS X25 Alarms F-24
Security Log Alarm F-24
Security System Alarms F-25
SLK Alarms F-25
STPLAN Alarms F-28
System Alarms F-28
System GPL Alarms F-29
T1 Port Alarms F-29
Terminal Alarms F-29

Chapter G. Part Numbers

Overview G-2
Cables, Adapters G-3
Components G-7
Frames, Backplanes, FAPs, and Fans G-10
Labels G-12
Miscellaneous Parts G-13
Power Cords for Peripherals G-15

Index

List of Figures

Figure 2-1. FAP High-Level Block Diagram 2-4
Figure 2-2. Location of FAP Components 2-5
Figure 2-3. FAP Component Functions 2-6
Figure 2-4. 2.3 Gbyte Write Protected Removable Cartridge 2-14
Figure 2-5. 2.3 Gbyte Write Enabled Removable Cartridge 2-15
Figure 2-6. 2.3 Gbyte Removable Cartridge Drive Layout 2-16
Figure 2-7. Open Diode Example 2-31
Figure 2-8. Steady State Example 2-32
Figure 2-9. Fan Assembly 2-35
Figure 2-10. Fan Filter Replacement 2-37
Figure 3-1. MDAL Alarm LEDs 3-6
Figure 3-2. GMT Fuse 3-7
Figure 3-3. Fuse and Alarm Panel Front Layout (870-0243-xx) 3-8
Figure 3-4. Fuse and Alarm Panel Front Layout (870-1606-xx/870-2320-xx) 3-8
Figure 3-5. Format of Hourly Status Message Output 3-57
Figure 3-6. Push Inject/Eject Clamps Outward 3-69
Figure 3-7. Push in Inject/Eject Clamps 3-70
Figure 3-8. Signaling Link Network Connections 3-79
Figure 3-9. Card LEDs 3-189
Figure 3-10. Card LEDs 3-192
Figure 3-11. Card LEDs 3-197
Figure A-1. MDAL LEDs A-4
Figure A-2. GPSM-II A-9
Figure A-3. HIPR LEDs A-14
Figure A-4. HMUX LEDs A-15
Figure A-5. DS0A-LIM LEDs A-21
Figure A-6. LIM LEDs A-22
Figure A-7. E1/T1 MIM) A-23
Figure A-8. MPL LEDs A-24
Figure A-9. MPLT LEDs A-25
Figure A-10. HC MIM LEDs A-26
Figure A-11. TSM LEDs A-33

Figure A-12. ACM LEDs A-41
Figure A-13. DCM and DSM LEDs A-45
Figure A-14. EDCM and EDCM-A Single-Slot LEDs A-46
Figure A-15. TDM LED A-55
Figure A-16. Push Inject/Eject Clamps Outward A-57
Figure A-17. Push in Inject/Eject Clamps A-58
Figure A-18. Holdover Clock CI Card LEDs A-60
Figure A-19. Holdover clock ST3 card LEDs A-64
Figure A-20. Holdover Clock MIS Card LEDs A-66
Figure A-21. Holdover clock TOCA card LEDs A-69
Figure A-22. Holdover Clock MCA Card LEDs A-70
Figure A-23. Fan Unit Mounting Screws A-71
Figure A-24. Fan card with LEDs on front of fan assembly unit A-73
Figure A-25. Fan Assembly Rear Bracket Screws. A-74
Figure A-26. Fan Assembly A-75
Figure A-27. Fan tray inserted into fan tray bracket in the frame - front view A-75
Figure A-28. Tighten rear fan tray screws A-76
Figure A-29. Tighten fan side bracket screws A-77
Figure A-30. Fan card with LEDs on front of fan assembly A-78

List of Tables

Table 1-1. Basic RMA Types 1-15
Table 1-2. RMA Reasons for Return 1-15
Table 2-1. FAP Component Replacement 2-7
Table 2-2. FAP Alarm Conditions 2-8
Table 2-3. Additional Alarm Indicators 2-9
Table 2-4. FAP Part Numbers and Corresponding Procedures 2-9
Table 2-5. Tekelec Method of Procedure Test Record 2-34
Table 3-1. Fuse and Alarm Panel Front Items (P/N 804-0007-06) 3-8
Table 3-2. IMT Bus Alarm Levels 3-11
Table 3-3. Critical Alarm Messages 3-11
Table 3-4. Major Alarm Messages 3-13
Table 3-5. Minor Alarm Messages 3-18
Table 3-6. Information Alarm Messages 3-21
Table 3-7. Unsolicited Information Messages 3-27
Table 3-8. Remote Link Element types 3-71
Table 3-9. Link Fault Sectionalization Test Types 3-71
Table 3-10. Link Fault Sectionalization Test Patterns 3-72
Table 3-11. Hardware/Card/APPL LFS Support 3-73
Table 3-12. Link Fault Sectionalization Data Entry Parameters 3-75
Table 3-13. Link Fault Sectionalization Test Parameters 3-76
Table 3-14. Command Driven Loopback Support 3-78
Table 3-15. tst-slk Support 3-79
Table 3-16. tst-e1/tst-t1 Support 3-80
Table 3-17. Maintenance Activity Hierarchy 3-159
Table 3-18. Maintenance Activity Hierarchy 3-163
Table 3-19. Maximum Sockets/Associations per Card 3-358
Table 3-20. Maintenance Activity Hierarchy 3-389
Table 3-21. OAP Configuration Parameters 3-484
Table 3-22. SG Received Messages Discarded 3-1024
Table 3-23. SG Messages Discarded in the Transmit Path 3-1029
Table 4-1. Measurements Platform System Header 4-7
Table 4-2. Enabling 15-Minute Measurements - Impacts 4-11
Table 4-3. STP System Total STP Measurements 4-14

Table 4-4. STP System Total Translation Type Measurements 4-19
Table 4-5. Calling Party GTT Measurements 4-21
Table 4-6. STP System Total STPLAN Measurements 4-23
Table 4-7. HSL LSL Differences for Component Linksets 4-25
Table 4-8. Component Linkset Measurements 4-26
Table 4-9. HSL LSL Differences for Component Links 4-29
Table 4-10. Component Link Measurements 4-29
Table 4-11. Network Management STP Measurements 4-34
Table 4-12. HSL LSL Differences for Network Management Links 4-37
Table 4-13. Network Management Link Measurements 4-37
Table 4-14. Network Management Linkset Measurements 4-40
Table 4-15. Daily Availability Link Measurements 4-42
Table 4-16. Day-To-Hour Availability Link Measurements 4-44
Table 4-17. HSL LSL Differences for Availability Links 4-46
Table 4-18. Availability Link Measurements 4-47
Table 4-19. Availability STPLAN LIM Measurements 4-50
Table 4-20. Availability STPLAN TSM Measurements 4-51
Table 4-21. Availability STPLAN ACM Measurements 4-51
Table 4-22. Daily Maintenance STP Measurements 4-54
Table 4-23. HSL LSL Differences for Daily Maintenance Links 4-58
Table 4-24. Daily Maintenance Link Measurements 4-58
Table 4-25. Daily Maintenance Linkset Measurements 4-63
Table 4-26. Daily Maintenance LNP System Wide Measurements 4-64
Table 4-27. Daily Maintenance LNP Per SSP Measurements 4-65
Table 4-28. Daily Maintenance LNP LRN Measurements 4-66
Table 4-29. Daily Maintenance LNP NPA Measurements 4-67
Table 4-30. Daily Maintenance INP and G-Port System Wide Measurements 4-70
Table 4-31. Daily Maintenance INP and G-Port Per SSP Measurements 4-71
Table 4-32. Daily Maintenance STPLAN Measurements 4-74
Table 4-33. Daily Maintenance EIR Measurements 4-76
Table 4-34. Daily Maintenance MAP Screening System Wide Measurements 4-78
Table 4-35. Server Entity Identification 4-78
Table 4-36. Path Entity Identification 4-79
Table 4-37. Daily Maintenance MAP Screening Per Server Measurements 4-80

Table 4-38. Maintenance Day-to-Hour STP Measurements 4-82
Table 4-39. HSL LSL Differences for Maintenance Day-to-Hour Link Measurements 4-86
Table 4-40. Maintenance Day-to-Hour Link Measurements 4-87
Table 4-41. Maintenance Day-to-Hour Linkset Measurements 4-91
Table 4-42. Maintenance Day-to-Hour STPLAN Measurements 4-93
Table 4-43. Hourly Maintenance LNP System Wide Measurements 4-96
Table 4-44. Hourly Maintenance LNP Per SSP Measurements 4-96
Table 4-45. Hourly Maintenance LNP LRN Measurements 4-98
Table 4-46. Hourly Maintenance LNP NPA Measurements 4-98
Table 4-47. Hourly Maintenance INP and G-Port System Wide Measurements 4-102
Table 4-48. Hourly Maintenance INP and G-Port Per SSP Measurements 4-103
Table 4-49. Hourly Maintenance EIR Measurements 4-105
Table 4-50. Hourly Maintenance MAP Screening System Wide Measurements 4-106
Table 4-51. Server Entity Identification 4-107
Table 4-52. Path Entity Identification 4-108
Table 4-53. Hourly Maintenance MAP Screening Per Server Measurements 4-109
Table 4-54. Gateway STP Measurements 4-111
Table 4-55. Gateway ORIGNI Measurements 4-113
Table 4-56. Gateway ORIGNINC Measurements 4-114
Table 4-57. Gateway Linkset Measurements 4-116
Table 4-58. Gateway LSDESTNI Measurements 4-118
Table 4-59. Gateway LSORGINI Measurements 4-119
Table 4-60. Gateway LSONISMT Measurements 4-121
Table 4-61. Record Base STP Measurements 4-123
Table 4-62. Record Base Linkset Measurements 4-126
Table 4-63. Record Base Link Measurements 4-127
Table 4-64. Maintenance Status Link Measurements 4-130
Table 4-65. Maintenance Status Linkset Measurements 4-133
Table A-1. DCM Card Locations A-42
Table B-1. Detailed Message Conversion B-5
Table C-1. Input and ST3 Alarm Conditions C-3
Table C-2. Input and ST3 Corrective Actions C-4

Table C-3. Shelf and Output Alarm Conditions - Not Related to Input and ST Conditions C-5
Table C-4. Shelf and Output Corrective Actions - Not Related to Input and ST Conditions C-8
Table D-1. System Maintenance Unsolicited Output Message Groups D-3
Table D-2. Link Maintenance Unsolicited Output Message Group D-7
Table D-3. Card Unsolicited Output Message Group D-13
Table D-4. Application Subsystem Unsolicited Output Message Group D-16
Table D-5. GTT Unsolicited Output Message Group D-20
Table D-6. GWS Unsolicited Output Message Group D-23
Table D-7. Clock Unsolicited Output Message Group D-24
Table D-8. Measurements Maintenance Unsolicited Output Message Group D-26
Table D-9. LNP Database Unsolicited Output Message Group D-27
Table D-10. Security Administration Unsolicited Output Message Group D-27
Table D-11. Program Update Unsolicited Output Message Group D-28
Table D-12. UIM Redirect Unsolicited Output Message Group D-28
Table D-13. Database Unsolicited Output Message Group D-28
Table D-14. MPS Unsolicited Output Message Group D-28
Table D-15. Monitor Unsolicited Output Message Group D-29
Table D-16. SLAN Maintenance Unsolicited Output Message Group ... D-30
Table D-17. SEAS Maintenance Unsolicited Output Message Group D-30
Table E-1. Hardware Verification Codes E-2
Table F-1. Card Alarms F-4
Table F-2. CDT (Customer Defined Trouble) Alarms F-6
Table F-3. Clock (Holdover) Alarms F-7
Table F-4. Clock System Alarms F-7
Table F-5. DCM Alarms F-8
Table F-6. DLK Alarms F-8
Table F-7. DPC Alarms F-9
Table F-8. DPC System Alarms F-10
Table F-9. DSM Alarms F-11
Table F-10. E1 Port Alarms F-11
Table F-11. EIR Alarms F-12
Table F-12. EMAP Alarms F-12
Table F-13. EMAP (NDC) Alarms F-12

Table F-14. EROUTE Alarms F-13
Table F-15. Frame Alarms F-13
Table F-16. Fuse Alarms F-14
Table F-17. GLS Alarms F-14
Table F-18. GPL Alarms F-14
Table F-19. HS Clock System Alarms F-15
Table F-20. IMT Bus Alarms F-16
Table F-21. IMT System Alarms F-16
Table F-22. INP System Alarms F-16
Table F-23. IP Connection Alarms F-17
Table F-24. IP TPS System Alarms F-17
Table F-25. IP7 System Alarms F-17
Table F-26. Linkset Alarms F-18
Table F-27. LNP System Alarms F-18
Table F-28. LSMS Connection Alarms F-19
Table F-29. LSMS System Alarms F-19
Table F-30. MCPM Alarms F-19
Table F-31. MEAS System Alarms F-20
Table F-32. MPS (ELAP/EPAP) Alarms F-20
Table F-33. MPS Alarm Support F-21
Table F-34. NDC System Alarms F-21
Table F-35. RTX System Alarms F-22
Table F-36. SCCP System Alarms F-22
Table F-37. SCCP Service Alarms F-23
Table F-38. SEAS OAP Alarms F-23
Table F-39. SEAS System Alarms F-24
Table F-40. SEAS X25 Alarms F-24
Table F-41. Security Log Alarms F-24
Table F-42. Security System Alarms F-25
Table F-43. SLK Alarms F-25
Table F-44. STPLAN Alarms F-28
Table F-45. System Alarms F-28
Table F-46. System GPL Alarms F-29
Table F-47. T1 Port Alarms F-29
Table F-48. Terminal Alarms F-29
Table F-49. X-LIST Alarms F-29
Table G-1. EAGLE 5 ISS Cables, Connectors, and Power Cords G-3

Table G-2. EAGLE 5 ISS Components G-7
Table G-3. Frames, Backplanes, FAPs, and Fans G-10
Table G-4. Labels G-12
Table G-5. Miscellaneous Part Numbers G-13
Table D-1. Power Cords for Peripherals G-15

1

Introduction

Contents ..... Page

Overview 1-2

Scope and Audience 1-3

Related Publications 1-4

Documentation Packaging, Delivery, and Updates 1-11

Documentation Admonishments 1-12

Customer Assistance 1-13

- Customer Care Center 1-13
- Emergency Response 1-13

Hardware Repair and Return 1-14

- Repair and Return Shipping Instructions 1-15

Maintenance Strategy 1-18

- Application Self Recovery 1-18
- System Maintenance Software Intervention 1-18
- Maintenance Personnel Intervention 1-19

System Maintenance Log 1-19

List of Acronyms and Abbreviations 1-21

Overview

The *Maintenance Manual* contains procedural information required for maintaining the Eagle 5 ISS system, and the Multi-Purpose Server (MPS) with the Netra servers or TekServer platforms. For replacement and removal of EOAP cards refer to the *System Manual - EOAP*. The *Maintenance Manual* provides preventive and corrective maintenance procedures used in maintaining the different systems. Corrective procedures are listed by message reference number (MRN). The *Maintenance Manual* is being reissued to accurately reflect changes for the new features and procedures since the last release.

WARNING: Be sure to wear a wrist strap connected to the wrist strap grounding point of the EAGLE 5 Integrated Signaling System (ISS) before performing any maintenance procedures on the EAGLE 5 ISS.

The chapters are organized in such a way that information can be easily located. The manual is organized as follows:

- Chapter 1, "Introduction" provides general information about the organization of this manual, a description of the EAGLE 5 ISS maintenance strategy and list of acronyms and abbreviations.
- Chapter 2, "Preventive Maintenance" provides recommended scheduled routines for the EAGLE 5 ISS.
- Chapter 3, "Corrective Maintenance" provides the procedures to use in response to all system alarms, indicators and output messages displayed by the EAGLE 5 ISS.
- Chapter 4, "Measurements" describes traffic measurements used in the EAGLE 5 ISS.

In addition, these appendices provide useful reference material for maintenance, diagnostic, and troubleshooting activities.

- Appendix A, “Card Removal/Replacement Procedures”
- Appendix B, “X.25/SS7 Message Conversion”
- Appendix C, “Holdover Clock Troubleshooting Procedures”
- Appendix D, “UAM Balancing Matrix”
- Appendix E, “Auto-Inhibit HW Verification Codes”
- Appendix F, “UAM Balancing Matrix”
- Appendix G, “Part Numbers”

NOTE: EAGLE 5 ISS supporting ANSI networks make use of the LNP and SEAS features. EAGLE 5 ISS supporting ITU networks do not include these systems.

Scope and Audience

This manual is intended for maintenance personnel who must maintain the EAGLE 5 ISS. The technician should be familiar with SS7 protocols. The manual provides preventive and corrective procedures that will aid maintenance personnel in maintaining the EAGLE 5 ISS.

Preventive maintenance procedures are routines to be carried out on a scheduled basis to help prevent system failures. These routines are industry-standard recommendations, and may be adopted to fit any company maintenance plan.

The corrective maintenance procedures are those used in response to a system alarm or output message. These procedures are EAGLE 5 ISS-specific, and aid in the detection, isolation and repair of faults.

Related Publications

The ***Maintenance Manual*** is part of the EAGLE 5 ISS documentation set and may refer to one or more of the manuals listed below in the documentation set.

Documentation Set

The following manuals and documents comprise the documentation set for EAGLE 5 ISS Release 35.0. The list is sorted by manual name and is followed by a brief description of each manual.

NOTE: The most current update of each manual can be found on Tekelec's Customer Support website.

- *Commands Error Recovery Manual*
- *Commands Manual*
- *Commands Pocket Guide*
- *Commands Quick Reference Guide*
- *Database Administration Manual – Features*
- *Database Administration Manual – Gateway Screening*
- *Database Administration Manual – Global Title Translation*
- *Database Administration Manual – IP7 Secure Gateway*
- *Database Administration Manual – SEAS*
- *Database Administration Manual – SS7*
- *Database Administration Manual – System Management*
- *Dimensioning Guide for EPAP Advanced DB Features*
- *ELAP Administration Manual*
- *EPAP Administration Manual*
- *EPAP DSM Dimensioning Tool*
- *Feature Manual - ECAP*
- *Feature Manual – EIR*
- *Feature Manual – G-Flex C7 Relay*
- *Feature Manual – G-Port*
- *Feature Manual – INP*
- *FTP-Based Table Retrieve Application (FTRA) User Guide*
- *Hardware Manual – EAGLE 5 ISS*

- *Hardware Manual – Tekelec 1000 Application Server*
- *Hardware Manual – Tekelec 1100 Application Server*
- *Installation Manual – EAGLE 5 ISS*
- *Installation Manual - Integrated Applications*
- *LNP Database Synchronization (LSMS with EAGLE 5 ISS)*
- *LNP Feature Activation Guide*
- *Maintenance Manual*
- *Maintenance Pocket Guide*
- *Maintenance Emergency Recovery Pocket Guide*
- *MPS Platform Software and Maintenance Manual (EAGLE 5 ISS with Tekelec 1000 Application Server)*
- *MPS Platform Software and Maintenance Manual (EAGLE 5 ISS with Tekelec 1100 Application Server)*
- *Previously Released Features Manual*
- *Provisioning Database Interface Manual*
- *Release Documentation*
  - *Feature Notice - EAGLE 5 ISS 35.0*
  - *Feature Notice - ELAP 6.0*
  - *Feature Notice - EPAP 7.0*
  - *Master Glossary*
  - *Master Index*
  - *Release Notice (online only)*
  - *System Overview*
- *System Manual – EOAP*

Commands Error Recovery Manual

The *Commands Error Recovery Manual* contains the procedures to resolve error message conditions generated by the commands in the *Commands Manual*. These error messages are presented in numerical order.

Commands Manual

The *Commands Manual* contains procedures for logging into an EAGLE 5 ISS system, logging out of the system, a general description of the terminals, printers, the disk drive used on the system, and a description of all the commands used in the system.

Commands Pocket Guide

The *Commands Pocket Guide* is an abridged version of the *Commands Manual*. It contains all commands and parameters, and it shows the command-parameter syntax.

Commands Quick Reference Guide

The *Commands Quick Reference Guide* contains an alphabetical listing of the commands and parameters. The guide is sized to fit a shirt-pocket.

Database Administration Manual – Features

The *Database Administration Manual – Features* contains procedural information required to configure an EAGLE 5 ISS to implement these features: X.25 Gateway, STP LAN, Database Transport Access, GSM MAP Screening, and EAGLE 5 Integrated Monitoring Support.

Database Administration Manual – Gateway Screening

The *Database Administration Manual - Gateway Screening* contains a description of the Gateway Screening (GWS) feature and the procedures necessary to configure the EAGLE 5 ISS to support this feature.

Database Administration Manual – Global Title Translation

The *Database Administration Manual – Global Title Translation* contains procedural information required to configure an EAGLE 5 ISS to implement these features: Global Title Translation, Enhanced Global Title Translation, Variable Length Global Title Translation, Interim Global Title Modification, Flexible GTT Load Sharing, Origin-based SCCP Routing, and ANSI-ITU-China SCCP Conversion Intermediate GTT Load Sharing.

Database Administration Manual – IP^7 Secure Gateway

This manual contains procedural information required to configure the EAGLE 5 ISS to implement the SS7-IP Gateway.

Database Administration Manual – SEAS

The *Database Administration Manual – SEAS* contains the EAGLE 5 ISS configuration procedures that can be performed from the Signaling Engineering and Administration Center (SEAC) or a Signaling Network Control Center (SNCC). Each procedure includes a brief description of the procedure, a flowchart showing the steps required, a list of any EAGLE 5 ISS commands that may be required for the procedure but that are not supported by SEAS, and a reference to optional procedure-related information, which can be found in one of these manuals:

- Database Administration Manual – Gateway Screening
- Database Administration Manual – Global Title Translation
- Database Administration Manual – SS7

Database Administration Manual – SS7

The *Database Administration Manual – SS7* contains procedural information required to configure an EAGLE 5 ISS to implement the SS7 protocol.

Database Administration Manual – System Management

The *Database Administration Manual – System Management* contains procedural information required to manage the EAGLE 5 ISS's database and GPLs, and to configure basic system requirements such as user names and passwords, system-wide security requirements, and terminal configurations.

Dimensioning Guide for EPAP Advanced DB Features

The *Dimensioning Guide for EPAP Advanced DB Features* is used to provide EPAP planning and dimensioning information. This manual is used by Tekelec personnel and EAGLE 5 ISS customers to aid in the sale, planning, implementation, deployment, and upgrade of EAGLE 5 ISS systems equipped with one of the EAGLE 5 ISS EPAP Advanced Database (EADB) Features.

ELAP Administration Manual

The *ELAP Administration Manual* defines the user interface to the EAGLE 5 ISS LNP Application Processor on the MPS/ELAP platform. The manual defines the methods for accessing the user interface, menus, screens available to the user and describes their impact. It provides the syntax and semantics of user input, and defines the output the user receives, including information and error messages, alarms, and status.

EPAP Administration Manual

The *EPAP Administration Manual* describes how to administer the EAGLE 5 ISS Provisioning Application Processor on the MPS/EPAP platform. The manual defines the methods for accessing the user interface, menus, and screens available to the user and describes their impact. It provides the syntax and semantics of user input and defines the output the user receives, including messages, alarms, and status.

Feature Manual - ECAP

The *Feature Manual - ECAP* provides instructions and information on how to install, use, and maintain the Integrated Accounting Feature Application feature on the Eagle Collector Application Processor (ECAP). This feature collects raw MSU data from the EAGLE 5 ISS, categorizes the data into groups, and feeds those groups to another system for accounting activities. Additional features will be added to this manual at a later date.

Feature Manual – EIR

The *Feature Manual - EIR* provides instructions and information on how to install, use, and maintain the EIR feature on the Multi-Purpose Server (MPS) platform of the EAGLE 5 ISS. The feature provides network operators with the capability to prevent stolen or disallowed GSM mobile handsets from accessing the network.

Feature Manual – G-Flex C7 Relay

The *Feature Manual - G-Flex C7 Relay* provides an overview of a feature supporting the efficient management of Home Location Registers in various networks. This manual gives the instructions and information on how to install, use, and maintain the G-Flex feature on the Multi-Purpose Server (MPS) platform of the EAGLE 5 ISS.

Feature Manual – G-Port

The *Feature Manual - G-Port* provides an overview of a feature providing the capability for mobile subscribers to change the GSM subscription network within a portability cluster while retaining their original MSISDNs. This manual provides instructions and information on how to install, use, and maintain the G-Port feature on the Multi-Purpose Server (MPS) platform of the EAGLE 5 ISS.

Feature Manual – INP

The *Feature Manual - INP* provides the user with information and instructions on how to implement, utilize, and maintain the INAP-based Number Portability (INP) feature on the Multi-Purpose Server (MPS) platform of the EAGLE 5 ISS.

FTP-Based Table Retrieve Application (FTRA) User Guide

The *FTP-Based Table Retrieve Application (FTRA) User Guide* describes how to set up and use a PC to serve as the offline application for the EAGLE 5 ISS FTP Retrieve and Replace feature.

Hardware Manual – EAGLE 5 ISS

The *Hardware Manual – EAGLE 5 ISS* contains hardware descriptions and specifications of Tekelec's signaling products. These include the EAGLE 5 ISS system, OEM-based products which include the AS*i* 4000 Service Control Point (SCP), the Netra-based Multi-Purpose Server (MPS), and the Integrated Sentinel with Extended Services Platform (ESP) subassembly.

The Hardware Manual provides an overview of each system and its subsystems, details of standard and optional hardware components in each system, and basic site engineering. Refer to this manual to obtain a basic understanding of each type of system and its related hardware, to locate detailed information about hardware components used in a particular release, and to help configure a site for use with the system hardware.

Hardware Manual – Tekelec 1000 Application Server

The *Hardware Manual - Tekelec 1000 Application Server* provides general specifications and a description of the Tekelec 1000 Applications Server (T1000 AS). This manual also includes site preparation, environmental and other requirements, procedures used to physically install the Tekelec 1000 AS, and troubleshooting and repair of Field Replaceable Units (FRUs).

Hardware Manual – Tekelec 1100 Application Server

The *Hardware Manual - Tekelec 1100 Application Server* provides general specifications and a description of the Tekelec 1100 Applications Server (T1100 AS). This manual also includes site preparation, environmental and other requirements, procedures used to physically install the Tekelec 1100 AS, and troubleshooting and repair of Field Replaceable Units (FRUs).

Installation Manual – EAGLE 5 ISS

The *Installation Manual - EAGLE 5 ISS* contains cabling requirements, schematics, and procedures used for installing the EAGLE 5 ISS along with LEDs, Connectors, Cables, and Power Cords to Peripherals. Refer to this manual to install components or the complete systems.

Installation Manual - Integrated Applications

The *Installation Manual - Integrated Applications* provides the installation information for integrated applications such as EPAP 4.0 or earlier (Netra-based Multi-Purpose Server (MPS) platform) and Sentinel. The manual includes information about frame floors and shelves, LEDs, connectors, cables, and power cords to peripherals. Refer to this manual to install components or the complete systems.

LNP Database Synchronization (LSMS with EAGLE 5 ISS)

The *LNP Database Synchronization Manual - LSMS/EAGLE 5 ISS* describes how to keep the LNP databases at the LSMS and at the network element (the EAGLE 5 ISS is a network element) synchronized through the use of resynchronization, audits and reconciles, and bulk loads. This manual is contained in both the LSMS documentation set and in the EAGLE 5 ISS documentation set.

LNP Feature Activation Guide

The *LNP Feature Activation Guide* contains procedural information required to configure the EAGLE 5 ISS for the LNP feature and to implement these parts of the LNP feature on the EAGLE 5 ISS:

- LNP services
- LNP options
- LNP subsystem application
- Automatic call gapping

- Triggerless LNP feature
- Increasing the LRN and NPANXX Quantities on the EAGLE 5 ISS
- Activating and Deactivating the LNP Short Message Service (SMS) feature.

Maintenance Manual

The *Maintenance Manual* contains procedural information required for maintaining the EAGLE 5 ISS system and the IP^7 Secure Gateway system. The *Maintenance Manual* provides preventive and corrective maintenance procedures used to maintain the different systems.

Maintenance Pocket Guide

The *Maintenance Pocket Guide* is an abridged version of the *Maintenance Manual* and contains all the corrective maintenance procedures used to maintain the EAGLE 5 ISS.

Maintenance Emergency Recovery Pocket Guide

The *Maintenance Emergency Recovery Pocket Guide* is an abridged version of the Maintenance Manual and contains the corrective maintenance procedures used for critical and major alarms generated on the EAGLE 5 ISS.

MPS Platform Software and Maintenance Manual (EAGLE 5 ISS with Tekelec 1000 Application Server)

The *EAGLE 5 ISS with Tekelec T1000 Application Server* describes the platform software for the Multi-Purpose Server (MPS) based on the Tekelec 1000 Application Server (T1000 AS) and describes how to perform preventive and corrective maintenance for the T1000 AS-based MPS. This manual should be used with the ELAP-based application (LNP).

MPS Platform Software and Maintenance Manual (EAGLE 5 ISS with Tekelec 1100 Application Server)

The *EAGLE 5 ISS STP with Tekelec T1100 Application Server* describes the platform software for the Multi-Purpose Server (MPS) based on the Tekelec 1100 Application Server (T1100 AS). This manual describes how to perform preventive and corrective maintenance for the T1100 AS-based MPS. This manual should be used with the EPAP-based applications (EIR, G-Port, G-Flex, and INP).

Previously Released Features Manual

The *Previously Released Features Manual* summarizes the features of previous EAGLE, EAGLE 5 ISS, and IP^7 Secure Gateway releases, and it identifies the release number of their introduction.

Provisioning Database Interface Manual

The *Provisioning Database Interface Manual* defines the programming interface that populates the Provisioning Database (PDB) for the EAGLE 5 ISS features supported on the MPS/EPAP platform. The manual defines the provisioning messages, usage rules, and informational and error messages of the interface. The customer uses the PDBI interface information to write his own client application to communicate with the MPS/EPAP platform.

Release Documentation

The *Release Documentation* is a release-specific compilation of the following documents:

- *Feature Notice* - Describes the features contained in the specified release; also provides the hardware baseline, describes the customer documentation set, provides information about customer training, and explains how to access the Customer Support website.
- *Master Glossary* - Contains an alphabetical listing of terms, acronyms, and abbreviations relevant to the system.
- *Master Index* - Lists all index entries used throughout the documentation set.
- *Release Notice* - Describes the changes made to the system during the lifecycle of a release. The final Release Notice provides a list of Generic Program Loads (GPLs), PRs resolved in a build, and all known PRs.

  NOTE: The *Release Notice* is maintained solely on Tekelec's Customer Support Website to provide you with instant access to the most up-to-date release information.

- *System Overview* - Provides high-level information on SS7, the IP^7 Secure Gateway, system architecture, LNP, and EOAP.

System Manual – EOAP

The *System Manual – EOAP* describes the Embedded Operations Support System Application Processor (EOAP) and provides the user with procedures on how to implement the EOAP, replace EOAP-related hardware, device testing and basic troubleshooting information.

Documentation Packaging, Delivery, and Updates

Customer documentation is provided with each system in accordance with the contract agreements. Customer documentation is upgraded whenever significant changes that affect system operation or configuration are made. Customer documentation updates may be issued in the form of an addendum or as a reissue of the affected documentation.

The document part number is shown on the title page along with the current revision of the document, the date of publication, and the software release that the document covers. The bottom of each page contains the document part number and the date of the publication.

Two types of releases are major software releases and maintenance releases. Maintenance releases are issued as addenda with a title page and change bars. On the changed pages, the date and document part number are changed. On any unchanged pages that accompany the changed pages, the date and the document part number are changed.

In the event a software release has minimum effect on documentation, an addendum is provided. The addendum provides an instruction page, a new title page, a change history page, and replacement chapters bearing the date of publication, the document part number, and change bars.

If a new release has a major impact on documentation, such as a new feature, the entire documentation set is reissued with a new part number and a new release number.

Documentation Admonishments

Admonishments are icons and text that may appear in this and other and LSMS manuals that alert the reader to assure personal safety, to minimize possible service interruptions, and to warn of the potential for equipment damage. Following are the admonishments, listed in descending order of priority.

	DANGER: (This icon and text indicate the possibility of ***personal injury***.)
	WARNING: (This icon and text indicate the possibility of ***equipment damage***.)
	CAUTION: (This icon and text indicate the possibility of ***service interruption***.)

Customer Assistance

The Tekelec Customer CareCenter offers a point of contact through which customers can receive support for problems. The Tekelec Customer Care Center is staffed with highly-trained engineers to provide solutions to technical questions and issues seven days a week, twenty-four hours a day. A variety of service programs are available through the Tekelec Customer Care Center to maximize the performance of Tekelec products that meet and exceed customer needs.

Customer Care Center

To receive technical assistance, call the Customer Care Center at one of the following locations:

- Tekelec, Europe

  Phone +44 1784 467 804

- Tekelec, UK

  Phone +44 1784 467 804

  Fax +44 1784 477 120

  E-mail ecsc@tekelec.com

- Tekelec, USA

  Phone (within the continental US) 888-367-8552 (888-FOR-TKLC)
  (outside the continental US) +1 919-460-2150.

  Fax 919-460-2126

Or you can request assistance by way of electronic mail at **support@tekelec.com**.

When your call is received, Technical Services issues a Customer Service Report (CSR). Each CSR includes an individual tracking number. When a CSR is issued, Technical Services determines the classification of the trouble. The CSR contains the serial number of the system, problem symptoms, and messages. Technical Services assigns the CSR to a primary engineer, who will work to solve the problem. Technical Services closes the CSR when the problem is resolved.

If a critical problem exists, Technical Services initiates emergency procedures (see the following topic, “Emergency Response”).

Emergency Response

In the event of a critical service situation, emergency response is offered by Tekelec Technical Services twenty-four hours a day, seven days a week. The emergency response provides immediate coverage, automatic escalation, and other features to ensure that the critical situation is resolved as rapidly as possible.

A critical situation is defined as a problem with an EAGLE 5 ISS that severely affects service, traffic, or maintenance capabilities, and requires immediate corrective action. Critical problems affect service and/or system operation resulting in:

- A total system failure that results in loss of all transaction processing capability
- Significant reduction in system capacity or traffic handling capability
- Loss of the system's ability to perform automatic system reconfiguration
- Inability to restart a processor or the system
- Corruption of system databases that requires service affecting corrective actions
- Loss of access for maintenance or recovery operations
- Loss of the system ability to provide any required critical or major trouble notification

Any other problem severely affecting service, capacity/traffic, billing, and maintenance capabilities may be defined as critical by prior discussion and agreement with Tekelec Technical Services.

Hardware Repair and Return

Any system components being returned for repair or replacement must be processed through the Tekelec Return Material Authorization (RMA) procedures. A hardware repair is defined as an item returned to Tekelec due to a failure, with the returned item being repaired and returned to the customer. It is essential that serial numbers are recorded correctly. RMA's cannot be created without a valid serial number. All repair and quality information is tracked by serial number. Table 1-1 lists the basic RMA types. Table 1-2 lists the RMA return reasons.

Table 1-1. Basic RMA Types

Replacement Type	Description	Turnaround
Priority Advance Replacement	Customer requests the URGENT replacement of a damaged product	Same Day Shipment
Advance Replacement	Customer request the replacement of a damaged product	Shipment Within 3 Business Days
Repair / Return	Customer will return a damaged product for repair	Shipment Within 5 Days After Receipt
Expendable	A damaged part, such as a cable, is replaced, but the Customer does not return the damaged product	Depends on Urgency - Shipment Within 3 Business Days

Table 1-2. RMA Reasons for Return

Reason for Return	Description
Damaged by Environment	Product damaged by environmental phenomena such as water damage or earthquake
Damaged in Shipment	Damaged between shipment from Tekelec and receipt at the Customer's installation site.
DOA – Dead on Arrival	Product is not functional when it is first installed at the Customer's location.
Lab Return	Products returned from lab sites.
Product Capture	Defect to be captured by Quality or Engineering (not Product Recall).
Product Deficiency	Anything wrong with the part that doesn't fall into another category.
Product Recall	Products recalled by divisions for the repair of a defect or replacement of defective products.
Return – No Product Deficiency	Anything returned without the product being defective.

Repair and Return Shipping Instructions

All returned equipment, assemblies, or subassemblies must be shipped to the Tekelec Repair and Return Facility specified by the Technical Services engineer. The item being returned must be shipped in the original carton or in an equivalent container assuring proper static handling procedures and with the freight charges prepaid.

The assigned RMA number must be clearly printed on the "RMA#:" line of the shipping label on the outside of the shipping package. If the RMA number is not placed on the label, the return could be delayed.

Procedure- RMA

1 Obtain and confirm the following information before contacting the Tekelec Customer Care Center:

- Your name:
- Company name:
- Call-back number:
- Email address:
- Which product you are calling about?
- Site location:
- CLLI number
- System serial number (NT, CE, LM, DS, etc…):
- Complete software release (e.g., 33.0.1-41.53.0):
- Upgrade forms
  WI005153
  WI005154
  WI005218
  WI005219
  WI005220
- Tekelec card type: (e.g., ILA, MPL, DSM, etc):
- Tekelec card part number (870-####-##):
- Associated serial number (102########):
- Reason for return or replacement (isolated from system):
- Full name of person the replacement card is being shipped to:
- Shipping address:

NOTE: If possible, include associated alarms (UAMs) and a copy of the associated output (capture file).

2 Contact the Contact Customer Care Center and request a Return of Material Authorization (RMA).

Reference: “Customer Care Center” on page 1-13.

3 If the item is a like-for-like advance replacement, the Technical Services engineer arranges for shipment of the replacement item to the customer.

a Wait for the replacement component to arrive.

b Package the defective component in the box of materials you received with your replacement. Use proper static handling procedures.

c Label the outside and inside of the box with your RMA number clearly visible. Place the packing slip from the received replacements on the inside of your box.

d Ship the defective component to the return address listed on the packing slip.

---

4 If the item is a repair/return, the Technical Services engineer arranges for shipment of the replacement item to the customer.

a Package the defective component in a suitable package for shipping. Use proper static handling procedures.

b Label the outside and inside of the box with your RMA number clearly visible. Include a packing slip with all the information from Step 1 along with the RMA number.

c Ship the defective component to the following address:

TEKELEC

Attn: RMA Department

5200 Paramount Parkway

Morrisville, NC 27560

RMA#: <assigned by Tekelec>

d Wait for the repaired component to arrive.

Maintenance Strategy

The EAGLE 5 ISS is equipped with an automated surveillance system, which allows many failures to be detected and repaired autonomously. When trouble is detected, and its cause determined, the system software attempts to isolate the trouble and recover itself through reinitialization. Because of the use of distributed processing throughout the system, the reinitialization can be localized with little or no impact on the rest of the system or network.

If the system software is unable to correct the problem, an output message is generated and maintenance personnel are provided with equipment location, nature of the trouble, and alarm severity.

There are three levels of recovery in the EAGLE 5 ISS:

- Application self recovery
- System maintenance software intervention
- Maintenance personnel intervention.

Application Self Recovery

This is the most desirable method of recovery, as it is nearly transparent to the network, and does not require any system resources. Examples of applications capable of self recovery:

- Link failure
- Link set failure
- Route failure
- Interprocessor message transport (IMT) bus failure.

Failure of a link relies on SS7 maintenance to correct the trouble. This usually entails placing the link out of service (OOS), re-aligning the link, then placing the link back in service.

Route failures also rely on SS7 maintenance. Transfer restricted (TFR) and transfer prohibited (TFP) are commonly used to reroute messages around a node.

System Maintenance Software Intervention

The system maintenance software operates at two levels, maintenance and administration subsystem (MAS) and application subsystem (SS7, X.25, GLS, DTA, and STPLAN). All troubles detected at the application level are reported to the maintenance and administration subsystem (MAS), which is responsible for generating system alarms and output messages.

Refer to the *Release Documentation* for more detailed information on system software and maintenance.

Maintenance Personnel Intervention

Maintenance personnel intervention is required when hardware fails, or when software is unable to recover. There are few occurrences of maintenance that would require maintenance personnel intervention. Examples include:

- Blown fuses
- Loss of power (Note: Maintenance personnel intervention is required to restore the power. Once power is restored, the EAGLE 5 ISS recovers automatically.)
- Card failure

System Maintenance Log

On the following page is an example of a system maintenance log. Use this page to generate copies for your site. Tekelec recommends this log be completed after every preventive and corrective maintenance procedure.

The purpose of this log is to provide both maintenance personnel and the Tekelec Technical Services personnel with a complete trouble history for the specific site. This aids in spotting trouble trends, which if left unrecorded would be impossible to detect.

This is a troubleshooting aid, and should be filled out completely. Printouts or any other supportive material should be referenced whenever possible. The Tekelec Technical Services personnel may ask for some of this information at a later time, if a particular trend begins to develop.

The trouble code field in the log is for recording EAGLE 5 ISS trouble messages. All maintenance (regardless of nature) should be recorded on this log for reference when troubleshooting.

Date	*Trouble Code*	*Action*	*Init*

List of Acronyms and Abbreviations

This manual uses the following acronyms and abbreviations:

AAL.....ATM Adaptation Layer

AAL5.....ATM Adaptation Layer Type 5

AAL5CP.....ATM Adaptation Layer Type 5 Common Part

AATM.....ATM Applique

ACG.....Automatic Call Gapping

ACM.....Application Communications Module

ACT.....Activate

ADJ DPC .....Adjacent Destination Point Code

AI.....Address Indicator

AIN.....Advanced Intelligent Network

ALM .....Alarm

AMA.....Automatic Message Accounting

ANSI .....American National Standards Institute

AP .....Application Processor

APC .....Adjacent Point Code

APPL .....Application

AS.....Application Server; a logical entity serving a specific Routing Key

AS*i*.....Application Specific Interface

ASM .....Application Services Module

ASM-GLS.....Application Services Module with the GLS application

ASM-SCCP .....Application Services Module with the SCCP application

ASP.....Application Server Process

AST.....Associated State for Maintenance

ATH .....Application Trouble Handler

ATI.....Any Time Interrogation

ATM.....Asynchronous Transfer Mode

BIP ..... Board Identification PROM

BITS ..... Building Integrated Timing System

BLM ..... Bulk Load Module

BPDCM ..... The application software for flash memory management on the DCM card.

BPHCAP ..... The application software used by the application processor and the IMT processor of the LIMATM

BPS ..... Bits per Second or Bytes per Second

BSN ..... Backward Sequence Number

CCS7 ..... Common Channel Signaling System #7

CDE ..... Common Desktop Environment

CDL ..... Command Driven Loopback

CDPA ..... Called Party Address

CF ..... Control Frame

CGPA ..... Calling Party Address

CIC ..... Circuit Identification Code

CLASS ..... Custom Local Area Signaling Service

CLLI ..... Common Language Location Identifier

CLU ..... Network Cluster

CNAM ..... Caller ID with Name

CNCF ..... Calling Name Conversion Facility

CPU ..... Central Processing Unit

CRC ..... Cyclic Redundancy Check

CRP ..... Circular Route Prevention

CSU ..... Channel Service Unit

DB ..... Database

DCM ..... Data Communications Module

DDL ..... Dynamic Data Loading

DIMM ..... Dual Inline Memory Module

DIP.....Dual Inline Position

DN .....Directory Number

DPC .....Destination Point Code

DPCA .....ANSI Destination Point Code

DPCI.....ITU International Destination Point Code

DPCN .....ITU National Destination Point Code

DSM .....Data Services Module

DSU .....Data Service Unit

DS0.....Digital Signal Level - 0

DS1.....Digital Signal Level - 1

EBD&A .....Enhanced Bulk Download and Audit

EBI.....Extended Bus Interface

ECM .....Error Correction Method

EF .....Extension Frame

EGTT .....Enhanced Global Title Translation

EIR .....Equipment Identity Register

EMS.....Element Management System

ENET.....Ethernet

ELAP .....EAGLE LNP Application Processor

EMAP.....EAGLE Measurements Application Processor

EOAP.....Embedded OAP

EPAP.....EAGLE Provisioning Application Processor

EPROM .....Erasable PROM

ESD.....Electrostatic Discharge

ESP .....Extended Services Platform

FAK .....Feature Access Key

FAP .....Fuse and Alarm Panel

FE .....Far End

FPC..... Full Point Code

FRU..... Field Replaceable Unit

FSN ..... Forward Sequence Number

FTA ..... File Transfer Area

FTP..... File Transfer Protocol

G-Flex ..... GSM Flexible Numbering

G-Port..... GSM Mobile Number Portability

Gbyte..... Gigabyte

GLS ..... Gateway Loading Services

GPL ..... Generic Program Load

GPSM II ..... General Purpose Service Module II (Hardware)

GSL ..... Generic Software Load

GSM..... Global System for Mobile Communications

GTA ..... Global Title Address

GTI ..... Global Title Indicator

GTT ..... Global Title Translation

GTWY ..... Gateway Administration measurements report

GUI..... Graphical User Interface

GWS ..... Gateway Screening

HC MIM..... High Capacity Multi-Channel Interface Module

HIPR..... High-Speed IMT Packet Router

HMUX ..... High-Speed Multiplexer

HRN ..... Home Routing Number

HSL ..... High-Speed Links

HSU..... High-Speed Multiplexer Signaling Unit

ICMP..... Internet Control Message Protocol

ID ..... Identity

ILA .....Integrated LIM Applique

IMEI .....International Mobile Equipment Identity

IMSI.....International Mobile Subscriber Identity

IMT .....Interprocessor Message Transport

IN.....Intelligent Network

INAP.....Intelligent Network Application Protocol

INP.....INAP-based Number Portability

INET.....Internet

IP.....Internet Protocol

IP^7.....Internet Protocol based SS7 Interface

IPLIM .....The application software used by the DCM card for TCP/IP point-to-point connectivity for ANSI point codes.

IPLIMx .....Point to point IP Transport GPL, referring to IPLIM (ANSI) and IPLIMI (ITU)

IPMX .....IMT Power and Multiplexer

IS-41 .....International Standard 41 (same as and interchangeable with ANSI-41)

IS-ANR .....In Service - Abnormal

ISCC .....Integrated Serial Communications Controller

ISDN .....Integrated Services Digital Network

IS-NR .....In Service - Normal

ISUP .....ISDN User Part

ITU .....International Telecommunications Union

LAN .....Local Area Network

LATA .....Local Access Transport Area

LBP.....Loop Back Point

LC.....Logical Channel

LED .....Light Emitting Diode

LFS .....Link Fault Sectionalization

LIM .....Link Interface Module

LIM-AINF..... A LIM with the AINF interface

LIMATM..... A LIM used with ATM (high-speed) signaling links

LIM-DSO ..... LIM with DSO appliqué

LIM-E1..... LIM with E1 applique

LIM-OCU ..... LIM with Office Channel Unit appliqué

LIM-V35 ..... LIM with V35 interface

LNP ..... Local Number Portability

LOC..... Location

LPO ..... Local Processor Outage

LRN..... Location Routing Number

LS ..... Link Set

LSL..... Low-Speed Link

LSMS ..... Local Service Management System

LSN ..... Link Set Name

LSSU ..... Link Status Signaling Unit

LUDT ..... Long User Data

LUDTS..... Long User Data Services

MAAL ..... Management ATM Adaptation Layer

MAP ..... Mobile Application Part

MAPSCRN..... GSM MAP Screening measurements report

MAS ..... Maintenance and Administration Subsystem

MASP..... MAS processor

MBUS ..... Maintenance Bus

Mbyte ..... Megabyte

MCAP ..... MAS Communication Application Processor Card

MCP ..... Measurement Collection Processor

MCPM..... Measurement Collection and Polling Module

MDAL ..... Maintenance Disk and Alarm (card)

MF ..... Miscellaneous frame

MIB.....Management Information Base

MIM.....Multi-Channel Interface Module

MNP .....Mobile Number Portability

MNP-SRF .....Signaling Relay Function for support of Mobile Number Portability

MPL .....Multi-port LIM

MPS .....Multi-Purpose Server (This device contains either Sun Netra or Tekelec TekServer platform hardware.)

MRN .....Message Reference Number

MSC.....Mobile Switching Center

MSU .....Message Signaling Unit

MTCD.....Maintenance Daily measurements report

MTCDTH .....Maintenance Day-to-Hour measurements report

MTCH.....Maintenance Hourly (marginal) measurements report

MTCS .....Maintenance Status (link/link set) measurements report

MTP .....Message Transfer Part

MTP2 .....Message Transfer Part, Level 2

NDC.....Network Data Collection

NE.....Network Element

NI .....Network Indicator

NID .....Network Identification

NM.....Network Management

NMD.....Network Management Data

NP .....Number Plan

NPA .....Numbering Plan Area

NSD .....Network Signaling Division

NSP .....Network Services Part

OAM .....Operations, Administration, and Maintenance

OAP .....Operation System Support Application Processor

OOS-MA ..... Out of Service - Memory Administration

OOS-MT ..... Out of Service - Maintenance

OOS-DSBLD ..... Out of Service - Disabled

OPC ..... Originating Point Code

OSI ..... Open System Interconnect

OSS ..... Operation Support System

PC ..... Point Code

PCM ..... Power Cooling Module

PCR ..... Preventive Cyclic Retransmission

PDBA ..... Provisioning Database Application

PDBI ..... Provisioning Database Interface

PDN ..... Packet Data Network

PDU ..... Protocol Data Unit

PDS ..... Persistent Device States

PMTC ..... Peripheral Maintenance

PROM ..... Programmable Read-only Memory

PST ..... Primary State for Maintenance

PVC ..... Permanent Virtual Circuit

Q.3 ..... Q.3 protocol

RAM ..... Random Access Memory

RBASE ..... Record Base measurements report

RFC ..... Request For Comments

RLE ..... Remote Link Element

RN ..... Routing Number

RMA ..... Return Material Authorization

RMC ..... Remote Maintenance Center

RSM ..... Remote Switching Module

RTDB.....Real Time Database

SAAL.....Signaling ATM Adaptation Layer
SCCP .....Signaling Connection Control Part
SCCS .....Switching Control Center System
SCM.....System Configuration Manager
SCMG.....SCCP Management
SCP .....Service Control Point
SCRSET .....Screen Set
SCSI .....Small Computer System Interface
SEAC.....Signaling Engineering and Administration Center
SEAS .....Signalling, Engineering, and Administration System
SIB .....Status Indication Busy
SIE .....Status Indication Emergency alignment
SIN .....Status Indication Normal alignment
SIO .....Service Information Octet
SIOS .....Status Indication Out of Service
SLK .....Signaling Link
SLTC.....SS7 Signaling Link Test Controller
SLTM .....Signaling Link Test Mode
SMS .....Short Message Service
SMSC .....Short Message Service Center
SS7 .....Signaling System #7
SSN .....SS7 Subsystem Number
SSP .....Service Switching Point
SST .....Secondary State for Maintenance
SSU .....Status Signaling Unit
STP .....Signal Transfer Point
SVC .....Switched Virtual Circuit

TCAP ..... Transaction Capabilities Application Part

TCP ..... Transmission Control Protocol

TDM..... Terminal Disk Module

TMN..... Telecommunication Management Network

TRBL ..... Trouble

TSM ..... Translation Services Module

TT..... Translation Type

TVG ..... Group Ticket Voucher

UART ..... Universal Asynchronous Receiver - Transmit

UAM ..... Unsolicited Alarm Message

UDP..... User Datagram Protocol

UDT ..... Unit Data Transfer

UDTS ..... Unit Data Transfer Service

UI ..... User Interface

UID ..... User ID

UIM..... Unsolicited Information Message

UPD ..... Update

VCC ..... Virtual Circuit Connection

VCI..... Virtual Channel Identifier

VCL..... Virtual Channel Link

VPC..... Virtual Path Connection

VPI ..... Virtual Path Identifier

VSCCP ..... VxWorks Signaling Connection Control Part

WAN..... Wide Area Network

X.25 DE ..... X.25 destination entity

XUDT..... Extended User Data

XUDTS.....Extended User Data Services

2

Preventive Maintenance

Contents ..... Page

Introduction 2-3

Maintaining the Fuse and Alarm Panel 2-3

- FAP Components 2-4
- Alarms 2-8
- Diode Testing and the Diode Jumper 2-9

MO Removable Cartridge Description 2-13

Removable Cartridge Handling Procedures 2-16

- Inserting the MO Removable Cartridge 2-17
- Removing the MO Removable Cartridge 2-17

Daily Procedures 2-18

- Backup the Database (Daily) 2-18
- System Reports Analysis 2-20
- File Transfer for LNP and INP Measurements 2-21

Weekly Procedures 2-23

- Database Archive (Weekly) 2-23
- Printer Inspection 2-25
- Remote Access Verification 2-26

Monthly Procedures 2-27

- Database Archive (Monthly) 2-27
- FAP Load Balance Verification (PN 870-0243-XX only) 2-28

Change the Fan Tray Filter..... 2-35
Change the Air Supply Filter 2-36
Cleaning Printer 2-38
Fuse Spares Inventory..... 2-39
Wrist Strap Test..... 2-40
Quarterly Procedures 2-41
Database Archive (Quarterly) 2-41
Preventing Dust Buildups 2-43
Rectifier Voltage Inspection/Recording 2-44
Semi-Annual Procedures 2-45
Spare Inventory Rotation 2-45

Introduction

The procedures on the following pages are routine maintenance procedures to be performed on a scheduled basis. These procedures are recommendations that if followed will aid in maintaining system performance and data integrity.

These routines aid in detecting trouble trends and intermittent troubles. As with any maintenance activity, personnel should be encouraged to maintain a log of all routines performed. This aids the maintenance technician as well as the Tekelec Technical Services personnel in determining the source of system troubles and ways to prevent certain troubles from occurring again.

Instructions for performing required maintenance routines are provided. In the event another document may be required for a specific task, that document is referenced.

Maintaining the Fuse and Alarm Panel

The Fuse and Alarm Panel (FAP) serves as a central location for identifying a variety of potential problem conditions. However, you may have to occasionally perform corrective maintenance on the FAP, itself.

The FAP consists of five major functions:

- Input connections
- Diodes
- Fuse Arrays
- Alarm circuitry
- Output connections

Figure 2-1 illustrates the relationship between these functions.

Figure 2-1. FAP High-Level Block Diagram

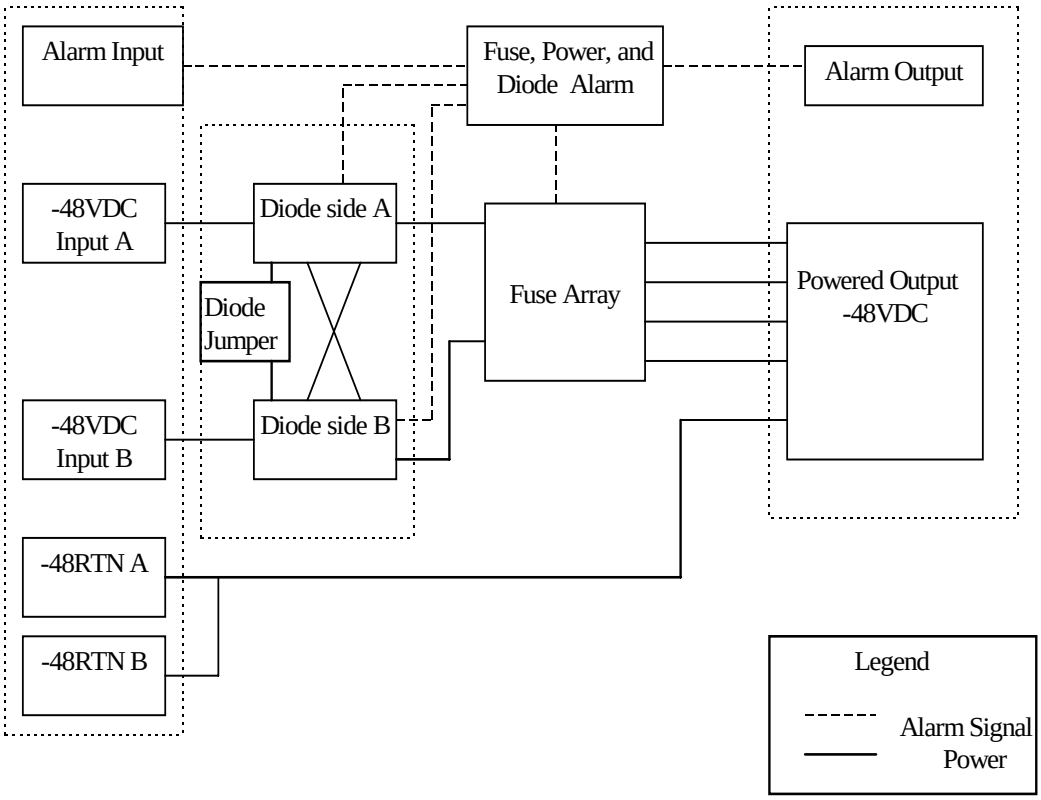

To assist your FAP maintenance efforts, this section provides additional information about the FAP unit:

- FAP components
- FAP alarms
- Diode testing and the diode jumper

For more detailed information on the FAP and its components, refer to the *FAP Technical Reference (820-2888-01)*.

FAP Components

The FAP consists of nine printed circuit boards, each identified by an acronym on its label (see Figure 2-2):

- Backplane (FAP_BP): Located inside the FAP unit, parallel to the back side of the FAP box.

- Alarm board (FAP_AB): Located on the center-right of the front panel, set vertically inside the FAP unit, perpendicular to the front panel.
- Diode boards (FAP_DB): Two boards located on the front panel, flanking the Alarm and Jumper boards on the left and right, and perpendicular to the front panel. Set vertically inside the FAP unit.
- Extender boards (FAP-EB): Two boards located inside the FAP unit, parallel to the bottom of the FAP box, on the far right and left of the unit.
- Fuse holder boards (FAP_FB): Two boards located inside and parallel to the front panel, on the far right and left of the FAP unit.
- Jumper board (FAP_JB): Located on the center-left of the front panel, set vertically in the unit, perpendicular to the front panel.

Figure 2-2. Location of FAP Components

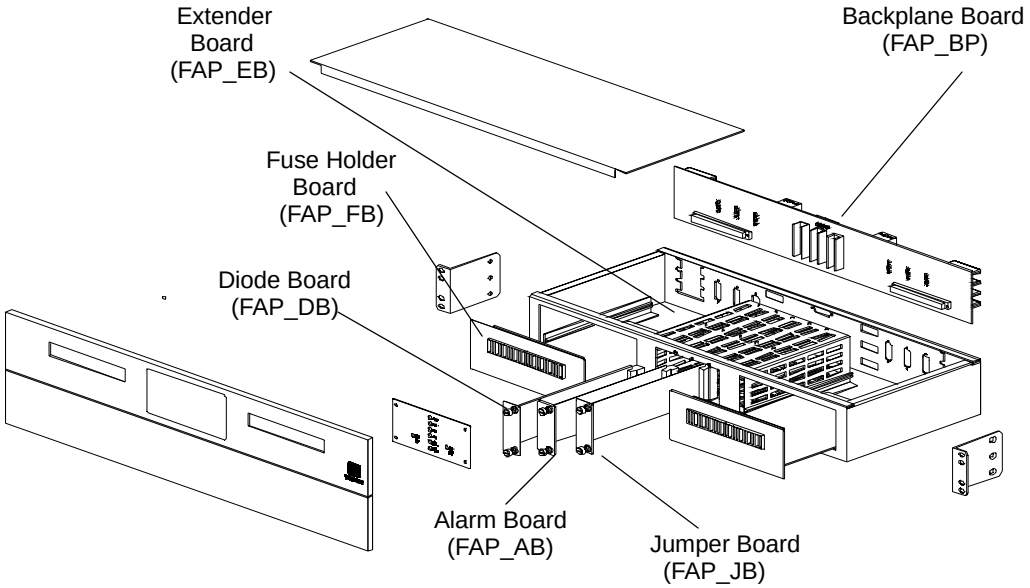

Each of the FAP components has associated functions, as shown in Figure 2-3.

Figure 2-3. FAP Component Functions

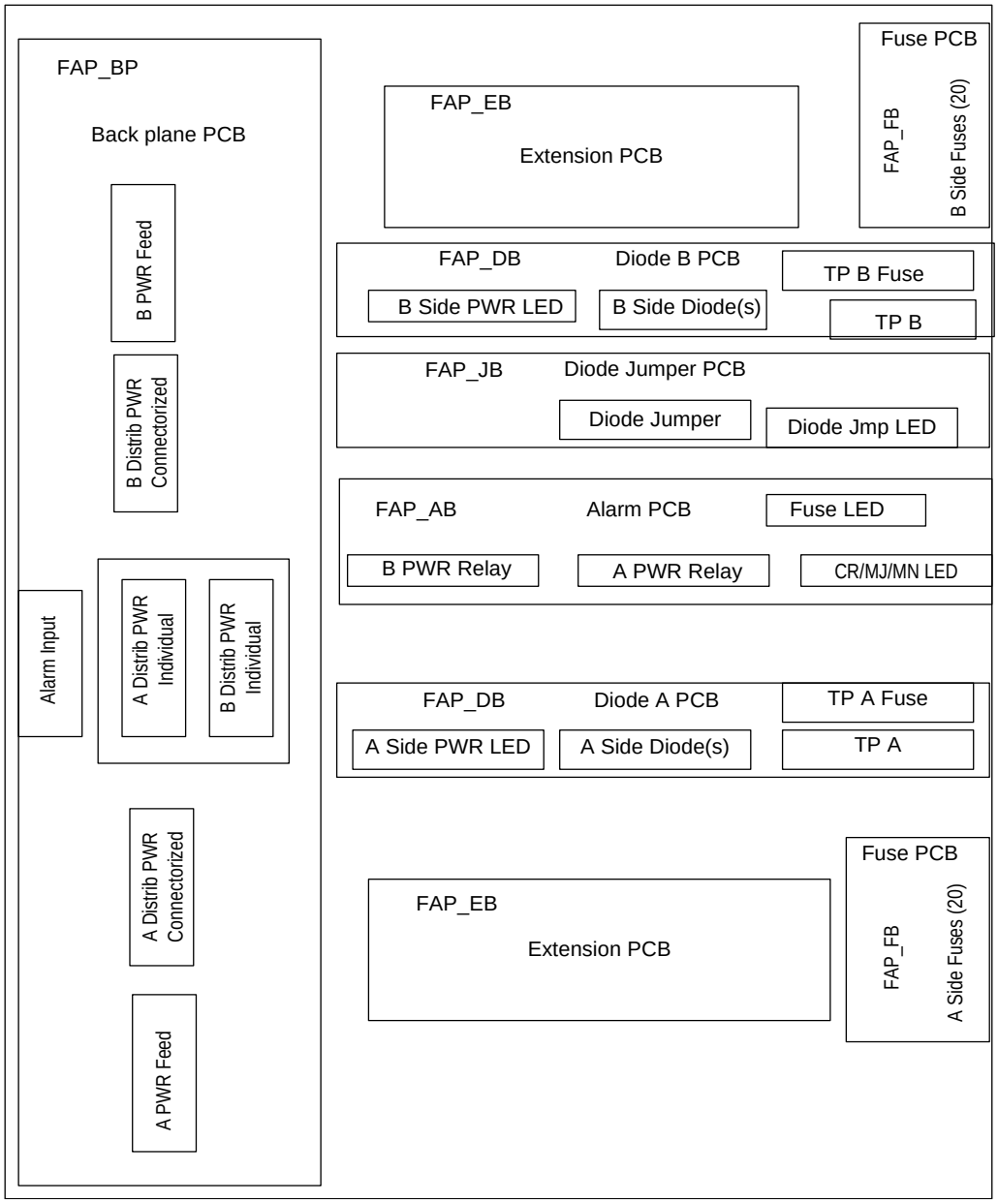

The FAP is composed of nine circuit boards, as shown in Table 2-1. Eight of these circuit boards are field replaceable, and can be hot-swapped.

Table 2-1. FAP Component Replacement

Component	Replacement Requirements	Part Number
FAP Backplane (FAP_BP)	Must be replaced through factory	850-0515-xx
FAP Alarm Board (FAP_AB)	Field replaceable	850-0518-xx (card) 870-1609-xx (assembly)
FAP Diode Boards (FAP_DB_A and FAP_DB_B)	Field replaceable (one at a time)	850-0517-xx (card) 870-1608-xx (assembly)
FAP Extender Boards (FAP_EB)	Field replaceable (one at a time **with service interruption**)	850-0519-xx
FAP Fuse Holder Boards (FAP_FB)	Field replaceable (one at a time **with service interruption**)	850-0516-xx
FAP Jumper Board (FAP_JB)	Field replaceable	850-0523-xx (card) 870-1641-xx (assembly)

The following sections describe each type of circuit board:

Backplane Board (FAP_BP)

The backplane circuit board provides all of the external connections for the FAP. It consists primarily of circuit routing and connectors, but also has one pull-down resistor, which provides a default alarm signal for the Fuse Alarm in the event the alarm board is removed from the FAP.

Alarm Board (FAP_AB)

The alarm circuit board provides indicators and relays for the EAGLE 5 ISS status and fuse alarms. This board includes a jumper (JMP50) for future use. This jumper is installed for all existing configurations.

Diode Boards (FAP_DB)

The diode circuit boards provide power diodes and power input test points. Four diode footprints are included: two for Assembly A and two for Assembly B. Only one of the four positions is intended to be populated; the second footprint is provided for future part rating changes or additional heat-dissipation capabilities.

Extender Boards (FAP_EB)

The extender board provides connection between the backpanel board and the fuse holder boards.

Fuse Holder Boards (FAP_FB)

The fuse holder boards provide 20 fuses with a common alarm.

Jumper Board (FAP_JB)

The jumper board provides the capability to by-pass the diode boards with a fuse. Use this board only for maintenance operations.

Alarms

The FAP provides visual alarms, by means of a lit LED, for a variety of status alarms (see Figure 2-2).

Table 2-2. FAP Alarm Conditions

Alarm	Alarm Condition	Remote Indications
Critical LED	• EAGLE 5 ISS command through TDM • MDAL not present and MDAL_P jumper off	Dependent on EAGLE 5 ISS software
Major LED	EAGLE 5 ISS command through TDM	Dependent on EAGLE 5 ISS software
Minor LED	EAGLE 5 ISS command through TDM	Dependent on EAGLE 5 ISS software
Fuse LED	• Distribution fuse blown • Alarm circuit board removed (no LED indication) • Jumper on the jumper circuit board is on • Power feed failure	Fuse alarm to EAGLE 5 ISS through TDM
PWR A LED	Power feed A is off, but power is available to B.	Fuse alarm to EAGLE 5 ISS through TDM
PWR B LED	Power feed B is off, but power is available to A.	Fuse alarm to EAGLE 5 ISS through TDM
OP/MAINT LED	Jumper on the jumper circuit board is on.	Fuse alarm to EAGLE 5 ISS through TDM

A fuse alarm identifies the following problems or conditions within the FAP:

- blown fuse(s)
- power loss for side A or B
- alarm card removed
- maintenance mode

Use the following indicators to determine the nature of the problem:

Table 2-3. Additional Alarm Indicators

Indicator	Alarm Condition
Fuse alarm and fuse flag down	Blown fuse
Fuse alarm and PWR A LED	Input power loss on A
Fuse alarm and PWR B LED	Input power loss on B
Fuse alarm and OP/MAINT LED is red	Diode jumper is installed (by-passing diodes)

Diode Testing and the Diode Jumper

Table 2-4 shows the FAP part numbers and the corresponding procedure that should be used to test and adjust them.

Table 2-4. FAP Part Numbers and Corresponding Procedures

Part Number	FAP Procedure
870-1606-01 (all revisions)	Procedure 1
870-1616-02 revision G or lower	Procedure 1
870-1606-02 revision H or higher	Procedure 2
870-2320-01 revision B or lower	Procedure 1
870-2320-01 revision C or higher (or 870-2320-03)	Procedure 2

Procedure 1

The diode board must be tested periodically. This procedure applies to the following older FAPs in the field:

- 870-1606-01 (all revisions)
- 870-1616-02 with a revision G or lower
- 870-2320-01 with a revision B or lower

To test a diode circuit board without powering down the entire EAGLE 5 ISS, perform the following procedure.

Procedure

1. Check to verify the OP/MAINT LED is green, indicating the FAP is not in maintenance mode.

2. Unscrew the two thumbscrews securing the FAP jumper board and remove the board.

3. On the jumper circuit board, move the jumper (the DB-26 male connector) from P71 to P72. Tighten the thumbscrews connecting the jumper to its mate, to ensure a good connection. This repositioning overrides the diodes, establishing a direct connection between input and fuse panels.

WARNING: If fuses are blown, DO NOT continue with this procedure. Instead, contact Technical Services at the appropriate number. Reference: "Customer Care Center" on page 1-13.

4. Make sure the glass fuses are installed and verify they are "good" by using the multimeter to check for continuity across each of the glass fuses.

5. Verify that two glass fuses are behind the P72 connector. If these fuses are not present, install them before continuing.

6. Slide the jumper board back into the FAP and verify both of the following alarms display:

   - the OP/MAINT LED lights red on the FAP
   - an EAGLE 5 ISS fuse alarm displays on the terminal

   You may now remove either or both diode circuit boards without affecting EAGLE 5 ISS service.

   NOTE: Using the jumper override negates the backpower protection usually provided by the diode board.

7. Locate diode board A and unscrew the two thumbscrews securing the board. Remove the board from the FAP.

8. Locate the diode to be tested. It has three pins and is attached to the large heat sink. The diode is labeled CR43.

9. Set your digital multimeter to measure resistance.

10. Measure the resistance between the center pin of the diode and either of the outside pins. Record this measurement.

---

11. Measure the resistance between these same pins again, but switch the multimeter leads, so the positive lead is now on the opposite pin. Record this measurement.

---

12. Compare the two measurements. If the diode is functioning properly, one reading should be less than 10K ohms and the other should be much greater.

If both readings are above or below 10K ohms, the diode may have failed. Replace the failed board with a spare diode board.

---

13. Repeat steps 9 through 11, measuring the resistance between the *other* outside pin and the center pin.

This completes the test for diode board A.

---

14. Repeat steps 6 through 12, using diode board B. This completes the test for diode board B.

---

15. Reinsert the two functional diode boards. Tighten the thumbscrews on each board to secure it to the FAP.

---

16. Unscrew the two thumbscrews securing the FAP jumper board and remove the board.

---

17. On the jumper circuit board, move the jumper (the DB-26 male connector) back from P72 to its original position on P71. Tighten the thumbscrews connecting the jumper to its mate, to ensure a good connection. This repositioning returns the diodes to their original, non-maintenance position.

---

18. Slide the jumper board back into the FAP. Verify the OP/MAINT LED lights green. The fuse alarm LED returns to green.

The diode board testing procedure is completed.

Procedure 2

The diode board must be tested periodically. This procedure applies only to the following FAPs:

- 870-1606-02 with revision H or higher
- 870-2320-01 with revision C or higher (or 870-2320-03)

To test a diode circuit board without powering down the entire EAGLE 5 ISS, perform the following procedure.

Procedure

1. Check to verify the OP/MAINT LED is green, indicating the FAP is not in maintenance mode.

2. Unscrew the two thumbscrews securing the FAP jumper board and remove the board.

3. On the jumper circuit board, unclip the 12 pin connector jumper from P71 and re-attach it to P72. Insert it until the plastic retaining clips "snap". Note that the jumper has a retaining strap so it won't get dropped or lost. This repositioning overrides the diodes, establishing a direct connection between input and fuse panels.

WARNING: If fuses are blown, DO NOT continue with this procedure. Instead, contact Technical Services at the appropriate number.
Reference: "Customer Care Center" on page 1-13.

4. Slide the jumper board back into the FAP and verify both of the following alarms display:

- the OP/MAINT LED lights red on the FAP
- an EAGLE fuse alarm displays on the terminal

You may now remove either or both diode circuit boards without affecting EAGLE 5 ISS service.

NOTE: Using the jumper override negates the backpower protection usually provided by the diode board.

5. Locate diode board A and unscrew the two thumbscrews securing the board. Remove the board from the FAP.

6. Locate the diodes to be tested. There are two power diodes, each with three pins. They are labeled CR43 and CR44 for diode board A.

7. Set your digital multimeter to diode check mode.

8. Measure the voltage drop between the center pin of the CR43 diode and either of the outside pins with the ground probe on the center lead. Record this measurement.

9. Measure the voltage drop between these same pins again, but switch the multimeter leads, so the positive lead is now on the opposite pin. Record this measurement.

10. Compare the two measurements. If the diode is functioning properly, the first reading should be between 0.2 and 0.1 volts and the other should be read as an open circuit. Otherwise, replace the failed board with a spare diode board.

---

11. Repeat steps 9 through 12, measuring the voltage between the other outside pin and the center pin of C43.

NOTE: Because the two diode packages on each board are connected in parallel, the second dioode will not need to be checked.

---

12. Repeat steps 6 through 13, using diode board B. The diodes on this card are CR41 and CR42. This completes the test for diode board B.

---

13. Reinsert the two functional diode boards. Tighten the thumbscrews on each board to secure it to the FAP.

---

14. Unscrew the two thumbscrews securing the FAP jumper board and remove the board.

---

15. On the jumper circuit board, unclip the 12 pin connector jumper back from P72 to its original position on P71. Insert it until the plastic retaining clips “snap.” This repositioning returns the diodes to their original, non-maintenance position.

---

16. Slide the jumper board back into the FAP. Verify the OP/MAINT LED lights green. The fuse alarm LED returns to green.

The diode board testing procedure is completed.

MO Removable Cartridge Description

The removable cartridge drive is located on the Maintenance Disk and Alarm Card (MDAL) in card location 1117. A removable cartridge is used for two purposes:

- To hold an off-line, backup copy of the administered data and system GPLs
- To hold a copy of the measurement tables

To use a removable cartridge to hold the system data, it must be formatted for system data. To use a removable cartridge to hold measurements data, it must be formatted for measurements data. The EAGLE 5 ISS provides the user the ability to format a removable cartridge for either of these purposes. A removable cartridge can be formatted on the EAGLE 5 ISS by using the *format-disk* command. For more information on the *format-disk* command refer to the *Commands Manual*.

The EAGLE 5 ISS uses a 2.3, 4.1, or 5.2 Gbyte magneto-optical (MO) removable cartridge. When the cartridge is write protected, no data can be written to the cartridge, nor can the cartridge be erased or formatted. Data can only be read from the cartridge. When the cartridge is write enabled, data can be written to the cartridge, data can be read from the cartridge, and the cartridge can be erased and formatted.

The LEDs on the front faceplate indicate critical, major, and minor alarms and card activity.

The write protecting mechanism of the MO removable cartridge is a red tab located in the lower left corner of the cartridge. Under the red tab is an arrow pointing toward the left edge of the cartridge; the words “DATA PROTECT” are under the arrow. To write-protect the MO removable cartridge, slide the red tab to the left (the direction of the arrow) until it snaps into place. The hole to the right of the tab should be clear and open. See Figure 2-4.

Figure 2-4. 2.3 Gbyte Write Protected Removable Cartridge

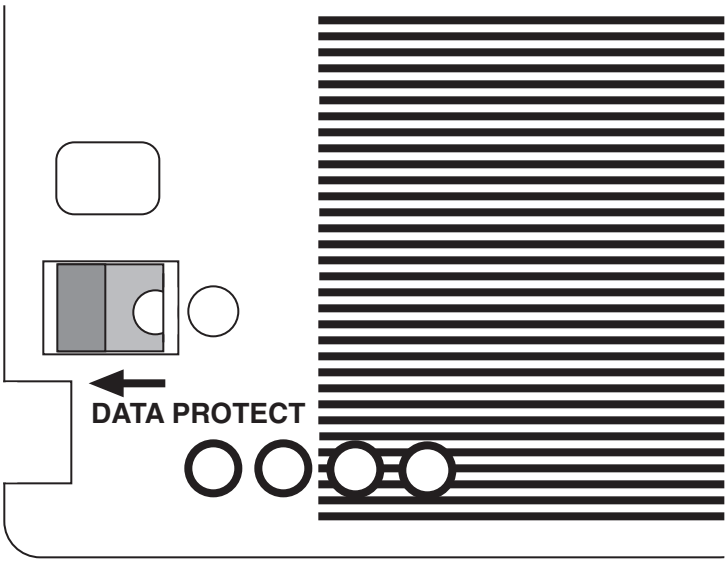

To write-enable the MO removable cartridge, slide the red tab to the right, the opposite direction of the arrow, until it snaps into place. The hole to the right of the tab should be filled with a red dot. See Figure 2-5.

Figure 2-5. 2.3 Gbyte Write Enabled Removable Cartridge

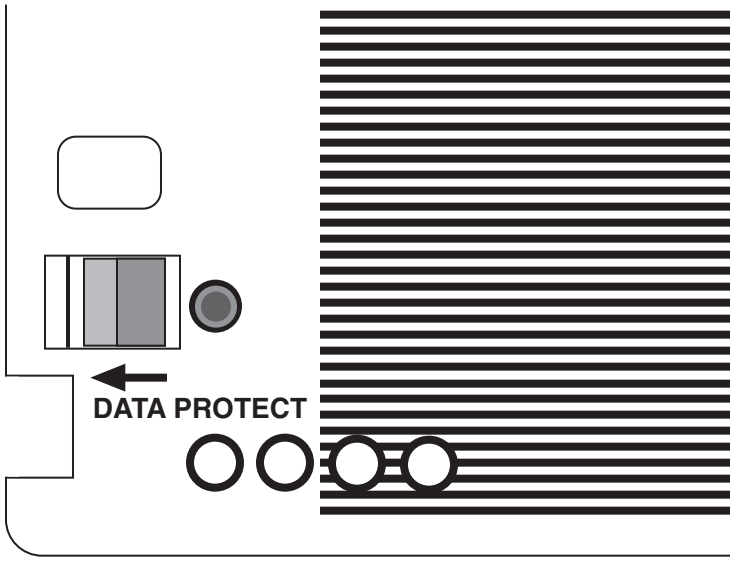

The MO removable cartridge is a two-sided cartridge, with sides designated as side A and side B. The MO removable cartridge drive can only access one side of the cartridge at a time; which side is accessed depends on how the cartridge is inserted into the removable cartridge drive. The side indicator is located on the shutter on each side of the removable cartridge.

Figure 2-6 shows the layout of the removable cartridge drive.

Figure 2-6. 2.3 Gbyte Removable Cartridge Drive Layout

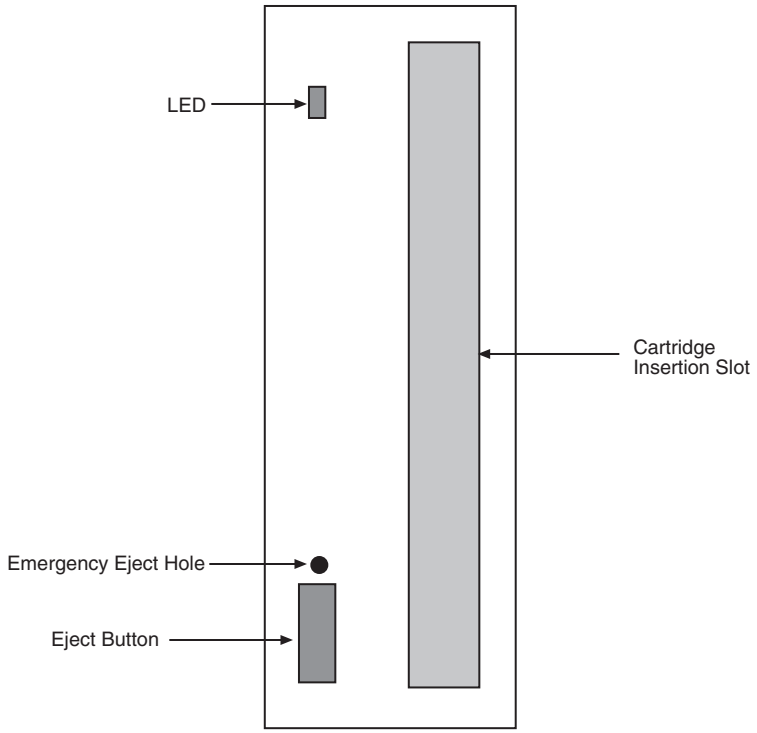

Removable Cartridge Handling Procedures

Purpose

This section is referenced in this manual by many procedures requiring the use of the removable cartridge and the removable cartridge drive. The procedures found in this section are recommended procedures for handling the removable cartridges.

NOTE: Removable cartridges should never be left unattended in the MDAL.

Inserting the MO Removable Cartridge

Procedure

1. To insert the removable cartridge to access side A, insert the removable cartridge into the cartridge insertion slot of the drive with the indicator for side A on the shutter facing to the right side of the drive and away from the side with the LED and the eject button.

2. To insert the removable cartridge to access side B, insert the removable cartridge into the cartridge insertion slot of the drive with the indicator for side A on the shutter facing to the left side of the drive and toward the side with the LED and the eject button.

3. When the removable cartridge is inserted into the removable cartridge drive, the LED is yellow. When the cartridge is ready to use, the LED is green.

Removing the MO Removable Cartridge

Procedure

1. Verify that the LED on the removable cartridge drive is green. If the LED is yellow, the drive is being accessed by the EAGLE 5 ISS and the cartridge cannot be removed from the drive. Wait until the LED is green before attempting to remove the cartridge from the drive.

2. When the LED is green, push the eject button on the removable cartridge drive. While the cartridge is being ejected from the drive, the LED is yellow.

3. The LED is off when the cartridge is fully ejected from the drive. The cartridge can now be removed from the drive.

Daily Procedures

The procedures found in this section are recommended procedures for daily routine preventive maintenance. Some procedures may refer to other chapters within this document.

Backup the Database (Daily)

Purpose

This procedure is used to make a backup of the database on the fixed disk and provide a current copy of the system data to be stored on-site. This procedure can then be used in the event a fixed disk is damaged. This procedure should not be confused with the other database archival procedures. Should the backup removable cartridge created with this procedure become unreadable, the other procedures in this chapter will ensure that a good copy of the database is still available.

Requirements

The databases in the current partitions of both MASPs (FD CRNT) must be coherent. At least one removable cartridge formatted for system data is needed for this routine. Each removable cartridge should be labeled as “Daily Backup.” Each day, select the removable cartridge with this label and perform the backup procedure.

Interval

Daily

Procedure

1. Enter the following command to check the operational status of the database:
rept-stat-db
If necessary, refer to the *Commands Manual* to interpret the output.

2. Enter the following command to create a backup of the database on the fixed disk:
chg-db:action=backup

This command should take no longer than 30 minutes to execute. It could take longer depending on other system activity that is in progress when this command is entered.

During command execution, these messages appear (the active MASP is displayed first):

```
BACKUP (FIXED) : MASP A - Backup starts on active MASP.
BACKUP (FIXED) : MASP A - Backup on active MASP to fixed disk complete.
BACKUP (FIXED) : MASP B - Backup starts on standby MASP.
```

```
BACKUP (FIXED) : MASP B - Backup on standby MASP to fixed disk complete.
```

3. Insert the removable cartridge labeled “Daily Backup” into the removable cartridge drive on the MDAL card.

   Reference: Removable Cartridge Handling Procedures

4. Enter the following command to create a backup of the database on the removable cartridge:
   chg-db:action=backup:dest=remove

   During command execution, these messages should appear.

```
BACKUP (REMOVABLE) : MASP A - Backup starts on active MASP.
BACKUP (REMOVABLE) : MASP A - Backup to removable cartridge complete.
```

5. Verify that the databases on the removable cartridge (RD BKUP) and the current partition of the active MASP (FD CRNT) are coherent by entering the following command:
   rept-stat-db
   If necessary, refer to the *Commands Manual* to interpret the output.

6. Remove the removable cartridge from the removable cartridge drive on the MDAL card.

   Reference: Removable Cartridge Handling Procedures

7. Make an entry in the site maintenance log that a backup was performed. Place the removable cartridge in a safe place, easily accessible in the event of a catastrophic failure.

System Reports Analysis

Purpose

The purpose of this routine is to inspect the printer outputs for possible trouble messages and routinely check the status of the STP through traffic measurements. By inspecting printouts and measurements on a daily basis, system trends can be detected and resolved.

Requirements

Printer must be configured to receive traffic reports. Measurements collection must be activated before reports containing current data can be printed. Enter the following command to activate measurements collection, if necessary:
chg-meas:collect=on

Refer to the *Commands Manual* for more information. If measurements are already allowed, an error message indicates this.

Reports Description

This includes a system terminal and printer output system related messages as well as network protocol messages. Any abnormal activity (this is network dependent) should be highlighted and saved for later retrieval. Refer to Chapter 3, "Corrective Maintenance" for a description of system related messages and procedures for recovery.

Interval

Daily

Variables

hh = The end half-hour interval (0 - 2330) for requested interval

Procedure

1. Enter the following command to print a measurements report for the STP entity type:
   rept-meas:type=systot:enttype=stp

2. Enter the following command to print a measurements report for the link entity type (this command requires either the loc and port parameters or the lsn parameter):
   rept-meas:type=comp:enttype=link

3. Review the STP report and compare with the link report. If excessive errors exist on any one particular link, enter the following command to print a report for the time period the errors occurred:
rept-meas:enttype=link:period=specific:hh
Refer to the *Commands Manual* for more information on using the *rept-meas* command.

4. From this report, determine what events may have occurred during the 30 minute measurements collection period.

File Transfer for LNP and INP Measurements

NOTE: EAGLE 5 ISS systems supporting an ITU network are not configured with the LNP or SEAS features.

Purpose

The purpose of this procedure is to output LNP/INP measurements to the file transfer area (FTA) so the measurements can be collected.

Requirements

A computer with a VT320 or KSR connection to the EAGLE 5 ISS. A communication program that both emulates VT terminals and supports Kermit file transfer. Previous LNP/INP measurement files must have been successfully transferred and deleted (*dlt-fta*) before the start of this procedure. A spreadsheet program that can import Comma Separated Value (CSV) text files. A PC running ProComm© for Windows and Microsoft Excel© can also be used.

Interval

Daily and/or weekly.

Procedure

1. From the EAGLE 5 ISS VT320 or KSR terminal, enter the following command to display the contents of the FTA:
disp-fta-dir:loc=xxxx
Where *xxxx* = the active TDM (1114 or 1116).

2. From the EAGLE 5 ISS VT320 or KSR terminal, enter the following command to delete any existing files from the FTA:
dlt-fta:loc=xxxx:all=yes
Where *xxxx* = the active TDM (1114 or 1116)

---

3. In this example, from the EAGLE 5 ISS VT320 or KSR terminal, enter the following command to send LNP daily measurements to the FTA:
rept-meas:enttype=lnp:type=mtcd

---

4. Enter the following command to activate the file transfer:
act-file-trns:loc=xxxx
Where *xxxx* = the active TDM (1114 or 1116).

---

5. Enter the following command to acquire a list of the files transferred to the FTA in step 4:
disp-fta-dir:loc=xxxx
Where *xxxx* = the active TDM (1114 or 1116).

---

6. Transfer the desired files (with .csv suffixes) to the PC by using the *get* command from within the communications program configured to run Kermit in ASCII mode. An example of the Kermit commands to extract the previous day's records are as follows:

> get mon_lnp.csv
> get tues_ssp.csv
> get thu_lrn.csv
> get sat_npa.csv
> finish

---

7. Run a spreadsheet program and open each of the files collected to view the LNP/INP measurement data.

---

8. Once all the files are successfully transferred and confirmed, enter the following command to remove the files from the FTA:
dlt-fta:loc=xxxx:all=yes
Where *xxxx* = the active TDM (1114 or 1116)

Weekly Procedures

The procedures found in this section are recommended for weekly routine preventive maintenance. Some procedures may refer to other chapters within this document.

Database Archive (Weekly)

Purpose

The purpose of this procedure is to create a copy of the database on a weekly basis over a period of four weeks to be stored in an archive. The copies can then be used in the event a removable cartridge is damaged, and a new copy is required.This routine will generate four copies of the database, all taken at weekly intervals.

Each tape in this cycle should be designated as Week 1, Week 2, Week 3, or Week 4. When all four removable cartridges have been used, repeat the process starting with the Week 1 cartridge.

Requirements

Four removable cartridges formatted for system data are required for this routine. The removable cartridge should be labeled “Week 1” through “Week 4.” Once each week, select the removable cartridge with the appropriate label and perform the backup procedure.

Interval

Weekly

Procedure

1. Enter the following command to check the operational status of the database:
   rept-stat-db
   If necessary, refer to the *Commands Manual* to interpret the output.

2. Insert the removable cartridge labeled “Week x” into the removable cartridge drive on the MDAL card.

   Reference: Removable Cartridge Handling Procedures

3. Enter the following command to create a backup of the database on the removable cartridge:
   chg-db:action=backup:dest=remove

   During command execution, these messages should appear.

```
BACKUP (REMOVABLE) : MASP A - Backup starts on active MASP.
BACKUP (REMOVABLE) : MASP A - Backup to removable cartridge complete.
```

4. Verify that the databases on the removable cartridge backup partition (RD BKUP) and the current partition of the active maintenance and administration subprocessor system (MASP) fixed disk current partition (FD CRNT) are coherent by entering the following command:
   rept-stat-db
   If necessary, refer to the *Commands Manual* to interpret the output.

5. Remove the removable cartridge from the removable cartridge drive on the MDAL card.

   Reference: Removable Cartridge Handling Procedures

6. Make an entry in the site maintenance log that a backup was performed for the appropriate week (Week 1, Week 2, Week 3, or Week 4). Place the removable cartridge in a safe place, easily accessible in the event of a catastrophic failure.

Printer Inspection

Purpose

This procedure verifies the printer is operational and the ribbon does not need replacement. Should the printer cease operation, system reports and trouble reports would not be printed at the system printer. Use the following procedure to verify the operation of the printer.

Requirements

A printer connected through an RS232 to a serial port on the EAGLE 5 ISS control shelf backplane. Refer to the printer user manual (provided by the printer manufacturer) for detailed specifics on maintaining the printer.

Interval

Weekly

Variables

x = TDM serial port number (1-16)

Procedure

1. Verify the carriage assembly is free of any debris. Remove the top of the printer if necessary.

2. Check that the power indicator is illuminated (on). If not, verify the power cord is plugged in.

3. Check the online indicator. If off, press the Select button. Verify the indicator is illuminated.

4. Verify the presence of on-line indicators using the printer *Users Manual*.

5. Enter the following command to send output to the printer:
*act-echo:trm=***x**.

6. Type the following command at a terminal to verify the printer is operating:
   rept-stat-trm
   If the printer does not print any messages, check the printer cable and verify it is connected to a system terminal. If not, reconnect the printer cable (refer to the *Installation Manual* for cable pinouts).

7. Look at the printout. If the ink is faded and difficult to read, replace the ribbon. Refer to the *Users Manual* provided by the manufacturer for ribbon replacement procedures.

Remote Access Verification

Purpose

The purpose of this routine is to verify proper operation of the modem used for remote access of the EAGLE 5 ISS system.

Requirements

Remote terminal and modem.

Interval

Weekly

Procedure

1. From a remote PC or terminal, dial the telephone number of the modem connected to the EAGLE 5 ISS.

2. When connected, verify you are able to log in to the EAGLE 5 ISS and enter commands.

3. Once you have verified the operation of the modem, logoff from the EAGLE 5 ISS and terminate your connection.

Monthly Procedures

The procedures found in this section are recommended procedures for monthly routine preventive maintenance. Some procedures may refer to other chapters within this document.

Database Archive (Monthly)

Purpose

The purpose of this procedure is to create a copy of the database on a monthly basis over a period of four months to be stored in an archive. The copies can then be used in the event a removable cartridge is damaged, and a new copy is required. This routine will generate four copies of the database, all taken at monthly intervals.

Each tape in this cycle should be designated as Month 1, Month 2, Month 3, or Month 4. When all four removable cartridges have been used, repeat the process starting with the Month 1 cartridge.

Requirements

Four removable cartridges formatted for system data are required for this routine. The removable cartridge should be labeled “Month 1” through “Month 4.” Once each month, select the removable cartridge with the appropriate label and perform the backup procedure.

Interval

Monthly

Procedure

1. Enter the following command to check the operational status of the database:
   rept-stat-db
   If necessary, refer to the *Commands Manual* to interpret the output.

2. Insert the removable cartridge labeled “Month x” into the removable cartridge drive on the MDAL card.

   Reference: Removable Cartridge Handling Procedures

3. Enter the following command to create a backup of the database on the removable cartridge:
   chg-db:action=backup:dest=remove

```
BACKUP (REMOVABLE) : MASP A - Backup starts on active MASP.
BACKUP (REMOVABLE) : MASP A - Backup to removable cartridge complete.
```

4. Verify that the databases on the removable cartridge (RD BKUP) and the current partition of the active MASP (FD CRNT) are coherent by entering the following command:
   rept-stat-db
   If necessary, refer to the *Commands Manual* to interpret the output.

5. Remove the removable cartridge from the removable cartridge drive on the MDAL card.

   Reference: Removable Cartridge Handling Procedures

6. Make an entry in the site maintenance log that a backup was performed for the appropriate month (Month 1, Month 2, Month 3, or Month 4). Place the removable cartridge in a safe place, easily accessible in the event of a catastrophic failure.

FAP Load Balance Verification (PN 870-0243-XX only)

Purpose

This procedure is issued to verify the Load Balance Factor (LBF) for the A and B power supplied to each Fuse and Alarm Panel (FAP) in the EAGLE 5 ISS. This procedure applies ONLY to installed FAPs with Tekelec P/N 870-0243-XX.

The LBF is an empirically derived number that provides an indication if a Tekelec STP System Frame has an open power distribution diode. The difference in amperage between the “A” versus “B” battery leads should be within a “typical” range. Values outside of this range should be an indication of a potential problem and requires further investigation.

Requirements

Tekelec recommends that the verification be performed using a Clamping Type Multimeter (Clamp Amp Meter). If the Clamp Meter has different settings or functions than the ones described in this procedure, consult the instruction manual for this meter and determine substitute settings or functions. Results of this verification should be recorded on the form provided with this procedure and filed with the STP System maintenance records.

CAUTION: This procedure must be performed with the utmost Caution. All safety precautions associated with in service equipment and power must be strictly followed. Any equipment that is below the shelf that is being worked on must be protected from falling tools or debris. All jewelry, rings, watches must be removed before this procedure is started. Read this procedure completely before proceeding.

Interval

Monthly

Procedure

1. Login to system via a dedicated terminal or connect a PC to an EAGLE 5 ISS terminal port. Open a capture log via ProComm Plus or other PC communications program.

2. Enter the following command to determine the status of all the cards in the system.

   rept-stat-card

   If necessary, refer to the *Commands Manual* to interpret the output. Save the results to compare with the outputs at the conclusion of this procedure.

3. Enter the following command to verify the status of the signaling links

   rept-stat-slk

   If necessary, refer to the *Commands Manual* to interpret the output. Save the results to compare with the outputs at the conclusion of this procedure.

4. Enter the following command to get a report of all the device trouble notifications that are currently logged in the OAM RAM storage area:

   rept-stat-trbl

   If necessary, refer to the *Commands Manual* to interpret the output. Save the results to compare with the outputs at the conclusion of this procedure.

5. Enter the following command to check the status of the IMT:

   rept-stat-imt

   If necessary, refer to the *Commands Manual* to interpret the output. Save the results to compare with the outputs at the conclusion of this procedure.

6. Enter the following command to check the status of the SCCP subsystem:

   rept-stat-sccp

   If necessary, refer to the *Commands Manual* to interpret the output. Save the results to compare with the outputs at the conclusion of this procedure.

7. Enter the following command to check the operational status of the database:

   rept-stat-db

   If necessary, refer to the *Commands Manual* to interpret the output. Save the results to compare with the outputs at the conclusion of this procedure. Verify that FD CRNT

and FD BKUP for TDM 1114 and TDM 1116 match. If they do not match, perform the following procedure before continuing:

Reference: Backup the Database (Daily) procedure on Page 2-18

WARNING: Do not proceed to the next step if the backup fails.

---

8. Set the Clamp Amp Meter to measure DC amps. Set the dial to the DC 400A setting and zero out/adjust the meter by turning the 0 ADJ control. The meter must read 00.0.

NOTE: On the inside of the Clamp Amp Meter there should be an arrow. The arrow must always be pointing towards the frame when clamped around the cable. If the meter cannot be directly observed, the DATA HOLD function can be utilized, if the meter is so equipped, and the reading will hold. The jaws of the meter must be around the cable for the DATA HOLD function to operate. Values of less than 1.0 Amp on BOTH the "A" and "B" sides are not applicable. Ignore plus (+) or minus (-) in the meter reading.

9. Measure the current on the **A** side of the EAGLE 5 ISS Frame FAP selected for verification. Clamp the meter around the **-48VDC A** battery cable on the FAP. Record the reading on the Test Record form on page 2-34.

---

10. Depress the DATA HOLD function again, if this option was utilized in Step 9. Verify the Clamp Amp Meter reading is 00.0. The meter must read 00.0 before proceeding with Step 11.

---

11. Measure the current on the **B** side of the EAGLE 5 ISS Frame FAP selected in Step 9. Clamp the meter around the **-48VDC B** battery cable on the FAP. Record the reading on the Test Record form on page 2-34.

---

12. Calculate the Load Balance Factor (LBF) and record on the Test Record Form on page 2-34

a. Compute the difference between **A** and **B** sides (**A-B**) or (**B-A**).

b. The difference is divided by the lower of the two (2) measured values (**A** or **B**) and expressed as a percentage. This percentage is the LBF.

c. Enter the LBF in the appropriate space on the Test Record form.

Refer to Figure 2-7 and Figure 2-8 for examples of this formula.
Data indicates that the acceptable range can be between 0% and 125%.
The 125% point is a **Flag** that indicates further investigation is warranted. It indicates the potential for at least one open diode.

Figure 2-7. Open Diode Example

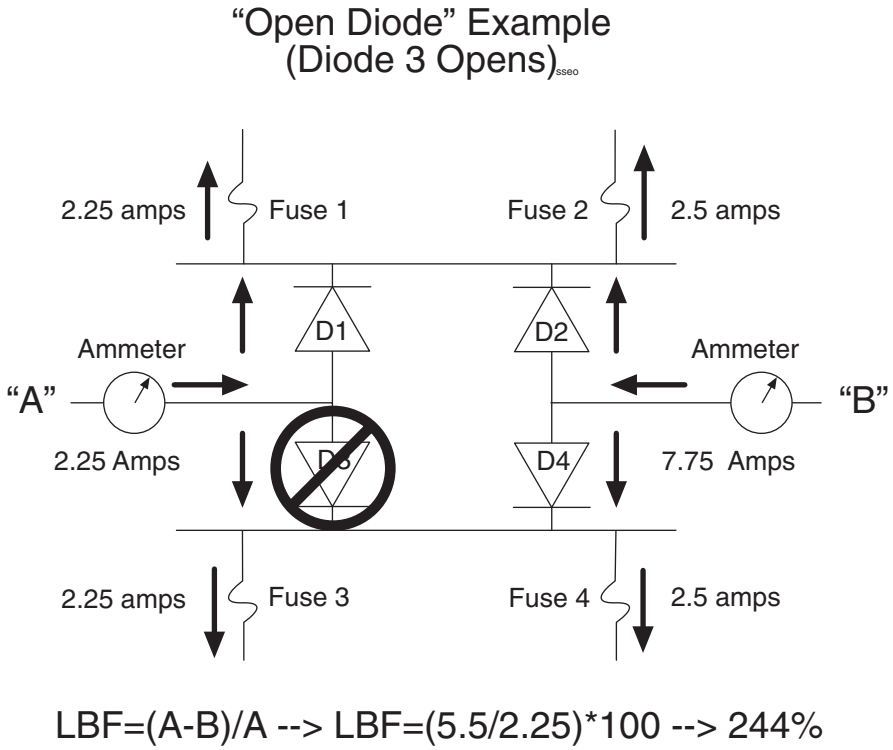

Figure 2-8. Steady State Example

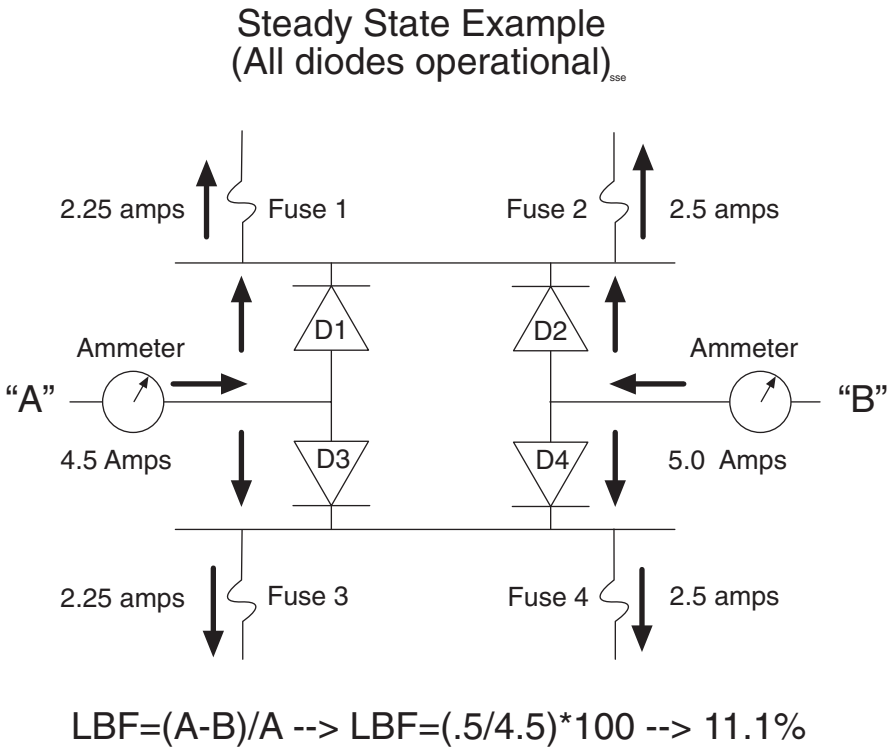

---

13. Contact Tekelec Technical Services at the appropriate number for values above the 125% threshold.

Reference: "Customer Care Center" on page 1-13.

---

14. Depress the DATA HOLD function again, if this option was utilized in Step 9. Verify the Clamp Amp Meter reading is 00.0. The meter must read 00.0 before proceeding with Step 15.

---

15. Repeat Steps 8 through 14 for all EAGLE 5 ISS FAPs.

---

16. Enter the following command to determine the status of all the cards in the system.

rept-stat-card

Compare the output with the results from Step 2. The outputs should be the same as initially recorded.

---

17. Enter the following command to verify the status of the signaling links

rept-stat-slk

Compare the output with the results from Step 3. The outputs should be the same as initially recorded.

---

18. Enter the following command to get a report of all the device trouble notifications that are currently logged in the OAM RAM storage area:

rept-stat-trbl

Compare the output with the results from Step 4. The outputs should be the same as initially recorded.

---

19. Enter the following command to check the status of the IMT:

rept-stat-imt

Compare the output with the results from Step 5. The outputs should be the same as initially recorded.

---

20. Enter the following command to check the status of the SCCP subsystem:

rept-stat-sccp

Compare the output with the results from Step 6. The outputs should be the same as initially recorded.

---

21. Enter the following command to check the operational status of the database:

rept-stat-db

Compare the output with the results from Step 7. The outputs should be the same as initially recorded.

Table 2-5. Tekelec Method of Procedure Test Record

TEKELEC Method of Procedure Test Record					
Frame	**A Battery**	**B Battery**	**A-B Delta (Amps)**	**Load Balance Factor (LBF**	**Technician/Date**
CF 00					
EF 00					
EF 01					
EF 02					
EF 03					
EF 04					
OAPF					
MISC					

NOTE: Complete this test record for all FAP tests
Retain this record in the Tekelec EAGLE 5 ISS maintenance files.

Change the Fan Tray Filter

Purpose

The purpose of this routine is to make sure a clean and adequate supply of air is available to cool the HC MIM cards.

Requirements

A replacement fan tray filter.

Interval

Monthly

Procedure

1. Locate the filter tab on the fan assembly.

Figure 2-9. Fan Assembly

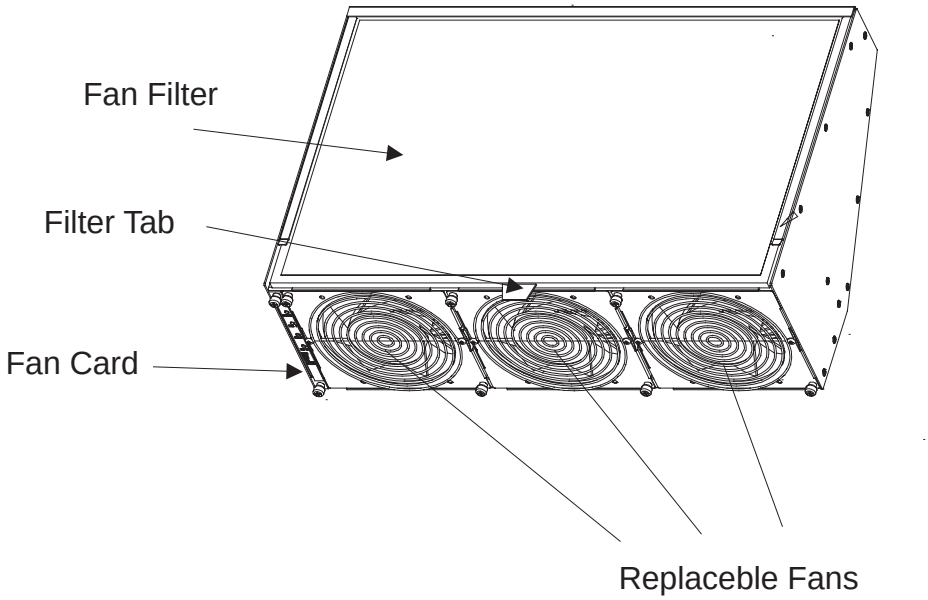

2. Pull the filter tab to remove the fan tray filter.

3. Insert the replacement filter into the fan filter slot. Align the filter over the replaceable fans.

Change the Air Supply Filter

Purpose

The purpose of this routine is to prevent dirt and dust from building up around the fan units, hindering them from cooling the shelf effectively.

Requirements

A replacement air filter. Refer to Appendix A for correct part number.

Interval

Every 45 days

Procedure

1. Turn the fan power switch to the OFF position. The *Active* LED under the fans becomes unlit and the fan *Alarm* LED turns red. The EAGLE 5 ISS generates a UAM indicating a fan failure.

2. Unscrew the two thumbscrews securing the grill and remove it. The air filter is now accessible.

Figure 2-10. Fan Filter Replacement

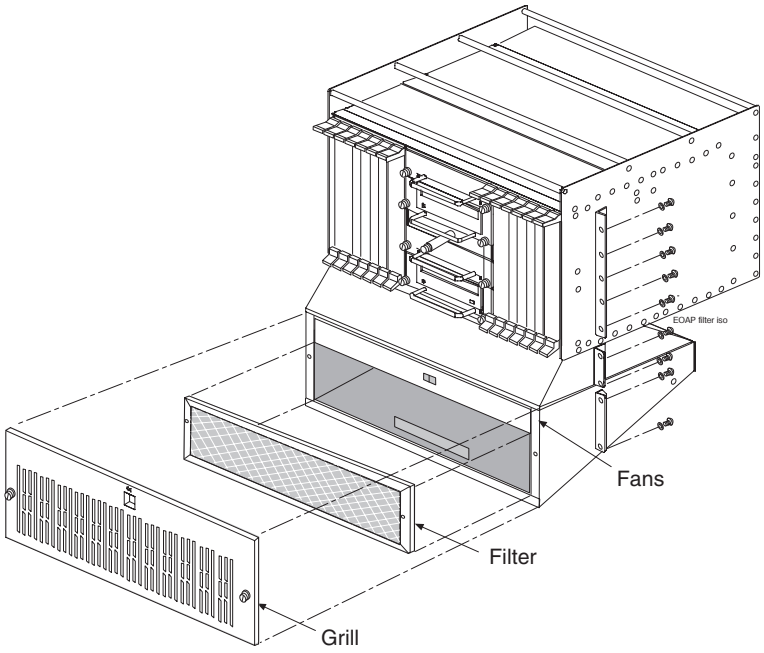

3. Remove and discard the old air filter.

4. Position the new air filter so that it covers the opening to the fan assembly. Check the bottom edge of the filter to make sure the airflow indicator arrows are pointing away from you and towards the fan assembly.

5. To replace the grill, position it on the fan assembly and screw in the two thumbscrews to secure the grill in place.

6. Turn the fan power switch to the ON position. The two LEDs for the fan assembly turn green and the EAGLE 5 ISS generates a UIM to indicate the fan alarm is cleared.

Cleaning Printer

Purpose

The purpose of this routine is to prevent the system printer from building up dirt and dust around the print heads and carriage assemblies, preventing it from operating.

Requirements

Printer cleaning kit, or cleaning solvent. Cotton swabs and damp cloth.

Interval

Monthly

Procedure

Follow the manufacturer’s procedures for cleaning the print head and carriage assembly.

Fuse Spares Inventory

Purpose

This routine verifies ample spare fuses are available. Fuses are used in the fuse and alarm panel (FAP).

Requirements

None

Interval

Monthly

Fuse Types

Two types of fuses are used in the EAGLE 5 ISS:

- Industry standard GMT fuse 1 amp
- Industry standard GMT fuse 3 amp

Fuse Storage

Spare fuses are stored in a fuse tray located on the side of each frame. Check that both types of GMT fuses are in this tray. Tekelec recommends no fewer than five of each fuse type be readily accessible.

If the EAGLE 5 ISS is not located at the end of a bay, check your facility's spare fuse storage.

GMT fuses are industry standard fuses and are provided by Tekelec during installation of the system. Additional inventory of these fuses should be purchased through Tekelec.

Wrist Strap Test

Purpose

The purpose of this routine is to verify the integrity of the anti-static wrist strap and ground cord used when handling cards from the EAGLE 5 ISS.

Requirements

Ohmmeter, wrist strap (equipped with the EAGLE 5 ISS).

Interval

Monthly

Procedure

DANGER: If the resistance measured is less than 800 Kohms, you may be electrocuted if the equipment short circuits while you are wearing the wrist strap. If the resistance measured is greater than 1200 Kohms, you may damage your equipment.

1. Detach the grounding cord from the wrist strap.

2. Using an ohmmeter, measure the resistance between the two ends of the ground cord.

3. If you measure a resistance between 800 Kohms and 1200 Kohms, the ground cord is safe to continue using.

4. If you measure a resistance that is not between 800 Kohms and 1200 Kohms, discard the ground cord and wrist strap. They are no longer safe to use.

Quarterly Procedures

The procedures found in this section are recommended procedures for quarterly routine preventive maintenance. Some procedures may refer to other chapters within this document.

Database Archive (Quarterly)

Purpose

The purpose of this routine is to create an archive copy of the EAGLE 5 ISS database. This archive copy should be stored off-site and saved for emergency recovery when all other procedures have failed. This routine will reuse the same removable cartridge each quarter.

Requirements

This procedure requires a removable cartridge formatted for system data.

Interval

Quarterly

Procedure

1. Enter the following command to check the operational status of the database:
rept-stat-db
If necessary, refer to the *Commands Manual* to interpret the output.

2. Insert the removable cartridge labeled “Archive” into the removable cartridge drive on the MDAL card.

Reference: Removable Cartridge Handling Procedures

3. Enter the following command to create a backup of the database on the removable cartridge:
chg-db:action=backup:dest=remove

```
BACKUP (REMOVABLE) : MASP A - Backup starts on active MASP.
BACKUP (REMOVABLE) : MASP A - Backup to removable cartridge complete.
```

4. Verify that the databases on the removable cartridge (RD BKUP) and the current partition of the active MASP (FD CRNT) are coherent by entering the following command:
rept-stat-db
If necessary, refer to the *Commands Manual* to interpret the output.

---

5. Remove the removable cartridge from the removable cartridge drive on the MDAL card.

Reference: Removable Cartridge Handling Procedures

---

6. Make an entry in the site maintenance log that a backup was performed on the "Archive" removable cartridge. Place the removable cartridge in a safe place off-premise. This copy is for emergency recovery in the event all other methods of database recovery failed.

Preventing Dust Buildups

Purpose

The purpose of this routine is to prevent dust build-up in and around the cabinet. Collection of dust within the EAGLE 5 ISS can allow electrostatic charges to build around circuit cards, possibly damaging cards installed in the system.

Requirements

Damp cloth

Interval

Quarterly

Procedure

NOTE: Do not use compressed air. Do not remove the plexiglass panels from the rear of the frame. This procedure is to be used for removing dust from the front of the system and from around the card cages only.

1. Open the cabinet doors on the front of the cabinet(s). Using a damp cloth, wipe the dust from the doors and from the front of the card cages.

2. Using the same cloth, wipe the dust from the air intakes and around the exterior of the system frames.

Rectifier Voltage Inspection/Recording

Purpose

The purpose of this routine is to verify that the rectifier is providing adequate voltages and has not become a marginal supply. By identifying power supply problems early, the possibility of failure can be circumvented.

Requirements

Volt meter capable of measuring DC voltages in the range of -20VDC to -60VDC.

Interval

Quarterly

Procedure

1. Locate the power source for the EAGLE 5 ISS.
2. Using a VOM, measure the -48VDC supply.
3. Verify voltages are between -46VDC and -52VDC. (If voltages are higher or lower, refer to the manufacturers maintenance procedures for appropriate action).

Semi-Annual Procedures

The procedure found in this section is recommended for semi-annual (every 6 months) routine preventive maintenance. Some procedures may refer to other chapters within this document.

Spare Inventory Rotation

Purpose

The purpose of this routine is to verify the integrity of spare cards. By rotating spares on a regular basis, their operation can be verified before they are needed as replacements.

Requirements

None

Interval

Semi-annually (every 6 months)

Procedure

WARNING: This procedure may interrupt service. Verify the type of card and service it provides, and only use this routine during the maintenance window.

1. Identify the spare cards in your inventory.
2. Locate the card in service that matches the configuration of your spare card.
3. Verify the part numbers and revision numbers of the cards are compatible.
4. Refer to Appendix A, “Card Removal/Replacement Procedures,” for the proper procedure for each card type.
5. Place the card from your spares inventory into the now empty slot. Perform any administrative commands described in Appendix A.
6. Make an entry in the site maintenance log and place the card removed from the system into your spares inventory.

3

Corrective Maintenance

Contents ..... Page

Introduction 3-3

System Alarm Levels 3-4

- Critical 3-4
- Major 3-4
- Minor 3-4

Trouble Detection 3-4

- Audible Alarms 3-4
- Visual Alarms 3-5
- Event/Error Messages 3-9
- IMT Bus States 3-10
- IMT System Alarm Level Determination 3-10

Unsolicited Alarm Messages (UAM) 3-11

Unsolicited Information Messages (UIM) 3-27

Output Messages 3-38

- Output Message Format 3-38

UAM/UIM Changes 3-40

- EAGLE 5 ISS Release 33.0 UAM/UIM Changes 3-40
- EAGLE 5 ISS Release 34.0 UAM/UIM Changes 3-45
- EAGLE 5 ISS Release 34.3 UAM/UIM Changes 3-49
- EAGLE 5 ISS Release 35.0 UAM/UIM Changes 3-50

Alarm Clearing Procedures 3-54
Retrieve Trouble Report 3-55
Hourly Status Message Reports 3-56
Maintenance System Event Logs 3-60
Obituaries 3-62
Terminal Not Responding 3-63
Printer Not Working 3-65
Modem Not Working 3-68
Remove Removable Cartridge Stuck in Drive on MDAL 3-69
Link Maintenance 3-71
    Link Fault Sectionalization 3-71
    Link Maintenance Enhancements 3-77
Power Down of In-Service System 3-84
Power Up of the System 3-88
UAM and UIM Troubleshooting Procedures 3-89

Introduction

The EAGLE 5 ISS trouble detection is distributed throughout the system. Each processor continually monitors its internal subsystems and certain external subsystems. Whenever a trouble condition changes state, the processor analyzes the change and stores the analysis for reporting to the active MASP. The trouble detection software does not affect the service quality of the system.

Each MASP is made up of two cards, the GPSM-II card (General Purpose Service Module II) and the TDM (terminal disk module).

The GPSM-II card contains the communications processor and applications processor and provides connections to the IMT bus. The GPSM-II controls the maintenance and database administration activity.

The TDM contains the fixed disk drive, the terminal processor for 16 serial I/O ports and an interface to the MDAL (maintenance disk and alarm) card which contains the removable cartridge drive and alarm logic. There is only one MDAL card in the maintenance and administration subsystem and it is shared between the two MASPs.

The TDM is associated with a specific GPSM-II card. For example, the TDM in location 1114 is associated with the GPSM-II in location 1113 and the combination of these two cards is designated as MASP A. The TDM in location 1116 is associated with the GPSM-II in location 1115 and the combination of these two cards designated as MASP B. When MASP A is active, the GPSM-II in location 1113 and TDM in location 1114 are active. When MASP A is standby, the GPSM-II in location 1113 and TDM in location 1114 are standby. One MASP is always active and the other MASP is always standby.

To determine which MASP is active, enter the *rept-stat-db* command, the *rept-stat-card* command, or examine the LEDs on both TDM cards. If the LED on the TDM card is green, the associated MASP is active. (If the LED on the TDM card toggles between green and amber, the associated MASP is standby.)

The output of the *rept-stat-db* command shows which MASP is active with the indicator *(ACTV)* following the TDM card location. The indicator *(STDBY)* following the TDM card location shows which MASP is standby.

The output of the *rept-stat-card* command shows which MASP is active with the entry *ACTIVE* in the *SST* field for the GPSM-II card. The entry *STANDBY* in the *SST* field for the GPSM-II card shows which MASP is standby.

The database commands, such as *rept-stat-db*, refer to the TDM because the TDM contains the fixed disk drive for the MASP. The MDAL is only referred to when inserting or removing the removable cartridge because the removable cartridge drive resides on the MDAL.

System Alarm Levels

There are three levels of alarms in the EAGLE 5 ISS. They are:

- Critical
- Major
- Minor

Critical

A critical alarm is an indication o+nance capabilities and requires immediate maintenance attention, regardless of time of day.

Major

A major alarm is an indication of a problem that seriously affects system operation, maintenance and administration, etc. and requires immediate attention. The urgency is less than in critical situations because of a lesser immediate or impending effect on system performance, customers, and operating company operations and revenue.

Minor

A minor alarm is an indication of a problem that does not have a serious impact on service, and does not require immediate maintenance attention.

Trouble Detection

The first step in analyzing a system trouble is to know when a trouble exists. The EAGLE 5 ISS handles this task through:

- Audible alarms
- Visual alarms
- Event/error messages

Audible Alarms

The EAGLE 5 ISS has three types of audible alarms: critical, major and minor. Audible alarms are generated by the maintenance disk and alarm card (MDAL), and can be heard through the electronic sonalert device installed on the card. Each alarm has its own distinct cadence as described in the following:

- Critical - Two tones 0.5 seconds apart, separated by 1.5 seconds of silence.
- Major - Single tone, separated by 1.5 seconds of silence.
- Minor - Single tone of 5 seconds or continuous tone for power plant alarm.

Visual Alarms

The EAGLE 5 ISS has several types of visual alarms. They are:

- MDAL LEDs
- Alarm LEDs on the Fuse and Alarm Panel (FAP)
- Alarms displayed on the system terminal
- LEDs on application cards
- End cabinet alarm indicators

Maintenance personnel usually see the alarm LEDs on the fuse and alarm panel (FAP) and the alarms displayed on the system terminal screen to alert them that a system problem exists. The LEDs on a card help maintenance personnel diagnose where a problem exists.

MDAL LEDs

Following are the five alarm LEDs on the face of the MDAL card. See Figure 3-1:

- Critical
- Major
- Minor
- MASP-A
- MASP-B

When the system detects an alarm, the appropriate alarm level and location (MASP-A or MASP-B) LEDs illuminate. See Figure 3-1.

NOTE: Verify the state of the MDAL card by observing the LEDs on the face of the MDAL card. The fuse and alarm panel do not reflect any alarms caused by the MDAL card.

Figure 3-1. MDAL Alarm LEDs

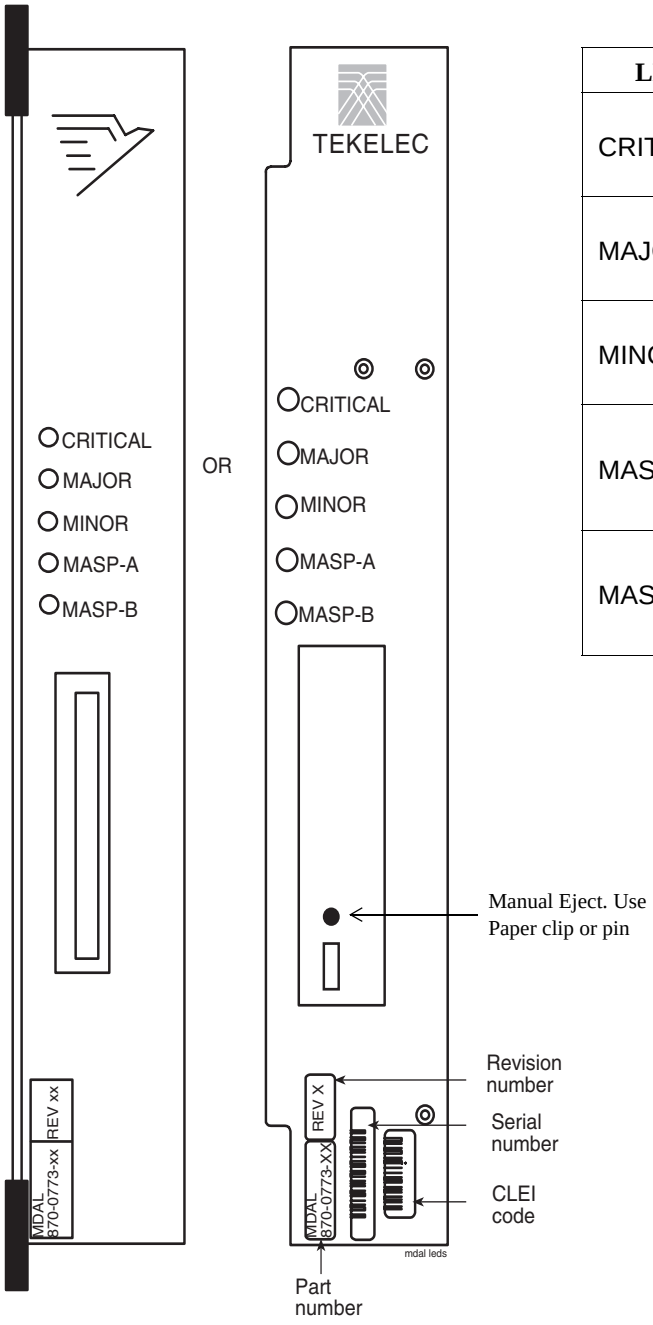

LEDs	Descriptions
CRITICAL	RED - Critical alarm condition detected GREEN - No alarm
MAJOR	RED - Major alarm condition detected GREEN - No alarm
MINOR	AMBER - Minor alarm condition detected GREEN - No alarm
MASP-A	GREEN - MASP-A is the active MASP OFF - MASP-A is the standby MASP or is not present
MASP-B	GREEN - MASP-B is the active MASP OFF - MASP-B is the standby MASP or is not present

Alarm LEDs on the Fuse and Alarm Panel (FAP)

There are six alarm LEDs on the FAP (Table 3-1):

- Two power alarm LEDs (A and B)
- A critical alarm LED
- A major alarm LED
- A minor alarm LED
- A fuse alarm

The FAP provides protected distribution of power to the system. Protection is provided by the fuses placed in the GMT fuse holders used in the panel.The FAP contains a fuse fail alarm circuit that operates when one or more of the panel's fuses fail. An LED changes from green to red when a fuse has failed. The LED remains red until the fuse has been replaced.

The fuse and alarm panel uses GMT fuses for individual circuit protection (see Figure 3-2). The EAGLE 5 ISS uses 3A and 1A fuses, depending on the application. When a fuse fails due to an overload condition, a small colored flag on the fuse shows the position of the fuse that has failed. The flag is gray on 1A fuses, blue on 3A fuses, black/white on 7.5A fuses, and red on 10A fuses.

Figure 3-2. GMT Fuse

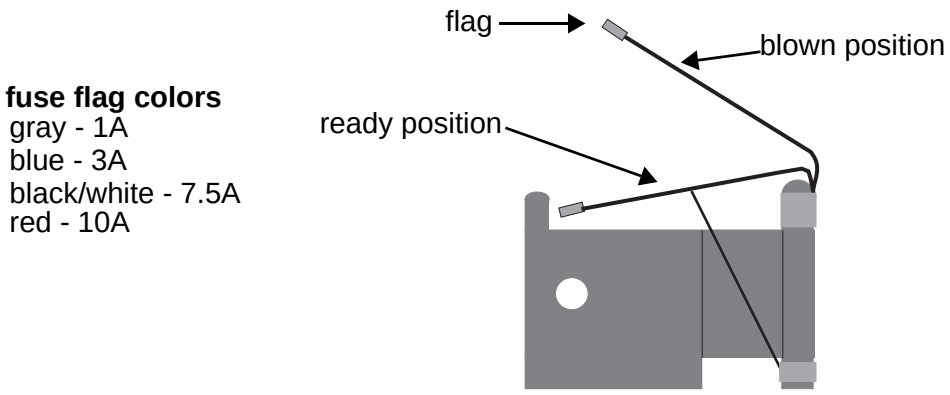

The panel contains two separate circuits, A and B. Current flows from the input terminals to the fuse bus. When a fuse is installed in a fuse holder, the circuit is completed to the output connector. The Fuse Fail Alarm LED on the front panel indicates the condition of the panel. Green is indicated if power is applied to the panel and there are no failed fuses. The green LED changes to red when a fuse fails. An unlit LED indicates a failed LED or no power to the fuse and alarm panel.

The fuse and alarm panel is also equipped with frame alarm LEDs that display the critical, major, and minor alarms generated by the EAGLE 5 ISS system.

The Fuse and alarm panels have the A and B buses connected through diodes to allow one bus to pick up the entire load when the other bus loses power.

Table 3-1 describes the front panel configuration of the fuse and alarm panels.

Table 3-1. Fuse and Alarm Panel Front Items (P/N 804-0007-06)

Fuse Panel Item	Description
Fuse Positions	2 groups of 20 GMT fuses
Card Holder	slide-card holder with 2 designation cards for 20 fuse positions each
Fuse Alarm	LED indicator for fuse fail alarm
Critical Alarm	LED indicator for critical alarm
Major Alarm	LED indicator for major alarm
Minor Alarm	LED indicator for minor alarm
Power Alarm	LED indicator for lose of power on either A bus or B bus

Figure 3-3. Fuse and Alarm Panel Front Layout (870-0243-xx)

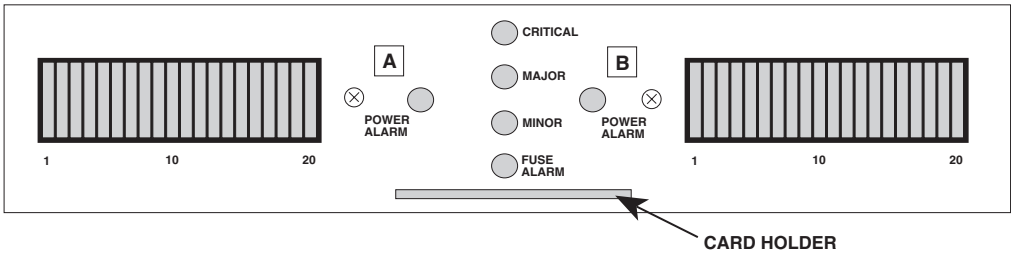

Figure 3-4. Fuse and Alarm Panel Front Layout (870-1606-xx/870-2320-xx)

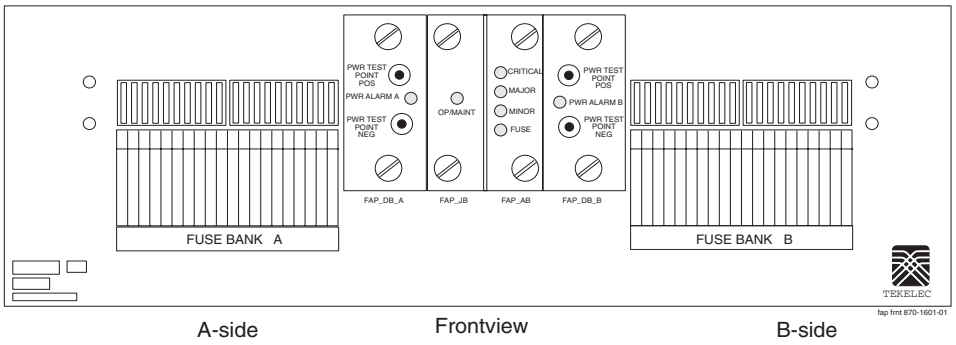

Alarms appearing on a terminal screen

Three types of alarms may be displayed on a system terminal screen:

- CRIT - Indicates a critical alarm
- MAJR - Indicates a major alarm
- MINR - Indicates a minor alarm

These appear as three highlighted boxes in the top left corner of a terminal. If an alarm condition exists, it is displayed in one of the highlighted boxes. There is a fourth box next to the three alarm boxes that is not used. To obtain information about the alarm, use the *rept-stat-alm* command at the system terminal, followed by a carriage return. This command provides all current alarm status. Refer to the *Commands Manual* for more information about the *rept-stat-alm* command.

Alarms on Application Cards

Each application card has LEDs that indicate the condition of the card. Alarm conditions appear on the card if the card has a fault. Refer to the *Installation Manual* for the location and description of the card LEDs.

End Cabinet Alarm Indicators

There are three alarm LEDs on the end cabinet:

- A critical alarm LED
- A major alarm LED
- A minor alarm LED

When an alarm condition is present, one or more of these LEDs illuminate in the signifying the overall system alarm level. Refer to the *Installation Manual* for alarm indicators.

Event/Error Messages

Unsolicited messages are used in the EAGLE 5 ISS for trouble notification and to communicate the status of the system to Operations Services (OS). The EAGLE 5 ISS outputs two types of unsolicited messages.

Unsolicited Alarm Messages (UAMs) are used to denote a persistent problem with device or object that needs the attention of a craftsperson. Some examples are a link failure, a subsystem being out of service, or a card not receiving a system clock.

Unsolicited Informational Messages (UIMs) are indications of transient events that have occurred. UIM examples include messages that an MSU contains invalid data or failed a gateway screening function.

The location of a card with a fault is displayed with the event/error message. The location is displayed as a card number. Card numbers are used to locate the card in the EAGLE 5 ISS system. Refer to the *Installation Manual* for card locations.

Following is an example of an event/error message displaying the card location:

```
      RLGHNCXA21W 00-02-07 12:01:43 EST  EAGLE 3 5.0.0
  **   0014.0008  ** CARD 1113 OAM       Active MASP has become isolated
```

The card location always follows the word “CARD” in the message. In this example, the card number is **1113**.

IMT Bus States

The states of the IMT bus are combined from the primary state (PST) and secondary state (SST) for each IMT bus and are as follows:

PST	SST	Definition
IS-NR	Active	IMT bus is operating normally.
IS-ANR	Fault	IMT bus has had a failure on at least one but not all cards.
IS-ANR	Manual	IMT bus is inhibited, but some cards have been connected to it.
OOS-MT	Fault	IMT bus has a failure on all cards.
OOS-MT-DSBLD	Manual	IMT bus is inhibited and no cards are connected to it.

The *rept-stat-imt* command is used to report the status of the IMT bus. An example of the output follows:

```
RLGHNCXA03W 00-09-27 16:50:24 EST  EAGLE 35.0.0
 IMT   PST             SST        AST
  A    IS-NR           Active     -----
  ALARM STATUS       = No alarms
 IMT   PST             SST        AST
  B    IS-ANR          Fault      -----
  ALARM STATUS       = **  0108 Major IMT Failure Detected
Command Completed.
```

IMT System Alarm Level Determination

The state of the IMT subsystem is determined from the state of each IMT bus. If both buses are IS-NR active, the IMT subsystem is IS-NR active. If only one IMT bus is manually disabled (IS-ANR manual), the IMT subsystem is IS-ANR manual. Otherwise, the IMT subsystem state is IS-ANR fault.

The alarm level of an IMT bus in the IS-ANR fault state is determined by how many bad card connections it has. The number of bad connections required for a major alarm or a minor alarm are as follows:

- 0 failures = no alarm
- 1-2 failures = minor alarm

- 3 or more = major alarm

The alarm levels on the individual buses combine to give the overall alarm level for the IMT subsystem. Table 3-2 shows the rules that are used to determine the overall alarm level of the system of IMT buses.

Table 3-2. IMT Bus Alarm Levels

Bus A Alarm Level	Bus B Alarm Level	Overall Alarm Level
Normal	Normal	Normal
Normal	Minor	Normal
Minor	Normal	Normal
Normal	Major	Minor
Major	Normal	Minor
Minor	Minor	Major
Minor	Major	Major
Major	Minor	Major
Major	Major	Critical

Unsolicited Alarm Messages (UAM)

The system sends unsolicited alarm messages to the system terminal whenever there is a system fault, whenever a previous fault condition is corrected, when a subsystem, equipment, and/or service is placed in or taken out-of-service. Each message has a trouble code and text associated with the trouble condition. The message reference numbers and their trouble text are shown in Table 3-3, Table 3-4, Table 3-5, and Table 3-6.

Table 3-3. Critical Alarm Messages

Message Reference Number and Trouble Text
0041 -LSMS bulk load required
0058 - Critical customer trouble detected
0063 - Critical holdover clock trbl detected
0077 - Card temperature is critical lvl:T2
0092 - MDAL not responding
0112 - Major failures detected on both IMTs
0128 - All clocks have failed
0153 - STPLAN not available
0181 - NDC Subsystem is not available

Table 3-3. Critical Alarm Messages (Continued)

Message Reference Number and Trouble Text
0197 - All high speed clocks have failed
0261 - MPS unavailable
0287 - RTDB Table Level 2 FAK Cap Exceeded
0292 - GLS is not available
0308 - Node isolated due to SLK failures
0313 - DPC is prohibited
0319 - REPT-MTPLP-DET: Circ rte det(cong)
0320 - REPT-MTPLP-SUST: Sustained circ rt(cong)
0325 - DPC subsystem is blocked
0326 - DPC subsystem is prohibited
0331 - SCCP is not available
0332 - DPC Subsystem is prohibited and blocked
0334 - DPC Subsystem is Abnormal
0349 - SEAS unavailable
0350 - OAP terminals inhibited
0356 - LSMS is unavailable
0368 - Temp Key(s) have expired
0370 - Critical Platform Failure(s)
0371 - Critical Application Failure(s)
0395 - Local Subsystem is not available
0396 - Local Subsystem is disabled
0424 - LNP Subsystem is not available
0435 - LNP Subsystem is disabled
0437 - System SCCP TPS Capacity Exceeded
0438 - Degraded Mode, Invalid OAM HW config
0442 - RTDB database capacity is 95% full
0453 - Exceeded Service Error Threshold Lvl 2
0455 - EIR Subsystem is not available
0456 - EIR Subsystem is disabled

Table 3-3. Critical Alarm Messages (Continued)

Message Reference Number and Trouble Text
0468 - All STC Networks Unavailable
0469- All STC Cards Unavailable
0518 - Measurements subsystem unavailable
0520 - Frame power usage reached LVL3
0528 - Service is not available
0529 - Service is disabled
0534 - RTX is prohibited

The Major Alarm message reference numbers and associated trouble text are shown in Table 3-4.

Table 3-4. Major Alarm Messages

Message Reference Number and Trouble Text
0001 - Card has reset
0008 - Active MASP has become isolated
0013 - Card is isolated from the system
0018 - Exiting forced simplex mode
0043 - Incorrect feature configuration
0047 - Card type not valid for application
0051 - TSC sync is in simplex mode
0053 - Standby TDM failure
0059 - Major customer trouble detected
0064 - Major holdover clock trouble detected
0078 - Card temperature exceeds nominal lvl:T1
0082 - Alarm in Fuse panel
0084 - IP Connection Unavailable
0088 - Clocks A and B TSCs are out of sync
0099 - Incompatible HW for provisioned slot
0108 - Major IMT failure detected
0111 - Failure on both IMT A and IMT B
0114 - System IP TPS threshold exceeded

Table 3-4. Major Alarm Messages (Continued)

Message Reference Number and Trouble Text
0115 - Linkset IP TPS threshold exceeded
0132 - Loading failed: table not found
0133 - Loading failed: data read Error
0134 - Loading failed: bad checksum returned
0135 - Loading failed: GPL load timeout
0136 - Loading failed: data load timeout
0137 - Loading failed: invalid GPL
0138 - Loading failed: GPL format error
0139 - Loading failed: disk read prep error
0140 - Loading failed: disk read response error
0141 - Loading failed: disk read failed
0152 - LIM(s) have been denied STPLAN service
0162 - 1116-P, 1116-S clocks failed
0164 - 1114-S, 1116-S clocks failed
0166 - 1114-S, 1116-P, 1116-S clocks failed
0169 - 1114-P, 1116-P clocks failed
0170 - 1114-P, 1116-P, 1116-S clocks failed
0171 - 1114-P, 1114-S clocks failed
0172 - 1114-P, 1114-S, 1116-S clocks failed
0173 - 1114-P, 1114-S, 1116-P clocks failed
0179 - NDC Q.3 association is unavailable
0185 - 1116-PHS, 1116-SHS clocks failed
0187 - 1114-SHS, 1116-SHS clocks failed
0189 - 1114-SHS, 1116-PHS,1116-SHS clocks failed
0192 - 1114-PHS, 1116-PHS clocks failed
0193 - 1114-PHS, 1116-PHS,1116-SHS clks failed
0194 - 1114-PHS, 1114-SHS clocks failed
0195 - 1114-PHS, 1114-SHS,1116-SHS clks failed
0196 - 1114-PHS, 1114-SHS,1116-PHS clks failed

Table 3-4. Major Alarm Messages (Continued)

Message Reference Number and Trouble Text
0201 - REPT-LKF: remote NE loopback
0202 - REPT-LKF: HWP - too many link interrupts
0203 - REPT-LKF: lost data
0204 - REPT-LKF: XER - ERM threshold exceeded
0205 - REPT-LKF: APF - lvl-2 T1 expd (ready)
0206 - REPT-LKF: APF - lvl-2 T1 expd (not ready)
0207 - REPT-LKF: APF - lvl-2 T3 expired
0208 - REPT-LKF: APF - lvl-2 T2 expired
0209 - REPT-LKF: APF - failed proving period
0210 - REPT-LKF: OSA - received SIO
0211 - REPT-LKF: OSA - received SIN
0212 - REPT-LKF: OSA - received SIE
0213 - REPT-LKF: OSA - received SIOS
0214 - REPT-LKF: ABN - rcvd 2 of 3 invalid BSN
0215 - REPT-LKF: ABN - rcvd 2 of 3 invalid FIB
0216 - REPT-LKF: remote congestion timeout
0217 - REPT-LKF: XDA - excess acknowledge delay
0218 - REPT-LKF: COO - rcvd changeover order
0219 -REPT-LKF: false congestion restart
0220 - REPT-LKF: MTP link restart delayed
0221 - REPT-LKF: X25 link unavailable
0222 - REPT-LKF: remote FE loopback
0224 - REPT-LKF: link test failed
0230 - REPT-LKF: local blocked - thermal
0232 - REPT-LKF: remote blocked
0233 - REPT-LINK-MANUAV: local blocked
0234 - REPT-LKF: RMI remote inhibited
0235 - REPT-LINK-MGTINH: local inhibited
0236 - REPT-LKF: not aligned

Table 3-4. Major Alarm Messages (Continued)

Message Reference Number and Trouble Text
0237 - REPT-LFK: LM Timer NO-CREDIT expired
0238 - REPT-LKF: XDA-Timer NO-RESPONSE expired
0239 - REPT-LKF: MBL-local processor outage
0240 - REPT-LKF: rcvd SSCOP END-proc outage
0241 - REPT-LKF: rcvd SSCOP END-out of service
0242 - REPT-LKF: rcvd SSCOP END-protocol error
0243 - REPT-LKF:rcvd SSCOP END-mgmnt initiated
0244 - REPT-LKF: FAC - DS1 LOS failure
0245 - REPT-LKF: FAC - DS1 LOF failure
0246 - REPT-LKF: FAC - DS1 LCD failure
0247 - REPT-LKF: XER - ISERM threshold exceeded
0250 - MPS available
0276 - Insufficient HW for IP7 provisioning
0277 - AS Unavailable
0283 - LNP Ported LRNs approaching Feat. Capacity
0285 - LNP Ported NPAs approaching Feat. Capacity
0288 - RTDB Table Level 1 FAK Cap Exceeded
0291 - GLS is at minimum service limit
0297 - Incorrect port configuration
0300 -TVG Grant Failure
0318 - REPT-LKSTO: Link set prohibited
0330 - System SCCP TPS Threshold exceeded
0336 - LIM(s) have been denied SCCP service
0338 - X-LIST space full-entry(s) discarded
0341 - OAP Unavailable
0342 - SEAS UAL unavailable
0343 - SEAS X.25 Link unavailable
0345 - All SEAS UAL sessions unavailable
0348 - SEAS is at min service limit

Table 3-4. Major Alarm Messages (Continued)

Message Reference Number and Trouble Text
0354 - One OAP terminal unavailable
0358 - LSMS Q.3 association unavailable
0360 - EMS Agent unavailable
0362 - LSMS is at min. service limit
0367 - Temp Key(s) expiring soon
0369 - REPT-T1F:FAC-T1 unavailable
0372 - Major Platform Failure(s)
0373 - Major Application Failure(s)
0376 - REPT-T1F:FAC-T1 LOS failure
0377 - REPT-T1F:FAC-T1 LOF failure
0378 - REPT-T1F:FAC-T1 Remote Alarm
0379 - REPT-T1F:FAC-T1 Alarm
0381- REPT-E1F:FAC-E1 LOS failure
0382- REPT-E1F:FAC-E1 LOF failure
0383- REPT-E1F:FAC-E1 AIS detected
0384- REPT-E1F:FAC-E1 Far End failure
0385- REPT-E1F:FAC-E1 10E-3 BER failed
0387 - REPT-E1F:FAC-E1 unavailable
0390 - Illegal Address Error
0391 - Card not responding Error
0392 - OA&M IP Security feature is OFF
0403 - 1114 E1/T1 clock requires TDM-GTI
0404 - 1116 E1/T1 clock requires TDM-GTI
0405 - 1114, 1116 E1/T1 clock requires TDM-GTI
0406 - 1114 Clock selection mismatch
0407 - 1116 Clock selection mismatch
0408 - 1114, 1116 Clock selection mismatch
0422 - Insufficient extended memory
0436 - LNP ACG node overload

Table 3-4. Major Alarm Messages (Continued)

Message Reference Number and Trouble Text
0441 - Incorrect MBD - CPU
0443 - RTDB database corrupted
0446 - RTDB database capacity is 80% full
0449 - RTDB resynchronization in progress
0451 - RTDB reload required
0455 - EIR Subsystem is not available
0466- STC Network Unavailable
0473 - EROUTE System Capacity Exceeded
0482 - Card(s) have been denied EROUTE service
0514 - Standby MASP inhibited
0517 - Degraded Mode - multiple cards failed
0521 - Frame power usage reached LVL2
0901 - Card DB load timeout, check GLS card
0903 - IP Link A is down
0905 - IP Link B is down
0908 - HW cannot support purchased TPS rate
0911 - Dynamic database is inconsistent

The Minor Alarm message reference numbers and associated trouble text are shown in Table 3-5.

Table 3-5. Minor Alarm Messages

Message Reference Number and Trouble Text
0002 - Card is not running approved GPL
0004 - Card is running non-activated GPL
0021 - Clock A for card failed, B normal
0022 - Clock B for card failed, A normal
0023 - Clocks A and B for card failed
0034 - Card database is inconsistent
0035 - Card database is corrupted
0037 - Card backup database is inconsistent

Table 3-5. Minor Alarm Messages (Continued)

Message Reference Number and Trouble Text
0038 - Card backup database is corrupted
0040 - GPL is corrupted
0044 - Real time clock battery low
0048 - Terminal failed
0055 - Persistent device state tbl corrupt
0056 - Persistent device state tbl diff version
0060 - Minor customer trouble detected
0065 - Minor holdover clock trouble detected
0086 - IP Connection Congested
0102 - Motherboard BIP invalid
0107 - Minor IMT failure detected
0110 - Failure detected on one IMT bus
0116 - Link expected IP TPS threshold exceeded
0143 - System release GPL(s) not approved
0144 - System release version unknown
0145 - HS Clock A for card failed, B normal
0146 - HS Clock B for card failed, A normal
0147 - High Speed Clocks A and B for card failed
0155 - STPLAN connection unavailable
0158 - X25 no logical channels available
0160 - 1116-S clock failed
0161 - 1116-P clock failed
0163 - 1114-S clock failed
0165 - 1114-S, 1116-P clocks failed
0167 - 1114-P clock failed
0168 - 1114-P, 1116-S clocks failed
0174 - %full threshold reached -upload required
0175 - LOGBUFROVFL-SECULOG - upload required
0176 - Stdby security log - upload required

Table 3-5. Minor Alarm Messages (Continued)

Message Reference Number and Trouble Text
0183 - 1116-SHS clock failed
0184 - 1116-PHS clock failed
0186 - 1114-SHS clock failed
0188 - 1114-SHS, 1116-PHS clocks failed
0190 - 1114-PHS clock failed
0191 - 1114-PHS, 1116-SHS clocks failed
0279 - AS Restricted
0298 - Card not using config. SCTP csum method
0302 - Cooling fan failure
0304 - REPT-NMTSK-DSCD: SNM Discard Onset
0306 - SNM Overload Onset
0312 - DPC is restricted
0321 - X-LIST occupancy threshold exceeded
0344 - SEAS PVC unavailable
0346 - SEAS UAL session unavailable
0363 - OAP filesystem full
0364 - Configuration data checksum mismatch
0374 - Minor Platform Failure(s)
0375 - Minor Application Failure(s)
0398 - Local Subsystem normal,card(s) abnormal
0427 - LNP database corrupted
0428 - Backup LNP database corrupted
0429 - LNP database is inconsistent
0430 - Backup LNP database is inconsistent
0444 - RTDB database is inconsistent
0448 - RTDB database incoherent
0457 - EIR Subsystem normal,card(s) abnormal
0472 - EROUTE System Threshold Exceeded
0475 - NTP Time Unavailable

Table 3-5. Minor Alarm Messages (Continued)

Message Reference Number and Trouble Text
0477 - Congestion: Copy Function De-activated
0480 - Timestamp Invalid
0516 - Degraded Mode - 1 card failed
0522 - Frame power usage reached LVL1
0527 - Service abnormal
0531 - Insufficient HW Copy Function Inhibited
0533 - RTX is restricted
0535 - IP Connection Restricted

The Informational Alarm message reference numbers and associated trouble text are shown in Table 3-6.

Table 3-6. Information Alarm Messages

Message Reference Number and Associated Text
0003 - Alarm cleared for GPL
0005 - Alarm cleared running non-activated GPL
0009 - MASP became active
0010 - MASP became standby
0014 - Card is present
0024 - Clock A for card normal
0025 - Clock B for card normal
0026 - Clocks A and B for card normal
0033 - Card database has been corrected
0036 - Card backup database has been corrected
0039 - GPL has been corrected
0042 - LSMS bulk load complete
0045 - Real time clock battery restored
0046 - Terminal enabled
0052 - TSC sync feature is available
0054 - Standby TDM failure cleared
0057 - Persistent device state tbl corrected
0061 - Customer trouble detected

Table 3-6. Information Alarm Messages (Continued)

Message Reference Number and Associated Text
0062 - Customer trouble cleared
0066 - Holdover clock trouble cleared
0079 - Card temperature again at nominal levels
0083 - Fuse Panel alarm has cleared
0085 - IP connection available
0087 - IP Connection manually removed
0089 - Clocks A and B TSCs are resynchronized
0093 - MDAL alarm cleared
0096 - Card has been reloaded
0097 - IMT allowed
0098 - IMT inhibited
0103 - Motherboard BIP valid
0106 - IMT Bus alarm cleared
0109 - All IMT System level alarms cleared
0113 - Clock alarm(s) cleared
0117 - System IP TPS normal
0118 - Linkset IP TPS normal
0119 - Link IP TPS normal
0130 - Card successfully loaded with data
0142 - System release alarm cleared
0148 - High Speed Clock A for card normal
0149 - High Speed Clock B for card normal
0150 - STPLAN is available
0151 - STPLAN capacity normal,card(s) abnormal
0154 - STPLAN is removed
0156 - STPLAN connection available
0157 - X25 logical channels available
0159 - High Speed Clocks A and B for card normal
0177 - Security log exception cleared
0178 - Security log failed
0180 - NDC Q.3 association is available

Table 3-6. Information Alarm Messages (Continued)

Message Reference Number and Associated Text
0182 - NDC Subsystem is available
0198 - High speed clock alarm(s) cleared
0199 - OA&M IP Security feature disabled
0200 - RCVRY-LKF: link available
0223 - REPT-LKF: remote NE loopback cleared
0250 - MPS available
0264 - REPT-LINK-CGST: congestion level 0 to 1
0265 - REPT-LINK-CGST: congestion level 1 to 2
0266 - REPT-LINK-CGST: congestion level 2 to 3
0267 - RCVRY-LINK-CGST:congestion level 3 to 2
0268 - RCVRY-LINK-CGST:congestion level 2 to 1
0269 - RCVRY-LINK-CGST: congestion has cleared
0270 - REPT-LINK-CGST: discard level 0 to 1
0271 - REPT-LINK-CGST: discard level 1 to 2
0272 - REPT-LINK-CGST: discard level 2 to 3
0273 - RCVRY-LINK-CGST: discard level 3 to 2
0274 - RCVRY-LINK-CGST: discard level 2 to 1
0275 - RCVRY-LINK-CGST: discard has cleared
0278- AS Available
0280 - AS Unrestricted
0284 - LNP Ported LRNs Capacity Normal
0286 - LNP Ported NPAs Capacity Normal
0289 - RTDB Table FAK Capacity Normal
0290 - GLS is available
0293 - GLS have been removed from the system
0294 - REPT-ALMINH: alarm output PERM inhibit
0295 - REPT-ALMINH: alarm output enabled
0296 - REPT-ALMINH: alarm output TEMP inhibit
0299 - Config. SCTP csum method alarm cleared
0301 -TVG Grant Recovery
0303 - Cooling fan normal

Table 3-6. Information Alarm Messages (Continued)

Message Reference Number and Associated Text
0305 - RECVY-NMTSK-DSCD: SNM Discard Abated
0307 - SNM Overload Abated
0309 - Node is no longer isolated
0311 - DPC is allowed
0314 - Route is allowed
0315 - Route is restricted
0316 - Route is prohibited
0317 - RCVRY-LKSTO: Link set allowed
0322 - X-LIST occupancy below threshold
0324 - DPC subsystem is allowed
0327 - DPC subsystem has been deleted
0328 - SCCP is available
0329 - SCCP capacity normal, card(s) abnormal
0333 - DPC Subsystem is Normal
0335 - SCCP is removed
0337 - DPC - SS status changed
0339 - X-LIST space full condition abated
0340 - RCVRY-MTPLP-RST: Circ rte status cleared
0347 - SEAS X.25 Link is available
0351 - SEAS is available
0352 - SEAS is removed
0353 - OAP is available
0355 - LSMS is available
0357 - All OAP terminals are removed
0359 - LSMS Q.3 association available
0361 - EMS Agent available
0365 - Configuration data checksum alarm cleared
0366 - Temp Key(s) expiration alarm cleared
0380 - RCVRY-T1F:FAC-T1 available
0386- RCVRY-E1F:FAC-E1 available
0388 - Illegal Address Error has Cleared

Table 3-6. Information Alarm Messages (Continued)

Message Reference Number and Associated Text
0389 - Card responding normally
0393 - OA&M IP Security feature is ON
0394 - Local Subsystem is available
0397 - Local Subsystem is removed
0399 - RCVRY-LKSTO:Alarm clr'd by deleting SLK
0400 - Alarm cleared by deleting card
0401 - Alarm cleared by deleting SLK
0402 - Alarm cleared by deleting route
0409 - Clock configuration corrected
0423 - Card reload attempted
0425 - LNP Subsystem normal, card(s) abnormal
0426 - LNP Subsystem is available
0431 - LNP database has been corrected
0432 - Backup LNP database has been corrected
0434 - LNP Subsystem is removed
0439 - Exiting Degraded Mode
0445 - RTDB database has been corrected
0447 - RTDB database capacity alarm cleared
0455 - EIR Subsystem is not available
0458 - EIR Subsystem is available
0459 - EIR Subsystem is removed
0467- STC Network Available
0470 - EROUTE is Removed
0471- EROUTE System is Available
0474 - EROUTE capacity normal, card(s) abnormal
0476- NTP Time Available
0478 - Copy Function Activated
0479 - Link not Monitored
0481 - Timestamp Valid
0500 - Alarm being cleared for this device
0515 - Standby MASP allowed

Table 3-6. Information Alarm Messages (Continued)

Message Reference Number and Associated Text
0519 - Measurements subsystem available
0523 - Frame power usage normal
0524 - REPT-ALMINH: alarm output TIMED inhibit
0525 - Timed alm inh rdy to expire
0526 - Service is available
0530 - Service is removed
0532 - RTX is allowed
0902 - Card DB is stable
0904 - IP Link A is up
0906 - IP Link B is up
0907 - HW limiting TPS rate alarm cleared
0912 - Dynamic database is now consistent

Unsolicited Information Messages (UIM)

The system sends unsolicited information messages to the system terminal whenever there is a non-service affecting condition. This includes MSUs with invalid information, conversion failures, and/or a failed gateway screenig function. Each message has a numbered code and informational text associated with the condition.

NOTE: UIMs will be discarded if received within 250 ms of the previous UIM. This is a design constraint to prevent the OAM from being flooded by UIMs.

The message reference numbers and associated text are shown in Table 3-7.

Table 3-7. Unsolicited Information Messages

Message Reference Number and Associated Text
1000 - MTP rcvd UPU - user part is not SCCP
1001 - MTP rcvd Transfer Controlled (TFC)
1002 - MTP rcvd invalid TFC - status 0
1003 - MTP rcvd invalid H0/H1 code
1004 - MTP rcvd unknown DPC
1005 - GWS rcvd OPC that is not allowed
1006 - GWS rcvd DPC that is not allowed
1007 - GWS rcvd OPC that is blocked
1008 - GWS rcvd DPC that is blocked
1009 - GWS rcvd SIO that is not allowed
1010 - GWS rcvd a priority that is not allowed
1011 - GWS rcvd TFC, AFTPC not in routing tbl
1012 - GWS rcvd Clg Party that is not allowed
1013 - GWS rcvd Cld Party that is not allowed
1014 - GWS rcvd Translation Type not allowed
1015 - GWS rcvd SCMG with not allowed AFTPC
1016 - MTP Adj PC not in routing table
1017 - MTP Message Received for Network 255
1018 - REPT-MTPERR: MTP rcvd invalid SIO
1019 - SCCP rcvd invalid UDTS/XUDTS msg
1020 - SCCP rcvd invalid XUDT msg
1021 - SCCP rcvd invalid XUDTS msg
1022 - System Meas. limit exceeded for LSONISMT

Table 3-7. Unsolicited Information Messages (Continued)

Message Reference Number and Associated Text
1023 - SCCP rcvd unknown msg type
1024 - SCCP rcvd inv msg length
1025 - SCCP rcvd inv msg class
1026 - System Meas Limit exceeded for LSORIGNI
1027 - System Meas Limit exceeded for LSDESTNI
1028 - System Meas. Limit exceeded for ORIGNI/NINC
1029 - SCCP rcvd inv Cld Party - bad GT ind
1030 - Inh EIR SS request already outstanding
1031 - Failure Inhibiting EIR SS
1032 - Set ETS Mismatch
1033 - SCCP rcvd inv Cld Party - bad network
1034 - SCCP rcvd inv Cld Party - no SSN
1035 - SCCP rsp did not route - invalid GTI
1036 - SCCP rsp did not route - invalid TT
1037 - SCCP rsp did not route - bad Xlation
1038 - SCCP rsp did not route -SSP not True PC
1039 - SCCP rsp did not route - bad Selectors
1040 - ITU <-> ANSI translation not supported
1041 - SCCP did not route -no SSN in msg or DB
1042 - SCCP rcvd inv GT - bad Translation Type
1043 - SCCP did not route - bad translation
1044 - SCCP did not route - DPC OOS
1045 - SCCP did not route - DPC congested
1046 - SCCP did not route - DPC not in MAP tbl
1047 - SCCP did not route - SS OOS
1048 - SCCP did not route - SS congested
1049 - SCCP did not route - SS not in MAP tbl
1050 - SCCP-CNV: Unable to convert ANSI CDPA GT
1051 - SCCP-CNV: Unable to convert ANSI CGPA GT
1052 - SCCP-CNV: Unable to convert ITU CDPA GT
1053 - SCCP-CNV: Unable to convert ITU CGPA GT

Table 3-7. Unsolicited Information Messages (Continued)

Message Reference Number and Associated Text
1054 - SCCP rcvd inv LSS - bad SSN
1055 - SCCP rcvd inv SCMG - bad AFTPC
1056 - SCCP rcvd inv SCMG - bad subsystem
1057 - SCCP rcvd inv SCMG - bad length
1058 - SCCP rcvd inv SCMG - bad msg type
1059 - Telnet terminal connection disconnected
1060 - Map Screening cannot generate ATIER
1061 - Meas sync not allowed from old version
1062 - String Data Dump
1063 - SCCP screen set is too large
1064 - GWS rcvd TFP, AFTPC not in routing tbl
1065 - GWS rcvd TFR, AFTPC not in routing tbl
1066 - GWS rcvd TFA, AFTPC not in routing tbl
1067 - GWS rcvd UPU, AFTPC not in routing tbl
1068 - GWS rcvd RSP, AFTPC not in routing tbl
1069 - GWS rcvd RSR, AFTPC not in routing table
1070 - SLTC failure: invalid Point Code (OPC)
1071 - SLTC failure: invalid SLC
1072 - SLTC failure: no response
1073 - SLTC failure: bad data pattern
1074 - SCCP rcvd inv SCMG - invalid SOR
1075 - MTP: link bypassed SLT phase
1076 - SLTC failure: invalid Point Code (DPC)
1077 - SLTC failure: failed link
1078 - SLTC success: manual test passed
1079 - SLTC aborted: unable to perform test
1080 - disk measurement status unreadable
1081 - MTP: Changeback T5 timeout
1082 - Amem single bit error report
1083 - REPT COND: system alive
1084 - GWS MSU discarded by redirect function

Table 3-7. Unsolicited Information Messages (Continued)

Message Reference Number and Associated Text
1085 - GWS MSU too large to be redirected
1086 - LFS test terminated with OAM switchover
1087 - MTP RSTRT rcvd unexpected user traffic
1088 - REPT-MTP-RSTRT MTP Restart started
1089 - RCVRY-MTP-RSTRT MTP Restart completed
1090 - ITU GWY:CPC conversion failure
1091 - ITU GWY:OPC conversion failure
1092 - ITU GWY:HOH1 conversion failure
1093 - ITU GWY:rcvd msg type cannot convert
1094 - ITU GWY:Invalid ISUP msg structure
1095 - ITU GWY:GRS buffer full
1096 - ITU GWY:RSC buffer full
1097 - ITU GWY:CGB buffer full
1098 - Unexpected disk access timeout
1099 - String Data Dump
1100 - GWS rcvd H0/H1 that is not allowed
1102 - Invalid Length for Map IMEI Parameter
1103 - LSS:No Map IMEI Parameter present
1104 - IP Connection Failed
1105 - REPT EVT:IMT GPL reloading
1106 - REPT COND:IMT GPL reloading
1107 - SCCP XUDT (S) msg: Hop Counter violation
1108 - SCCP XUDT (S) msg: inv opt portion len
1109 - SCCP XUDT(S) msg: inv segmentation parm
1110 - GWS rcvd AFTPC that is not allowed
1111 - GWS rcvd TCA, AFTPC not in routing tbl
1112 - GWS rcvd TCR, AFTPC not in routing tbl
1113 - GWS rcvd TCP, AFTPC not in routing tbl
1114 - Database BACKUP started
1115 - Database RESTORE started
1116 - Database action ended - OK

Table 3-7. Unsolicited Information Messages (Continued)

Message Reference Number and Associated Text
1117 - Database action ended - FAIL
1118 - Audit of LNP backup database completed
1119 - LNP database audit - internal error
1120 - TRBL Queue is full:elements overwritten
1121 - LNP rcvd query from unknown CGPA PC
1122 - LNP rcvd query with undefined TT/SERV
1123 - LNP rcvd query with Message Relay TT
1124 - LNP Database IMPORT started
1125 - GWS rcvd CDPA that could not be RDCTd
1126 - GWS rcvd CGPA that could not be RDCTd
1127 - GWS rcvd AFTPC that could not be RDCTd
1128 - GWS rcvd TT that could not be RDCTd
1129 - Ported subs SMSC matches Home SMSC Addr
1130 - LOCREQ rcvd - IS412GSM not provisioned
1131 - Invalid digits in IS41 MAP Digits parm
1132 - SLAN DLK ping test completed
1133 - GX25 outbound data exceeds packet size
1134 - GX25 route not found
1135 - GX25 route not available
1136 - GX25 route already connected
1137 - GX25 incorrect X25 address
1138 - GX25 unsupported packet type received
1139 - GX25 unsupported MSU type received
1140 - GX25 DPC not defined
1141 - GX25 unrecognized X25 calling address
1142 - GX25 unrecognized X25 called address
1143 - GX25 cannot make connection
1144 - GX25 logical channel cleared
1145 - GX25 unexpected restart received
1146 - REPT-XLST-TIMO: X-LIST entry expired
1147 - MTP Invalid TFA received

Table 3-7. Unsolicited Information Messages (Continued)

Message Reference Number and Associated Text
1148 - MTP Invalid TFR received
1149 - SLK Level-3 T19 timer expired
1150 - SLK Inhibit Denied
1151 - SLK Inhibit Response Timeout
1152 - SLK Uninhibit Denied
1153 - SLK Uninhibit Response Timeout
1154 - MSU reception threshold exceeded
1155 - GWS MSU discard threshold exceeded
1156 - ISCC loopback success
1157 - ISCC loopback failed
1158 - ISCC loopback aborted
1159 - ISCC loopback in progress
1160 - GWS rcvd ISUP that is not allowed
1161 - GWS rcvd nonSNM DESTFLD screening msg
1162 - GWS rcvd nonSCCP CGPA/CDPA screen msg
1163 - GWS rcvd invalid GTI in TT screening
1164 - Inh LNP SS request already outstanding
1165 - Failure Inhibiting LNP SS
1166 - ACG Node Overload Level Change
1167 - LNP database audit is disabled
1168 - Audit of LNP database completed
1169 - SCCP rcvd inv TCAP portion
1170 - Loopback prevented
1171 - Loopback invalid
1172 -REPT-OVSZMSG: MTP MSU too large to rte
1173 -REPT-OVSZMSG: SCCP MSU too large to rte
1174 - Inh Local SS request alrdy outstanding
1175 - Failure Inhibiting Local SS
1177 - Cnvrsn Discard: SCCP MSU too large
1177 - Cnvrsn Discard: SCCP MSU too large
1178 - Conversion Discard: Invalid SCCP msg type

Table 3-7. Unsolicited Information Messages (Continued)

Message Reference Number and Associated Text
1179 - Cnvrsn Discard: CGPA PC alias undefined
1180 - Conversion Discard: Aft. PC alias undefined
1181 - Conversion Discard: Invalid SCMG msg type
1182 - Cnvrsn Discard - Invalid TCAP element
1183 - Cnvrsn Discard - Invalid TCAP elem't len
1184 - Cnvrsn Discard: Invalid SCCP elem't len
1185 - GTI input clock anomalies detected
1189 - SCCP did not route: DPC not in RTE table
1190 - SCCP rcvd inv Clg Party - bad GT ind
1191 - SCCP rcvd inv Clg Party - bad Selectors
1192 - SCCP translation found: XLAT=UDTS
1193 - SCCP translation found: XLAT=DISC
1195 - SCCP did not route - DPC/SS not in mapset
1196 - IP Connection Congestion Timeout
1197 - IP Connection refused
1198 - IP Connection, Cannot resolve RHOST
1199 - LNP DTH Measurements Discarded for DPC
1200 - INW ALT card as first to be preloaded
1201 - INW MAIN card as last to be reset
1202 - INW Asserted DDL inhibition
1203 - INW Card reset command issued
1204 - INW Waiting for card loading validation
1205 - INW Detected card loaded
1206 - INW Detected card reset or removed
1207 - INW Allowed card to skip DDL inhibited
1208 - INW Removed DDL inhibition
1209 - INW Need to reset/remove/inhibit card
1210 - INW Card failed to reset
1211 - INW Failed to assert DDL inhibition
1212 - INW Failed to remove DDL inhibition
1213- INW Card failed to DDL crossload

Table 3-7. Unsolicited Information Messages (Continued)

Message Reference Number and Associated Text
1214 - INW Allowed card to DDL crossload
1215 - GWS rcvd CDPA that could not be CNCFd
1216 - GWS rcvd CGPA that could not be CNCFd
1217 - GWS rcvd AFTPC that could not be CNCFd
1218 - GWS rcvd TT that could not be CNCFd
1219 - SCCP rcvd inv Cld Party - bad GT ind
1220 - SCCP rcvd inv Cld Party - bad network
1221 - SCCP rcvd inv Cld Party - no SSN
1222 - SCCP rcvd inv Cld Party - bad Selectors
1223 - SCCP did not route - bad translation
1224 - SCCP rcvd inv LSS - bad SSN
1225 - SCCP did not route - DPC OOS
1226 - SCCP did not route - DPC congested
1227 - SCCP did not route - DPC not in MAP tbl
1228 - SCCP did not route - SS OOS
1229 - SCCP did not route - SS congested
1230 - SCCP did not route - SS not in MAP tbl
1231 - SCCP Encode Failure
1232 - SCCP Encode Failure
1233 - MTP Invalid ITU TFR RCVD
1234 - LNP Day Meas. Discarded for NPANXX
1238 - Full LNP database reload initiated
1239 - LNP updates inhibited:loading mode stability
1240 - LNP updates allowed:loading mode stability
1241 - LNP Incremental Loading
1242 - Conv to intl num - Dflt CC not found
1243 - Conv to intl num - Dflt NC not found
1244 - Conv to intl num - Dflt MCC not found
1245 - Conv to intl num - Dflt MNC not found
1246 - Invalid length of conditioned digits
1247 - Conversion of MGT to IMSI not possible

Table 3-7. Unsolicited Information Messages (Continued)

Message Reference Number and Associated Text
1248 - GSM MAP Screening rcvd unknown originator
1249 - SCCP rcvd GSM MAP Opcode w/forbidden param
1250 - SCCP rcvd undefined MAP Op-Code
1251 - Measurements data copy failure
1252 - Report generation failure
1253 - Report transfer failure FTP Server
1254 - Scheduled transfer failure
1256 - MNP Circular Route Detected
1257 - DB restore has cleared and Disabled PDS
1258 - Map Screening cannot Forward MSU
1259 - Map Screening cannot Duplicate MSU
1260 - LSS: Unsupported TCAP msg type
1261 - LSS: Invalid len in transaction portion
1262 - LSS: Invalid len in dialogue portion
1263 - LSS: Invalid len in component portion
1264 - LSS: No originating transaction ID
1265 - LSS: Invalid transaction ID len
1266 - LSS: Destination transaction ID in Begin
1267 - LSS: No External element
1268 - LSS: No External Object Identifier
1269 - LSS: Not Structured Dialogue
1270 - LSS: No External ASN1-Type
1271 - LSS: No Dialogue Request
1272 - LSS: No Application Context Name
1273 - LSS: No ACN Object Identifier
1274 - LSS: No component portion
1275 - LSS: No Invoke component
1276 - LSS: No Invoke ID
1277 - LSS: No operation code
1278 - LSS: No parameter (set/sequence)
1279 - LSS: Unsupported network type

Table 3-7. Unsolicited Information Messages (Continued)

Message Reference Number and Associated Text
1280 - LSS: Unsupported SCCP msg type
1281 - LSS: No SCCP CDPA SSN
1282 - LSS: Unsupported SCCP CDPA GTI
1283 - LSS: Unsupported SCCP CGPA RI
1284 - LSS: Unknown SSP PC
1285 - LSS: No SCCP CGPA SSN
1286 - LSS: Invalid INAP CalledPartyNumber len
1287 - LSS: Unsupported ACN Object ID len
1288 - LSS: Unsupported operation code
1289 - LSS: No parameter sequence
1290 - LSS: No INAP ServiceKey parameter
1291 - LSS: No INAP CalledPartyNumber param
1292 - LSS: Parameters out of sequence
1293 - LSS: Invalid num of digits in INAP CdPN
1294 - Invalid digits in MAP MSISDN parameter
1295 - Translation PC is EAGLE 5 ISS’s
1296 - Translation PC type is ANSI
1297 - Invalid length of prefix/suffix digits
1298 - Updates inhibited: loading stability
1299 - Updates allowed: loading stability
1300 - REPT EVT: Incremental Loading
1301 - SECMTPMATE - rcvd mate PC on non C-link
1302 - SECMTPSID - rcvd MSU with OPC = SID
1303 - SECMTPSNM - no rte to OPC/AFTPC
1304 - SECSCCPSCMG - no rte to AFTPC
1305 - MTP rcvd UPU - User SCCP, Cause invalid
1306 - GSMOPTS: EIR Global Response is ON
1307 - GSMOPTS: EIR Global Response is OFF
1308 - Updates inhibited: Target -Cell CRC Fail
1309 - Updates inhibited: Source-Cell CRC Fail
1310 - System Meas. Limit exceeded for LRN

Table 3-7. Unsolicited Information Messages (Continued)

Message Reference Number and Associated Text
1311 - System Meas. Limit exceeded for NPANXX
1320 - FPT value unprovisioned for frame
1321 - Eagle RTDB Birthdate Mismatch
1322 - Eagle RTDB Levels Invalid
1323 - Eagle/Elap TN Quantity Mismatch
1324 - Eagle/Elap NPANXX Quantity Mismatch
1325 - Eagle/Elap LRN Quantity Mismatch
1326 - Eagle RTDB Depth Alert
1330 - Mismatched UA Routing Context
1331 - IP Route Table Entry Conflict
1332 - Invalid Initial M2PA FSN Received
1333 - IPGW RCVD MSG DISCARDED
1334 - IPGW TX MSG DISCARDED
1335 - Table Information
1336 - IPGW UA ERROR MSG RECEIVED
1337 - UA HEARTBEAT TIMEOUT
1338 - SCCP did not route - no PC in CgPA
1339 - SCCP did not route - no dflt Clg PC Set
1340 - REPT COND: TRBL resynch required
1490 - Telnet terminal connection successful
1491 - Terminal enabled
1492 -Terminal failed
1493 -SSH Host Keys Regenerated
1494 -SSH Host Keys Loaded
1495 - Awaiting LSMS bulk download
1496 - LSMS bulk download in progress
1497 - LSMS bulk download complete
1498 - LSMS bulk download cancelled at LSMS

Output Messages

The EAGLE 5 ISS generates output messages in response to command input or fault conditions in the EAGLE 5 ISS or in the network. The format for these messages is generally uniform. Some messages include additional data.

Network messages provide the text description of the event, and on the lines below the text line, any additional information.

Output Message Format

The following example shows the general format of an output message.

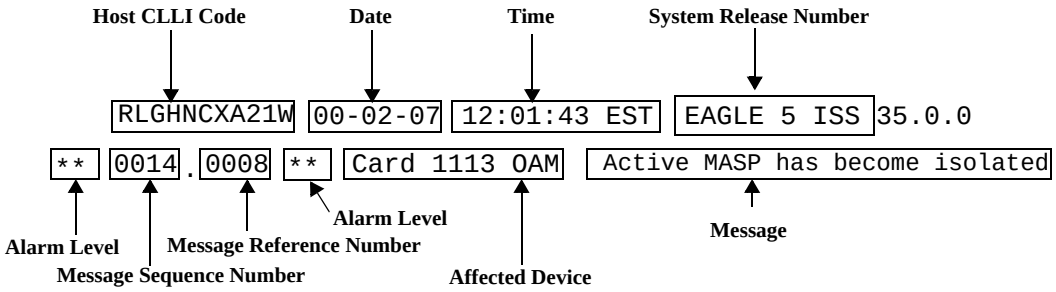

The fields in an output message (shown in the figure above) are described next:

- **Host CLLI code** - a maximum of one alpha character and ten alphanumeric characters. The CLLI code uniquely identifies the system in terms of its physical location. The CLLI code must be unique among all elements in the system.

  The **CLLI** code consists of the following:

  City = 4 characters

  State = 2 characters

  Building = 2 characters

  Equipment type = 3 characters

- **Date** - year-month-day
- **Time** - hour: minutes: second time zone
- **System Release Number** - contains a system identifier and the version ID number. The system identifier, can be `EAGLE or EAGLE5` depending on the product key enabled on the system. The version ID number has the software release specific GPL set that is expected to be installed on the system as approved loads. The format of the version ID number is in the form of ***maj.min.maint***, defined as follows:

  a. maj - the major release ID

   b. **min** - the minor release ID

   c. **maint** - the maintenance release ID.

- **Alarm Level** - a one or two character indicator of the alarm level, defined as follows:

   a. ***C** = Critical Alarm

   b. ****** = Major Alarm

   c. ***** = Minor Alarm

   d. **blank** = No Alarm.

- **Message Sequence Number** - This number is an index for all output messages. The number increments sequentially for every message. The output messages originating from the card in location 1113 has a range from 0001 through 4999. The range for location 1115 is 5000 through 9999.
- **Message Reference Number** - Messages that are associated with a specific action are numbered for reference. These messages are defined in this chapter, along with a corrective action.
- **Affected Device** - The device that caused the message to be generated. This generally describes the card type.

Network messages with additional data display the additional lines below the text string and message reference number (MRN). See individual messages for examples of output.

All network messages are non-alarm and are used to notify the user of network events. There may or may not be a procedure associated with these messages.

UAM/UIM Changes

The following tables detail the changes made to the UAM and UIM messages in recent releases. The tables list by release the UAM/UIM message number and the old and new versions of the message text.

NOTE: All output banners allow 4-digits for the time zone.

EAGLE 5 ISS Release 33.0 UAM/UIM Changes

The following are UAM/UIM messages changed by EAGLE 5 ISS 33.0.

UAM	0043
Action	Added for HC MIM.
Old data	Available for reuse
New data	Incorrect feature configuration
UAM	0044
Action	Added for HC MIM.
Old data	Available for reuse
New data	Real time clock battery low
UAM	0045
Action	Added for HC MIM.
Old data	Available for reuse
New data	Real time clock battery restored
UAM	0078
Action	Added for HC MIM.
Old data	Available for reuse
New data	Card temperature above nominal level
UAM	0079
Action	Added for HC MIM.
Old data	Available for reuse
New data	Card temperature within nominal levels
UAM	0104
Action	Added for HC MIM.
Old data	Available for reuse
New data	Card temperature exceeds high threshold

UAM	0105
Action	Added for HC MIM.
Old data	Available for reuse
New data	Card temperature within high threshold
UAM	0369
Action	Added for HC MIM.
Old data	Available for reuse
New data	REPT-T1F:FAC-T1 unavailable
UAM	0376
Action	Added for HC MIM.
Old data	Available for reuse
New data	REPT-T1F:FAC-T1 LOS failure
UAM	0377
Action	Added for HC MIM.
Old data	Available for reuse
New data	REPT-T1F:FAC-T1 LOF failure
UAM	0378
Action	Added for HC MIM.
Old data	Available for reuse
New data	REPT-T1F:FAC-T1 Remote Alarm
UAM	0379
Action	Added for HC MIM.
Old data	Available for reuse
New data	REPT-T1F:FAC-T1 Alarm
UAM	0380
Action	Added for HC MIM.
Old data	Available for reuse
New data	RCVRY-T1F:FAC-T1 available
UAM	0381
Action	Added for HC MIM.
Old data	Available for reuse
New data	REPT-E1F:FAC-E1 LOS failure

UAM	0382
Action	Added for HC MIM.
Old data	Available for reuse
New data	REPT-E1F:FAC-E1 LOF failure
UAM	0383
Action	Added for HC MIM.
Old data	Available for reuse
New data	REPT-E1F:FAC-E1 AIS detected
UAM	0384
Action	Added for HC MIM.
Old data	Available for reuse
New data	REPT-E1F:FAC-E1 Far End failure
UAM	0385
Action	Added for HC MIM.
Old data	Available for reuse
New data	REPT-E1F:FAC-E1 10E-3 BER failed
UAM	0386
Action	Added for HC MIM.
Old data	Available for reuse
New data	RCVRY-E1F:FAC-E1 available
UAM	0387
Action	Added for HC MIM.
Old data	Available for reuse
New data	REPT-E1F:FAC-E1 unavailable
UAM	0067
Action	Deleted for HC MIM.
Old data	REPT-T1F:FAC-T1 Port 1 LOS failure
New data	Available for reuse
UAM	0068
Action	Deleted for HC MIM.
Old data	REPT-T1F:FAC-T1 Port 1 LOF failure
New data	Available for reuse

UAM	0069
Action	Deleted for HC MIM.
Old data	REPT-T1F:FAC-T1 Port 1 Remote Alarm
New data	Available for reuse
UAM	0070
Action	Deleted for HC MIM.
Old data	REPT-T1F:FAC-T1 Port 1 Alarm
New data	Available for reuse
UAM	0071
Action	Deleted for HC MIM.
Old data	RCVRY-T1F:FAC-T1 Port 1 available
New data	Available for reuse
UAM	0072
Action	Deleted for HC MIM.
Old data	REPT-T1F:FAC-T1 Port 2 LOS failure
New data	Available for reuse
UAM	0073
Action	Deleted for HC MIM.
Old data	REPT-T1F:FAC-T1 Port 2 LOF failure
New data	Available for reuse
UAM	0074
Action	Deleted for HC MIM.
Old data	REPT-T1F:FAC-T1 Port 2 Remote Alarm
New data	Available for reuse
UAM	0075
Action	Deleted for HC MIM.
Old data	REPT-T1F:FAC-T1 Port 2 Alarm
New data	Available for reuse
UAM	0076
Action	Deleted for HC MIM.
Old data	RCVRY-T1F:FAC-T1 Port 2 available
New data	Available for reuse

UAM	0225
Action	Deleted for HC MIM.
Old data	REPT-E1F:FAC-E1 Port 1 Far End failure
New data	Available for reuse
UAM	0226
Action	Deleted for HC MIM.
Old data	REPT-E1F:FAC-E1 Port 1 AIS detected
New data	Available for reuse
UAM	0227
Action	Deleted for HC MIM.
Old data	REPT-E1F:FAC-E1 Port 1 LOF failure
New data	Available for reuse
UAM	0228
Action	Deleted for HC MIM.
Old data	REPT-E1F:FAC-E1 Port 1 LOS failure
New data	Available for reuse
UAM	0229
Action	Deleted for HC MIM.
Old data	REPT-E1F:FAC-E1 Port 1 10E-3 BER failed
New data	Available for reuse
UAM	0230
Action	Changed for HC MIM.
Old data	RCVRY-E1F:FAC-E1 Port 1 available
New data	REPT-LKF: local blocked - thermal
UAM	0460
Action	Deleted for HC MIM.
Old data	REPT-E1F:FAC-E1 Port 2 Far End failure
New data	Available for reuse
UAM	0461
Action	Deleted for HC MIM.
Old data	REPT-E1F:FAC-E1 Port 2 AIS detected
New data	Available for reuse

UAM	0462
Action	Deleted for HC MIM.
Old data	REPT-E1F:FAC-E1 Port 2 LOF failure
New data	Available for reuse
UAM	0463
Action	Deleted for HC MIM.
Old data	REPT-E1F:FAC-E1 Port 2 LOS failure
New data	Available for reuse
UAM	0464
Action	Deleted for HC MIM.
Old data	REPT-E1F:FAC-E1 Port 2 10E-3 BER failed
New data	Available for reuse
UAM	0465
Action	Deleted for HC MIM.
Old data	RCVRY-E1F:FAC-E1 Port 2 available
New data	Available for reuse

EAGLE 5 ISS Release 34.0 UAM/UIM Changes

The following are UAM/UIM messages changed by EAGLE 5 ISS 34.0

UAM	0443
Action	RTDB Database Corrupted Alarm Severity needs to be Major
Old data	RTDB database is corrupted
New data	RTDB database is corrupted
UIM	1189
Action	Added for Eagle Release 34.0
Old data	Available for reuse
UIM	1308
Action	Added for Eagle Release 34.0
Old data	Available for reuse
UIM	1309
Action	Added for Eagle Release 34.0
Old data	Available for reuse

UIM	1321
Action	Added for Eagle Release 34.0
Old data	Available for reuse
New Data	Eagle RTDB Birthdate Mismatch
UIM	1322
Action	Added for Eagle Release 34.0
Old data	Available for reuse
New Data	Eagle RTDB Levels Invalid
UIM	1323
Action	Added for Eagle Release 34.0
Old data	Available for reuse
New Data	Eagle/Elap TN Quantity Mismatch
UIM	1324
Action	Added for Eagle Release 34.0
Old data	Available for reuse
New Data	Eagle/Elap TN Quantity Mismatch
UIM	1325
Action	Added for Eagle Release 34.0
Old data	Available for reuse
New Data	Eagle/Elap LRN Quantity Mismatch
UIM	1326
Action	Added for Eagle Release 34.0
Old data	Available for reuse
New Data	Eagle RTDB Depth Alert
UIM	1330
Action	Added for Eagle Release 34.0
Old data	Available for reuse
New Data	Mismatched UA Routing Context

UAM	283
Action	Modified for LNP 192 Million
Old data	LNP Ported LRNs exceeds Feat. Capacity
New data	LNP Ported LRNs approaching Feat. Capacity
UAM	284
Action	Modified for LNP 192 Million
Old data	LNP Ported LRNs Capacity Normal
New data	LNP Ported LRNs Capacity Normal
UAM	285
Action	Modified for LNP 192 Million
Old data	LNP Ported NPAs exceeds Feat. Capacity
New data	LNP Ported NPAs approaching Feat. Capacity
UAM	286
Action	Modified for LNP 192 Million
Old data	LNP Ported NPAs Capacity Normal
New data	LNP Ported NPAs Capacity Normal
UAM	287
Action	Added for LNP 192 Million
Old data	Available for reuse
New data	RTDB Table Level 2 FAK Cap exceeded
UAM	288
Action	Added for LNP 192 Million
Old data	Available for reuse
New data	RTDB Table Level 1 FAK Cap exceeded
UAM	289
Action	Added for LNP 192 Million
Old data	Available for reuse
New data	RTDB Table FAK Capacity Normal

UAM	442
Action	Modifed for LNP 192 Million
Old data	RTDB database capacity is 100% full
New data	RTDB database capacity is 95% full
UAM	443
Action	Modified for RTDB Database Corrupted Alarm Severity needs to be Major
Old data	RTDB database is corrupted
New data	RTDB database is corrupted
UAM	446
Action	Modified for LNP 192 Million
Old data	RTDB database capacity is 80% full
New data	RTDB database capacity is 80% full
UAM	452
Action	Added for LNP 192 Million
Old data	Available for reuse
New data	Exceeded Service Error Threshold Lvl 1
UAM	453
Action	Added for LNP 192 Million
Old data	Available for reuse
New data	Exceeded Service Error Threshold Lvl 2
UAM	454
Action	Added for LNP 192 Million
Old data	Available for reuse
New data	Service Error Threshold Alarm Cleared
UAM	77
Action	Added for PRs 60228/60229 for Thermal alarms
Old data	Available for reuse
New data	

UAM	78
Action	Added for PRs 60228/60229 for Thermal alarms
Old data	Card temperature above nominal level
New data	
UAM	79
Action	Added for PRs 60228/60229 for Thermal alarms
Old data	Card temperature within nominal levels
New data	

EAGLE 5 ISS Release 34.3 UAM/UIM Changes

UAM	526
Action	Added for G-Flex Reroute Enhancement
Old Data	Available for reuse
New Data	Service is available
UAM	527
Action	Added for G-Flex Reroute Enhancement
Old Data	Available for reuse
New Data	Service abnormal
UAM	528
Action	Added for G-Flex Reroute Enhancement
Old Data	Available for reuse
New Data	Service is not available
UAM	529
Action	Added for G-Flex Reroute Enhancement
Old Data	Available for reuse
New Data	Service is disabled
UAM	530
Action	Added for G-Flex Reroute Enhancement
Old Data	Available for reuse
New Data	Service is removed

UIM	1332
Action	Added for M2PA RFC
Old data	Unused
New Data	Invalid Initial M2PA FSN Received

EAGLE 5 ISS Release 35.0 UAM/UIM Changes

UAM	520
Action	Added for FPBA
Old Data	Available for reuse after 30.0 upgrade not supported
New Data	Frame power usage reached LVL3
UAM	521
Action	Added for FPBA
Old Data	Available for reuse
New Data	Frame power usage reached LVL2
UAM	522
Action	Added for FPBA
Old Data	Available for reuse
New Data	Frame power usage reached LVL1
UAM	523
Action	Added for FPBA
Old Data	Available for reuse
New Data	Frame power usage normal
UAM	524
Action	Added for Timed Alarm Inhibit
Old Data	Available for reuse
New Data	REPT-ALMINH: alarm output TIMED inhibit
UAM	525
Action	Added for Timed Alarm Inhibit
Old data	Available for reuse
New Data	Timed alarm inhibit about to expire

UAM	531
Action	Added for Integrated SIGTRAN Monitoring
Old data	Available for reuse
New Data	Insufficient HW Copy Function Inhibited
UAM	532
Action	Added for MOBR
Old data	Available for reuse
New Data	RTX is allowed
UAM	533
Action	Added for MOBR
Old data	Available for reuse
New Data	RTX is restricted
UAM	534
Action	Added for MOBR
Old data	Available for reuse
New Data	RTX is prohibited
UAM	535
Action	Added for IP Signaling Serviceability
Old data	Available for reuse
New Data	IP Connection Restricted
UAM	558
Action	Added for MOBR
Old data	Available for reuse
New Data	REPT-MTPLP-DET: Circ rte det(cong)
UIM	1190
Action	Updated for Origin-Based SCCP Routing
Old data	Unused
New Data	SCCP rcvd inv Clg Party - bad GT ind

UIM	1191
Action	Updated for Origin-Based SCCP Routing
Old data	Unused
New Data	SCCP rcvd inv Clg Party - bad Selectors
UIM	1192
Action	Updated for Origin-Based SCCP Routing
Old data	Unused
New Data	SCCP translation found: XLAT=UDTS
UIM	1193
Action	Updated for Origin-Based SCCP Routing
Old data	Unused
New Data	SCCP translation found: XLAT=DISC
UIM	1195
Action	Added for Flexible Final GTT Load-Sharing (FFGTLS)
Old data	Unused
New Data	SCCP did not route: DPC/SS not in Mapset
UIM	1320
Action	Updated for EAGLE Frame Power Budget Alarm
Old data	Unused
New Data	FPT value unprovisioned for frame
UIM	1331
Action	Updated for Integrated SIGTRAN Monitoring for IPLIMx
Old data	Unused
New Data	IP Route Table Entry Conflict
UIM	1333
Action	Updated for IP Signaling Serviceability
Old data	Unused
New Data	IPGW RCVD MSG DISCARDED

UIM	1334
Action	Updated for IP Signaling Serviceability
Old data	Unused
New Data	IPGW TX MSG DISCARDED
UIM	1335
Action	Updated for Eagle RTDB Data Validation Improvements
Old data	Unused
New Data	Table Information
UIM	1336
Action	Updated for IP Signaling Serviceability
Old data	Unused
New Data	IPGW UA ERROR MSG RECEIVED
UIM	1337
Action	Updated for IP Signaling Serviceability
Old data	Unused
New Data	UA HEARTBEAT TIMEOUT
UIM	1338
Action	Updated for Origin-Based SCCP Routing
Old data	Unused
New Data	SCCP did not route - no PC in CgPA
UIM	1339
Action	Updated for Origin-Based SCCP Routing
Old data	Unused
New Data	SCCP did not route - no dflt Clg PC Set
UIM	1340
Action	Updated for Netboss and STP2 alarm mismatch
Old data	Unused
New Data	REPT COND: TRBL resynch required

EAGLE 5 ISS Release 35.1 UAM/UIM Changes

UIM	1349
Action	Added for MSUs less than 5 bytes or greater than 279 bytes.
Old data	Unused
New Data	MSU invalid size – discarded

Alarm Clearing Procedures

After an audible has sounded, it can be silenced by entering the following command:

*rls-alm:lvl=**xxxx***

where ***xxxx*** can be:
minr - Silences a minor alarm
majr - Silences a major alarm
crit - Silences a critical alarm.

All alarm types can be silenced with the following command:

rls-alm

The *rls-alm* command does not clear visual alarms on the terminals or alarm indicators on the fuse and alarm panel (FAP) or frame panels.

Once an audible alarm is silenced, any new alarm conditions cause the alarm to sound again.

Silencing a specific alarm when a lower level alarm is also present results in the next highest audible alarm level being activated. For example, the system has both critical and major alarms present. When the critical alarm is silenced, the audible major alarm begins to sound.

Retrieve Trouble Report

Application maintenance software is responsible for monitoring trouble on a card. There are three types of troubles or faults:

- Abnormal situation is being reported by software.
- An SS7 message has a problem (an invalid DPC, for example)
- A hardware fault is being reported.

Trouble reports are used by Tekelec Technical Services to help analyze problems with the EAGLE 5 ISS system. To help Tekelec Technical Services, retain any printouts of the trouble report. The output of the *rtrv-trbl* command should be reviewed with a member of Tekelec Technical Services. To display the current trouble reports, enter the following command at the system terminal:

rtrv-trbl:loc=1115:num=1:mode=c

The *mode=c* parameter provides a continuous output of the trouble reports as they occur. The *loc=* parameter specifies the active GPSM-II. The *num* parameter indicates how many trouble reports you want to display.

A typical trouble report looks similar to this:

```
tekelecstp 00-05-15  19:04:05 EST EAGLE 35.0.0
   Card 1115 Module tc_utl.c Line 1617 Class 1103 Severity 1
     00 02 f6 00 01 23 06 22 05 00
   Report Date 00-05-15  Time19:04:05
```

The trouble reports include:

- Card number
- Module name
- Line number
- Class
- Severity

Hourly Status Message Reports

The system provides hourly reports that include a list of all alarms and any devices that are manually deactivated or inhibited. The report contains the alarms that exist at the time the report is generated. Any alarms that have occurred, and have been cleared in the last hour, are not reported. The hourly status message report is automatically generated at the beginning of each hour (08:00, 09:00, and so forth). The system sends the report to all system terminals that can receive unsolicited program update messages.

The information shown in the hourly status report can also be displayed by entering one or more of the following commands.

NOTE: Systems supporting an ITU network are not configured with the LNP or SEAS features.

- *rept-stat-alm*: Displays the summary of all alarm counts.
- *rept-stat-card*: When used with the *stat* parameter, displays all cards with the state specified by the stat parameter. Refer to the *Commands Manual* for additional information on the use of parameters with this command.
- *rept-stat-cdt*: Displays the customer defined troubles.
- *rept-stat-clk*: Displays the status of the clocks.
- *rept-stat-cluster*: Displays the summary status and statistical information for all configured cluster point codes.
- *rept-stat-db*: When used with the *display=except* parameter, displays the status of the system database by displaying the database level of the cards whose database level does not match the active fixed disk current partition. Refer to the *Commands Manual* for additional information on the use of parameters with this command.
- *rept-stat-dlk*: When used with the *:stat* parameter, displays the status of the TCP/IP data links. Refer to the *Commands Manual* for additional information on the use of parameters with this command.
- *rept-stat-dstn*: When used with the *stat* parameter, displays the destination point codes with the state specified by the stat parameter. Refer to the *Commands Manual* for additional information on the use of parameters with this command.
- *rept-stat-dstn*: When used with the *mode=full* parameter, displays the subsystem status. Refer to the *Commands Manual* for additional information on the use of parameters with this command.
- *rept-stat-mps*: Displays in a single report, the overall status of the EPAP (EAGLE 5 ISS Provisioning Application Processor) subsystem.
- *rept-stat-gpl*: Displays the version of the GPL currently being used by an application and which versions of the GPL are the trial and approved versions of that GPL.
- *rept-stat-imt*: Displays the primary, secondary, and associated maintenance states of the IMT buses.
- *rept-stat-lnp*: Displays the status and statistics related to LNP.

- *rept-stat-ls*: When used with the *stat* parameter, displays the linksets that have the state specified by the stat parameter. Refer to the *Commands Manual* for additional information on the use of parameters with this command.
- *rept-stat-sccp*: Displays the status of the TSMs running the SCCP application.
- *rept-stat-seas*: Displays the status of the SEAS subsystem.
- *rept-stat-slan*: Displays the status of the ACMs that make up the STPLAN subsystem.
- *rept-stat-slk*: When used with the *stat* parameter, displays the signaling links that have the state specified by the stat parameter. Refer to the *Commands Manual* for additional information on the use of parameters with this command.
- *rept-stat-sys*: Displays the status of these items: alarms, IMT buses, signaling links (both SS7 and X.25 signaling links), linksets, destination point codes (DPCs), the maintenance and administration subsystem (MAS), clocks, TSMs loaded with the SCCP or GLS application, security subsystem, and the SEAS subsystem.
- *rept-stat-trbl*: Displays a report of all the device trouble notifications that are currently logged in the OAM RAM storage area. The severity of each alarm is also identified in the report.
- *rept-stat-trm*: Displays the status of the terminal serial ports.
- *rept-stat-xlist*: Displays the statistics related to the storage of exception list (x-list) entries.

If the message reference number (MRN) field has a null value (no field entry), the device has been manually removed from service (through *inh-card*, *canc-slk*, and so forth). There is no alarm for the device and the condition type is SCMMA (state change due to manual action). The date and time in the report refer to the date and time of the alarm or when the device was removed from service. The format of the output is in Figure 3-5.

Figure 3-5. Format of Hourly Status Message Output

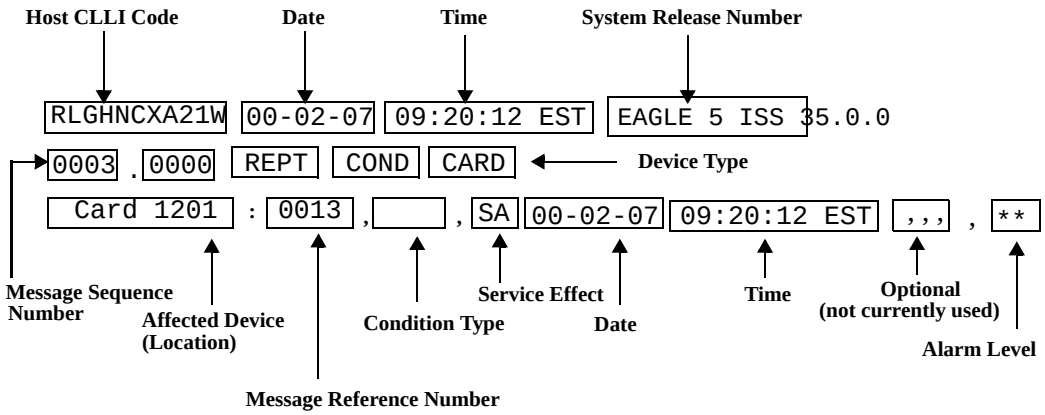

The following is a list of the device types and subsystems (with the ID of the affected device or subsystem) that the hourly status message report displays reports for. For example, if the device type being reported on is CARD, then card locations are displayed. Only those device types and subsystems that have disabled devices or alarm conditions are displayed in the hourly status message report. If there is more than one device type or subsystem to display, they are displayed in the following order.

1. CARD - the card location

2. IMT - the IMT bus A or IMT bus B

3. BITS - the BITS clock

4. TRM - the terminal port

5. SLK - the linkset name and the signaling link code (SLC)

6. DLK - the data links

7. LS - the linkset name

8. DPC - the destination point code

9. CDT - the customer defined trouble number

10. FUSE PNL - the frame ID of the system

11. SYSTEM - system

12. ALM - alarms

13. SYS CLK - system clock

14. SYS IMT - system IMT

15. SCCP SS - SCCP subsystem

16. GLS SS - GLS subsystem

17. GPL_SS - the name of the GPL

18. SLAN SS - STP/LAN subsystem

19. XLIST SS - XLIST subsystem

20. SEAS OAP - the OAP port

21. SEAS X25 - the SEAS X.25 link port

22. SEAS SS - SEAS subsystem

23. SECULOG - Security log

24. LNP SS - LNP subsystem

25. LSMS Q.3 Association - Local Services Management System Association

26. LSMS SS - Local Services Management System subsystem

27. HS System CLK - High-Speed system clock

28. EMDC Links - Element Measurement & Data Collection Application Links

29. NDC SS - Network Data Collection subsystem

30. NDC Q.3 Association - Network Data Collection Q.3 association

31. GSM SS - GSM subsystem

32. MPS (ELAP/EPAP) - Multi-Purpose Server

33. DSM Links - Database Services Module

34. INP SS - INP subsystem

35. SECURITY SS - Security subsystem

Within each device type or subsystem being reported, the subsets of the report are displayed in the following order.

1. Disabled Devices

2. Minor Alarms

3. Major Alarms

4. Critical Alarms

The *cond type* field supports five values for this release:

- SCMMA: The device has been disabled due to manual maintenance action. This condition applies regardless of a previous alarm state.
- MTCEINT-0: The reported device is off normal (ANR), but there is no alarm associated with this device. An alarmed condition for another device typically affects the state of this device. For example, out-of-service (OOS) links affect the condition of the linksets.

- MAN: The reported device is off-normal (OOS-MT), but there is no alarm associated with this device. The off-normal condition was caused by manual intervention (by entering the ent-dstn command, for example).
- NULL: No specific cond type is supported. There is sufficient information to ascertain the device condition from the report. You should use a rept-stat command for further information.
- INAUDB: The use has manually inhibited alarms for this device. The time when the device was inhibited is recorded and displayed during the hourly report.

Following is an example of the report:

```
   RLGHNCXA21W 00-07-16 12:20:12 EDT EAGLE 35.0.0
   1240.0000 REPT COND CARD
   "CARD 1101:0013,,SA,00-07-16,10:03:29,,,,**"
   "CARD 1107:,SCMMA,,00-07-16,10:03:29,,,,"
   "CARD 1113:0143,,NSA,00-07-16,10:03:29,,,*"

  RLGHNCXA21W 00-07-16 12:20:12 EDT EAGLE 35.0.0
   1241.0000 REPT COND SLK
   "SLK ls1201-0,,NSA,00-07-16,10:03:29,,,,*"
   "SLK ls1201-1,,NSA,00-07-16,10:03:30,,,,*"
   "SLK ls1202-0,,NSA,00-07-16,10:03:31,,,,*"
   "SLK ls1202-1,,NSA,00-07-16,10:03:32,,,,*"

   RLGHNCXA21W 00-07-16 12:20:12 EDT EAGLE 35.0.0
   1242.0000 REPT COND LS
   "LS ls1201:,MTCEINT-0,,00-07-16,10:03:29,,,,"
   "LS ls1202:0318,,NSA,00-07-16,10:03:29,,,,*"
   "LS ls1203:0318,,00-07-16,10:03:29,,,,*"
   "LS lsx23 :0318,,NSA,00-07-16,10:03:33,,,,*"

RLGHNCXA21W 00-07-16 12:20:12 EDT EAGLE 35.0.0
   1243.0000 REPT COND DPC
   "DPC 001-001-001:0313,,SA,00-07-16,10:03:29,,,,*C"
   "DPC 002-002-002:0313,,SA,00-07-16,10:03:30,,,,*C"
   "DPC 003-003-003:0313,,SA,00-07-16,10:03:31,,,,*C"
   "DPC 001-005-*  :0313,,SA,00-07-16,10:03:32,,,,*C"
   "DPC 006-006-006:,MAN,,00-07-16,10:03:32,,,,"

RLGHNCXA21W 00-07-16 12:20:12 EDT EAGLE 35.0.0
   1244.0000  REPT COND TRM
   "TRM 2:.SCMMA,00-07-16,10:03:29,,,,"
   "TRM 3:0048,,NSA,00-07-16,10:03:29,,,,*"
```

Maintenance System Event Logs

The *rtrv-log* command is used to retrieve records from the active or standby event logs generated by the maintenance system. This command selects these records based on a span of time or a specific log file index. There are numerous ways to sort and filter the output. Refer to the *Commands Manual* for details on using the *rtrv-log* command. A sample output follows:

```
    rtrv-log:sdate=960715:stime=220000:num=50:SNUM=106:ENUM=350

        ncralstp00001 96-07-16 10:15:29 EST  Rel XX.X.X
```

```
 Card 1113; SYS REL= XX.X.X; STP CLLI= ncralstp00001; Timezone= EST


    ****96-07-16  00:23:55****
    3161.0200    SLK 1103,B             RCVRY-LKF: link available
    ****96-07-16  01:42:18****
    3162.0155  * DLK 2117,A             STPLAN Exceeded n unavailable
    ****96-07-16  01:43:51****
    3163.0317    LSET A123456789        RCVRY-LKSTO: linkset allowed
    ****96-07-16  03:00:23****
    3165.0108 ** IMT BUS A              Major IMT fault detected
    ****96-07-16  03:37:59****
    3166.0292 *C GLS SYSTEM             GLS is not available
    ****96-07-16  07:22:06****
    3167.0313 *C DPC  021-005-000       DPC is prohibited
    ****96-07-16  09:33:17****
    3168.0348  * SEAS SYSTEM           SEAS is at minimum service
    ****96-07-16  09:34:01****
    3169.0112  * IMT SYSTEM             Major Failures detected on both
    ****96-07-16  09:35:07****
    3170.0160  * CLOCK SYSTEM           1116-S clock failed
    ****96-07-16  09:36:34****
    3171.0160  * CARD 1116 OAM          1116-S clock failed
    ****96-07-16  09:38:12****
    3173.0308 *C SYSTEM                 Node isolated due to SLK failure
    ****96-07-16  09:39:56****
    3174.0331 *C SCCP SYSTEM            SCCP is not available
    ****96-07-16  09:41:34****
    3176.0153 *C SLAN SYSTEM            STPLAN not available
    ****96-07-16  09:43:52****
    3178.0344  * SEAS X25 LINK A1       SEAS PVC unavailable
    ****96-07-16  09:44:18****
    3179.0344  * SEAS OAP A             SEAS UAL unavailable
    ****96-07-16  09:45:29****
    3180.0321  * XLIST                  X-LIST occupancy threshold Exceeded
    ****96-07-16  09:48:48****
    3181.0175  * SECURITY 1114          LOGBUFROVL-SECULOG - upload required
;

Report terminated - end of log reached.
    END OF LOG REPORT.
;
```

The *rtrv-trbltx* command is used to retrieve alarm and UIM message information including MRN (message reference number), level (for Alarms), Output Group and text.

The default *rtrv-trbltx* report displays all Alarms (in numerical order), and then all UIMs. Using the optional parameters, the capability exists to display a range of Alarms or UIMs, search for Alarms, UIMs or both message types matching a specific Output Group or sort all entries by Output Group. Refer to the *Commands Manual* for details on using the *rtrv-log* command. A sample output follows:

```
rtrv-trbltx:OUTGRP=all

    ncralstp00001 03-07-16 10:15:29 EST  Rel XX.X.X

    Card 1113; SYS REL= XX.X.X; STP CLLI= ncralstp00001; Timezone= EST

    Alarm Report
```

```
            MRN    LEVEL  OUTPUT GROUP    TEXT

------------------------------------------------------------------------
        Output Group - SYS
            0001   MAJR   SYS             Card has reset
            0002   MINR   SYS             Card is not running approved GPL
                           :
            0912   NONE   SYS             Dynamic database is now consistent

        :

        Output Group - LINK
            0155   MINR   LINK            STPLAN connection unavailable
            0156   NONE   LINK            STPLAN connection available
                           :
            0479   NONE   LINK            Link not Monitored

    UIM Report
            MRN            OUTPUT GROUP    TEXT

------------------------------------------------------------------------
        Output Group - SYS
            1000           SYS             MTP rcvd UPU - user part is not SCCP
            1001           SYS             MTP rcvd Transfer Controlled (TFC)
                           :
            1499           SYS             Invalid MRN detected
        :
        Output Group - LINK
            13nn           LINK            Example text

    END OF RTRV-TRBLTX REPORT.
;
```

Obituaries

An obituary is a set of data that describes the status of the system just before a processor restarted due to a fault in hardware or software. The data includes a register and stack dump of the processor, card location, reporting module number, software code location, and class of the fault detected. In most situations, obituary reports are generated automatically when a card is reset. Obituary reports can also be retrieved manually using the *rtrv-obit* command. Refer to the *Commands Manual* for information on using the *rtrv-obit* command. Obituaries should immediately be reported to Tekelec Technical Services at the appropriate number.
Reference: “Customer Care Center” on page 1-13

To help Tekelec Technical Services, retain any printouts of the obituary. Tekelec Technical Services can use the report to analyze the problem. A typical obituary looks like the following:

rtrv-obit:loc=1115:num=2

```
    rlghncxa03w 00-03-30 08:43:14 EST  EAGLE 35.0.0
    ------------------------------------------------------------------
    STH: Received a BOOT 286-obituary reply for 1 restart(s)
        Primary: Card 1203   Module 4608  Mod_loc  1  Class 0080
        Register Dump :
            FL=338e    CS=4a9c    IP=01c0
            AX=0000    CX=0100    DX=21c1    BX=078a
            SP=01a6    BP=01a6    SI=0fe4    DI=3ece
            DS=dce8    ES=21c1    SS=336b
        Stack Dump :
        [SP+1E]=3ece    [SP+16]=46cc    [SP+0E]=0001    [SP+06]=0246
        [SP+1C]=078a    [SP+14]=dce8    [SP+0C]=4608    [SP+04]=338e
        [SP+1A]=078a    [SP+12]=078a    [SP+0A]=0001    [SP+02]=4a9c
        [SP+18]=0100    [SP+10]=336b    [SP+08]=0080    [SP+00]=01c0

    STH: Received a BOOT 486-obituary reply for 1 restart(s)
        Primary: Card 1213   Module 0047  Mod_loc  5  Class 0241
        Register Dump :
            EFL=00000000    CS =0208        EIP=0003e75f    SS =0060
            EAX=0009a90b    ECX=0009a915    EDX=00000000    EBX=00000000
            ESP=000ddaf2    EBP=000ddb6c    ESI=00090241    EDI=00141df8
            DS =0060        ES =0060        FS =0060        GS =0060
        Stack Dump :
        [ESP+2E]=0009    [ESP+28]=1df8    [ESP+22]=0000    [ESP+1C]=a915
        [ESP+2C]=a90b    [ESP+26]=0009    [ESP+20]=0000    [ESP+1A]=0009
        [ESP+2A]=0014    [ESP+24]=a8c0    [ESP+1E]=0009    [ESP+18]=a90b
        User Data Dump :
            0a 06 00 00 46 01 08 04 00 00 00                ....F......
    Report Date:00-03-04  Time:09:19:59
    ------------------------------------------------------------------
;
```

Terminal Not Responding

When a terminal is not responding, perform the following procedure:

Procedure

1. Verify the terminal is connected to the MMI port on the back of the control shelf.

2. Verify the terminal is set up for 7-E-1.

3. From a working terminal, enter the following command to determine the port connected to the faulty terminal:

rtrv-trm

Note the port number. From the output message, verify the settings are correct.

If no working terminal is available, contact Tekelec Technical Services at the appropriate number

Reference: “Customer Care Center” on page 1-13.

---

4. Enter the following command to inhibit the terminal failing to respond.

inh-trm:trm=x

where *x* is the terminal that is not responding.

---

5. Enter the following command to re-activate the terminal failing to respond.

alw-trm:trm=x

where *x* is the terminal that is not responding. If the terminal fails to respond, go to Step 6.

---

6. Enter the following command to ensure that the other terminal devices are functioning:

rept-stat-trm

Following is an example of the output:

```
RLGHNCXA03W 00-02-07 09:50:17 EST  EAGLE 35.0.0
TRM  PST            SST           AST
1     IS-NR          Active        -----
2     IS-NR          Active        -----
3     IS-NR          Active        -----
4     OOS-MT-DSBLD   MANUAL        -----
5     IS-NR          Active        -----
6     IS-NR          Active        -----
7     IS-NR          Active        -----
8     IS-NR          Active        -----
9     IS-NR          Active        -----
10    IS-NR          Active        -----
11    IS-NR          Active        -----
12    IS-NR          Active        -----
13    OOS-MT-DSBLD   MANUAL        -----
14    OOS-MT-DSBLD   MANUAL        -----
15    OOS-MT-DSBLD   MANUAL        -----
16    OOS-MT-DSBLD   MANUAL        -----
Command Completed.
```

---

7. Verify the problem is not with the terminal by swapping terminals with a known good terminal. Make sure the physical connections are firmly seated. If the terminal works, replace the original terminal.

---

8. If a single terminal is not functioning and you have verified that the terminal is good, the connections are good, and the settings are correct, then from another terminal inhibit the terminal port with the following command:

   rmv-trm:trm=x

   where *x* is the terminal port number (1 through 16).

9. Enable the terminal port with the following command:

   rst-trm:trm=x

   where *x* is the terminal port number (1 through 16).

   If this action corrects the problem, you are done with this procedure.

10. If the terminal still does not respond, contact Tekelec Technical Services at the appropriate number.

    Reference: “Customer Care Center” on page 1-13.

Printer Not Working

Perform the following procedure if the printer is not working.

Procedure

1. Enter the following command to determine the port connected to the faulty printer:

   rtrv-trm

   Note the port number. From the output message, verify the settings are correct.

2. Verify the printer is connected, and the power is on. Run a printer test to verify the printer is operational (refer to the printer manual for printer tests). If there is no problem with the printer, continue with Step 3.
   If there is a problem with the printer, go to Step 4.

3. Enter the following command to ensure that the other terminal devices are functioning on the TDM in the active MASP:

   rept-stat-trm

   Following is an example of the output:

```
RLGHNCXA03W 00-02-07 09:50:17 EST  EAGLE 35.0.0
TRM  PST            SST           AST
1     IS-NR          Active        -----
2     IS-NR          Active        -----
3     IS-NR          Active        -----
4     OOS-MT-DSBLD   MANUAL        -----
```

```
5     IS-NR          Active        -----
6     IS-NR          Active        -----
7     IS-NR          Active        -----
8     IS-NR          Active        -----
9     IS-NR          Active        -----
10    IS-NR          Active        -----
11    IS-NR          Active        -----
12    IS-NR          Active        -----
13    OOS-MT-DSBLD   MANUAL        -----
14    OOS-MT-DSBLD   MANUAL        -----
15    OOS-MT-DSBLD   MANUAL        -----
16    OOS-MT-DSBLD   MANUAL        -----
Command Completed.
```

4. Verify the problem is not with the printer by swapping printers with a known good printer. Make sure the physical connections are firmly seated. If the printer works, replace the original.

5. If a single port is not functioning and it has been verified the printer is good, the connections are good, and the settings are correct, inhibit the printer port with the following command:

*rmv-trm:trm=**x***

where ***x*** is the printer port number (1 through 16).

6. Enable the printer port with the following command:

*rst-trm:trm=**x***

where ***x*** is the terminal port number (1 through 16).

If this action corrects the problem, you are done with this procedure.

7. If none of the ports are active, try resetting and then reseating the TDM card.

8. If the problem persists, replace the TDM card using the card replacement procedures in Appendix A.

9. If the terminal still does not respond, contact Tekelec Technical Services at the appropriate number.

Reference: “Customer Care Center” on page 1-13.

10. If only the printer port is inactive, inhibit the printer with the following command:

*rmv-trm:trm=**x***

where ***x*** is the printer number (1 through 16).

11. Enable the printer with the following command:

*rst-trm:trm=**x***

If this action corrects the problem, you are done with this procedure. If the problem persists, reseat the TDM card.

---

12. If reseating the TDM card does not correct the problem, replace the TDM card using the card replacement procedures in Appendix A.

---

13. If the printer still does not respond, contact Tekelec Technical Services contact at the appropriate number.

Reference: “Customer Care Center” on page 1-13.

Modem Not Working

Using Procomm Plus and a modem connected to a serial port on the system, the system can be accessed the remotely. If there are problems connecting to the modem, perform the following procedure:

Procedure

1. Check the physical connection. The connector to the modem should be an RS-232 connection and firmly seated in both the serial port of the system and the modem.

2. Verify the flow control is set to hardware.

3. Start Procomm Plus and check the modem settings.

   The following are possible modem settings for the recommended modem, the Motorola UDS. (Other types of modems may have different settings):

   - AT&F0 - Load factory profile and defaults
   - AT&C1 - Make DCD true
   - ATE0 - Disable command echo. If you use this command, you do not see the commands that you enter. Be careful to enter the commands correctly.
   - ATQ1 - Stop the results codes to the terminal
   - AT&W0 - Store profile in memory location 0
   - AT&Y - Select stored profile 0 on power up

Remove Removable Cartridge Stuck in Drive on MDAL

Use this procedure to remove a removable cartridge if it becomes stuck in the drive. Verify the data on the disk is correct after performing this procedure.

WARNING: Before performing any maintenance procedures on the system, make sure you wear a wrist strap connected to the wrist strap grounding point of the system.

Procedure

1. The card is located in slot 1117. Push the inject/eject clamps outward from the card's faceplate (top clamp in the "UP" position, bottom clamp in the "DOWN" position).Pull the levers away from the shelf until they are parallel to the floor. Gently pull the card towards you until the card clears the shelf.

Figure 3-6. Push Inject/Eject Clamps Outward

2. Use a paper clip or pin to eject the cartridge. Refer to Figure 3-1.

3. Open the ejector levers on the replacement card. Carefully align the card's edges with the top and bottom card guides. Then push the card along the length of the card guides until the rear connectors on the card engage the mating connectors on the target shelf backplane.

WARNING: Do not impact the faceplate in order to mate the connectors. Any impact to the card's faceplate can damage the faceplate, the pins, or the connectors.

4. Press the left edge of the card's faceplate using constant pressure until you feel the card's progress cease.

5. Push in the top and bottom inject/eject clamps. This locks the card in place and ensures a strong connection with the pins on the target shelf backplane.

Figure 3-7. Push in Inject/Eject Clamps

6. Record the activity in the site maintenance log.

Link Maintenance

Link maintenance covers the proper functionality of a signaling link, from an EAGLE 5 ISS MTP card to a remote NE.

Link Fault Sectionalization

The link fault sectionalization (LFS) feature allows maintenance personnel to perform DSOA link fault sectionalization tests, a series of far end loopback tests, from the system and identify faulty segments of an SS7 transmission path up to and including the remote network element.

The point on the signaling link at which each loopback test ends is the far end loopback point. A far end loopback point is achieved when the remote link element sends the received data back to the transmitter, allowing the transmitter to verify the received data. The remote link elements are shown in Table 3-8.

Table 3-8. Remote Link Element types

Element	Description	Valid for the Latching Link Fault Sectionalization Test?	Valid for the Non-latching Link Fault Sectionalization Test?
DSO	DSO Dataport	yes	no
OCU	OCU Dataport	yes*	yes
CSU	CSU Dataport	yes*	yes
DSU	DSU Dataport	yes*	yes
NEI	Network Element Interface	yes	no
* The OCU, CSU and DSU must be strapped or optioned to support latching link fault sectionalization loopback.			

The loopback point is moved along the signaling link path until the point is in the far end network element. Therefore, each loopback point along the link requires the initiation of one link fault sectionalization test on the SS7 LIM.

The link fault sectionalization test types for loopback tests are shown in Table 3-9.

Table 3-9. Link Fault Sectionalization Test Types

Link Fault Sectionalization Test Types	Description
Latching link fault sectionalization test (LLT-auto)	A loopback point is established using signaling commands and remains until it is removed by signaling commands.
Latching link fault sectionalization test (LLT-man)	A loopback point is established by manual means and remains until it is removed by manual means.

Table 3-9. Link Fault Sectionalization Test Types

Link Fault Sectionalization Test Types	Description
Non-latching link fault sectionalization test (NLT)	A loopback command is interleaved with the test data.

The SS7 LIM must be powered up and in service with the signaling link deactivated (OOS-MT-DSBLD) before starting the link fault sectionalization tests. No signaling traffic is on the signaling link by the SS7 LIM while the link is performing a link fault sectionalization test.

The system supports a maximum of 32 remote link elements for each SS7 link.

The system allows a maximum of 1024 SS7 simultaneous LFS tests.

Hardware Configuration

The link fault sectionalization feature requires LIM hardware configured as shown in Table 3-11. The test data is guaranteed to be a continuous data stream, and the commands provide the ability to put any element in the link into latched loopback.

The test data is provided is shown in Table 3-10. The data stream sent is verified against the data stream received and a bit error count is updated. If the bit error count is 255 or greater in one second period, the value of the bit error count remains at 255, does not overflow and the test is terminated.,

Table 3-10. Link Fault Sectionalization Test Patterns

Test Pattern	Data	Description
B2047	N/A	2047-bit Bert pattern sent until it is terminated by software.
B2047 Non Latching	N/A	2047-bit Bert pattern sent interleaved with loopback command until it is terminated by software.
B511	N/A	511-bit Bert pattern sent until it is terminated by software.
B511 Non latching	N/A	511-bit Bert pattern sent interleaved with loopback command until it is terminated by software.
OCTET	default =h’32	A continuous series of the specified octet data is sent until it is terminated by software. (Latching only)
ALTERNATE	default = h’FF	A count of 100 octets of the specified data followed by 100 octets of 0 is sent alternating until it is terminated by software. (Latching only)

LFS tests initiated by the EAGLE 5 ISS are used to test the functionality of a signaling link (SLK) from an EAGLE 5 ISS MTP card through multiple channel banks to a remote Network Element. The number of simultaneous tests that can be run on a specific card are shown in parenthesis () in Table 3-11. The maximum number of simultaneous tests for a card is determined by hardware type. Table 3-11 shows the relationship between hardware type and LFS support. A key for the values follows:

NV indicates APPL is not valid for the given hardware.

No indicates LFS testing is not supported for this combination of hardware, provisioned type, and provisioned application.

Yes indicates LFS testing is supported (max tests per card is shown in parenthesis)

Table 3-11. Hardware/Card/APPL LFS Support

		Provisioned Application	
Hardware	**Provisioned Type**	**SS7ANSI**	**CCS7ITU**
LIM-DS0	LIM-DS0	No	No
LIM-OCU	LIM-OCU	No	No
LIM-V35	LIM-V35	No	No
LIM-AINF	LIM-DS0	Yes (1)	Yes (1)
	LIM-OCU	No	No
	LIM-V35	No	No
LIM-ILA	LIM-DS0	Yes (1)	Yes (1)
	LIM-OCU	No	No
	LIM-V35	No	No
EILA	Yes (1)	Yes (1)	Yes (1)
	Yes (8)	No	No
	LIM-V35	No	No
MPL	LIM-DS0	Yes (1)	NV
MPL-T	LIM-DS0	Yes (8)	NV
LIM-E1	LIME1	No	No
E1/T1 MIM	LIME1	No	No
	LIMT1	Yes (8)	Yes (8)
	LIMCH*	Yes (8)	Yes (8)
HC MIM	LIME1	No	No
	LIMT1	Yes (64)	Yes (64)
*If associated parent card is LIMT1			

Test Indicators

Two indicators are used by the *rept-stat-slk* and *rept-stat-ls* commands to show whether the signaling link has a far end loopback condition and if a link fault sectionalization test is in progress.

When the signaling link is in a far end loopback condition:

- The primary state (PST) is *OOS-MT-DSBLD*.
- The secondary state (SST) is *LPBK*.
- The associate state (AST) is *FE*.

When a link fault sectionalization test is in progress:

- The primary state (PST) is *OOS-MT-DSBLD*.
- The secondary state (SST) is *LPBK*.
- The associate state (AST) is *LFS*.

When both the signaling link is in a far end loopback condition and a link fault sectionalization test is in progress:

- The primary state (PST) is *OOS-MT-DSBLD*.
- The secondary state (SST) is *LPBK*.
- The associate state (AST) is *FE-LFS*.

Test Report

Test results are displayed to the terminal when the link fault sectionalization tests have completed. The following is an example of a link fault sectionalization test report.

```
RLGHNCXA03W 96-04-16 16:02:05 EST  EAGLE 35.0.0
LOC = 1205  Port = B  LSN = --------  Start time = 11:10:34

PATTERN = ALTERNATE  DATA= FF  MAXERR = 10  TIME = 00:02:00

TEST STATUS = ERROR, bit error exceeded threshold.

LBP  CLLI         RLE  REP  LFST  BIT_ERROR  ERRORED_SEC   DURATION
2    rlghncxa05w  DSO  0    LLT   0          0             00:02:00
3    ------------ OCU  0    NLT   8          2             00:02:00
5    ------------ NEI  0    LLT   15         1             00:01:20
```

LFS Test Details

EAGLE 5 ISS Initiated LFS Loopback Test Details

Loopback Test Type: EAGLE 5 ISS initiated Level 1 DS0 LFS test

Link State: Link is down.

Equipment tested: Level 1 element(s) in a signaling path.

Purpose: Test the error rates of a signaling path.

Description: Sends loopback code to establish loopback and then performs BERT test for a specified period of time.

Typical use: To validate signaling path has acceptable error rate.

Testing Limits: 1024 concurrent link tests per system.

Remote Initiated LFS Loopback Test Details

Loopback Test Type: Remote Loopback FAR END initiated DS0 LFS test.

Link State: Link can be up or down.

Equipment tested: Near end H/W up to level 2 (LXVR) and far end H/W level 1 interface.

Purpose: Auto-loopback a BERT test to the far end.

Description: When receiving a loopback code, deactivate the link and go into loopback.

Typical use: Used to remotely test the far end with standard DS0 BERT tests.

Testing Limits: No limit on number of cards.

The link fault sectionalization feature uses the following commands:

- *ent-lbp* — add link fault sectionalization test data to the database.
- *chg-lbp* — change existing link fault sectionalization test data in the database.
- *dlt-lbp* — remove link fault sectionalization test data from the database.
- *rtrv-lbp* — display link fault sectionalization test data in the database.
- *act-lbp* — start a link fault sectionalization test.
- *dact-lbp* — stop a link fault sectionalization test.
- *rept-stat-lfs* — generates a report of all links that are under test.

The link fault sectionalization data is configured in the database using the parameters shown in Table 3-12.

Table 3-12. Link Fault Sectionalization Data Entry Parameters

Link Fault Sectionalization Data Entry Parameters	Description
Card Location	SS7 LIM card location
Port Number	Port a or b, and a1, a2, a3, b1, b2, b3 on the MPL
Loopback Point Number	Identifies the remote link element for setting the loopback point. Value is from 1 to 32.
CLLI	Description of the remote link element

Table 3-12. Link Fault Sectionalization Data Entry Parameters

Link Fault Sectionalization Data Entry Parameters	Description
Remote Link Element Type	The remote element type from Table 3-8.
Repetition Count	A repetition of the same element type in the link path. This is needed for configuring the link element as a latched loopback point. The value is from 0 to 31.
Link Fault Sectionalization Test Type	Link fault sectionalization test type from Table 3-9 (LFS-man not supported for the database)

Use the *act-lbp* command to start one or a sequence of link fault sectionalization tests. The data stream sent is verified against the data stream received and the bit error counts and block error counts are displayed when the test completes.

The link fault sectionalization test parameters are described in Table 3-13. If either the remote link element type, repetition count, or link fault sectionalization test type are specified with the *act-lbp* command, they must all be specified and the loopback point number parameter is ignored. Otherwise the values for remote link element type, repetition count, or link fault sectionalization test type are read from the data entered with the *ent-lbp* command using the loopback point number parameter value. The test data parameter is only valid for test patterns OCTET and ALTERNATE.

If all LBPs are selected for the loopback point number parameter, a sequential test of the LBPs, as entered in the database with the *ent-lbp* command for that signaling link, is performed until the entire signaling link has been tested. When performing a test with all LBPs, the test is aborted with the first failed test.

The test is stopped because the amount of time for the test has expired, if the bit error threshold has been exceeded, or if the number of bit errors in a one second period is 255 or greater. The time duration parameter specifies the maximum time duration for one link fault sectionalization loopback point test. The default value is one second (00:00:01) and the maximum value that can be entered is 24 hours (24:00:00). The bit error threshold parameter specifies the maximum number of bit errors allowed for one link fault sectionalization loopback point test. The default value is 56 errors and the maximum value that can be entered is 4,838,400 (24 hours x 56 errors per second).

Table 3-13. Link Fault Sectionalization Test Parameters

Parameters	Description
Card Location	SS7 LIM card location
Port /Link Number	Signaling link id a to a31 and b to b31
Loopback Point Number	The remote link element for setting the loopback point. Value is from 1 to 32, or if this parameter is not specified, all LBPs are selected.

Table 3-13. Link Fault Sectionalization Test Parameters

Parameters	Description
Remote Link Element Type	The remote element type from Table 3-8.
Repetition Count	A repetition of the same element type in the link path. The value is from 0 to 31.
Link Fault Sectionalization Test Type	Link fault sectionalization test type from Table 3-9.
Time duration	Time for one loopback point in hours, minutes, and seconds (hh:mm:ss). The value is from 00:00:01 to 24:00:00. The default value is 1 second (00:00:01).
Error threshold	Bit error threshold. The value is from 0 to 4838400. The default value is 56.
Test pattern	The test pattern from Table 3-10. The default value is B2047.
Test data	The octet to be used for test pattern OCTET or ALTERNATE only.

The *dact-lbp* command stops the link fault sectionalization test in progress and cancels any pending link fault sectionalization tests for the SS7 link. The pending tests are the next sequential LBPs for the SS7 signaling link when an entire link test was initiated.

Link Maintenance Enhancements

The Link Maintenance Enhancements feature covers the following areas:

- Allows the operator to force a card into loopback. Without this enhancement, a card will go in and out of loopback as determined by loopback codes sent by the far end.
- *tst-slk* enhancements for ATM customers. The loopback parameters for ATM cards in the *tst-slk* command act in a similar fashion as the *act-lbp* command for standard DS0 loopbacks. Other *tst-slk* enhancements not specifically related to ATM are also provided.

Command Driven Loopback

Command Driven Loopback (CDL) is the ability to locally drive a signaling link into a manual line loopback. The data received on the signaling link is echoed (transmitted) back. Commands are used to provide this capability on an individual signaling link basis. CDL allows loopback testing of a signaling link when either far-end initiated loopbacks are prevented or when a constant loopback state is desired. This command driven setting of loopback is similar in functionality to a remote initiated loopback. Table 3-14 shows a breakdown of support for Command Driven Loopback based on the MTP card type. Figure 3-8 shows a conceptual view of a signaling links network connections. Local transceiver (LXVR) is a *tst-slk* initiated test in which the line transmit is looped back to the line receive internal to the card. CDL is "LXVR in reverse;" the line receive is looped back to the line transmit.

Table 3-14. Command Driven Loopback Support

MTP Card Type	Supported	MTP Card Type	Supported
Pre-AINF	No	T1-ATM	Yes
AINF (DSO, V35, OCU)	Yes	T1 MIM (Channel)	Yes
MPL (DSO)	Yes	E1 MIM (Channel)	Yes
LIM-E1	NO	IPLIM	No
E1-ATM	Yes	IPGTWY	NO

Test Indicators

If an MTP card boots, then all links on this card, by default, are not in CDL. A link in CDL is persistent across an OAM switchover. Signaling links must be inhibited (OOS-MT-DSBLD) to perform command driven loopback. Signaling links in CDL have the following conditions:

- The primary state (PST) is *OOS-MT-DSBLD*.
- The secondary state (SST) is *LPBK*.
- The associate state (AST) is *CDL*.

Figure 3-8. Signaling Link Network Connections

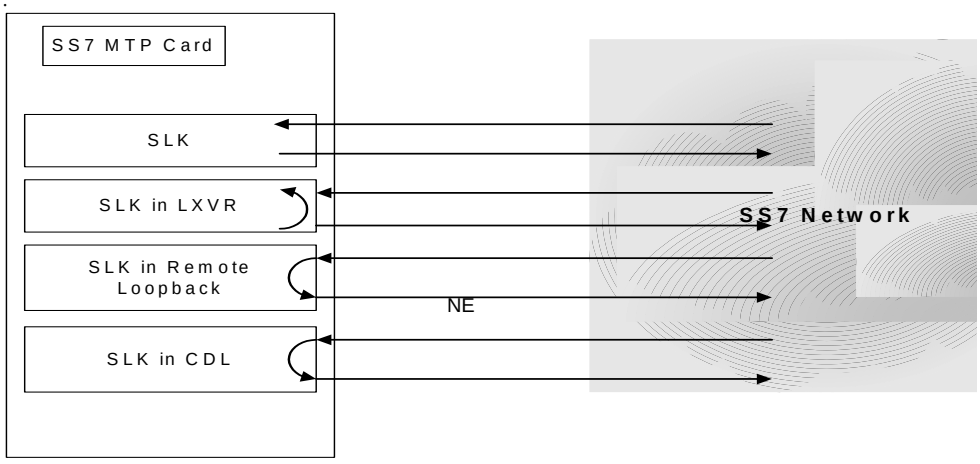

Test Signaling Link

The *tst-slk* command is used to flush out intermittent link problems that are not captured with the one shot testing. The *tst-slk* command allows for duration tests up to 24 hours, stopping of an in-progress test, and forcing the execution of a test. The *tst-slk* command is grouped into two categories, message based tests and hardware-based tests.

The SLTC and OAM tests are message based. These tests involve sending a message to the far end and expecting an appropriate reply. The LXVR, LINE, and PAYLOAD tests are hardware-based. These tests involve setting hardware registers and after an appropriate duration resetting hardware registers. To prevent overloading of a signaling link, message based tests are delayed 1 to 10 seconds between receipt of an appropriate reply and sending of the next test message. Table 3-15 shows a breakdown of support for each *tst-slk* test based on MTP card.

Table 3-15. *tst-slk* Support

MTP Card Type	*tst-slk* Test				
	SLTC	LXVR	OAM	LINE	PAYLOAD
OCU	Yes	Yes	No	No	No
V.35	Yes	Yes	No	No	No
MPL (DSO)	Yes	Yes	No	No	No
LIM-E1	Yes	Yes	No	No	No
E1-ATM	Yes	Yes	Yes	No	No
T1-ATM	Yes	Yes	Yes	Yes	Yes
T1 MIM (Channel)	Yes	No	No	No	No

Table 3-15. *tst-slk* Support (Continued)

MTP Card Type	*tst-slk* Test				
	SLTC	LXVR	OAM	LINE	PAYLOAD
E1 MIM (Channel)	Yes	No	No	No	No
IPLIM	Yes	No	No	No	No
IPGTWY	No	No	No	No	No
E1 HC MIM	Yes	No	No	No	No
T1 HC MIM	Yes	No	No	No	No

Test Signaling Links Test (tst-slk) Indicators

Signaling links performing *tst-slk* commands have a secondary state of LPBK, and an associated state corresponding to the type of loopback (SLTC, OAM, LXVR, PAYLOAD, LINE). The link must be OOS-MT-DSBLD for LXVR, PAYLOAD, and LINE tests.

If an OAM switchover occurs, while the *tst-slk* command is running, the test is aborted. If an MTP card with an active test boots then the test is aborted.

Test E1 and T1 Ports

The *tst-e1* and *tst-t1* commands initiate loopback testing of the specified E1 and T1 ports on the HC MIM card. There are 8 physical ports on the HC MIM card. This *tst-e1/t1* command is not used for any other MTP card type. Table 3-16 shows a breakdown of support for each *tst-e1/t1* test based on MTP card.

Table 3-16. *tst-e1/tst-t1* Support

MTP Card Type	*tst-e1/t1* Test	
	LXVR	LINE
E1 HC MIM	Yes	Yes
T1 HC MIM	Yes	Yes

Test E1/T1 Port (tst-e1/t1) Indicators

Signaling links performing *tst-e1/t1* commands have a secondary state of LPBK, and an associated state corresponding to the type of loopback (LXVR, LINE).

If an OAM switchover occurs, while the *tst-e1/t1* command is running, the test is aborted. If an MTP card with an active test boots then the test is aborted.

tst-slk and tst-e1/t1 Loopback Test Details

SLTC Loopback Test Details

Loopback Test Type: SLTC (EAGLE 5 ISS initiated Level 3 SS7 SLT).

Link State: Link is up.

Equipment tested: Near and far end up to Level 3.

Purpose: Test the entire path to the far end at Level 3.

Description: This will send an SLTM out and expects an SLTA back.

Typical use: To validate connectivity of a signaling path.

Testing Limits: 1024 concurrent link tests per system.

OAM Loopback Test Details

Loopback Test Type: OAM (EAGLE 5 ISS initiated Level 1 ATM test).

Link State: Link is down.

Equipment tested: Near and far end level 1 S/W and H/W including all hardware on the cards.

Purpose: Test the entire near and far end level 1 H/W by exchanging ATM cells.

Description: Sends OAM cells out to far end for 60 seconds if no errors, 2 minutes when errors are received.

Typical use: Verifies ATM cells can be exchanged between 2 signaling points.

Testing Limits: 1024 concurrent link tests per system.

LINE Loopback Test Details

Loopback Test Type: LINE (EAGLE 5 ISS initiated Level 1-2 ATM test)

Link State: Link is down.

Equipment tested: Near end H/W up to level 2 (LXVR) and far end H/W level 1 interface.

Purpose: H/W continuity check between near and far end.

Description: The following steps occur:

a. Device under test (DUT) sends T1 bit oriented code (BOC) to remote device.

b. Remote device receives BOC and programs hardware.

c. DUT attempts level 2 alignment.

d. If link aligns (level 2), test passes, else test fails.

e. DUT sends BOC to remote device to remove loopback.

f. Remote device receives BOC and re-programs hardware.

NOTE: If the DUT boots in the middle of the sequence, the remote device needs to have the link activated/de-activated and it will return to the original programming.

Typical use: Used for a link in line timing to check continuity from the near end level 2 H/W to the level 1 interface at the far end.

Testing Limits: 1024 concurrent link tests per system.

PAYLOAD Loopback Test Details

Loopback Test Type: PAYLOAD (EAGLE 5 ISS initiated Level 1-2 ATM test)

Link State: Link is down.

Equipment tested: Near end H/W up to level 2 (LXVR) and far end H/W level 1 interface.

Purpose: H/W continuity check between near and far end.

Description: The following steps occur:

a. Device under test (DUT) sends T1 bit oriented code (BOC) to remote device.

b. Remote device receives BOC and programs hardware.

c. DUT attempts level 2 alignment.

d. If link aligns (level 2), test passes, else test fails.

e. DUT sends BOC to remote device to remove loopback.

f. remote device receives BOC and re-programs hardware.

NOTE: If the DUT boots in the middle of sequence, the remote device needs to have the link activated/de-activated and it will return to the original programming

Typical use: Used for a link in master timing to check continuity from the near end level 2 H/W to the level 1 interface at the far end.

Testing Limits: 1024 concurrent link tests per system.

LXVR Loopback Test Details

Loopback Test Type: LXVR (EAGLE 5 ISS initiated Level 1 Internal card loopback)

Link State: Link is down.

Equipment tested: Local card.

Purpose: Test the near end card only.

Description: This tests the near end card up through level 2.

Typical use: To validate the Card on the EAGLE 5 ISS as good.

Testing Limits: 1024 concurrent link tests per system.

Link Maintenance Enhancments Commands

The link maintenance enhancments feature utilizes the following commands:

- *act-cdl* — this command initiates a command driven loopback for testing a signaling link.
- *dact-cdl* — this command deactivates a previously initiated Command Driven Loopback if active. If not, it will attempt to clear both near-end and far-end latched loopback points.
- *rept-stat-cdl* — this command generates a report of the signaling links currently in command driven loopback (along with the amount of time the link has been in CDL).

```
tekelecstp 96-04-16 16:02:05 EST  EAGLE 35.0.05
SLK        CDL      CDL-TIME
1102,A1    LINE     00:04:01
1201,A     PAYLOAD  01:04:11
1203,A     LINE     00:22:21
1203,B     LINE     20:04:01
1208,A     LINE     01:05:22
1211,A     PAYLOAD  00:14:01
```

- *tst-slk* — this command provides several methods for testing SLKs.
- *rept-stat-tstslk* — this command generates a report of the status of the MTP signaling links currently under test. The report includes the type of test and the elapsed time for the test. A sample output follows:

```
tekelecstp 96-04-16 16:02:05 EST  EAGLE 35.0.0
SLK        LOOPBACK   MAX-TIME   TEST-TIME
1102,A1     SLTC      01:00:00   00:04:01
1201,A      OAM       02:00:00   01:04:11
1203,A      LXVR      00:50:00   00:22:21
1203,B      LXVR      24:00:00   20:04:01
1208,A      PAYLOAD   01:10:00   01:05:22
1211,A      LINE      21:30:00   00:14:01
;
```

- *tst-e1* — this command initiates the testing of E1 Ports. The loopback parameter on this command is used to select local transceiver (lxvr) and line loopback tests. This command is rejected if a loopback test is not compatible with the port type. This command is only supported on HC MIM hardware.
- *tst-t1* — this command initiates the testing of T1 Ports. The loopback parameter on this command is used to select local transceiver (lxvr) and line loopback tests. This command is rejected if a loopback test is not compatible with the port type. This command is only supported on HC MIM hardware.

Power Down of In-Service System

WARNING: This procedure will isolate the system and put the network in a degraded mode. Contact Tekelec Technical Services at the appropriate number before any part of this procedure is performed.
Reference: "Customer Care Center" on page 1-13.

To minimize the impact on the rest of the network during power up, proper network planning must be performed. This requires having the MTP Restart Feature configured on the system. This power down procedure does not require any special configuration on the system. This procedure should be performed in emergency situations or with prior planning assistance from Tekelec Technical Services. Terminal access to the system is required to deactivate the links. If there is no terminal access to the system, proceed to Step 19.

Procedure

1. If this is an emergency power down, proceed with Step 11. Otherwise continue with Step 2.
2. Enter the following command to check the operational status of the database:
   rept-stat-db
   If necessary, refer to the *Commands Manual* to interpret the output.
3. Enter the following command to backup the database on the fixed disk:
   chg-db:action=backup:dest=fixed
   This command takes a minimum of 2 minutes to execute. It may take longer depending on other system activity that is in progress when this command is entered.

4. Verify that the databases of both MASPs are coherent by entering the following command:

rept-stat-db

The following is an example of the output from a coherent database.

```
> rept-stat-db

Command Accepted - Processing

    oflnmoxa11w 00-10-08 15:56:40 CDT EAGLE 35.0.0
    rept-stat-db
    Command entered at terminal #4.
;

    oflnmoxa11w 00-10-08 15:56:40 CDT EAGLE 35.0.0
    DATABASE STATUS: >> OK <<
            TDM 1114 ( STDBY)                 TDM 1116 ( ACTV )
             C   LEVEL    TIME LAST BACKUP     C   LEVEL    TIME LAST BACKUP
             - -------- ---------------------  - -------- ---------------------
    FD BKUP  Y   342256 00-10-07 00:40:29 CDT  Y   342256 00-10-07 00:40:29 CDT
    FD CRNT  N   342374                        Y   342375
            MDAL 1117
            ---------
```

If necessary, refer to the *Commands Manual* to interpret the output.

---

5. Insert a pre-formatted (for system data) removable cartridge into the removable cartridge drive on the MDAL card.

Reference: Chapter 2, Removable Cartridge Handling Procedures
Continue with Step 6.

---

6. Enter the following command to create a backup of the database on the removable cartridge:
chg-db:action=backup:dest=remove

---

7. Verify that the databases on the removable cartridge (RD BKUP) and the current partition of the active MASP (FD CRNT) are coherent by entering the following command:

rept-stat-db

The following is an example of the output from a coherent database.

```
> rept-stat-db

Command Accepted - Processing

    oflnmoxa11w 00-10-08 15:56:40 CDT EAGLE 35.0.0
    rept-stat-db
    Command entered at terminal #4.
;

    oflnmoxa11w 00-10-08 15:56:40 CDT EAGLE 35.0.0
    DATABASE STATUS: >> OK <<
            TDM 1114 ( STDBY)                TDM 1116 ( ACTV )
             C   LEVEL    TIME LAST BACKUP     C   LEVEL   TIME LAST BACKUP
             - -------- ---------------------  - ------- --------------------
    FD BKUP  Y  32256   00-10-07 00:40:29 CDT  Y  32256  00-10-07 00:40:29 CDT
    FD CRNT  N  32374                          Y  32375
            MDAL 1117
             - --------
```

If necessary, refer to the *Commands Manual* to interpret the output.

---

8. Remove the removable cartridge from the removable cartridge drive on the MDAL card

Reference: Chapter 2, Removable Cartridge Handling Procedures

---

9. Make an entry in the site maintenance log that a backup was performed.

---

10. Enter the following command to verify the status of the mate EAGLE 5 ISS:
rept-stat-trbl
If there is any trouble or abnormal condition, contact Tekelec Technical Services at the appropriate number.

Reference: “Customer Care Center” on page 1-13.

---

11. Enter the following command to retrieve the linksets.
rtrv-ls

---

12. Enter the following command to retrieve the links.
rtrv-slk

---

13. Enter the following command to deactivate all E-links. Use the outputs from Step 11 and Step 12.
dact-slk:loc=xxxx:port=y
where *xxxx* is the card location stenciled on the shelf of the system
and *y* is the port number on the card specified in the loc parameter.

---

14. Enter the following command to deactivate all A-links. Use the outputs from Step 11 and Step 12.
dact-slk:loc=xxxx:port=y
where *xxxx* is the card location stenciled on the shelf of the system
and *y* is the port number on the card specified in the loc parameter.

---

15. Enter the following command to deactivate all B-links. Use the outputs from Step 11 and Step 12.
dact-slk:loc=xxxx:port=y
where *xxxx* is the card location stenciled on the shelf of the system
and *y* is the port number on the card specified in the loc parameter.

---

16. Enter the following command to deactivate all D-links. Use the outputs from Step 11 and Step 12.
dact-slk:loc=xxxx:port=y
where *xxxx* is the card location stenciled on the shelf of the system
and *y* is the port number on the card specified in the loc parameter.

---

17. Enter the following command to deactivate all C-links. Use the outputs from Step 11 and Step 12.
dact-slk:loc=xxxx:port=y
where *xxxx* is the card location stenciled on the shelf of the system
and *y* is the port number on the card specified in the loc parameter.

---

18. Enter the following command to verify all links on the system are **oos-mt**. Repeat Step 13 through Step 17 for any links not having the proper status.
rept-stat-slk

---

19. Pull the fuses or open the breaker at the customer power distribution frame to turn off power to the system.

Power Up of the System

WARNING: If the reason for the EAGLE 5 ISS Power Off is unknown or if damage to the EAGLE 5 ISS is suspected, do not perform this procedure. Contact Tekelec Technical Services at the appropriate number.
Reference: "Customer Care Center" on page 1-13.

Procedure

1. Verify that there is no cartridge in the MDAL card. If there is a cartridge in the MDAL, replace the MDAL card with a spare MDAL card without a cartridge. If the spare MDAL card has a cartridge installed, remove the MDAL card. This power up will take place without a MDAL card installed.

2. At the power distribution frame, insert fuses or close the breaker to restore power to the system. All frames with the EAGLE 5 ISS shelves must be powered up. Links that were deactivated during the power down are automatically activated during the power up.

3. Enter the following commands to monitor the system during the power-up
   rept-stat-card
   rept-stat-slk
   rept-stat-trbl
   Contact Tekelec Technical Services at the appropriate number if there is any trouble or abnormal condition during system recovery

   Reference: "Customer Care Center" on page 1-13.

4. Install MDAL card and remove removable cartridge, if necessary.

UAM and UIM Troubleshooting Procedures

The following procedures are listed by message reference number (MRN). Locate the message reference number in the output message on your screen, find the MRN in this chapter, and follow the procedure to troubleshoot the problem.

NOTE: The outputs in the following procedures are examples. Some outputs have several variations. In most cases only one variation is shown.

If a linkset is in *test mode*, any GWS failure UIMs are reported, but the failed traffic is still switched through. The UIM displays a line identifying the test mode state. A linkset in test mode performs the GWS action, but does not screen out MSUs which do not pass screening. The GWSM action is on and the GWSA or GWS Activated action is off.

The system header information is in the example outputs include the following information:

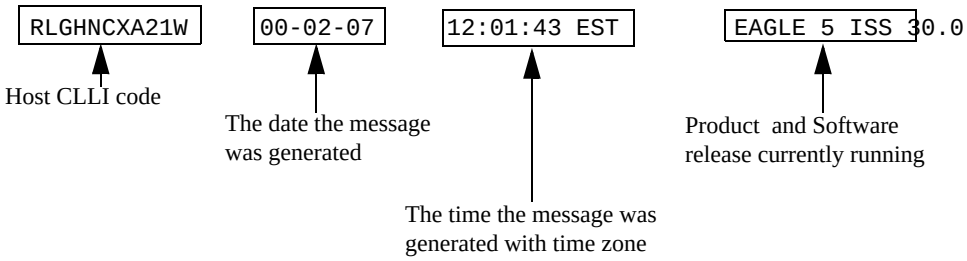

0001 - Card has reset

Description

This could have been the result of a manual reset, or software reset. If the system software detects trouble with a card, the processors on the card (application or communication processors) are reset by software. The system software is responsible for this function.

Example

```
          RLGHNCXA21W 94-02-07 12:01:43 EST  EAGLE 35.0.0
     **   0014.0001 ** CARD 1113 OAM   Card has reset
```

Alarm Level

Major

Procedure

1. The system recovers from this condition by reloading the card software. If the card continually resets, replace the affected card.

The recovery message sequence should be similar to:

```
**  0057.0001 ** CARD 1201 SS7ANSI   Card has reset
    0058.0096    CARD 1201 SS7ANSI   Card has been reloaded
    0059.0236    SLK 1201,A nc00027  REPT-LKF: not aligned
    0060.0236    SLK 1201,B nc00027  REPT-LKF: not aligned
    0061.0200    SLK 1201,A nc00027  RCVRY-LKF: link available
    0062.0200    SLK 1201,B nc00027  RCVRY-LKF: link available
```

2. If the card resets without explanation or continues to reset, contact Tekelec Technical Services at the appropriate number.

Reference: “Customer Care Center” on page 1-13.

NOTE: See Appendix A for procedures on replacing cards.

0002 - Card is not running approved GPL

Description

This alarm indicates a card or cards are running a generic program load (GPL) other than the approved GPL. This is determined by a system audit, which compares the GPL running on each card with the approved version for each card type. If any card(s) are running a GPL other than its approved GPL, an alarm is created. Only one alarm for each card application is displayed.

Example

```
     RLGHNCXA21W 94-02-07 12:01:43 EST  EAGLE 35.0.0
*    0014.0002  * GPL SYSTEM EOAM   Card is not running approved GPL
```

NOTE: There are three procedures for this output. Choose the procedure based on the GPL System indicated in the alarm message. Refer to the following to help determine the correct procedure:

1. **The Procedure for all cards without Flash Memory should be used if the following are indicated in the output as the GPL System.**

SS7ANSI	VXWSLAN
CCS7ITU	EMDC
SCCP	IPLIM
VSCCP	SS7IPGW
GLS	IPGWI
EOAM	IPLIMI
SS7GX25	SS7ANSI
STPLAN	CCS7ITU
IMT	IPS
ATMANSI	MCP
EBDABLM	EROUTE
EBDADCM	ATMITU
SS7ML	SS7HC

2. **The Procedure for cards with Flash Memory (Except HMUX and HIPR) should be used if the following are indicated in the output as the GPL System.**

BLBIOS	BPMPL
BLCPLD	BPMPLT
BLDIAG	BPHCAPT
BLVXW	IMTPCI
BPHCAP	PLDE1T1
BPDCM	PLDPMC1

3. **The Procedure for HMUX and HIPR cards should be used if the following are indicated in the output as the GPL System.**

BPHMUX	HIPR

Alarm Level

Minor

Procedure for all cards without Flash Memory

CAUTION: This procedure causes the identified card to reload, and should be used only during periods of low traffic or the maintenance window.

1. Enter the following command to verify the GPLs running for the card identified in the output.

   *rept-stat-gpl:gpl=**xxxxxxx***

   where ***xxxxxxx*** is the GPL identified in the output.

   Following is an example of the output

```
tekelecstp 03-07-03 16:53:23 EST  EAGLE5 32.0.0-55.0.0
GPL Auditing  ON

GPL        CARD      RUNNING            APPROVED      TRIAL
SS7HC      1203      025-015-001 ALM   025-015-000   -----------
```

   NOTE: Mismatched GPLs should occur only during upgrades or running a trial GPL.

2. Verify GPL Auditing is **ON**. If not, enter the following command:

   chg-gpl:audit=on

3. Enter the following command to reload the card:

init-card:loc=xxxx

where **xxxx** is the card location stenciled on the shelf of the EAGLE 5 ISS.
NOTE: Wait for the card to finish loading before continuing.

---

4. Enter the following command to verify the approved GPLs match the running GPLs:

*rept-stat-gpl:gpl=**xxxxxxx***

where ***xxxxxxx*** is the GPL identified in the output.

---

5. If the GPLs match, you have completed this procedure.
If the GPLs do not match, continue with Step 6.

---

6. Enter the following command to determine which cards are in alarm condition (indicated by the acronym ALM in the *rept-stat-gpl* display):

rept-stat-gpl

7. Note which cards are in an alarm condition and call Tekelec Technical Services at the appropriate number.

Reference: “Customer Care Center” on page 1-13.

Procedure for cards with Flash Memory (Except HMUX and HIPR)

CAUTION: This procedure causes the identified card to reload, and should be used only during periods of low traffic or the maintenance window.

1. Enter the following command to verify the GPLs running for the card identified in the output.

*rept-stat-gpl:gpl=**xxxxxxx***

where ***xxxxxxx*** is the GPL identified in the output.

Following is an example of the output

```
tekelecstp 03-07-03 16:53:23 EST  EAGLE5 35.0.0-55.0.0
GPL Auditing  ON

GPL        CARD      RUNNING            APPROVED      TRIAL
BLCPLD     1203      025-015-001 ALM   025-025-000   -----------
```

NOTE: Mismatched GPLs should occur only during upgrades or running a trial GPL.

2. Verify GPL Auditing is **ON**. If not enter the following command:

chg-gpl:audit=on

3. Enter the following command to change the state of the appropriate card to the out of service - maintenance disabled state:

*inh-card:loc=**xxxx**:force=yes*

where **xxxx** is the card location stenciled on the shelf of the EAGLE 5 ISS.

Following is an example of the output:

```
RLGHNCXA03W  00-06-05  11:11:28 EDT  EAGLE 35.0.0
Card has been inhibited.
```

4. Enter the following command to load the approved GPL onto the inhibited card.

*init-flash:code=appr:loc=**xxxx***

where **xxxx** is the card location used in Step 3.

Following is an example of the output using card location 1302:

```
    RLGHNCXA03W  00-06-05  11:11:28 EDT  EAGLE 35.0.0
    FLASH Memory Downloading for card 1114 Started.
;
    RLGHNCXA03W  00-06-05  11:11:28 EDT EAGLE 35.0.0
    BPDCM Downloading for card 1114 Complete.
;
    RLGHNCXA03W  00-06-05  11:11:28 EDT  EAGLE 35.0.0
    Command Completed.
```

When the *init-flash* command has completed successfully, the card specified in the *init-flash* command is rebooted.

---

5. Enter the following command to put the card that was inhibited in Step 3 back into service:

alw-card:loc=xxxx

where **xxxx** is the card location used in Step 3.

Following is an example of the output:

```
RLGHNCXA03W  00-06-05  11:11:28 EDT  EAGLE 35.0.0
Card has been allowed.
```

NOTE: Allow the card to run for 5 minutes before continuing.

---

6. Enter the following command to activate the GPL loaded onto the card in Step 4:

*act-flash:loc=**xxxx***

where **xxxx** is the card location used in Step 4.

Following is an example of the output using card location 1114:

```
    RLGHNCXA03W  00-06-05  11:11:28 EDT  EAGLE 35.0.0
    FLASH Memory Activation for card 1114 Completed.
;
    RLGHNCXA03W  00-06-05  11:11:28 EDT  EAGLE 35.0.0
    Command Completed.
```

---

7. Enter the following command to verify the approved GPLs match the running GPLs:

*rept-stat-gpl:gpl=**xxxxxxx***

where ***xxxxxxx*** is the GPL identified in the output.

---

8. If the GPLs match, you have completed this procedure.
If the GPLs do not match, continue with Step 9.

---

9. Enter the following command to determine which cards are in alarm condition (indicated by the acronym ALM in the *rept-stat-gpl* display):

rept-stat-gpl

---

10. Note which cards are in an alarm condition and call Tekelec Technical Services at the appropriate number.

Reference: “Customer Care Center” on page 1-13.

Procedure for HMUX and HIPR cards

CAUTION: This procedure causes the identified card to reload, and should be used only during periods of low traffic or the maintenance window.

1. Enter the following command to verify the GPLs running for the card identified in the output.

*rept-stat-gpl:gpl=**xxxxxx***

where ***xxxxxxx*** is the GPL (HIPR or BPHMUX) identified in the output.

Following is an example of a BPHMUX output:

```
tekelecstp 03-07-03 16:53:23 EST  EAGLE5 35.0.0-55.0.0
GPL Auditing  ON

GPL        CARD  RUNNING      APPROVED         TRIAL
BPHMUX    1209  028-005-000  028-005-000      -----------
BPHMUX    1210  028-005-000  028-005-000      -----------
BPHMUX    1309  028-004-000  028-005-000 ALM  -----------
BPHMUX    1310  028-005-000  028-005-000      -----------
```

NOTE: Mismatched GPLs should occur only during upgrades or running a trial GPL.

2. Verify GPL Auditing is **ON**. If not enter the following command:

chg-gpl:audit=on

3. Enter the following command to load the GPL onto the HMUX card:

*init-flash:code=appr:loc=**xxxx***

where **xxxx** is the HMUX/HIPR card location with the alarm condition in Step 1.

Following is an example of the output using card location 1309:

```
    RLGHNCXA03W  00-06-05  11:11:28 EDT  EAGLE 35.0.0
    FLASH Memory Downloading for card 1309 Started.
;
    RLGHNCXA03W  00-06-05  11:11:28 EDT EAGLE 35.0.0
    BPHMUX Downloading for card 1309 Complete.
;
    RLGHNCXA03W  00-06-05  11:11:28 EDT  EAGLE 35.0.0
    Command Completed.
```

4. Enter the following command to initialize the HMUX/HIPR card.

CAUTION: This command boots the HMUX/HIPR processor and brings down the respective IMT bus temporarily (approximately 10 seconds) until the HMUX/HIPR card comes back into service.

init-mux:loc=xxxx:bus=y

where **xxxx** is the card location used in

y is the bus

NOTE: Allow the card to run for 5 minutes before continuing.

---

5. Enter the following command to activate the trial GPL loaded onto the card in Step 4:

*act-flash:loc=**xxxx***

where **xxxx** is the card location used in Step 3.

Following is an example of the output using card location 1309:

```
    RLGHNCXA03W  00-06-05  11:11:28 EDT  EAGLE 35.0.0
    FLASH Memory Activation for card 1309 Completed.
;
    RLGHNCXA03W  00-06-05  11:11:28 EDT  EAGLE 35.0.0
    Command Completed.
```

---

6. Enter the following command to verify the approved GPLs match the running GPLs:

*rept-stat-gpl:gpl=**xxxxxx***

where ***xxxxxxx*** is the GPL (HIPR or BPHMUX) identified in the output.

Following is an example of a BPHMUX output:

```
tekelecstp 03-07-03 16:53:23 EST  EAGLE5 35.0.0-55.0.0
GPL Auditing  ON

GPL        CARD  RUNNING      APPROVED         TRIAL
BPHMUX    1209  028-005-000  028-005-000      -----------
BPHMUX    1210  028-005-000  028-005-000      -----------
BPHMUX    1309  028-005-000  028-005-000      -----------
BPHMUX    1310  028-005-000  028-005-000      -----------
```

---

7. If the GPLs match, you have completed this procedure.
If the GPLs do not match, continue with Step 8.

---

8. Enter the following command determine which cards are in alarm condition (indicated by the acronym ALM in the *rept-stat-gpl* display):

rept-stat-gpl

---

9. Note which cards are in an alarm condition and call Tekelec Technical Services at the appropriate number.

Reference: “Customer Care Center” on page 1-13.

0003 - Alarm cleared for GPL

Description

This message indicates that all the cards of a specific type are running the approved GPL and the alarm condition, specified by message “0002 - Card is not running approved GPL” has been cleared.

Example

```
RLGHNCXA21W 94-02-07 12:01:43 EST  EAGLE 35.0.0
0014.0003    GPL SYSTEM OAM   Alarm cleared for GPL
```

Alarm Level

No alarm condition. The message is informational only.

Procedure

1. This message indicates a previous fault has been corrected. No further action is necessary.

0004 - Card is running non-activated GPL

Description

This alarm indicates a card or cards are running a non-activated *Trial* or *Approved* generic program load (GPL). This output is expected when changing a flash GPL. This alarm occurs after a successful download to the card, and the card boots.This is determined by a system audit, which compares the GPL running on each card with the activated version for each card type. If any card(s) are running a GPL other than its activated GPL, an alarm is created. Only one alarm for each card application is displayed. **UAM 0002** might also be produced.

Example

```
   RLGHNCXA21W 94-02-07 12:01:43 EST  EAGLE 35.0.0
*  0014.0004  * GPL SYSTEM BPDCM   Card is running non-activated GPL
```

Alarm Level

Minor

Procedure

1. Enter the following command to verify the release GPLs match the GPLs on the disk:

rtrv-gpl

NOTE: Mismatched GPLs should occur only during upgrades or running a trial GPL.

2. Enter the following command to determine which cards are in alarm condition (indicated by the acronym ALM in the *rept-stat-gpl* display):

rept-stat-gpl

3. If the GPLs do not match from Step 1, note which cards are in an alarm condition and call Tekelec Technical Services at the appropriate number.

Reference: “Customer Care Center” on page 1-13

0005 - Alarm cleared running non-activated GPL

Description

This message indicates that all the cards of a specific type are running the non-activated GPL and the alarm condition, specified by message “0004 - Card is running non-activated GPL” has been cleared.

Example

```
RLGHNCXA21W 94-02-07 12:01:43 EST  EAGLE 35.0.0
0014.0005    GPL SYSTEM BPDCM   Alarm cleared running non-activated GPL
```

Alarm Level

No alarm condition. The message is informational only.

Procedure

1. This message indicates a previous fault has been corrected. No further action is necessary.

0008 - Active MASP has become isolated

Description

This messages indicates the active MASP has a fault and the system switched to the standby MASP. This could be caused by the MASP losing a connection to the IMT, a failure with the GPSM-II card, or a card reset.

Example

```
     RLGHNCXA21W 00-02-07 12:01:43 EST  EAGLE 35.0.0
**   0014.0008  ** CARD 1113 OAM        Active MASP has become isolated
```

Alarm Level

Major

Procedure

1. Enter the following command to check the status of the IMT:

rept-stat-imt

If the IMT is at fault, verify the IMT cables are connected to the shelf backplane (refer to the *Installation Manual* for cable locations).

2. If the state of the IMT appears good but the GPSM-II boots repeatedly, try reseating the GPSM-II card. If the problem persists, replace the GPSM-II card.

NOTE: See Appendix A for procedures on replacing cards.

3. If the trouble does not clear, obtain any obituary reports and notify Tekelec Technical Services at the appropriate number.

Reference: “Customer Care Center” on page 1-13

0009 - MASP became active

Description

This message indicates which MASP is active.

Example

```
RLGHNCXA21W 00-02-07 12:01:43 EST  EAGLE 35.0.0
0014.0009   CARD 1113 OAM   MASP became active
```

Alarm Level

No alarm condition. The message is informational only.

Procedure

1. This message indicates a previous fault or condition has been corrected. No further action is necessary.

0010 - MASP became standby

Description

This message indicates which MASP is standby.

Example

```
RLGHNCXA21W 00-02-07 12:01:43 EST  EAGLE 35.0.0
0012.0010   CARD 1113 OAM   MASP became standby
```

Alarm Level

No alarm condition. The message is informational only.

Procedure

1. This message indicates a previous fault or condition has been corrected. No further action is necessary.

0011 - Entering forced simplex mode

Description

This message indicates the active OAM card found itself in a forced simplex mode of operation while the active OAM LNP updating option was on (turned on with the **chg-lnpopts:frcsmplx=yes** command). A simplex mode of operation means the active OAM card cannot communicate with its standby OAM card.

In a forced simplex mode, after five minutes LNP updates are allowed to be provisioned on the active OAM only. The active OAM accepts updates, and the standby OAM is not able to receive LNP updates, leaving the standby database in the state of being incoherent, diff level, or unstable.

When the standby OAM eventually resumes communication, the active OAM remains in forced simplex mode until the standby OAM LNP database is repaired from the active OAM. The forced simplex mode is automatically removed following the repair of the standby database.

The forced simplex mode of operation can also be removed with the command **chg-lnpopts:frcsmplx=no**. However, active OAM LNP updates may be prohibited until the standby database is repaired.

Example

```
      RLGHNCXA21W 03-08-28 11:02:30 EST  EAGLE 35.0.0
**    0100.0011    SYSTEM     Entering forced simplex mode
```

Alarm Level

Major

Procedure

1. If you choose to exit forced simplex mode (that is, not allowing LNP updates on the active OAM only), enter the following command to remove the forced simplex status from the LNP options:

   chg-lnpopts:frcsmplx=no

   You may elect to stop here, or you may elect to continue with Step 3.

2. If you choose, you may remain in forced simplex mode (accepting LNP updates in the active OAM card without communicating with the standby card) until the standby OAM is replaced, its database is corrected, or communication is restored.

   Continue with Step 3.

3. When you choose to resume the duplex mode of operation with the active and standby OAM cards, you must restore communications with the standby card and repair the standby LNP database, as required. Enter the following command to verify the databases:

rept-stat-db

Following is an example of the output:

```
> rept-stat-db

Command Accepted - Processing

     oflnmoxa11w 98-10-08 15:56:40 CDT EAGLE 35.0.0
    rept-stat-db
    Command entered at terminal #4.
;

    oflnmoxa11w 98-10-08 15:56:40 CDT EAGLE 35.0.0
DATABASE STATUS: >> OK <<
    TDM 1114 ( STDBY)                    TDM 1116 ( ACTV )
         C   LEVEL    TIME LAST BACKUP     C   LEVEL    TIME LAST BACKUP
         - -------- --------------------  - -------- --------------------
FD BKUP  Y   342256 98-10-07 00:40:29 CDT  Y   342256 98-10-07 00:40:29 CDT
FD CRNT  N   342374                        Y   342375
       MDAL 1117
         - --------
```

(Refer to the *Commands Manual* to interpret the output.)

---

4. Check the status of the standby database in the output of the previous step.

- If the report shows the standby OAM is present, go to Step 7.
- If the report does not show the standby OAM card to be present, continue to Step 5.

---

5. Enter the following command to initialize the standby OAM card:

init-card:loc=xxxx

where xxxx is the standby OAM (1113 or 1115) number.

---

6. If the problem is still not corrected, reseat the GPSM-II card. If the OAM still does not respond, replace the GPSM-II card.

NOTE: See Appendix A, *Card Removal/Replacement Procedures* **for card replacement procedures.**

---

7. Once the card is known to be operational, if the standby OAM card needs to be repaired, resynchronize the standby card's LNP database with the active OAM card with this command:

chg-db:action=repair

---

8. If you choose to restore the status of the active OAM LNP updating options (especially if you turned it off in Step 1), issue the command:

chg-lnpopts:frcsmplx=yes

---

9. If the trouble does not clear, obtain any obituary reports and notify Tekelec Technical Services at the appropriate number.

Reference: “Customer Care Center” on page 1-13

0013 - Card is isolated from the system

Description

This indicates a card has become isolated and is unable to communicate to other cards in the system. This could be caused by a defective card, a power failure occurred on the card, or the system software has ordered a reset.

This also appears when the card has been manually reset by a command.

Example

```
      RLGHNCXA21W 94-02-07 12:01:43 EST  EAGLE 35.0.0
**    0014.0013  **  CARD 1113 OAM   Card is isolated from the system
                     ASSY SN:  102199815a1234
```

Alarm Level

Major

Procedure

1. Enter the following command *t*o check the status of the card.

rept-stat-card:loc=x:mode=full

where **x** is the card location stenciled on the shelf of the system.

Following is an example of the possible output using card 1106:

```
      integrat40 00-05-24 10:37:22 EST EAGLE 35.0.0
          CARD   VERSION      TYPE      APPL      PST           SST     AST
          1106   021-101-000  TSM       SCCP      IS-NR         Active  -----
            ALARM STATUS       = No Alarms.
            IMT VERSION        = 021-001-000
            PROM VERSION       = 021-001-000
            IMT BUS A          = Conn
            IMT BUS B          = Conn
            CLOCK A            = Active
            CLOCK B            = Idle
            CLOCK I            = Idle
            MBD BIP STATUS     = valid
            DB STATUS          = valid
            DBD MEMORY SIZE    = 64M
            SCCP SERVICE       = 1201, , 1214, 1215, 1217, 1102
            SCCP % OCCUP       = 0%
            SLK A   PST        = OOS-MT           LS=ls11234567  CLLI=
            SLK B   PST        = OOS-MT           LS=ls11345678  CLLI=
            SNM    TVG RESULT  = 24 hr: ------,  5 min: ------
            SLAN   TVG RESULT  = 24 hr: ------,  5 min: ------
            SCCP   TVG RESULT  = 24 hr: ------,  5 min: ------
          Command Completed.
```

2. If only one card is isolated, wait to see if the card is recovering. If not, reset the card.

3. If resetting the card does not clear the fault, reseat the card.

4. If reseating the card does not clear the fault, replace the card.

5. If the alarm still does not clear, call Tekelec Technical Services at the appropriate number.

   Reference: “Customer Care Center” on page 1-13

   NOTE: See Appendix A for procedures on replacing cards.

0014 - Card is present

Description

The card indicated was isolated from the system, but is now communicating with the active MASP. The maintenance software has begun recovery action.

Example

```
RLGHNCXA21W 00-02-07 12:01:43 EST  EAGLE 35.0.0
0014.0014    CARD 1201 SS7ANSI   Card is present
             ASSY SN:  102199815a1234
```

Alarm Level

No alarm condition. The message is informational only.

Procedure

1. No immediate action is required. The maintenance software is attempting to recover the card by reinitialization of the card.

0018 - Exiting forced simplex mode

Description

This UAM indicates that forced simplex mode is being exited. This message results from either the **chg-lnpopts** command turning off the forced simplex mode or the automatic ending of the forced simplex mode after the repair of the standby OAM database.

A forced simplex mode of operation occurs when the active OAM card cannot communicate with its standby OAM card while the active LNP option was on (turned on with the **chg-lnpopts:frcsmplx=yes** command). This mode allows provisioning of LNP updates in the active OAM database when communication is lost with its standby OAM card.

Example

```
      RLGHNCXA21W 03-08-28 11:02:30 EST  EAGLE 35.0.0
**    0100.0018    SYSTEM     Exiting forced simplex mode
```

Alarm Level

No alarm condition. The message is informational only.

Procedure

1. This message indicates either the **chg-lnpopts:frcsmplx=no** command was successfully executed or an automatic response resulted from a successful repair of the standby OAM database. No further action is necessary.

0021 - Clock A for card failed, B normal

Description

This indicates that the A clock signal for the indicated card is not present.

Example

```
    RLGHNCXA21W 94-02-07 12:01:43 EST  EAGLE 35.0.0
*   0014.0021  * CARD 1116 OAM   Clock A for card failed, Clock B normal
```

Alarm Level

Minor

Procedure

1. Enter the following command to determine the status of the clock.

rept-stat-clk

The output indicates how many cards are using the specified clock, and how many cards are reporting fault with the specified clock.

Following is an example of the possible output:

```
tekelecstp 00-04-23 13:34:15 EST EAGLE 35.0.0
    CARD LOC= 1114 (Active   )    CARD LOC= 1116 (Isolated )
    PRIMARY BITS   = Active       PRIMARY BITS   = -----
    SECONDARY BITS = Idle         SECONDARY BITS = -----
                                  PST           SST       AST
    SYSTEM CLOCK                  IS-NR         ACTIVE    ALMINH
    # Cards using CLK A = 009     # Cards with bad CLK A = 000
    # Cards using CLK B = 000     # Cards with bad CLK B = 009
    # Cards using CLK I = 000
    Command Completed.
```

CAUTION: Resetting, reseating, or replacing a LIM will cause both links on the card to fail. If the card is a LIM, place the links on the LIM out of service by entering the *dact-slk* command.

2. If only one card is reporting fault, reset the card.

3. If the fault has not cleared, reseat the card.

4. If the fault has not cleared, replace the card.

5. If the fault has not cleared, replace the TDM card in MASP A.

---

6. If more than one card is reporting fault with the designated clock, check the clock cable connection at the shelf backplane (refer to the *Installation Manual* for cable location). If the clock cable is at fault, replace the clock cable.

---

7. If the fault has cleared and any of these cards are LIMs, place the links assigned to these cards back into service using the *act-slk* command.

   NOTE: See Appendix A for procedures on replacing cards.

0022 - Clock B for card failed, A normal

Description

This indicates that the B clock signal for the indicated card is not present.

Example

```
      RLGHNCXA21W 94-02-07 12:01:43 EST  EAGLE 35.0.0
*     0014.0022  * CARD 1116 OAM   Clock B for card failed, Clock A normal
```

Alarm Level

Minor

Procedure

1. Enter the following command to determine the status of the clock.

rept-stat-clk

The output indicates how many cards are using the specified clock, and how many cards are reporting fault with the specified clock.

Following is an example of the possible output:

```
tekelecstp 00-04-23 13:34:15 EST EAGLE 35.0.0
    CARD LOC= 1114 (Active   )    CARD LOC= 1116 (Isolated )
    PRIMARY BITS   = Active       PRIMARY BITS   = -----
    SECONDARY BITS = Idle         SECONDARY BITS = -----
                                  PST           SST       AST
    SYSTEM CLOCK                  IS-NR         ACTIVE    ALMINH
    # Cards using CLK A = 009     # Cards with bad CLK A = 000
    # Cards using CLK B = 000     # Cards with bad CLK B = 009
    # Cards using CLK I = 000
    Command Completed.
```

CAUTION: Resetting, reseating, or replacing a LIM will cause both links on the card to fail. If the card is a LIM, place the links on the LIM out of service by entering the *dact-slk* command.

2. If only one card is reporting fault, reset the card.

3. If the fault has not cleared, reseat the card.

4. If the fault has not cleared, replace the card.

5. If the fault has not cleared, replace the TDM card in MASP B.

---

6. If more than one card is reporting fault with a clock, check the clock cable connection at the shelf backplane (refer to the *Installation Manual* for cable location). If the clock cable is at fault, replace the clock cable.

---

7. If the fault has cleared and any of these cards are LIMs, place the links assigned to these cards back into service using the *act-slk* command.

   NOTE: See Appendix A for procedures on replacing cards.

0023 - Clocks A and B for card failed

Description

The A and B clock sources for the indicated card are not present.

Example

```
         RLGHNCXA21W 00-02-07 12:01:43 EST  EAGLE 35.0.0
   *     0014.0023  * CARD 1116 OAM   Clocks A and B for card failed
```

Alarm Level

Minor

Procedure

1. Enter the following command to determine the status of the clocks.

rept-stat-clk

The output indicates how many cards are using the specified clocks, and how many cards are reporting fault with the specified clock.

Following is an example of the possible output:

```
tekelecstp 00-04-23 13:34:15 EST EAGLE 35.0.0
    CARD LOC= 1114 (Active   )    CARD LOC= 1116 (Isolated )
    PRIMARY BITS   = Active       PRIMARY BITS   = -----
    SECONDARY BITS = Idle         SECONDARY BITS = -----
                                  PST           SST       AST
    SYSTEM CLOCK                  IS-NR         ACTIVE    ALMINH
    # Cards using CLK A = 009     # Cards with bad CLK A = 000
    # Cards using CLK B = 000     # Cards with bad CLK B = 009
    # Cards using CLK I = 000
    Command Completed.
```

CAUTION: Resetting, reseating, or replacing a LIM will cause both links on the card to fail. If the card is a LIM, place the links on the LIM out of service by entering the *dact-slk* command.

2. If the *rept-stat-clk* command indicates both clocks are healthy, reset the affected card.

3. If the fault has not cleared, reseat the affected card.

4. If the fault has not cleared, replace the affected card.

5. If the BITS clock is not at fault, replace the TDM cards in both MASP A and B.

6. If the fault has cleared and any of these cards are LIMs, place the links assigned to these cards back into service using the following command:

   act-slk:loc=x:port=y

   where **x** is the card location stenciled on the shelf of the system
   and **y** is the port on the card designated in the loc parameter.

7. If the fault has not cleared, call Tekelec Technical Services at the appropriate number.

   Reference: “Customer Care Center” on page 1-13

NOTE: See Appendix A for procedures on replacing cards.

0024 - Clock A for card normal

Description

This message indicates that the clock A distribution for the specified card is now normal.

Example

```
RLGHNCXA21W 00-02-07 12:01:43 EST  EAGLE 35.0.0
0014.0024    CARD 1116 OAM   Clock A for card normal
```

Alarm Level

No alarm condition. The message is informational only.

Procedure

1. This message indicates a previous fault in the clock A distribution has been cleared. No further action is necessary.

0025 - Clock B for card normal

Description

This message indicates that the clock B distribution for the specified card is now normal.

Example

```
RLGHNCXA21W 00-02-07 12:01:43 EST  EAGLE 35.0.0
0014.0025    CARD 1116 OAM   Clock B for card normal
```

Alarm Level

No alarm condition. The message is informational only.

Procedure

1. This message indicates a previous fault in the clock B distribution has been cleared. No further action is necessary.

0026 - Clocks A and B for card normal

Description

This message indicates that clock A and B for the indicated card has returned to a normal state.

Example

```
RLGHNCXA21W 00-02-07 12:01:43 EST  EAGLE 35.0.0
0014.0026    CARD 1116 OAM    Clocks A and B for card normal
```

Alarm Level

No alarm condition. The message is informational only.

Procedure

1. This message indicates a previous fault has been corrected. No further action is necessary.

0033 - Card database has been corrected

Description

This message indicates that the database has been reloaded to the indicated card by system software. This typically occurs when the system software finds the card database is not synchronized with the other cards in the system (incoherent database).

Example

```
RLGHNCXA21W 00-02-07 12:01:43 EST  EAGLE 35.0.0
0014.0033    CARD 1113 OAM      Card database has been corrected
```

Alarm Level

No alarm condition. The message is informational only.

Procedure

1. This message indicates a previous fault has been corrected. No further action is necessary.

0034 - Card database is inconsistent

Description

This message indicates that the database on the indicated card is not at the same level as the source database level. For more information about database management procedures, refer to the *Database Administration Manual.*

Example

```
     RLGHNCXA21W 00-02-07 12:01:43 EST  EAGLE 35.0.0
*    0014.0034  * CARD 1201 LIMDS0    Card database is inconsistent
```

Alarm Level

Minor

Procedure for a non-MASP card

CAUTION: Resetting, reseating, or replacing a LIM will cause both links on the card to fail. If the card is a LIM, place the links on the LIM out of service by entering the *dact-slk* command.

1. Wait five minutes to see if the card corrects itself.

2. Enter the following command to check the database level on the card:

rept-stat-db:display=all

3. If the problem persists, enter the following command to retrieve the terminal types and port numbers:

rtrv-trm

4. If the card is a LIM, enter the following command to deactivate the slk:

dact-slk:loc=xxxx:port=y
where *xxxx* = the card location
y = the port on the card specified in the location parameter.

5. Enter the following command to inhibit each OAP terminal displayed in the output from Step 3:

inh-trm:trm=x

where x = the port number.
NOTE: The force parameter is required for the last OAP terminal inhibited.

---

6. Enter the following command to change the state of the card to OOS-MT-DSBLD:

init-card:loc=xxxx

where **x** is the card location stenciled on the shelf of the system.

---

7. Enter the following command to change the state of the card to IS-NR:

alw-card:loc=xxxx

where x = the card location stenciled on the shelf of the system.

---

8. If the card is a LIM, enter the following command to activate the slk:

act-slk:loc=xxxx:port=y
where *xxxx* = the card location
y = the port on the card specified in the location parameter.

---

9. After the card has been reloaded (a message appears to confirm completion of the load), enter the following command to verify the database is consistent (same level as the other cards in the system).

rept-stat-card

---

10. Check the consistency of the card by entering the following command:

rept-stat-db:display=except

---

11. Enter the following command to return the OAP terminals to the in-service state:

alw-trm:trm=x

where x = the port number.

---

12. If the problem persists, call Tekelec Technical Services at the appropriate number.

Reference: “Customer Care Center” on page 1-13

Procedure for a MASP card

1. Enter the following command to retrieve the terminal types and port numbers:

   rtrv-trm

2. Enter the following command to inhibit each OAP terminal displayed in the output from Step 1:

   inh-trm:trm=x

   where x = the port number.
   NOTE: The force parameter is required for the last OAP terminal inhibited.

3. Enter the following command to check the database level on all cards:

   rept-stat-db:display=all

   Pay special attention to note the database levels on both the active and standby current partitions and the levels represented on all the network cards. It is important that the database level of the network cards matches the database level of the active MASP.
   NOTE: If the database on the OAM is repaired and ends up at a lower level than the network cards, the system must be initialized.

4. If neither database is at the same level as the network cards, contact Technical Services at the appropriate number.

   Reference: “Customer Care Center” on page 1-13.

5. If the message indicates the active fixed disk is inconsistent, continue with Step 6. If the message indicates the standby fixed disk is inconsistent, continue with Step 9. If the message indicates that both fixed disks are inconsistent, continue with Step 14.

6. Enter the following command on the active GPSM-II card to force it to become standby:

   init-card:loc=xxxx

   where x = the card location stenciled on the shelf of the system.

7. Enter the following command to log back into the system:

   login:uid=xxxx

   where *xxxx* = User ID.

8. Enter the following command to check the database level on all cards:

rept-stat-db:display=all

Pay special attention to note the database levels on both the active and standby current partitions and the levels represented on all the network cards. It is important that the database level of the network cards matches the database level of the active MASP.
NOTE: If the database on the OAM is repaired and ends up at a lower level than the network cards, the system must be initialized.

---

9. Enter the following command to copy the current and backup database partitions on the active fixed disk, to the current and backup database partitions on the standby fixed disk

chg-db:action=repair

After the command is executed, the standby GPSM-II card reboots, the old database data is purged from memory, and the new database is loaded.

---

10. After the card has been reloaded (a message appears to confirm completion of the load), enter the following command to verify the database is consistent (same level as the other cards in the system):

rept-stat-db:display=all

If standby and current active databases are consistent, continue with Step 11 through Step 12. If the current active or standby database is inconsistent, continue with Step 13 and Step 14.

---

11. Enter the following command to return the OAP terminals to the in-service state:

alw-trm:trm=x

where *x* = the port number of the terminals of type OAP from Step 1.

---

12. For more information on database management, refer to the *Database Administration Manual - System Management*.

STOP! YOU HAVE COMPLETED THIS PROCEDURE.

---

13. Enter the following command for the inconsistent fixed disk:

tst-disk:loc=xxxx
where *xxxx* = location of the inconsistent fixed disk.

When the command completes, continue with Step 14.

---

14. Call Tekelec Technical Services at the appropriate number.

Reference: “Customer Care Center” on page 1-13.

0035 - Card database is corrupted

Description

This message indicates that the card database has been modified by some unknown process and is not usable. For more information about database management procedures, refer to the *Database Administration Manual.*

Example

```
     RLGHNCXA21W 00-02-07 12:01:43 EST  EAGLE 35.0.0
*    0014.0035  * CARD 1113 OAM       Card database is corrupted
```

Alarm Level

Minor

Procedure for a non-MASP card

CAUTION: Resetting, reseating, or replacing a LIM will cause both links on the card to fail. If the card is a LIM, place the links on the LIM out of service by entering the *dact-slk* command.

1. Wait five minutes to see if the card corrects itself.

2. If the problem persists, enter the following command to retrieve the terminal types and port numbers:

rtrv-trm

3. Enter the following command to inhibit each OAP terminal displayed in the output from Step 2:

inh-trm:trm=x

where x is the port number.
NOTE: The force parameter is required for the last OAP terminal inhibited.

4. Enter the following command to reinitialize the indicated card and force the card to load the current level of database.

init-card:loc=x

where **x** is the card location stenciled on the shelf of the system.

Procedure for a MASP card

1. Enter the following command to retrieve the terminal types and port numbers:

   rtrv-trm

2. Enter the following command to inhibit each OAP terminal displayed in the output from Step 1:

   inh-trm:trm=x

   where x is the port number.
   NOTE: The force parameter is required for the last OAP terminal inhibited.

3. Enter the following command for each OAP terminal inhibited in Step 2:

   chg-trm:trm=x:type=none

   where x is the port number.

4. If the message indicates the standby fixed disk is corrupted, continue with Step 6. If the message indicates the active fixed disk is corrupted, continue with Step 5.

5. Enter the following command on the active GPSM-II card to force it to become standby:

   init-card:loc=x

   where **x** is the card location stenciled on the shelf of the system.
   Continue with Step 6.

6. Enter the following command to copy the current and backup database partitions on the active fixed disk, to the current and backup database partitions on the standby fixed disk

   chg-db:action=repair

   After the command is executed, the standby GPSM-II card reboots, the old database data is purged from memory, and the new database is loaded.

7. After the card has been reloaded (a message appears to confirm completion of the load), enter the following command to verify the database is consistent (same level as the other cards in the system).

   rept-stat-card

8. Enter the following command for each OAP terminal inhibited in Step 2:

chg-trm:trm=x:type=oap

where x is the port number.

---

9. Enter the following command to return the OAP terminals to the in-service state:

alw-trm:trm=x

where x is the port number.

---

10. If the problem persists, call Tekelec Technical Services at the appropriate number.

Reference: “Customer Care Center” on page 1-13

0036 - Card backup database has been corrected

Description

This message indicates that the backup database version level and content on the standby MASP is synchronized with the reference database.

Example

```
RLGHNCXA21W 00-02-07 12:01:43 EST  EAGLE 35.0.0
0014.0036    CARD 1113 OAM       Card backup database has been corrected
```

Alarm Level

No alarm condition. The message is informational only.

Procedure

1. This message indicates a previous fault has been corrected. No further action is necessary.

0037 - Card backup database is inconsistent

Description

This message indicates that the backup database version level and/or content on the MASP is not synchronized with the database on the active MASP. This typically occurs if a different level counter, last update day/time-stamp, or contents is detected, or the database is incoherent.

Example

```
   RLGHNCXA21W 00-02-07 12:01:43 EST  EAGLE 35.0.0
*  0014.0037  * CARD 1113 OAM     Card backup database is inconsistent
```

Alarm Level

Minor

Procedure

1. Enter the following command to confirm both active and standby current databases contain correct and identical information (coherent and consistent):

rept-stat-db

The following is an example of the output from a coherent database.

```
> rept-stat-db

Command Accepted - Processing

oflnmoxa11w 00-10-08 15:56:40 CDT EAGLE 35.0.0
rept-stat-db
Command entered at terminal #4.
;

oflnmoxa11w 00-10-08 15:56:40 CDT EAGLE 35.0.0
DATABASE STATUS: >> OK <<
     TDM 1114 ( STDBY)                TDM 1116 ( ACTV )
        C   LEVEL    TIME LAST BACKUP     C   LEVEL    TIME LAST BACKUP
        - -------- ---------------------  - -------- ---------------------
FD BKUP  Y   342256 00-10-07 00:40:29 CDT  Y   342256 00-10-07 00:40:29 CDT
FD CRNT  N   342374                       Y   342375
     MDAL 1117
     - --------
```

2. Enter the following command to perform a backup (to fixed disk) of both active and standby databases:

chg-db:action=backup:dest=fixed

0038 - Card backup database is corrupted

Description

This message indicates that the backup database has been modified by some unknown process and is no longer usable.

Example

```
      RLGHNCXA21W 00-02-07 12:01:43 EST  EAGLE 35.0.0
 *    0014.0038  * CARD 1113 OAM       Card backup database is corrupted
```

Alarm Level

Minor

Procedure

1. Enter the following command to confirm that both active and standby current databases contain correct and identical information (coherent and consistent):

rept-stat-db

The following is an example of the output from a coherent database.

```
> rept-stat-db

Command Accepted - Processing

oflnmoxa11w 00-10-08 15:56:40 CDT EAGLE 35.0.0
rept-stat-db
Command entered at terminal #4.
;

oflnmoxa11w 00-10-08 15:56:40 CDT EAGLE 35.0.0
DATABASE STATUS: >> OK <<
        TDM 1114 ( STDBY)                TDM 1116 ( ACTV )
         C   LEVEL    TIME LAST BACKUP     C   LEVEL    TIME LAST BACKUP
         - -------- ---------------------  - -------- ---------------------
FD BKUP  Y   342256 00-10-07 00:40:29 CDT  Y   342256 00-10-07 00:40:29 CDT
FD CRNT  N   342374                        Y   342375
        MDAL 1117
         - --------
```

2. Enter the following command to perform a backup (to fixed disk) of both active and standby databases:

chg-db:action=backup:dest=fixed

0039 - GPL has been corrected

Description

All copies of the generic program load are satisfactory.

Example

```
RLGHNCXA21W 00-02-07 11:02:30 EST  EAGLE 35.0.0
0100.0039    GPL SYSTEM OAM      GPL has been corrected
```

Alarm Level

No alarm condition. The message is informational only.

Procedure

1. This message indicates a previous fault has been corrected. No further action is necessary.

0040 - GPL is corrupted

Description

This message indicates that a generic program load (GPL) has become corrupted. This typically occurs when the system software detects that a generic program load has been unexpectedly modified.

Example

```
          RLGHNCXA21W 00-02-07 11:02:30 EST  EAGLE 35.0.0
*     0100.0040  * GPL SYSTEM OAM      GPL is corrupted
```

Alarm Level

Minor

Procedure

1. Enter the following command to determine the status of the system generic program loads:

rtrv-gpl

This command indicates the generic program loads that have become corrupted.

2. Enter the *chg-gpl* command to reload the generic program load from a system removable cartridge. If the approved GPL is corrupted, insure that the trial GPL is the correct one using *rtrv-gpl* and activate it using the *act-gpl* command.

0041 -LSMS bulk load required

Description

This message indicates that the entire system LNP database must be repopulated, either from the LSMS or a backup disk. This process must be started manually.

Example

```
     RLGHNCXA21W 00-02-07 11:02:30 EST  EAGLE 35.0.0
*C   0009.0041 *C LSMS SYSTEM      LSMS bulk load required
```

Alarm Level

Critical

Procedure

1. Refer to the *LNP Database Synchronization Manual*, for the LSMS Bulk Load procedure.

0042 - LSMS bulk load complete

Description

This message indicates that the alarm condition is removed, the association is reestablished, the LSMS is downloading transactions, and the automatic resynchronization is in progress.

Example

```
RLGHNCXA21W 00-02-07 11:02:30 EST  EAGLE 35.0.0
0100.0042  LSMS SYSTEM        LSMS bulk load complete
```

Alarm Level

No alarm condition. The message is informational only.

Procedure

1. This message indicates a previous fault has been corrected. No further action is necessary.

0043 - Incorrect feature configuration

Description

The HC MIM card is inserted into a slot that is provisioned for configurations not supported. The HC MIM card is also auto-inhibited by the OAM.

Example

```
    station1234 00-11-30 16:28:08 EST  EAGLE 35.0.0
**  0012.0043  **  CARD 1201  LIMT1  Incorrect feature configuration
                   HW VERIFICATION CODE: xxx
```

Alarm Level

Major

Procedure

1. Review hardware feature requirements and correct the configuration as necessary.The following configuration errors will cause the HC MIM card to auto-inhibit:

- The HC MIM will not support CAS on any E1 ports. Thus, any ports that are provisioned in this configuration will need to be changed else.
- Due to temperature requirements of the HC Blade, the HC MIM must operate within a shelf that contains a fan tray.

NOTE: See Appendix A, *Card Removal/Replacement Procedures* for details about replacing cards.

0044 - Real time clock battery low

Description

The battery power in the HC MIM card is low.

Example

```
    station1234 00-11-30 16:28:08 EST  EAGLE 35.0.0
 *  0012.0044  *  CARD 1201  LIMT1  Real time clock battery low
```

Alarm Level

Minor

Procedure

1. Replace the HC MIM card with a spare and call Tekelec for a RMA to send the card back to Tekelec for replacement.

   NOTE: See Appendix A for details about replacing cards.

0045 - Real time clock battery restored

Description

The HC MIM card has been replaced and the battery power in the HC MIM card is normal.

Example

```
station1234 00-11-30 16:28:08 EST  EAGLE 35.0.0
0012.0045    CARD 1201  LIMT1  Real time clock battery restored
```

Alarm Level

No alarm condition. The message is informational only.

Procedure

1. This message indicates a previous fault has been corrected. No further action is necessary.

0046 - Terminal enabled

Description

The indicated terminal has been returned to service and can handle normal user input and output.

Example

```
RLGHNCXA21W 00-02-07 12:01:43 EST  EAGLE 35.0.0
0014.0046    TERMINAL   15       Terminal enabled
```

Alarm Level

No alarm condition. The message is informational only.

Procedure

1. This message indicates a previous fault has been corrected. No further action is necessary.

0047 - Card type not valid for application

Description

This message indicates that a TSM card was replaced by an ASM card. The ASM card is automatically inhibited because it is no longer supported.

Example

```
    station1234 00-11-30 16:28:08 EST  EAGLE 35.0.0
**  0012.0047  **  CARD 1109 Card type not valid for application
                    HW VERIFICATION CODE: xxx
```

Alarm Level

Major

Procedure

1. Replace the ASM card with the correct version of the TSM card.

   NOTE: See Appendix A, *Card Removal/Replacement Procedures* for details about replacing cards.

0048 - Terminal failed

Description

The MASP has detected that the terminal is faulty. The maintenance software has removed the terminal from service.

Example

```
           RLGHNCXA21W 00-02-07 12:01:43 EST  EAGLE35.0.0
     *     0014.0048  * TERMINAL   15       Terminal failed
```

Alarm Level

Minor

Procedure

1. Verify that the power to the terminal is on and that the terminal is physically connected to the control shelf backplane. If the fault does not clear, disconnect the terminal from the control shelf backplane and connect another terminal (with the same communication attributes as the old terminal) to the same port on the control shelf backplane.

2. Enter the following command to verify the communication attributes of the terminal port:

rtrv-trm

3. If the communication attributes need to be changed, refer to the *Commands Manual* and enter the following command with the appropriate parameters to make the required changes to the communication attributes:

chg-trm

4. Terminals are connected to ports on the TDM card. Enter the following command to determine which ports are idle:

rept-stat-user

5. Move the terminal to another port on the TDM card or on the backplane. If the fault does not clear, replace the TDM card.

NOTE: See Appendix A for procedures on replacing cards.

0051 - TSC sync is in simplex mode

Description

Due to one or both GPSM-II cards being replaced with MCAPs after the feature bit has been set, the hardware configuration no longer supports the TSC Synchronization feature.

Example

```
     RLGHNCXA21W 00-02-07 11:02:30 EST  EAGLE 35.0.0
 **  0100.0051  ** CARD 1113  OAM    TSC sync is in simplex mode
```

Alarm Level

Major

Procedure

1. Replace the MCAP(s) with GPSM-II card(s).

NOTE: See Appendix A for details about replacing cards.

0052 - TSC sync feature is available

Description

This indicates that the GPSM-II card(s) is now seated in the appropriate slot and is functioning correctly.

Example

```
RLGHNCXA21W 00-02-07 11:02:30 EST  EAGLE 35.0.0
0100.0052     CARD 1113  OAM   TSC sync feature is available
```

Alarm Level

No alarm condition. The message is informational only.

Procedure

1. This message indicates a previous fault has been corrected. No further action is necessary.

0053 - Standby TDM failure

Description

This message indicates that the communication between the GPSM-II and TDM has failed.

Example

```
    station1234 94-03-30 16:28:08 EST EAGLE 35.0.0
**   0012.0053 **  CARD 1113 OAM         Standby TDM failure
```

Alarm Level

Major

Procedure

1. Enter the following command to verify card status:

   rept-stat-card

2. Enter the following command to verify the database status:

   rept-stat-db

3. Replace the failed TDM, that is in IS-ANR state with the backup TDM.

   NOTE: Replace the card during the maintenance window, if possible. See Appendix A for procedures on replacing cards.

0054 - Standby TDM failure cleared

Description

This message indicates that the communication between the GPSM-II and TDM has been reestablished.

Example

```
station1234 94-03-30 16:28:08 EST EAGLE 35.0.0
0012.0054    CARD 1113 OAM         Standby TDM failure cleared
```

Alarm Level

No alarm condition. The message is informational only.

Procedure

1. This message indicates a previous fault has been corrected. No further action is necessary.

0055 - Persistent device state tbl corrupt

Description

This message indicates that after attempting an automatic recovery from a first checksum error, a Persistent Device States (PDS) checksum error still exists in the standby System Configuration Manager (SCM). PDS features are disabled.

Example

```
      RLGHNCXA21W 00-02-07 12:01:43 EST  EAGLE 35.0.0
*     0014.0055  * CARD 1115 OAM    Persistent device state tbl corrupt
```

Alarm Level

Minor

Procedure

1. Enter the following command to verify the status of the database:

   rept-stat-db

2. Enter the following command to update the PDS table. This command reinitializes the card and forces the card to load the current level of the database:

   init-card:loc=xxxx
   xxxx is the location of the card identified in output.

3. Enter the following command to verify the that the database is the same level as the active OAM:

   rept-stat-db

4. If the problem persists, contact Tekelec Technical Services at the appropriate number.

   Reference: “Customer Care Center” on page 1-13.

0056 - Persistent device state tbl diff version

Description

This message indicates that the PDS table version in the standby SCM does not match the PDS table version in the active SCM. PDS features are disabled.

Example

```
    RLGHNCXA21W 00-02-07 12:01:43 EST  EAGLE 35.0.0
 *  0014.0056  * CARD 1115 OAM    Persistent device state tbl diff version
```

Alarm Level

Minor

Procedure

1. Enter the following command to verify the status of the database:

rept-stat-db

2. Enter the following command to update the PDS table. This command reinitializes the card and forces the card to load the current level of the database:

init-card:loc=xxxx
xxxx is the location of the card identified in output.

3. Enter the following command to verify the that the database is the same level as the active OAM:

rept-stat-db

4. If the problem persists, contact Tekelec Technical Services at the appropriate number.

Reference: “Customer Care Center” on page 1-13.

0057 - Persistent device state tbl corrected

Description

This indicates that the This message indicates that a problem PDS table has been corrected.

Example

```
RLGHNCXA21W 00-02-07 11:02:30 EST  EAGLE 35.0.0
0100.0057     CARD 1115  OAM   Persistent device state tbl corrected
```

Alarm Level

No alarm condition. The message is informational only.

Procedure

1. This message indicates a previous fault has been corrected. No further action is necessary.

0058 - Critical customer trouble detected

Description

A critical customer trouble has been detected. There are connections on the control shelf backplane for customer detected troubles (CDTs). Each connection is assigned an identifier 1-16. CDT connections 2-4 are applicable to UAM 0058. CDT connections 6-8 are applicable to UAM 0059. CDT connections 10-16 are applicable to UAM 0060. The customer determines the connections on the backplane (these are dry contact closures). The system reports the alarm according to the connection location.

Example

```
    RLGHNCXA21W 96:07:02 11:02:30   EST  EAGLE 35.0.0
 *C 0100.0058   *C  CDT 4          Critical customer trouble detected
```

Alarm Level

Critical

Procedure

1. Follow local procedures for clearing the indicated trouble.

0059 - Major customer trouble detected

Description

A major customer trouble has been detected. There are connections on the control shelf backplane for customer detected troubles (CDTs). Each connection is assigned an identifier 1-16. CDT connections 2-4 are applicable to UAM 0058. CDT connections 6-8 are applicable to UAM 0059. CDT connections 10-16 are applicable to UAM 0060. The customer determines the connections on the backplane (these are dry contact closures). The system reports the alarm according to the connection location.

Example

```
     RLGHNCXA21W    96:07:02 11:02:30 EST  EAGLE 35.0.0
 **  0100.0059       ** CDT 8        Major customer trouble detected
```

Alarm Level

Major

Procedure

1. Follow local procedures for clearing the indicated trouble.

0060 - Minor customer trouble detected

Description

A minor customer trouble has been detected. There are connections on the control shelf backplane for customer detected troubles (CDTs). Each connection is assigned an identifier 1-16. CDT connections 2-4 are applicable to UAM 0058. CDT connections 6-8 are applicable to UAM 0059. CDT connections 10-16 are applicable to UAM 0060. The customer determines the connections on the backplane (these are dry contact closures). The system reports the alarm according to the connection location.

Example

```
      RLGHNCXA21W 96:07:02 11:02:30   EST  EAGLE 35.0.0
 *    0100.0060    * CDT 16          Minor customer trouble detected
```

Alarm Level

Minor

Procedure

1. Follow local procedures for clearing the indicated trouble.

0061 - Customer trouble detected

Description

A customer trouble has been detected.

Example

```
RLGHNCXA21W 96:07:02 11:02:30  EST      EAGLE 35.0.0
0100.0061       CDT 11       Customer trouble detected
```

Alarm Level

No alarm condition. The message is informational.

Procedure

1. This message indicates that a customer-defined trouble is detected. Follow local procedures to clear the trouble.

0062 - Customer trouble cleared

Description

A customer trouble has been cleared.

Example

```
RLGHNCXA21W 96:07:02 11:02:30  EST    EAGLE 35.0.0
0100.0062       CDT 11       Customer trouble cleared
```

Alarm Level

No alarm condition. The message is informational.

Procedure

1. This message indicates that a customer-defined trouble is cleared. No action is necessary.

0063 - Critical holdover clock trbl detected

Description

A critical trouble has been detected with the holdover clock. This could include a problem with the reference input and stratum clock cards.

Example

```
     RLGHNCXA21W  96:07:02 11:02:30  EST  EAGLE 35.0.0
 *C  0100.0063    *C CLOCK    Critical holdover clock trbl detected
```

Alarm Level

Critical

Procedure

1. Check for any visual alarms. Note any visual alarms and refer toAppendix E to perform the corrective action procedures.

0064 - Major holdover clock trouble detected

Description

A major trouble has been detected with the holdover clock. This could include a problem with the reference input and/or stratum clock cards.

Example

```
     RLGHNCXA21W 96:07:02 11:02:30     EST   EAGLE 35.0.0
**   0100.0064    ** CLOCK   Major holdover clock trouble detected
```

Alarm Level

Major

Procedure

1. Check for any visual alarms. Note any visual alarms and refer to Appendix E to perform the corrective action procedures.

0065 - Minor holdover clock trouble detected

Description

A minor trouble has been detected with the holdover clock. This could include a problem with the reference input and/or stratum clock cards.

Example

```
    RLGHNCXA21W  96:07:02 11:02:30  EST   EAGLE 35.0.0
 *  0100.0065     *  CLOCK          Minor holdover clock trouble detected
```

Alarm Level

Minor

Procedure

1. Check for any visual alarms. Note any visual alarms and refer to Appendix Appendix E to perform the corrective action procedures.

0066 - Holdover clock trouble cleared

Description

A problem with the holdover clock has been corrected.

Example

```
RLGHNCXA21W  96:07:02 11:02:30  EST   EAGLE 35.0.0
0100.0066         CLOCK         Holdover clock trouble cleared
```

Alarm Level

No alarm condition. The message is informational.

Procedure

1. This message indicates that a problem with the holdover clock has been cleared.

0077 - Card temperature is critical lvl:T2

Description

The HC MIM card has reached an operating temperature that is above the operational limit.

Example

```
    RLGHNCXA21W 00-02-07 11:02:30 EST  EAGLE 35.0.0
*C 0100.0077  *C CARD 1102  LIMT1 Card temperature is critical lvl:T2
```

Alarm Level

Critical

Procedure

WARNING: There is a very limited time to solve this problem. Once the card exceeds its operation limit, all the links on the HC MIM card will be blocked (ACT-LPO), causing the links to go into local processor outage. All traffic on the links blocked is re-directed elsewhere in the system (based on the current route provisioning).

1. Verify that the fan assembly located in that shelf is working properly.

- Check the fan controller card and verify that all LEDs are green.
- Replace any hardware in the fan assembly that is not functioning properly.

NOTE: See HC MIM Fan Procedures in Appendix A for replacement procedures.

2. If the fan unit is working properly, employ additional cooling methods to the card reporting a high-operating temperature.

3. This Critical Temperature Alarm will remain in the system until the operational temperature of the HC MIM card (HC Blade) goes below the critical temperature threshold.

4. If this does not clear the fault, call the Customer Care Center. See “Customer Care Center” on page 1-13.

The hierarchy of maintenance activity is based on Table 3-17.

Table 3-17. Maintenance Activity Hierarchy

Condition	Cntrl. LED	FAN 1 LED	FAN 2 LED	FAN 3 LED	Alarm Status	Actions
Normal Operation	Green	Green	Green	Green	No Alarm**	None
A power feed fail	Blink	RED			Alarm*	Check the fuse, the power source, and cables
Interconnect card OR circuit fail	Blink		RED		Alarm*	Check the fuse, the power source, and cables
B power feed fail	Blink			RED	Alarm*	Check the fuse, the power source, and cables
Fan 1 fail	Green	RED			Alarm*	**1.** Make sure that there is A power **2.** Make sure that there is B power and that Fan 2 and Fan 3 are operating properly. **3.** Replace the fan.
Fan 2 fail	Green		RED		Alarm*	**1.** Make sure that there is both A and B power **2.** Make sure that Fan 1 and Fan 3 are operating properly **3.** Replace the fan
Fan 3 fail	Green			RED	Alarm*	**1.** Make sure that there is B power **2.** Make sure that there is A power and that Fan 1 and Fan 2 are operating properly **3.** Replace the fan

Table 3-17. Maintenance Activity Hierarchy (Continued)

Condition	Cntrl. LED	FAN 1 LED	FAN 2 LED	FAN 3 LED	Alarm Status	Actions
Fan 1 Removed	Green	Blink			Alarm*	**1.** Make sure that the fan is seated properly **2.** Replace the fan
Fan 2 Removed	Green		Blink		Alarm*	**1.** Make sure that the fan is seated properly **2.** Replace the fan
Fan 3 Removed	Green			Blink	Alarm*	**1.** Make sure that the fan is seated properly **2.** Replace the fan
Controller card partial fail	RED				Alarm*	**1.** Make sure there is both A and B power. **2.** Make sure the fans are working properly **3.** Remove Fan 1 **4.** Replace the Fan Tray Controller
Controller card fail	OFF	OFF	OFF	OFF	Alarm*	**1.** Make sure there is both A and B power. **2.** Make sure the fans are working properly **3.** Remove Fan 1. **4.** Replace the Fan Tray Controller
Interconnect Failure - replace shelf						

*If there is no alarm for this condition, it is likely that the relay on the Interconnect card has failed (opened)

**If there is an alarm when all 4 LEDs are green, it is likely that the relay on the Interconnect card has failed (closed)

[Try replacing the controller before replacing the fan tray]

Maintenance Order

1. Check to make sure there is both A and B power.

2. Check the fans

3. Check the controller card for proper operation (as a minimum B power must be present and good fans for fan 2 and fan 3 must be installed before removing the controller)

4. Replace the fan tray only after checking power, fans, and control card

If the condition in number 4 above occurs call the Customer Care Center for assistance.

0078 - Card temperature exceeds nominal lvl:T1

Description

The HC MIM card has reached an operating temperature that is above the pre-defined limit.

Example

```
   RLGHNCXA21W 00-02-07 11:02:30 EST  EAGLE 35.0.0
** 0100.0078  ** CARD 1102  LIMT1 Card temperature exceeds nominal lvl:T1
```

Alarm Level

Major

Procedure

1. Enter the following command to verify the temperature threshold defaults are 75 degrees Celsius and 82 degrees Celsius:

   `rtrv-th-alm`

   If it is not, go to Step 2. If it is, go to Step 3.

2. The threshold can be reset by entering the following command:

   `chg-th-alm:thermallv1c=xxxx`

   where: xxxx=temperature

3. Verify that the fan assembly located in that shelf is working properly.

   - Check the fan controller card and verify that all LEDs are green.
   - Replace any hardware in the fan assembly that is not functioning properly.

   NOTE: See HC MIM Fan Replacement Procedures in Appendix A.

4. If the fan unit is working properly, employ additional cooling methods to the card that is reporting a high-operating temperature.

5. If the running temperature of the HC MIM exceeds its operational limit, UAM # 0077 is generated, and the links go into Local Processor Outage (LPO).

6. This Temperature Alarm will remain in the system until the operational temperature of the HC MIM (HC Blade) returns to normal levels.

WARNING: There is a very limited time to solve this problem. If the card temperature continues to rise it will exceed its operational limit, at which point all the links on the HC MIM card will be blocked (ACT-LPO), causing the links to go into local processor outage. All traffic on the links blocked is re-directed elsewhere in the system (based on the current route provisioning).

7. If this procedure does not clear the fault, call the Customer Care Center at the appropriate number.

   Reference: “Customer Care Center” on page 1-13

8. If the threshold was changed in Step 2, enter the following command to reset the threshold to the original setting:

   `chg-th-alm:thermallv1c=xxxx`

   where: xxxx=temperature

The hierarchy of maintenance activity is based on Table 3-18.

Table 3-18. Maintenance Activity Hierarchy

Condition	Cntrl. LED	FAN 1 LED	FAN 2 LED	FAN 3 LED	Alarm Status	Actions
Normal Operation	Green	Green	Green	Green	No Alarm**	None
A power feed fail	Blink	RED			Alarm*	Check the fuse, the power source, and cables
Interconnect card OR circuit fail	Blink		RED		Alarm*	Check the fuse, the power source, and cables
B power feed fail	Blink			RED	Alarm*	Check the fuse, the power source, and cables
Fan 1 fail	Green	RED			Alarm*	**1.** Make sure that there is A power **2.** Make sure that there is B power and that Fan 2 and Fan 3 are operating properly. **3.** Replace the fan.

Table 3-18. Maintenance Activity Hierarchy (Continued)

Condition	Cntrl. LED	FAN 1 LED	FAN 2 LED	FAN 3 LED	Alarm Status	Actions
Fan 2 fail	Green		RED		Alarm*	**1.** Make sure that there is both A and B power **2.** Make sure that Fan 1 and Fan 3 are operating properly **3.** Replace the fan
Fan 3 fail	Green			RED	Alarm*	**1.** Make sure that there is B power **2.** Make sure that there is A power and that Fan 1 and Fan 2 are operating properly **3.** Replace the fan
Fan 1 Removed	Green	Blink			Alarm*	**1.** Make sure that the fan is seated properly **2.** Replace the fan
Fan 2 Removed	Green		Blink		Alarm*	**1.** Make sure that the fan is seated properly **2.** Replace the fan
Fan 3 Removed	Green			Blink	Alarm*	**1.** Make sure that the fan is seated properly **2.** Replace the fan
Controller card partial fail	RED				Alarm*	**1.** Make sure there is both A and B power. **2.** Make sure the fans are working properly **3.** Remove fan 1 **4.** Replace the Fan Tray Controller

Table 3-18. Maintenance Activity Hierarchy (Continued)

Condition	Cntrl. LED	FAN 1 LED	FAN 2 LED	FAN 3 LED	Alarm Status	Actions
Controller card fail	OFF	OFF	OFF	OFF	Alarm*	**1.** Make sure there is both A and B power. **2.** Make sure the fans are working properly **3.** Remove fan 1. **4.** Replace the Fan Tray Controller
Interconnect Failure - replace shelf						

*If there is no alarm for this condition it is likely that the relay on the Interconnect card has failed (open)

**If there is an alarm when all 4 LEDs are green it is likely that the relay on the Interconnect card has failed (closed)

[Try replacing the controller before replacing the fan tray]

Maintenance Order

1. Check to make sure there is both A and B power.

2. Check the fans

3. Check the controller card for proper operation (as a minimum B power must be present and good fans for fan 2 and fan 3 must be installed before removing the controller)

4. Replace the fan tray only after checking power, fans, and control card

If the condition in number 4 above occurs call the Customer Care Center for assistance.

0079 - Card temperature again at nominal levels

Description

The operational temperature of the HC MIM (HC Blade) has returned to normal levels.

Example

```
RLGHNCXA21W 00-02-07 11:02:30 EST  EAGLE 35.0.0
0100.0079  CARD  1102 LIMT1 Card temperature again at nominal levels
```

Alarm Level

No alarm condition. The message is informational only.

Procedure

1. This message indicates a previous fault has been corrected. No further action is necessary.

0082 - Alarm in Fuse panel

Description

A blown fuse has been detected in the fuse panel located on top of the designated frame.

Example

```
     RLGHNCXA21W 00-02-07 11:02:30 EST  EAGLE 35.0.0
**   0100.0082  ** FUSE PANEL  11xx    Alarm in Fuse panel
```

Alarm Level

Major

Procedure

1. Locate the fuse and alarm panel (FAP) indicated in the alarm message.

2. Look at the set of fuses and find the fuse with the “flag” standing out. This indicates the fuse is blown. Replace the fuse with a GMT 3 amp or 1 amp (depending on the type being replaced). See the *Installation Manual* for the correct fuse type.

CAUTION: Arbitrarily removing a good fuse will cause all cards serviced by the removed fuse to fail. Verify the fuse output before pulling a fuse that appears to be good.

3. If no fuses appear to be blown, use a VOM and measure the voltage outputs on the rear of the panel (refer to the *Installation Manual* for voltage test points).

4. If the fuse blows again, visually inspect the shelf backplanes for shorts or metallic debris.

5. If nothing can be found visually, put all cards serviced by the affected fuse out of service with the following command:

   rmv-card:loc=x

   where **x** is the card location stenciled on the shelf of the system.

6. Unplug the cards serviced by the affected fuse.

7. Replace the fuse.

---

8. Plug in each card one at a time. As each card is plugged in, verify the fuse does not blow. When the fuse does blow, replace the card just plugged in.

---

9. Replace the fuse again.

---

10. Continue plugging in the remaining cards, verifying the fuse does not blow with each card. Each time the fuse does blow, replace the card and continue.

There may be more than one card at fault. If you encounter a card which blows the fuse, do not stop the procedure. Continue until all cards have been plugged in.

---

11. If all the cards are plugged in and the fault has cleared, place the affected cards back into service by entering the following command:

rst-card:loc=x

where **x** is the card location stenciled on the shelf of the system.

---

12. If this does not clear the fault, call Tekelec Technical Services at the appropriate number.

Reference: “Customer Care Center” on page 1-13

NOTE: See Appendix A for procedures on replacing cards.

0083 - Fuse Panel alarm has cleared

Description

This indicates that the fuse alarm has been cleared.

Example

```
RLGHNCXA21W 00-02-07 11:02:30 EST  EAGLE 35.0.0
0100.0083    FUSE PANEL  11xx    Fuse Panel alarm has cleared
```

Alarm Level

No alarm condition. The message is informational only.

Procedure

1. This message indicates a previous fault has been corrected. No further action is necessary.

0084 - IP Connection Unavailable

Description

IP[7] system: This message indicates that an IP application socket is out of service due to a IP link down (Ethernet problem) or due to the DSM card.

EAGLE 5 ISS: This indicates that an IP link is down. The link may be either the external MCP (Measurements Collection and Polling) external customer link or a DSM (Database Services Module) to MPS link.

Example

```
     RLGHNCXA03W 99-04-10 16:28:08 EST EAGLE 35.0.0
**   0046.0084  ** DLK 1217,B IP   IP Connection Unavailable
```

Alarm Level

Major

Procedure for IP[7]

1. Run System Health Check.

Reference: “System Health Check Procedure”.

If you cannot login, continue with Step 4.

2. Check the remote device and network connection. In order to do this, the card location must be determined from the UAM message:

- Using the *rtrv-ip-host* command with the local host name (*host*), the IP address is displayed.
- Using the *rtrv-ip-lnk* command with no parameters provides output that can be searched.
- Search in the output for the IP address which then has an associated card location (loc) displayed. Use this card location in the steps below.

Using the remote hostname, use the *pass:loc=xxxx:cmd=”ping hostname”* command to test the TCP/IP connection. *xxxx* is the card location of the DSM card indicated above. If the *ping* command fails, perform the following checks:

- Check the remote host hardware and software.
- Use your company procedures to check the network.
- Check cable connections at the DSM card and at the remote host.

3. If the DSM card is OOS-MT, do the following, using the *rept-stat-card* command to check card for IS-NR state after each action:

   a. Reinitialize card using the *init-card* command

   b. Reseat the MDAL card.

   c. Replace the DSM card.

   NOTE: See Appendix A for procedures on replacing cards.

4. If the alarm is not cleared, call Tekelec Technical Services at the appropriate number.

   Reference: “Customer Care Center” on page 1-13.

Procedure for EAGLE 5 ISS

For a failure with the external OAP link (as indicated in the alarm message by location *OAP A* or *OAP B*), use the following procedure:

1. Check the physical connection for the Ethernet cable connected to port E0. Reconnect as necessary.

2. Check the connection(s) for this Ethernet link at the external equipment. Reconnect as necessary.

3. If the site is LNP-equipped, verify that this Ethernet link is not providing connectivity to the LSMS.

4. Remove and check the Ethernet cable.

5. If the above steps do not clear the fault, call Tekelec Technical Services at the appropriate number.

   Reference: “Customer Care Center” on page 1-13.

For a DCM to OAP link failure (indicated in the alarm message by *DCM A* or *DCM B*), use the following procedure:

1. Check Ethernet connections for the indicated DCM at both the DCM and the OAP. Reconnect as necessary.

2. Check and/or replace the Ethernet cable between the indicated DCM and its OAP.

3. If a spare DCM is on hand, replace the DCM.

4. If the above steps do not clear the fault, call Tekelec Technical Services at the appropriate number.

   Reference: “Customer Care Center” on page 1-13.

0085 - IP connection available

Description

IP^7 system: This message indicates that for an IPLIM or SS7IPGW link, one or more sockets have been opened for SS7 traffic.

EAGLE 5 ISS: This indicates that a previously broken link with either the external OAP (external customer link) or between the DCM card and the OAP now exists and is functioning properly. This UAM is also used to indicate that a previously broken link between the EPAP and DSM card is now functioning properly.

Example

```
station1234 99-03-30 16:28:08 EST  EAGLE 35.0.0
3582.0085    DLK 1217,B IP    IP Connection Available
```

Alarm Level

No alarm condition. The message is informational only.

Procedure

1. This message indicates a previous fault has been corrected. No further action is necessary.

0086 - IP Connection Congested

Description

This message indicates that an IPGW application socket is congested.

Example

```
RLGHNCXA03W 99-04-10 16:28:08 EST EAGLE 35.0.0.0
0046.0086  * IP7 LONGSOCKETNAME1 IP Connection Congested
```

Alarm Level

Minor

Procedure

1. Use your company procedures to check the network.

2. Reports on status can be obtained for each DCM card with the following commands:
   - `rept-stat-applsock` displays the status of the IP application sockets
   - `rept-stat-ls` displays the status of the MTP linksets
   - `rept-stat-slk` displays the status of the MTP signaling links
   - `pass:loc=xxxx:cmd="sockrtt"` displays the application socket statistical data
   - `pass:loc=xxxx:cmd="sockstate"` displays TALI state machine history for sockets
   - `pass:loc=xxxx:cmd="netstat -i"` displays TCP/IP network statistical information for all interfaces
   - `pass:loc=xxxx:cmd="netstat -p tcp"` displays TCP/IP network statistical information for the transmission control protocol
   - `pass:loc=xxxx:cmd="netstat -p udp"` displays TCP/IP network statistical information for the user datagram protocol
   - `pass:loc=xxxx:cmd="netstat -p ip"` displays TCP/IP network statistical information for the internet protocol
   - `pass:loc=xxxx:cmd="netstat -p icmp"` displays TCP/IP network statistical information for the internet control message protocol
   - `pass:loc=xxxx:cmd="netstat -m"` displays TCP/IP network statistical information for buffer pools

---

3. Call Tekelec Technical Services at the appropriate number.

   Reference: “Customer Care Center” on page 1-13

0087 - IP Connection manually removed

Description

This message indicates that an IP application socket has been manually removed from the system.

Example

```
RLGHNCXA03W 99-04-10 16:28:08 EST EAGLE 35.0.0.0
0046.0087    IP7 LONGSOCKETNAME1 IP Connection manually removed
```

Alarm Level

No alarm condition. The message is informational only.

Procedure

1. No action necessary.

0088 - Clocks A and B TSCs are out of sync

Description

It was detected by the OAM that clocks A and B have been out of synch for a excessive period of time. This alarm indicates a hardware failure in the GPSM-II.

Example

```
     RLGHNCXA21W 00-02-07 12:01:43 EST  EAGLE 35.0.0
**   0014.0088 ** CARD 1113 EOAM   Clocks A and B are out of sync
```

Alarm Level

Major

Procedure

1. Check the status of the GPSM-II card by entering the following command:

   rept-stat-card:loc=xxxx

   where **xxxx** is the card location in the output.

2. Reseat the GPSM-II card.

3. If the problem persists, replace the GPSM-II card using the card replacement procedures in Appendix A.

0089 - Clocks A and B TSCs are resynchronized

Description

A previous GPSM-II card fault is cleared.

Example

```
RLGHNCXA21W 00-02-07 12:01:43 EST  EAGLE 35.0.0
0014.0089    CARD 1113 EOAM    Clocks A and B TSCs are resynchronized
```

Alarm Level

No alarm condition. The message is informational only.

Procedure

1. This message indicates a previous fault has been corrected. No further action is necessary.

0092 - MDAL not responding

Description

This message indicates a problem with the maintenance disk and alarm card (MDAL).

Example

```
      RLGHNCXA21W 00-02-07 12:01:43 EST  EAGLE 35.0.0
 *C   0014.0092 *C CARD 1117 MDAL       MDAL not responding
```

Alarm Level

Critical

Procedure

1. Check the status of the MDAL card by entering the following command:

   rept-stat-card:loc=x

   where **x** is the card location stenciled on the shelf of the system.

2. Following is an example of the output using card location 1117:

```
RLGHNCXA03W 00-09-27 16:43:42 EST
CARD   VERSION    TYPE    APPL      PST           SST       AST
1117  ----------- MDAL    --------  OOS-MT        Isolated  -----
Command Completed.
```

3. Reseat the MDAL card.

4. If the problem persists, replace the MDAL card using the card replacement procedures in Appendix A.

0093 - MDAL alarm cleared

Description

A previous maintenance disk and alarm card (MDAL) card fault is cleared.

Example

```
RLGHNCXA21W 00-02-07 12:01:43 EST  EAGLE 35.0.0
0014.0093    CARD 1117 MDAL       MDAL alarm cleared
```

Alarm Level

No alarm condition. The message is informational only.

Procedure

1. This message indicates a previous fault has been corrected. No further action is necessary.

0096 - Card has been reloaded

Description

The indicated card has been reinitialized and reloaded with the appropriate data. This occurs as a result of a manual reset or software maintenance intervention.

Example

```
RLGHNCXA21W 00-02-07 12:01:43 EST  EAGLE 35.0.0
0014.0096    CARD 1218 SS7ANSI   Card has been reloaded
```

Alarm Level

No alarm condition. The message is informational only.

Procedure

1. Look for other reports associated with the indicated card. If an obituary report exists, the card malfunctioned. If this happens continuously, replace the defective card. If this is only an occasional condition, call Tekelec Technical Services at the appropriate number.

   Reference: “Customer Care Center” on page 1-13
   NOTE: See Appendix A for procedures on replacing cards.

0097 - IMT allowed

Description

The IMT bus has been returned to service.

Example

```
RLGHNCXA21W 00-02-07 11:02:30 EST  EAGLE 35.0.0
0100.0097    IMT SYSTEM            IMT allowed
              Card 1101, 1102, 1107, 1108
```

Alarm Level

No alarm condition. The message is informational only.

Procedure

1. This message indicates a previous fault has been corrected. No further action is necessary.

0098 - IMT inhibited

Description

The IMT bus has been removed from service by using the *rmv-imt:bus=x* command. The bus is no longer available to carry traffic.

Example

```
RLGHNCXA21W 00-02-07 11:02:30 EST  EAGLE 35.0.0
0100.0098    IMT SYSTEM        IMT inhibited
              Card 1101, 1102, 1107, 1108
```

Alarm Level

No alarm condition. The message is informational only.

Procedure

1. Verify the bus is not inhibited for maintenance purposes. If the bus has been inhibited for maintenance purposes, consult with the technician responsible before placing it back into service.

CAUTION: The IMT bus should not be left inhibited, as this may affect system performance.

2. If the IMT bus has not been inhibited for maintenance, or the maintenance is complete, enter the following command to place the IMT back into service:

   rst-imt:bus=x

   where **x** is the IMT bus to be returned to service.

0099 - Incompatible HW for provisioned slot

Description

An MPL card is in a slot provisioned as a DCM card running either IPLIM, IPLIMI, or SS7IPGW GPLs. The card is automatically inhibited.

Example

```
    RLGHNCXA21W 00-02-07 11:02:30 EST  EAGLE 35.0.0
**  0100.0099  ** CARD 1201  SS7ANSI  Incompatible HW for provisioned slot
                  HW VERIFICATION CODE: xxx
```

Alarm Level

Major

Procedure

1. If this message contains the optional line 'HW VERIFICATION CODE: xxx':

- Go Appendix E, Auto-Inhibit HW Verification Codes, and decode the xxx value in Table E-1. Correct the indicated problem.

  NOTE: A card with Verification Code 002, 003, 004, or 102 may possibly begin to boot continually before this alarm is displayed.

- After correcting the problem, the card will be in *out-of-service maintenance disabled state* (OOS-MT-DSBLD). Restore the card back to *in-service normal state* (IS-NR) with the `alw-card` command.

2. If this message does not contain the optional line 'HW VERIFICATION CODE: xxx', perform either of the following:

- Replace the MPL card with an DCM card.

OR

- Re-provision the slot for a LIMDS0 card. Refer to the *Database Administration Manual - SS7* for the correct procedures.

NOTE: See Appendix A, *Card Removal/Replacement Procedures* for details about replacing cards.

0102 - Motherboard BIP invalid

Description

The motherboard in the location indicated has an invalid Board ID Prom (BIP).

Example

```
      RLGHNCXA21W 00-02-07 12:01:43 EST  EAGLE 35.0.0
 *    0014.0102  * CARD 1201 SS7ANSI   Motherboard BIP invalid
```

Alarm Level

Minor

Procedure

1. The indicated card must be reprogrammed. Notify Tekelec Technical Services at the appropriate number. You will need to know the part number, revision level, and serial number of the card.

   Reference: “Customer Care Center” on page 1-13

2. The card can be reprogrammed with instructions from Tekelec Technical Services, or Tekelec Technical Services can dial into the system and reprogram the card remotely.

0103 - Motherboard BIP valid

Description

The Board ID Prom (BIP) for the specified motherboard is correctly programmed.

Example

```
RLGHNCXA21W 00-02-07 12:01:43 EST  EAGLE 35.0.0
0014.0103    CARD 1201 SS7ANSI   Motherboard BIP valid
```

Alarm Level

No alarm condition. The message is informational only.

Procedure

3. This message indicates a previous fault has been corrected. No further action is necessary.

0106 - IMT Bus alarm cleared

Description

The specified IMT bus has recovered from a fault.

Example

```
RLGHNCXA21W 00-02-07 12:01:43 EST  EAGLE 35.0.0
0014.0106    IMT BUS A          IMT Bus alarm cleared
             Card 1101, 1102, 1107, 1108
```

Alarm Level

No alarm condition. The message is informational only.

Procedure

1. This message indicates a previous fault has been corrected. No further action is necessary.

0107 - Minor IMT failure detected

Description

A minor fault has been detected on one of the IMT buses. A minor fault consists of at least one card fault but no more than two card faults.

Example

```
     RLGHNCXA21W 00-02-07 11:02:30 EST  EAGLE 35.0.0
*    0100.0107  * IMT BUS A               Minor IMT failure detected
                  Card 1101, 1102
```

Alarm Level

Minor

Procedure

1. Visually check the IMT LEDS on the front of the cards. A red LED or LEDs denotes an IMT fault. If the top LED of the pair is red, there is a fault on IMT A. If the bottom LED is red, there is a fault on IMT B. See Figure 3-9.

Figure 3-9. Card LEDs

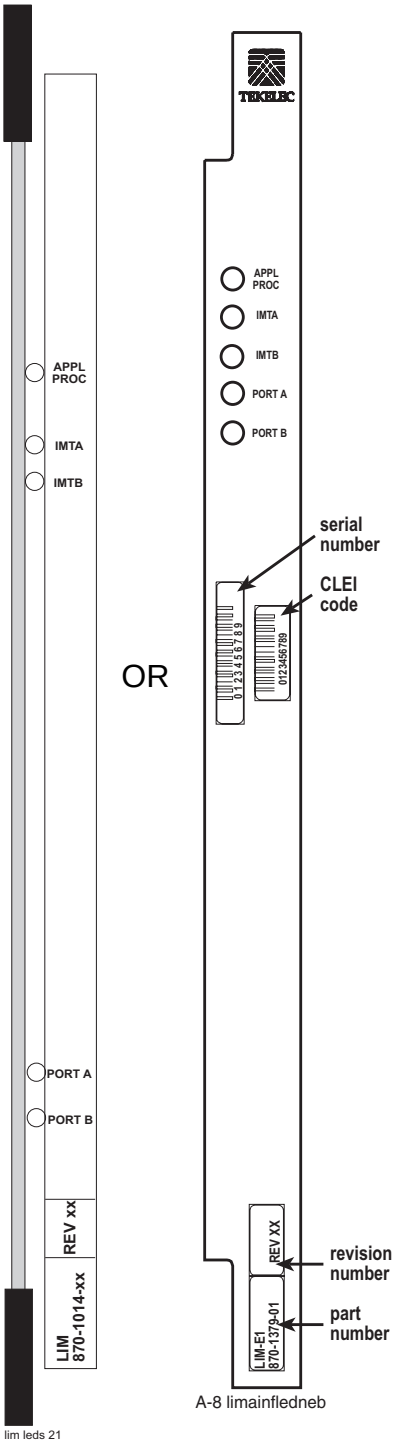

2. Using the card location(s) noted in step 2, enter the following command to connect the card back to the IMT:

conn-imt:loc=x:bus=y

where **x** is the card location stenciled on the shelf of the system.
y is the IMT bus to be returned to service.

The following message appears using card location 1106 and IMT bus A:

```
RLGHNCXA03W 00-02-07 11:02:30 EST  EAGLE 35.0.0
Connect IMT Bus A command issued to card 1106
```

---

3. If the fault does not clear, reseat the affected card.

WARNING: Reseating or replacing a LIM will cause both links on the card to fail. If the card is a LIM, place the links on the LIM out of service by entering the *dact-slk* command.

---

4. If the fault does not clear, replace the affected card.

---

5. If the fault does not clear, replace the IPMX card servicing the affected card.

WARNING: Replacing an IPMX card causes the IMT to go down. (IPMX in Slot 09 affects IMT A and IPMX in Slot 10 affects IMT B.) Do not perform this step if the other bus also has a fault. Contact Tekelec Technical Services at the appropriate number.
Reference: "Customer Care Center" on page 1-13.

---

6. If the fault has cleared and any of these cards are LIMs, place the links assigned to these cards back into service using the *act-slk* command.

---

7. If these steps do not clear the fault, call Tekelec Technical Services at the appropriate number.

Reference: "Customer Care Center" on page 1-13
NOTE: See Appendix A for procedures on replacing cards.

0108 - Major IMT failure detected

Description

A major fault has been detected on one of the IMT buses. A major fault consists of three or more faults on the IMT bus.

Example

```
   RLGHNCXA21W 00-02-07 11:02:30 EST  EAGLE 35.0.0
**  0100.0108 ** IMT BUS A           Major IMT failure detected
                 Card 1101, 1102, 1107, 1108
```

Alarm Level

Major

Procedure

1. Enter the following command to check the status of the IMT:

rept-stat-imt

If the entire IMT is down, continue with Step 6.

2. Visually check the IMT LEDS on the front of the cards. A red LED or LEDs denotes an IMT fault. If the top LED of the pair is red, there is a fault on IMT A. If the bottom LED is red, there is a fault on IMT B. See Figure 3-10.

Figure 3-10. Card LEDs

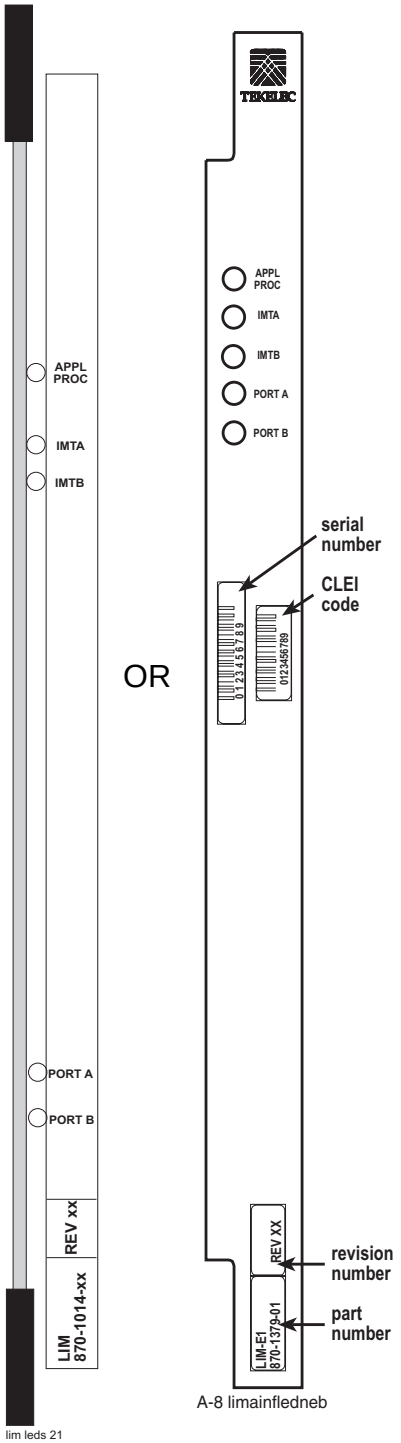

3. Note the card location or locations for cards with a red LED(s).

4. Using the card location(s) noted in step 3, enter the following command to connect the card(s) back to the IMT:

conn-imt:loc=x:bus=y

where **x** is the card location stenciled on the shelf of the system.
y is the IMT bus to be returned to service.

The following message appears using card location 1106 and IMT bus A:

```
RLGHNCXA03W 00-02-07 11:02:30 EST  EAGLE 35.0.0
Connect IMT Bus A command issued to card 1106
```

---

5. If the connection command is successful, the following message appears:

```
RLGHNCXA03W 00-02-07 11:02:30 EST  EAGLE 35.0.0
0100.0006    IMT   BUS A         Card connected to IMT
```

---

6. If the fault does not clear, enter the following command:
inh-imt:bus=x
where *x* = faulty IMT bus.

WARNING: This command removes the faulty IMT bus from service, causing all cards to disconnect from the designated bus. Step 8 must be completed once this step (6) is performed. If the technician has any questions about using this command, contact Tekelec Technical Services at the appropriate number. Reference: "Customer Care Center" on page 1-13.

---

7. Enter the following command to test the IMT bus:
tst-imt:bus=x
where *x* = the inhibited IMT bus.

An example of the output follows:

```
RLGHNCXA03W 97-09-27 12:47:07 EST EAGLE 35.0.0
IMT Fault Isolation Bus B
Fault Location    Probable Cause  Failure(s)
Card  1201        Card 1201
                                  Pass-through Test Failed
Card  1301        Card 1301
                                  Pass-through Test Failed
```

NOTE: When *tst-imt* completes, either through normal termination of the command or because the command is aborted, Step 8 MUST be completed.

---

8. Enter the following command to change the state of inhibited IMT to IS-ANR:
alw-imt:bus=x
where *x* = the inhibited IMT bus.

---

9. Reseat the affected card(s). Probable causes are listed in order of most probable to least probable. The listed components should be reseated in order listed by the output of the *tst-imt* command.

WARNING: Reseating or replacing a LIM will cause both links on the card to fail. If the card is a LIM, place the links on the LIM out of service by entering the *dact-slk* command.

---

10. If the fault does not clear, replace the affected card(s). Probable causes are listed in order of most probable to least probable. The listed components should be replaced in order listed by the output of the *tst-imt* command.

---

11. If the fault does not clear, replace the IPMX card servicing the affected card(s).

WARNING: Replacing an IPMX card causes the IMT to go down. (IPMX in Slot 09 affects IMT A and IPMX in Slot 10 affects IMT B.)

---

12. If the fault has cleared and any of these cards are LIMs, place the links assigned to these cards back into service using the *act-slk* command.

---

13. If these steps do not clear the fault, call Tekelec Technical Services at the appropriate number.

Reference: “Customer Care Center” on page 1-13

NOTE: See Appendix A for procedures on replacing cards.

0109 - All IMT System level alarms cleared

Description

Both IMT busses are functioning.

Example

```
RLGHNCXA21W 00-02-07 11:02:30 EST  EAGLE 35.0.0
0100.0109    IMT SYSTEM           All IMT System level alarms cleared
```

Alarm Level

No alarm condition. The message is informational only.

Procedure

1. This message indicates a previous fault has been corrected. No further action is necessary.

0110 - Failure detected on one IMT bus

Description

A fault has been detected on one IMT bus.

Example

```
     RLGHNCXA21W 00-02-07 11:02:30 EST  EAGLE 35.0.0
*    0100.0110  * IMT SYSTEM          Failure detected on one IMT bus
```

Alarm Level

Minor

Procedure

1. Visually check the IMT LEDS on the front of the cards. A red LED or LEDs denotes an IMT fault. If the top LED of the pair is red, there is a fault on IMT A. If the bottom LED is red, there is a fault on IMT B. See Figure 3-11.

Figure 3-11. Card LEDs

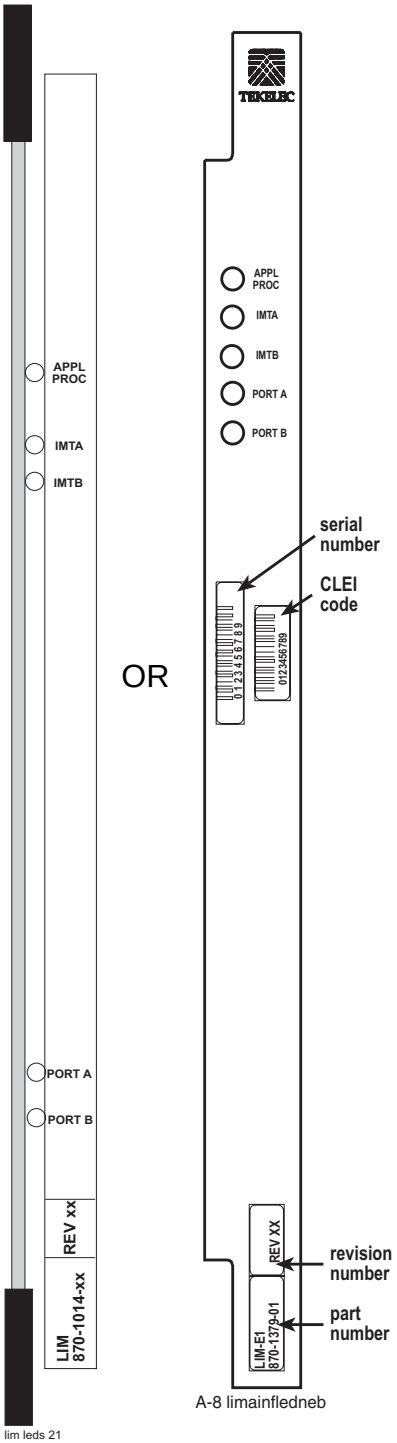

2. Note the card location or locations for cards with a red LED(s).

3. Using the card location(s) noted in step 2, connect the card back to the IMT with the command *conn-imt*. For example, enter:

conn-imt:loc=x:bus=y

where **x** is the card location stenciled on the shelf of the system.
y is the IMT bus to be returned to service.

The following message appears using card location 1106 and IMT bus A

```
RLGHNCXA03W 00-02-07 11:02:30 EST  EAGLE 35.0.0
Connect IMT Bus A command issued to card 1106
```

4. If the connection command is successful, the following message appears:

```
RLGHNCXA03W 00-02-07 11:02:30 EST  EAGLE 35.0.0
 0100.0006    IMT   BUS A         Card connected to IMT
```

5. If the connection command is not successful and the fault does not clear, reseat the card

WARNING: Resetting, reseating, or replacing a LIM will cause both links on the card to fail. If the card is a LIM, place the links on the LIM out of service by entering the *dact-slk* command.

6. If the fault does not clear, replace the affected card.

7. If the fault does not clear, replace the IPMX card servicing the affected card.

WARNING: Replacing an IPMX card causes the IMT to go down. (IPMX in Slot 09 affects IMT A and IPMX in Slot 10 affects IMT B.) Do not perform this step if the other bus also has a fault. Contact Tekelec Technical Services at the appropriate number.
Reference: “Customer Care Center” on page 1-13.

8. If the fault has cleared and any of these cards are LIMs, place the links assigned to these cards back into service using the *act-slk* command.

9. If these steps do not clear the fault, call Tekelec Technical Services at the appropriate number.

Reference: “Customer Care Center” on page 1-13
NOTE: See Appendix A for procedures on replacing cards.

0111 - Failure on both IMT A and IMT B

Description

A major fault occurred on one IMT bus and a minor fault has occurred on the other. Or, there is a minor fault on both IMT buses. A minor fault occurs when one or two cards are disconnected from the IMT bus. A major fault occurs when three or more cards are disconnected from the IMT bus.

Example

```
   RLGHNCXA21W 00-02-07 11:02:30 EST  EAGLE 35.0.0
**  0100.0111 ** IMT SYSTEM          Failure on both IMT A and IMT B
```

Alarm Level

Major

Procedure

1. Check the status of the IMTs by entering the *rept-stat-imt* command. Contact Tekelec Technical Services at the appropriate number.

   Reference: “Customer Care Center” on page 1-13.

0112 - Major failures detected on both IMTs

Description

Major faults have been detected on both IMT buses.

Example

```
     RLGHNCXA21W 00-02-07 11:02:30 EST  EAGLE 35.0.0
 *C  0100.0112 *C IMT SYSTEM        Major failures detected on both IMTs
```

Alarm Level

Critical

Procedure

1. Check the status of the IMTs by entering the *rept-stat-imt* command. Contact Tekelec Technical Services at the appropriate number.

   Reference: “Customer Care Center” on page 1-13.

0113 - Clock alarm(s) cleared

Description

All primary and secondary clock sources are functioning.

Example

```
RLGHNCXA21W 00-02-07 11:02:30 EST  EAGLE 35.0.0
0100.0113    CLOCK SYSTEM        Clock alarm(s) cleared
```

Alarm Level

No alarm condition. The message is informational only.

Procedure

1. This message indicates a previous fault has been corrected. No further action is necessary.

0114 - System IP TPS threshold exceeded

Description

This message indicates that the actual system transaction rate is approaching the current System IPGWx capacity value.

Example

```
      RLGHNCXA21W 00-02-07 12:01:43 EST  EAGLE 35.0.0
**    0014.0114 **   IP TPS SYSTEM        System IP TPS threshold exceeded
```

Alarm Level

Major

Procedure

1. Enter the following command to display the current options for the IPGWx.

rtrv-sg-opts

Following is an example of the output:

```
RLGHNCX A03W 00-02-07 12:02:36 EST  EAGLE 35.0.0
SYNC:           TALI
SRKQ:           250
DRKQ:           750
SNMPCONT:       john doe 555-123-4567
GETCOMM:        public
SETCOMM:        private
TRAPCOMM:       public
INHFEPALM:      YES
SCTPCSUM:       adler32
IPGWABATE:      NO
IPLIMABATE:     NO

Command Completed.
```

2. Examine the output.

If the value is less than 100 (the limit), this percentage can be increased using the *chg-sg-opts* command. Refer to the *Commands Manual* for details on using this command.

If the value is at 100 (the limit), a new feature key is required to increase the IPGWx system IP TPS. Contact your Tekelec account representative to purchase a new feature key.

0115 - Linkset IP TPS threshold exceeded

Description

This message indicates that the actual linkset transaction rate exceeds the provisioned linkset IPGWx TPS.

Example

```
       RLGHNCXA21W 00-02-07 12:01:43 EST  EAGLE 35.0.0
**     0014.0115 **   LSN lsgw1103   Linkset IP TPS threshold exceeded
```

Alarm Level

Major

Procedure

1. Enter the following command to display the current and peak IPGWx TPS utilization of the linkset specified in the output.

rept-stat-iptps

Following is an example of the output:

```
eagle10115 03-05-06 09:49:20 EST EAGLE 35.0.0

IP TPS USAGE REPORT

           THRESH  CONFIG         TPS     PEAK      PEAKTIMESTAMP
-------------------------------------------------------------------
SYSTEM
CLLI1234567  100%  100000  TX:   4127     4550  03-05-05 09:49:19
                         RCV:   3962     4450  03-05-05 09:49:19
-------------------------------------------------------------------
LSN
LSGW1101      80%    4000  TX:   3700     4000  03-05-05 09:49:19
                         RCV:   3650     4000  03-05-05 09:49:19
LSGW1103      80%     500  TX:    427      550  03-05-05 09:49:19
                         RCV:    312      450  03-05-05 09:49:19
-------------------------------------------------------------------

Command Completed.
```

2. Refer to the *Commands Manual* to interpret the output.
If the linkset has adequate bandwidth, then the IP TPS for the linkset can be increased (using the *chg-ls* command), provided the current IPGWx system IP TPS setting allows for this. The IP TPS LS alarm threshold percent (*lsusealm*) can also be adjusted if allowed by the current setting. If the linkset does not have adequate bandwidth, then more links or different routing strategies may be required to correct the problem.

0116 - Link expected IP TPS threshold exceeded

Description

This message indicates that the actual link transaction rate is approaching the link's *fair share* of provisioned linkset capacity.

Example

```
   RLGHNCXA21W 00-12-07 12:01:43 EST  EAGLE 35.0.0
*  0014.0116  * SLK 1104,A LSA01   Link expected IP TPS threshold exceeded
                SLC=01   FECLLI=A1234567890
```

Alarm Level

Minor

Procedure

1. Enter the following command to display the current and peak IPGWx TPS utilization of the linkset specified in the output.

rept-stat-iptps:lsn=xxxxxx

where *xxxxxx* is the linkset name as defined in the output.

Following is an example of the output:

```
    eagle10115 03-05-06 09:49:20 EST EAGLE 35.0.0

    IP TPS USAGE REPORT

               THRESH  CONFIG         TPS     PEAK       PEAKTIMESTAMP
    ------------------------------------------------------------------
    LSN
    LSGW1101     100%  188000  TX:    800      800  03-05-05 09:49:19
                             RCV:    800      800  03-05-05 09:49:19
    ------------------------------------------------------------------
    LOC  PORT
    1101    A     80%    ----  TX:    800      800  03-05-05 09:49:19
                             RCV:    800      800  03-05-05 09:49:19
    1103    A     80%    ----  TX:    800      800  03-05-05 09:49:19
                             RCV:    800      800  03-05-05 09:49:19
    ------------------------------------------------------------------

    Command Completed.
;
```

2. Refer to the *Commands Manual* to interpret the output.
If the linkset has adequate bandwidth, then the IP TPS for the linkset can be increased (using the *chg-ls* command), provided the current IPGWx system IP TPS setting allows for this. The IP TPS SLK alarm threshold percent (*slkusealm*) can also be adjusted if allowed by the current setting. If the linkset does not have adequate bandwidth, then more links are required to correct the problem.

0117 - System IP TPS normal

Description

This message indicates the total reported IP TPS for all links in IPGWx linksets has fallen below the configured system threshold.

Example

```
RLGHNCXA21W 00-02-07 12:01:43 EST  EAGLE 35.0.0
0014.0117      IP TPS SYSTEM        System IP TPS normal
```

Alarm Level

No alarm condition. The message is informational only.

Procedure

1. This message indicates a previous fault has been corrected. No further action is necessary.

0118 - Linkset IP TPS normal

Description

This message indicates the total usage for the linkset TPS rate has fallen below the configured linkset TPS rate.

Example

```
RLGHNCXA21W 00-02-07 12:01:43 EST  EAGLE 35.0.0
0014.0118      LSN lsgw1103   Linkset IP TPS normal
```

Alarm Level

No alarm condition. The message is informational only.

Procedure

1. This message indicates a previous fault has been corrected. No further action is necessary.

0119 - Link IP TPS normal

Description

This message indicates the total usage for the linkset exceeds the linkset threshold for the linkset's IP TPS.

Example

```
RLGHNCXA21W 00-12-07 12:01:43 EST  EAGLE 35.0.0
0014.0119    SLK 1104,A LSA01   Link IP TPS normal
             SLC=01   FECLLI=A1234567890
```

Alarm Level

No alarm condition. The message is informational only.

Procedure

1. This message indicates a previous fault has been corrected. No further action is necessary.

0128 - All clocks have failed

Description

A fault has been detected on all system clocks.

Example

```
           RLGHNCXA21W 00-12-07 11:02:30 EST  EAGLE 35.0.0
     *C    0100.0128 *C CLOCK SYSTEM        All clocks have failed
```

Alarm Level

Critical

Procedure

1. Verify the status of the clock with the *rept-stat-clk* command. If both clocks are idle, check the source clock into the system. Follow local maintenance procedures to repair the source clock.

2. Verify the clock cables are connected to the shelf backplane (refer to the *Installation Manual* for cable location). If any cables are loose, reconnect the cable.

3. If the clock source is not at fault, try reseating the TDM cards.

4. If the message appears again, replace the TDM cards using the card replacement procedures in Appendix A.

5. If the fault still does not clear, call Tekelec Technical Services at the appropriate number.

   Reference: “Customer Care Center” on page 1-13

   NOTE: See Appendix A for procedures on replacing cards.

0130 - Card successfully loaded with data

Description

The indicated card has been reloaded by the system with the appropriate GPL and tables.

Example

```
RLGHNCXA21W 00-12-07 12:01:43 EST  EAGLE 35.0.0
0014.0130    CARD 1304 SCCP      Card successfully loaded with data
```

Alarm Level

No alarm condition. The message is informational only.

Procedure

1. This message indicates a previous fault has been corrected. No further action is necessary.

0132 - Loading failed: table not found

Description

This indicates an error in an upgrade procedure. Either an incorrect file or table was entered. This message could also indicate the file or table being loaded is corrupted and is not recognized by the system.

Example

```
      RLGHNCXA21W 00-12-07 12:01:43 EST  EAGLE 35.0.0
**    0014.0132  ** CARD 1304 SCCP      Loading failed: table not found
```

Alarm Level

Major

Procedure

1. Call Tekelec Technical Services at the appropriate number.

   Reference: “Customer Care Center” on page 1-13

0133 - Loading failed: data read Error

Description

An error occurred on the active MASP while data tables were loaded.

Example

```
      RLGHNCXA21W 00-12-07 12:01:43 EST  EAGLE 35.0.0
**    0014.0133  ** CARD 1304 SCCP    Loading failed: data read error
```

Alarm Level

Major

Procedure

1. To verify that both databases are at the same level and are not corrupted, enter:

rept-stat-db

The following is an example of output for a corrupted database.

```
 bothwagm03w 99-01-08 19:52:08 EST EAGLE 35.0.0
    rept-stat-lsms
    Command entered at terminal #1.
;

    bothwagm03w 99-01-08 19:52:08 EST EAGLE 35.0.0
                         GPL          PST             SST          AST
    ------------------------------------------------------------------------
    LSMS SYSTEM                       IS-NR           Active       -----
    TDM TRM       8                   IS-NR           Active       -----
    TDM TRM       9                   IS-NR           Active       -----
    OAP           A    023-065-000    IS-NR           Active       -----
    OAP           B    023-065-000    IS-NR           Active       -----
    Q.3 Assoc     A1                  IS-NR           Active       -----
    Q.3 Assoc     B1                  IS-NR           Active       -----

    LSMS SYSTEM ALARM STATUS  = No Alarms.
    OAP A  ALARM STATUS       = No Alarms.
    OAP B  ALARM STATUS       = No Alarms.
    Q.3 Assoc A1 ALARM STATUS = No Alarms.
    Q.3 Assoc B1 ALARM STATUS = No Alarms.

    Command Completed.
;
```

2. To verify the integrity of the database, enter:

aud-data

3. If there is a problem with the database, follow the procedures in the *Database Administration Manual* for resolving database inconsistencies.

4. If the problem still exists, call Tekelec Technical Services at the appropriate number.

   Reference: “Customer Care Center” on page 1-13

0134 - Loading failed: bad checksum returned

Description

The GPL checksum, which is used to verify the data, indicates an error during file transfer. The file (GPL) needs to be downloaded again.

Example

```
     RLGHNCXA21W 00-12-07 12:01:43 EST  EAGLE 35.0.0
**   0014.0134  ** CARD 1304 SCCP  Loading failed: bad checksum returned
```

Alarm Level

Major

Procedure

1. Reseat the indicated card. This may have caused the transmission error.
2. When the card has been reseated, it attempts to reload automatically.
3. If the download fails again, call Tekelec Technical Services at the appropriate number.

   Reference: “Customer Care Center” on page 1-13

0135 - Loading failed: GPL load timeout

Description

There was a timeout caused by the loading process.

Example

```
      RLGHNCXA21W 00-12-07 12:01:43 EST  EAGLE 35.0.0
 **   0014.0135  ** CARD 1304 SCCP    Loading failed: GPL load timeout
```

Alarm Level

Major

Procedure

1. Verify the card is properly seated. If not, reseat the indicated card.

2. If the card is properly seated, the problem corrects itself. No further action is necessary.

0136 - Loading failed: data load timeout

Description

The download process timed out on the MASP. This could be caused by an improperly programmed BIP on the daughterboard of the card being loaded.

Example

```
      RLGHNCXA21W 00-12-07 12:01:43 EST  EAGLE 35.0.0
**    0014.0136  ** CARD 1304 SCCP    Loading failed: data load timeout
```

Alarm Level

Major

Procedure

1. Use the *rtrv-bip* command (debug command) to verify the BIP on the applique of the indicated card. Refer to the *Commands Manual* for details on how to use this command.

2. If the BIP is invalid, it must be reprogrammed. Notify Tekelec Technical Services at the appropriate number.

   You will need to know the part number, revision level, and serial number of the card.

   Reference: “Customer Care Center” on page 1-13

3. The card can be reprogrammed with instructions from Tekelec Technical Services, or Tekelec Technical Services can dial into the system and reprogram the card remotely.

4. If the BIP is valid, reseat the card. This should correct the problem. If not, call Tekelec Technical Services at the appropriate number.

   Reference: “Customer Care Center” on page 1-13

0137 - Loading failed: invalid GPL

Description

This message indicates that the GPL file is corrupt or there was a failure in the IMT bus.

Example

```
      RLGHNCXA21W 00-12-07 12:01:43 EST  EAGLE35.0.0
**    0014.0137  ** CARD 1304 SCCP   Loading failed: invalid GPL
```

Alarm Level

Major

Procedure

1. This problem should correct itself.

2. If the problem still exists, call Tekelec Technical Services at the appropriate number.

   Reference: “Customer Care Center” on page 1-13

0138 - Loading failed: GPL format error

Description

This message indicates a corrupted GPL file.

Example

```
      RLGHNCXA21W 00-12-07 12:01:43 EST  EAGLE 35.0.0
 **   0014.0138  ** CARD 1304 SCCP     Loading failed: GPL format error
```

Alarm Level

Major

Procedure

1. Call Tekelec Technical Services at the appropriate number.

   Reference: “Customer Care Center” on page 1-13

0139 - Loading failed: disk read prep error

Description

This message indicates the GPL version is not current, and incompatible with the system load.

Example

```
     RLGHNCXA21W 00-12-07 12:01:43 EST  EAGLE 35.0.0
 **  0014.0139  ** CARD 1304 SCCP   Loading failed: disk read prep error
```

Alarm Level

Major

Procedure

1. Refer to the upgrade procedure sent with the software. If this procedure was followed correctly, and the problem still exists, call Tekelec Technical Services at the appropriate number.

   Reference: “Customer Care Center” on page 1-13

0140 - Loading failed: disk read response error

Description

This message indicates there was an error in reading the fixed disk.

Example

```
     RLGHNCXA21W 00-12-07 12:01:43 EST  EAGLE 35.0.0
**   0014.0140  ** CARD 1304 SCCP  Loading failed:disk read response error
```

Alarm Level

Major

Procedure

1. If the disk was just installed in the system, try the load again.

2. If the problem occurs again, call Tekelec Technical Services at the appropriate number.

   Reference: “Customer Care Center” on page 1-13.

0141 - Loading failed: disk read failed

Description

This message indicates there was a failure while reading the fixed disk on the active TDM.

Example

```
      RLGHNCXA21W 00-12-07 12:01:43 EST  EAGLE 35.0.0
**    0014.0141  ** CARD 1304 SCCP     Loading failed: disk read failed
```

Alarm Level

Major

Procedure

1. Try the load again.

2. If the problem persists, replace the TDM with the corrupted media, using the procedures in Appendix A.

3. If this message appears again, call Tekelec Technical Services at the appropriate number.

   Reference: “Customer Care Center” on page 1-13.

0142 - System release alarm cleared

Description

The SYSREL.SYS file has been installed on the active fixed disk and the alarm has been cleared.

Example

```
RLGHNCXA21W 00-12-07 12:01:43 EST  EAGLE 35.0.0
0014.0142    GPL SYSTEM OAM     System release alarm cleared
```

Alarm Level

No alarm condition. The message is informational only.

Procedure

1. This message indicates a previous fault has been corrected. No further action is necessary.

0143 - System release GPL(s) not approved

Description

This message indicates that one or more approved GPLs do not match the version specified in the SYSREL.SYS file.

Example

```
     RLGHNCXA21W 00-12-07 12:01:43 EST  EAGLE 35.0.0
*    0014.0143  * GPL SYSTEM OAM       System release GPL(s) not approved
```

Alarm Level

Minor

Procedure

1. Use the *rtrv-gpl* command to display the GPLs on the system. The output of the *rtrv-gpl* command can be used to identify the GPLs that do not match the versions specified in the SYSREL.SYS file.

2. Use the *chg-gpl* command to upload the required version of the GPL.

3. Use the *act-gpl* command to make the uploaded GPL the approved GPL.

0144 - System release version unknown

Description

This message indicates that a failure has occurred while accessing the SYSREL.SYS file. Either the SYSREL.SYS file could not be found on the active fixed disk or has become corrupted and is not accessible.

Example

```
      RLGHNCXA21W 00-12-07 12:01:43 EST
*     0014.0144  * GPL SYSTEM EOAM      System release version unknown
```

Alarm Level

Minor

Procedure

1. Insert the system removable cartridge containing the SYSREL.SYS file into the maintenance disk and alarm card (MDAL).

2. Enter the following command to upload the SYSREL.SYS file from the system removable cartridge to the active fixed disk:

   chg-gpl:gpl=utility

3. If this message appears again, call Tekelec Technical Services at the appropriate number.

   Reference: “Customer Care Center” on page 1-13

0145 - HS Clock A for card failed, B normal

Description

This indicates that the High Speed clock A signal for the indicated card is not present.

Example

```
     station1234 99-03-05 16:28:08 EST  EAGLE 35.0.0
 *   0053.0145    * CARD 1115 OAM   HS Clock A for card failed, B normal
```

Alarm Level

Minor

Procedure

1. Use the *rept-stat-clk* command to determine the status of the clock. The output indicates how many cards are using the specified clock, and how many cards are reporting fault with the specified clock.

Following is an example of the possible output:

```
rept-stat-clk
    Command entered at terminal #3.
;

    tekelecstp 99-03-05 13:34:15 EST EAGLE 35.0.0
    CARD LOC= 1114 (Active   )       CARD LOC= 1116 (Isolated )
    PRIMARY BITS      = Active        PRIMARY BITS      = -----
    SECONDARY BITS    = Idle          SECONDARY BITS    = -----
    HS PRIMARY CLK    = Active        HS PRIMARY CLK    = -----
    HS SECONDARY CLK  = Idle          HS SECONDARY CLK  = -----
    HS CLK TYPE       = E1 UNFRAMED   HS CLK TYPE       = -----
    HS CLK LINELEN    = SHORTHAUL     HS CLK LINELEN    = -----

                                      PST           SST       AST
    SYSTEM CLOCK                      IS-NR         ACTIVE    ALMINH
    ALARM STATUS     = No Alarms.
    # Cards using CLK A = 009         # Cards with bad CLK A = 000
    # Cards using CLK B = 000         # Cards with bad CLK B = 009
    # Cards using CLK I = 000

                                      PST           SST       AST
    HS SYSTEM CLOCK                   IS-NR         ACTIVE    ALMINH
    ALARM STATUS     = No Alarms.
    # Cards using HSCLK A = 001       # Cards with bad HSCLK A = 000
    # Cards using HSCLK B = 000       # Cards with bad HSCLK B = 002
    # Cards using HSCLK I = 000

    Command Completed.
;
```

CAUTION: Resetting, reseating, or replacing a card will cause both links on the card to fail. If the card is a LIM, place the links on the LIM out of service by entering the *dact-slk* command.

2. If only one card is reporting fault, reset the card.

---

3. If the fault has not cleared, reseat the card.

---

4. If the fault has not cleared, replace the card. (See Appendix A for procedures on replacing cards).

---

5. If the fault still has not cleared, replace the TDM card in MASP A.

---

6. If more than one card is reporting fault with the designated clock, check the clock cable connection at the shelf backplane (refer to the *Installation Manual* for cable location). If the clock cable is at fault, replace the clock cable.

---

7. If the fault has cleared and any of these cards are LIMs, place the links assigned to these cards back into service using the *act-slk* command.

0146 - HS Clock B for card failed, A normal

Description

This indicates that the High Speed clock B signal for the indicated card is not present.

Example

```
     station1234 99-03-05 16:28:08 EST  EAGLE 35.0.0
 *   0053.0146    * CARD 1115 OAM   HS Clock B for card failed, A normal
```

Alarm Level

Minor

Procedure

1. Use the *rept-stat-clk* command to determine the status of the clock. The output indicates how many cards are using the specified clock, and how many cards are reporting fault with the specified clock.

Following is an example of the possible output:

```
rept-stat-clk
    Command entered at terminal #3.
;

    tekelecstp 99-03-05 13:34:15 EST EAGLE 35.0.0
    CARD LOC= 1114 (Active   )       CARD LOC= 1116 (Isolated )
    PRIMARY BITS      = Active        PRIMARY BITS      = -----
    SECONDARY BITS    = Idle          SECONDARY BITS    = -----
    HS PRIMARY CLK    = Active        HS PRIMARY CLK    = -----
    HS SECONDARY CLK  = Idle          HS SECONDARY CLK  = -----
    HS CLK TYPE       = E1 UNFRAMED   HS CLK TYPE       = -----
    HS CLK LINELEN    = SHORTHAUL     HS CLK LINELEN    = -----

                                      PST           SST       AST
    SYSTEM CLOCK                      IS-NR         ACTIVE    ALMINH
    ALARM STATUS     = No Alarms.
    # Cards using CLK A = 009         # Cards with bad CLK A = 000
    # Cards using CLK B = 000         # Cards with bad CLK B = 009
    # Cards using CLK I = 000

                                      PST           SST       AST
    HS SYSTEM CLOCK                   IS-NR         ACTIVE    ALMINH
    ALARM STATUS     = No Alarms.
    # Cards using HSCLK A = 001       # Cards with bad HSCLK A = 000
    # Cards using HSCLK B = 000       # Cards with bad HSCLK B = 002
    # Cards using HSCLK I = 000

    Command Completed.
;
```

CAUTION: Resetting, reseating, or replacing a card will cause both links on the card to fail. If the card is a LIM, place the links on the LIM out of service by entering the *dact-slk* command.

2. If only one card is reporting fault, reset the card.

---

3. If the fault has not cleared, reseat the card.

---

4. If the fault has not cleared, replace the card. (See Appendix A for procedures on replacing cards).

---

5. If the fault still has not cleared, replace the TDM card in MASP B.

---

6. If more than one card is reporting fault with the designated clock, check the clock cable connection at the shelf backplane (refer to the *Installation Manual* for cable location). If the clock cable is at fault, replace the clock cable.

---

7. If the fault has cleared and any of these cards are LIMs, place the links assigned to these cards back into service using the *act-slk* command.

0147 - High Speed Clocks A and B for card failed

Description

The High Speed A and B clock sources for the indicated card are not present.

Example

```
   station1234 99-03-05 16:28:08 EST  EAGLE 35.0.0
*  0053.0147  * CARD 1115 OAM   High Speed Clocks A and B for card failed
```

Alarm Level

Minor

Procedure

1. Use the *rept-stat-clk* command to determine the status of the clocks. The output indicates how many cards are using one of the specified clocks, and how many cards are reporting faults.

Following is an example of the possible output:

```
rept-stat-clk
    Command entered at terminal #3.
;

    tekelecstp 99-03-05 13:34:15 EST EAGLE 35.0.0
    CARD LOC= 1114 (Active   )       CARD LOC= 1116 (Isolated )
    PRIMARY BITS      = Active        PRIMARY BITS      = -----
    SECONDARY BITS    = Idle          SECONDARY BITS    = -----
    HS PRIMARY CLK    = Active        HS PRIMARY CLK    = -----
    HS SECONDARY CLK  = Idle          HS SECONDARY CLK  = -----
    HS CLK TYPE       = E1 UNFRAMED   HS CLK TYPE       = -----
    HS CLK LINELEN    = SHORTHAUL     HS CLK LINELEN    = -----

                                      PST           SST       AST
    SYSTEM CLOCK                      IS-NR         ACTIVE    ALMINH
    ALARM STATUS     = No Alarms.
    # Cards using CLK A = 009         # Cards with bad CLK A = 000
    # Cards using CLK B = 000         # Cards with bad CLK B = 009
    # Cards using CLK I = 000

                                      PST           SST       AST
    HS SYSTEM CLOCK                   IS-NR         ACTIVE    ALMINH
    ALARM STATUS     = No Alarms.
    # Cards using HSCLK A = 001       # Cards with bad HSCLK A = 000
    # Cards using HSCLK B = 000       # Cards with bad HSCLK B = 002
    # Cards using HSCLK I = 000

    Command Completed.
;
```

CAUTION: Resetting, reseating, or replacing a card will cause both links on the card to fail. If the card is a LIM, place the links on the LIM out of service by entering the *dact-slk* command.

2. If only one card is reporting fault, reset the card.

---

3. If the fault has not cleared, reseat the card.

---

4. If the fault has not cleared, replace the card. (See Appendix A for procedures on replacing cards).

---

5. If the fault still has not cleared, replace the TDM card in MASP B.

---

6. If more than one card is reporting fault with the designated clock, check the clock cable connection at the shelf backplane (refer to the *Installation Manual* for cable location). If the clock cable is at fault, replace the clock cable.

---

7. If the fault has cleared and any of these cards are LIMs, place the links assigned to these cards back into service using the *act-slk* command.

0148 - High Speed Clock A for card normal

Description

This indicates that the High Speed clock A signal for the indicated card has returned to a normal, functional state.

Example

```
station1234 99-03-05 16:28:08 EST  EAGLE 35.0.0
0053.0148     CARD 1115 OAM   High Speed Clock A for card normal
```

Alarm Level

No alarm condition. The message is informational only.

Procedure

1. This message indicates a previous fault has been corrected. No further action is necessary.

0149 - High Speed Clock B for card normal

Description

This indicates that the High Speed clock B signal for the indicated card has returned to a normal, functional state.

Example

```
station1234 99-03-05 16:28:08 EST  EAGLE 35.0.0
0053.0149     CARD 1115 OAM   High Speed Clock B for card normal
```

Alarm Level

No alarm condition. The message is informational only.

Procedure

1. This message indicates a previous fault has been corrected. No further action is necessary.

0150 - STPLAN is available

Description

This message indicates that the application communication modules (ACMs) are in service with no failure conditions.

Example

```
RLGHNCXA21W 00-12-07 12:01:43 EST  EAGLE 35.0.0
0014.0150    SLAN SYSTEM       STPLAN is available
```

Alarm Level

No alarm condition. The message is informational only.

Procedure

1. No further action is necessary.

0151 - STPLAN capacity normal,card(s) abnormal

Description

This message indicates that one or more application communication modules (ACMs) are out of service, but the STPLAN capacity of the system is within acceptable limits.

Example

```
RLGHNCXA21W 00-12-07 12:01:43 EST  EAGLE 35.0.0
0014.0151    SLAN SYSTEM    STPLAN capacity normal,card(s) abnormal
```

Alarm Level

No alarm condition. The message is informational only.

Procedure

1. Enter the following command to determine which ACMs are out of service:

rept-stat-slan

Following is an example of the output:

```
tekelecstp 00-04-23 13:36:07 EST EAGLE 5 ISS 35.0.0
SLAN Subsystem Report  IS-ANR         Active     -----
SLAN Cards Configured= 2      Cards IS-NR= 2
CARD   VERSION      PST            SST       AST    HOST Cap.  EAGLE Cap.
------------------------------------------------------------------------
1206   021-010-000  IS-NR          Active    ----       42%         16%
1104   021-010-000  IS-NR          Active    ALMINH     36%         12%
------------------------------------------------------------------------
AVERAGE USAGE per HOST CAPACITY  =  39%
AVERAGE USAGE per EAGLE CAPACITY =  14%
CARDS DENIED SLAN SEVICE:
  1101, 1204

Command Completed
```

2. Use the *init-card* command to reinitialize any cards OOS-MT.

3. Use the *rept-stat-slan* command again to determine if the card(s) have returned to IS-NR. If not, reseat the card(s).

4. If any card(s) remain OOS-MT, replace the card(s).

NOTE: See Appendix A for procedure on replacing cards.

0152 - LIM(s) have been denied STPLAN service

Description

This message indicates that a link interface module (LIM) has been denied STPLAN service and cannot send messages to an application communication module (ACM) due to underprovisioning. More ACMs are required. There should be approximately one ACM for 30-32 LIMs. However, this ratio depends upon the traffic load.

Example

```
     RLGHNCXA21W 00-12-07 11:02:30 EST  EAGLE 35.0.0
**   0100.0152 ** SLAN SYSTEM   LIM(s) have been denied STPLAN service
```

Alarm Level

Major

Procedure

1. Use the *rept-stat-slan* command to determine which LIMs have been denied STPLAN service.

   NOTE: Make sure the problem persists. Adding new LIM cards can cause this condition temporarily.

2. Add ACMs one at a time. Monitor the performance of the STPLAN subsystem with the *rept-stat-slan* command to determine if additional cards are needed.

0153 - STPLAN not available

Description

This message indicates that no application communication modules (ACMs) are in service.

Example

```
           RLGHNCXA21W 00-12-07 11:02:30 EST  EAGLE 35.0.0
      *C   0100.0153 *C SLAN SYSTEM      STPLAN not available
```

Alarm Level

Critical

Procedure

1. To determine the status of the ACMs, enter:

rept-stat-slan

Following is an example of the output:

```
tekelecstp 00-04-23 13:36:07 EST EAGLE 35.0.0
SLAN Subsystem Report  IS-ANR         Active     -----
SLAN Cards Configured= 2      Cards IS-NR= 2
CARD   VERSION      PST            SST       AST    HOST Cap.  EAGLE Cap.
------------------------------------------------------------------------
1206   021-010-000  IS-NR          Active    ----       42%         16%
1104   021-010-000  IS-NR          Active    ALMINH     36%         12%
------------------------------------------------------------------------
AVERAGE USAGE per HOST CAPACITY  =  39%
AVERAGE USAGE per EAGLE CAPACITY =  14%
CARDS DENIED SLAN SEVICE:
  1101, 1204

Command Completed
```

2. Use the *init-card* command to reinitialize any cards OOS-MT.

3. Enter the following command to determine if the card(s) have returned to IS-NR. If not, reseat the card(s).

rept-stat-slan

4. If any card(s) remain OOS-MT, replace the card(s).

NOTE: See Appendix A for procedure on replacing cards.

0154 - STPLAN is removed

Description

This message indicates that the last application communication module (ACM) has been deleted from the database by the user. The STPLAN service is no longer available.

Example

```
RLGHNCXA21W 00-12-07 12:01:43 EST  EAGLE 35.0.0
0014.0154    SLAN SYSTEM      STPLAN is removed
```

Alarm Level

No alarm condition. The message is informational only.

Procedure

1. This message is the result of database administration, and does not indicate an alarm condition.

NOTE: Confirm that the STPLAN removal was intentional.

0155 - STPLAN connection unavailable

Description

This message indicates that the TCP/IP connection to the remote host is lost. The physical connection may be faulty or the remote host is not accepting a TCP/IP connection.

Example

```
      RLGHNCXA21W 00-12-07 12:01:43 EST  EAGLE 35.0.0
*     0014.0155  * DLK 1104,A STPLAN     STPLAN connection unavailable
```

Alarm Level

Minor

Procedure

1. Determine if the reported card is out of service using the *rept-stat-card* command. If card is not OOS-MT, proceed to step 3.

2. If card is OOS-MT, do the following, using the *rept-stat-card* command to check for card IS-NR state after each action:

   a. Reinitialize card using the *init-card* command.

   b. Reseat the card.

   c. Replace the card.

   NOTE: See Appendix A for procedures on replacing cards.

3. Use the *rtrv-ip-node* command to identify the address and node of the remote host.

4. Use the *tst-dlk* command to test the TCP/IP connection.

5. If the *tst-dlk* test passes, check that the proper port designation is set at the remote host.

6. If *tst-dlk* fails, perform the following checks:

   a. Check the remote host hardware and software.

   b. Use your company procedures to check the network.

c. Check cable connections at the system and at the remote host.

---

7. If the fault is not cleared, call Tekelec Technical Services at the appropriate number.

Reference: “Customer Care Center” on page 1-13

0156 - STPLAN connection available

Description

This message indicates that the TCP/IP connection to the host is established. All failures have been cleared.

Example

```
RLGHNCXA21W 00-12-07 12:01:43 EST  EAGLE 35.0.0
0014.0156    DLK 1104,A STPLAN      STPLAN connection available
```

Alarm Level

No alarm condition. The message is informational only.

Procedure

1. This message indicates that a previous failure has been cleared. No further action is necessary.

0157 - X25 logical channels available

Description

This message indicates that X.25 logical channels are available. An “X25 no logical channels available” condition (message number 0158) has been cleared.

Example

```
RLGHNCXA21W 00-12-07 12:01:43 EST  EAGLE 35.0.0
0014.0157    SLK 1104,A LSA01      X25 logical channels available
             SLC=01   FECLLI=A1234567890
```

Alarm Level

No alarm condition. The message is informational only.

Procedure

1. This message indicates that an “X25 no logical channels available” condition has been cleared. No further action is necessary.

0158 - X25 no logical channels available

Description

This message indicates that no X.25 logical channels are available to make an outgoing call. This condition occurs when the combination of incoming (end user- initiated) and outgoing (system-initiated) calls exceed the total number of SVCs configured for the link.

Example

```
      RLGHNCXA21W 00-12-07 12:01:43 EST  EAGLE 35.0.0
*     0014.0158  * SLK 1104,A LSA01    X25 no logical channels available
                   SLC=01   FECLLI=A1234567890
```

Alarm Level

Minor

Procedure

1. Correct any under-provisioning of a link or correct condition of excessive calls from user end of the network. Link provisioning changes must take place at both ends of the X.25 link.

2. At the EAGLE 5 ISS end of the X.25 link, use the *chg-x25-slk* command to change the number of SVCs configured.

0159 - High Speed Clocks A and B for card normal

Description

The High Speed A and B clock sources for the indicated card are now functioning normally.

Example

```
station1234 99-03-05 16:28:08 EST  EAGLE 35.0.0
0053.0147    CARD 1115 OAM   High Speed Clocks A and B for card normal
```

Alarm Level

No alarm condition. The message is informational only.

Procedure

1. This message indicates a previous fault has been corrected. No further action is necessary.

0160 - 1116-S clock failed

Description

This message indicates the secondary BITS clock failed on the TDM card in slot 1116.

Example

```
           RLGHNCXA21W 00-12-07 12:01:43 EST  EAGLE 35.0.0
     *     0014.0160  * CLOCK SYSTEM    1116-S clock failed
```

Alarm Level

Minor

Procedure

1. Use the *rept-stat-clk* command to determine the current clock status. Following is an example of the output:

```
tekelecstp 00-04-23  13:34:15 EST  EAGLE 35.0.0
CARD LOC= 1114 (Active   )    CARD LOC= 1116 (Isolated )
PRIMARY BITS   = Active       PRIMARY BITS   = -----
SECONDARY BITS = Idle         SECONDARY BITS = -----
                              PST           SST       AST
SYSTEM CLOCK                  IS-NR         ACTIVE    ALMINH
# Cards using CLK A = 9     # Cards with bad CLK A = 0
# Cards using CLK B = 0     # Cards with bad CLK B = 9
# Cards using CLK I = 0
Command Completed
```

2. The primary BITS clock should be active. Reseat the TDM card in slot 1116.

3. If the problem persists, replace the TDM card using the card replacement procedures in Appendix A.

0161 - 1116-P clock failed

Description

This message indicates that the primary clock on the TDM card in slot 1116 failed.

Example

```
     RLGHNCXA21W 00-12-07 12:01:43 EST  EAGLE 35.0.0
*    0014.0161  * CLOCK SYSTEM    1116-P clock failed
```

Alarm Level

Minor

Procedure

1. Use the *rept-stat-clk* command to determine the current clock configuration. Following is an example of the output:

```
tekelecstp 00-04-23  13:34:15 EST  EAGLE 35.0.0
CARD LOC= 1114 (Standby  )    CARD LOC= 1116 (Active )
PRIMARY BITS   = Idle       PRIMARY BITS   = Fault
SECONDARY BITS = Active     SECONDARY BITS = Active
                              PST           SST       AST
SYSTEM CLOCK                  IS-NR         Idle      ------
# Cards using CLK A = 0     # Cards with bad CLK A = 0
# Cards using CLK B = 8     # Cards with bad CLK B = 0
# Cards using CLK I = 0
Command Completed
```

2. The system automatically reverts from the primary to secondary BITS if the primary clock fails. Reseat the TDM card in slot 1116.

3. If the problem persists, replace the TDM card in slot 1116 using the card replacement procedures in Appendix A.

0162 - 1116-P, 1116-S clocks failed

Description

This message indicates that both BITS clocks have failed on the TDM card located in slot 1116.

Example

```
     RLGHNCXA21W 00-12-07 12:01:43 EST  EAGLE 35.0.0
**   0014.0162  ** CLOCK SYSTEM    1116-P, 1116-S clocks failed
```

Alarm Level

Major

Procedure

1. Use the *rept-stat-clk* command to determine the current clock configuration. Following is an example of the output:

```
tekelecstp 00-04-23  13:34:15 EST  EAGLE 35.0.0
CARD LOC= 1114 (Standby  )    CARD LOC= 1116 (Active )
PRIMARY BITS   = ------       PRIMARY BITS   = Fault
SECONDARY BITS = ------       SECONDARY BITS = Fault
                              PST           SST       AST
SYSTEM CLOCK                  IS-NR         Idle      ------
# Cards using CLK A = 0     # Cards with bad CLK A = 8
# Cards using CLK B = 0     # Cards with bad CLK B = 8
# Cards using CLK I = 8
Command Completed
```

2. Reseat the TDM card in slot 1116.

3. If the problem persists, replace the TDM card in slot 1116 using the card replacement procedures in Appendix A.

0163 - 1114-S clock failed

Description

This message indicates the secondary BITS clock for the TDM card in slot 1114 has failed.

Example

```
    RLGHNCXA21W 00-12-07 12:01:43 EST  EAGLE 35.0.0
*   0014.0163  * CLOCK SYSTEM    1114-S clock failed
```

Alarm Level

Minor

Procedure

1. Use the *rept-stat-clk* command to determine the current clock configuration. Following is an example of the output:

```
tekelecstp 00-04-23  13:34:15 EST  EAGLE 35.0.0
CARD LOC= 1114 (Active   )    CARD LOC= 1116 (Isolated )
PRIMARY BITS   = Active       PRIMARY BITS   = Fault
SECONDARY BITS = Fault        SECONDARY BITS = Fault
                              PST           SST       AST
SYSTEM CLOCK                  IS-NR         ACTIVE    ALMINH
# Cards using CLK A = 9     # Cards with bad CLK A = 0
# Cards using CLK B = 0     # Cards with bad CLK B = 9
# Cards using CLK I = 0
Command Completed
```

2. The primary BITS clock should be active. Reseat the TDM card in slot 1114.

3. If the problem persists, replace the TDM card in slot 1114 using the card replacement procedures in Appendix A.

0164 - 1114-S, 1116-S clocks failed

Description

This message indicates the secondary BITS clock source has failed on both the active and standby TDM cards.

Example

```
     RLGHNCXA21W 00-12-07 12:01:43 EST  EAGLE 35.0.0
**   0014.0164  ** CLOCK SYSTEM    1114-S, 1116-S clocks failed
```

Alarm Level

Major

Procedure

1. Use the *rept-stat-clk* command to determine the current clock status. Following is an example of the output:

```
tekelecstp 00-04-23  13:34:15 EST  EAGLE 35.0.0
CARD LOC= 1114 (Isolated )   CARD LOC= 1116 (Active )
PRIMARY BITS   = Fault       PRIMARY BITS   = Active
SECONDARY BITS = Fault       SECONDARY BITS = Fault
                               PST           SST       AST
SYSTEM CLOCK                   IS-NR         ACTIVE    ALMINH
# Cards using CLK A = 9     # Cards with bad CLK A = 0
# Cards using CLK B = 0     # Cards with bad CLK B = 9
# Cards using CLK I = 0
Command Completed
```

2. Follow local procedures to troubleshoot and repair the secondary BITS clock.

3. If this message appears again, call Tekelec Technical Services at the appropriate number.

Reference: “Customer Care Center” on page 1-13

0165 - 1114-S, 1116-P clocks failed

Description

This message indicates the secondary BITS clock on the TDM card in slot 1114, and the primary BITS clock on the TDM card in slot 1116 have failed.

Example

```
     RLGHNCXA21W 00-12-07 12:01:43 EST  EAGLE 35.0.0
*    0014.0165  * CLOCK SYSTEM    1114-S, 1116-P clocks failed
```

Alarm Level

Minor

Procedure

1. Use the *rept-stat-clk* command to determine the current clock configuration. Following is an example of the output:

```
tekelecstp 00-04-23  13:34:15 EST  EAGLE 35.0.0
CARD LOC= 1114 (Isolated )    CARD LOC= 1116 (Active )
PRIMARY BITS   = Fault        PRIMARY BITS   = Fault
SECONDARY BITS = Fault        SECONDARY BITS = Active
                              PST           SST       AST
SYSTEM CLOCK                  IS-NR         ACTIVE    ALMINH
# Cards using CLK A = 9     # Cards with bad CLK A = 0
# Cards using CLK B = 0     # Cards with bad CLK B = 9
# Cards using CLK I = 0
Command Completed
```

2. Follow local procedures to troubleshoot and repair the BITS clock.

3. If one of the reference clocks is still not functioning, replace the TDM card(s) using the card replacement procedures in Appendix A.

4. If this message appears again, call Tekelec Technical Services at the appropriate number.

Reference: “Customer Care Center” on page 1-13

0166 - 1114-S, 1116-P, 1116-S clocks failed

Description

This message indicates the following clocks failed:

- The secondary clock on the TDM card in slot 1114
- The primary clock on the TDM card in slot 1116
- The secondary clock on the TDM card in slot 1116

Example

```
     RLGHNCXA21W 00-12-07 12:01:43 EST  EAGLE 35.0.0
**   0014.0166  ** CLOCK SYSTEM    1114-S, 1116-P, 1116-S clocks failed
```

Alarm Level

Major

Procedure

1. Use the *rept-stat-clk* command to determine the current clock configuration. Following is an example of the output:

```
tekelecstp 00-04-23  13:34:15 EST  EAGLE 35.0.0
CARD LOC= 1114 (Active   )    CARD LOC= 1116 (Isolated )
PRIMARY BITS   = Active       PRIMARY BITS   = Fault
SECONDARY BITS = Fault        SECONDARY BITS = Fault
                              PST           SST       AST
SYSTEM CLOCK                  IS-NR         ACTIVE    ALMINH
# Cards using CLK A = 9     # Cards with bad CLK A = 0
# Cards using CLK B = 0     # Cards with bad CLK B = 9
# Cards using CLK I = 0
Command Completed
```

2. Follow local procedures to troubleshoot and repair the BITS clock.

3. If one of the reference clocks is still not functioning, replace the TDM card(s) using the card replacement procedures in Appendix A.

0167 - 1114-P clock failed

Description

This message indicates the primary BITS clock on the TDM card in slot 1114 has failed.

Example

```
   RLGHNCXA21W 00-12-07 12:01:43 EST  EAGLE 35.0.0
*  0014.0167  * CLOCK SYSTEM    1114-P clock failed
```

Alarm Level

Minor

Procedure

1. Use the *rept-stat-clk* command to determine the current clock configuration. Following is an example of the output:

```
tekelecstp 00-04-23  13:34:15 EST  EAGLE 35.0.0
CARD LOC= 1114 (Isolated  )   CARD LOC= 1116 (Active )
PRIMARY BITS   = Fault        PRIMARY BITS   = Active
SECONDARY BITS = Fault        SECONDARY BITS = Fault
                              PST           SST       AST
SYSTEM CLOCK                  IS-NR         ACTIVE    ALMINH
# Cards using CLK A = 9     # Cards with bad CLK A = 0
# Cards using CLK B = 0     # Cards with bad CLK B = 9
# Cards using CLK I = 0
Command Completed
```

2. Follow local procedures to troubleshoot and repair the BITS clock.

3. If the reference clock is still not functioning, replace the TDM card using the card replacement procedures in Appendix A.

0168 - 1114-P, 1116-S clocks failed

Description

This message indicates the primary BITS clock on the TDM card in slot 1114, and the secondary BITS clock on the TDM card in slot 1116 have failed.

Example

```
   RLGHNCXA21W 00-12-07 12:01:43 EST  EAGLE 35.0.0
*  0014.0168  * CLOCK SYSTEM    1114-P, 1116-S clocks failed
```

Alarm Level

Minor

Procedure

1. Use the *rept-stat-clk* command to determine the current clock configuration. Following is an example of the output:

```
tekelecstp 00-04-23  13:34:15 EST  EAGLE 35.0.0
CARD LOC= 1114 (Isolated)    CARD LOC= 1116 (Active )
PRIMARY BITS   = Fault       PRIMARY BITS   = Active
SECONDARY BITS = Fault        SECONDARY BITS = Fault
                              PST           SST       AST
SYSTEM CLOCK                  IS-NR         ACTIVE    ALMINH
# Cards using CLK A = 9     # Cards with bad CLK A = 0
# Cards using CLK B = 0     # Cards with bad CLK B = 9
# Cards using CLK I = 0
Command Completed
```

2. Follow local procedures to troubleshoot and repair the BITS clock.

3. If one of the reference clocks is still not functioning, reseat the associated TDM card. Make sure the system clock reference is active on the other TDM card.

4. If one of the reference clocks is still not functioning, replace the TDM card using the card replacement procedures in Appendix A.

0169 - 1114-P, 1116-P clocks failed

Description

This message indicates the primary BITS clock on the TDM cards in slots 1114 and slot 1116 have failed.

Example

```
     RLGHNCXA21W 00-12-07 12:01:43 EST  EAGLE 35.0.0
**   0014.0169  ** CLOCK SYSTEM    1114-P, 1116-P clocks failed
```

Alarm Level

Major

Procedure

1. Use the *rept-stat-clk* command to determine the current clock configuration. Following is an example of the output:

```
tekelecstp 00-04-23  13:34:15 EST  EAGLE 35.0.0
CARD LOC= 1114 (Isolated )    CARD LOC= 1116 (Active )
PRIMARY BITS   = Fault        PRIMARY BITS   = Fault
SECONDARY BITS = Fault        SECONDARY BITS = Active
                              PST           SST       AST
SYSTEM CLOCK                  IS-NR         ACTIVE    ALMINH
# Cards using CLK A = 9     # Cards with bad CLK A = 0
# Cards using CLK B = 0     # Cards with bad CLK B = 9
# Cards using CLK I = 0
Command Completed
```

2. Follow local procedures to troubleshoot and repair the BITS clock.

3. If one of the reference clocks is still not functioning, reseat the associated TDM card. Make sure the system clock reference is active on the other TDM card.

4. If one of the reference clocks is still not functioning, replace the TDM card using the card replacement procedures in Appendix A.

0170 - 1114-P, 1116-P, 1116-S clocks failed

Description

This message indicates the following clocks failed:

- The primary clock on the TDM card in slot 1114
- The primary clock on the TDM card in slot 1116
- The secondary clock on the TDM card in slot 1116

Example

```
     RLGHNCXA21W 00-12-07 12:01:43 EST  EAGLE 35.0.0
**   0014.0170  ** CLOCK SYSTEM    1114-P, 1116-P, 1116-S clocks failed
```

Alarm Level

Major

Procedure

1. Use the *rept-stat-clk* command to determine the current clock configuration. Following is an example of the output:

```
tekelecstp 00-04-23  13:34:15 EST  EAGLE 35.0.0
CARD LOC= 1114 (Standby )     CARD LOC= 1116 (Isolated )
PRIMARY BITS   = ------       PRIMARY BITS   = Fault
SECONDARY BITS = ------       SECONDARY BITS = Active
                              PST           SST       AST
SYSTEM CLOCK                  IS-NR         ACTIVE    ALMINH
# Cards using CLK A = 9     # Cards with bad CLK A = 0
# Cards using CLK B = 0     # Cards with bad CLK B = 9
# Cards using CLK I = 0
Command Completed
```

2. Follow local procedures to troubleshoot and repair the BITS clock.

3. If one of the reference clocks is still not functioning, reseat the associated TDM card. Make sure the system clock reference is active on the other TDM card.

4. If one of the reference clocks is still not functioning, replace the TDM card using the card replacement procedures in Appendix A.

0171 - 1114-P, 1114-S clocks failed

Description

This message indicates the primary and secondary BITS clocks on the TDM card in slot 1114 have failed.

Example

```
     RLGHNCXA21W 00-12-07 12:01:43 EST  EAGLE 35.0.0
**   0014.0171  ** CLOCK SYSTEM    1114-P, 1114-S clocks failed
```

Alarm Level

Major

Procedure

1. Use the *rept-stat-clk* command to determine the current clock configuration. Following is an example of the output:

```
tekelecstp 00-04-23  13:34:15 EST  EAGLE 35.0.0
CARD LOC= 1114 (Isolated )    CARD LOC= 1116 (Active )
PRIMARY BITS   = Fault        PRIMARY BITS   = Fault
SECONDARY BITS = Fault        SECONDARY BITS = Active
                              PST           SST       AST
SYSTEM CLOCK                  IS-NR         ACTIVE    ALMINH
# Cards using CLK A = 9     # Cards with bad CLK A = 0
# Cards using CLK B = 0     # Cards with bad CLK B = 9
# Cards using CLK I = 0
Command Completed
```

2. Follow local procedures to troubleshoot and repair the BITS clock.

3. If one of the reference clocks is still not functioning, reseat the associated TDM card. Make sure the system clock reference is active on the other TDM card.

4. If one of the reference clocks is still not functioning, replace the TDM card using the card replacement procedures in Appendix A.

0172 - 1114-P, 1114-S, 1116-S clocks failed

Description

This message indicates the following clocks failed:

- The primary clock on the TDM card in slot 1114
- The secondary clock on the TDM card in slot 1114
- The secondary clock on the TDM card in slot 1116

Example

```
     RLGHNCXA21W 00-12-07 12:01:43 EST  EAGLE 35.0.0
**   0014.0172  ** CLOCK SYSTEM    1114-P, 1114-S, 1116-S clocks failed
```

Alarm Level

Major

Procedure

1. Use the *rept-stat-clk* command to determine the current clock configuration. Following is an example of the output:

```
tekelecstp 00-04-23  13:34:15 EST  EAGLE 35.0.0
CARD LOC= 1114 (Isolated )    CARD LOC= 1116 (Isolated )
PRIMARY BITS   = Fault       PRIMARY BITS   = Fault
SECONDARY BITS = Fault        SECONDARY BITS = Active
                              PST           SST       AST
SYSTEM CLOCK                  IS-NR         ACTIVE    ALMINH
# Cards using CLK A = 9     # Cards with bad CLK A = 0
# Cards using CLK B = 0     # Cards with bad CLK B = 9
# Cards using CLK I = 0
Command Completed
```

2. Follow local procedures to troubleshoot and repair the secondary BITS clock.

3. If one of the reference clocks is still not functioning, reseat that TDM card.

4. If one of the reference clocks is still not functioning, replace the TDM card using the card replacement procedures in Appendix A.

0173 - 1114-P, 1114-S, 1116-P clocks failed

Description

This message indicates the following clocks failed:

- The primary clock on the TDM card in slot 1114
- The secondary clock on the TDM card in slot 1114
- The primary clock on the TDM card in slot 1116

Example

```
     RLGHNCXA21W 00-12-07 12:01:43 EST  EAGLE 35.0.0
**   0014.0173  ** CLOCK SYSTEM    1114-P, 1114-S, 1116-P clocks failed
```

Alarm Level

Major

Procedure

1. Use the *rept-stat-clk* command to determine the current clock configuration. Following is an example of the output:

```
tekelecstp 00-04-23  13:34:15 EST  EAGLE 35.0.0
CARD LOC= 1114 (Isolated )    CARD LOC= 1116 (Active )
PRIMARY BITS   = Fault        PRIMARY BITS   = Fault
SECONDARY BITS = Fault        SECONDARY BITS = Active
                              PST           SST       AST
SYSTEM CLOCK                  IS-NR         ACTIVE    ALMINH
# Cards using CLK A = 9     # Cards with bad CLK A = 0
# Cards using CLK B = 0     # Cards with bad CLK B = 9
# Cards using CLK I = 0
Command Completed
```

2. Follow local procedures to troubleshoot and repair the primary BITS clock.

3. If one of the reference clocks is still not functioning, reseat the associated TDM card.

4. If one of the reference clocks is still not functioning, replace the associated TDM card using the card replacement procedures in Appendix A.

0174 - %full threshold reached -upload required

Description

This alarm is part of the Security Logging feature. When the security log reaches a threshold (administered by the *chg-attr-seculog* command), this alarm is raised. If the system detects that the percent full condition of new entries has reached the threshold, this alarm is raised to alert the system administrator that the security log must be uploaded to avoid an overflow condition. If the log is not uploaded before the log is completely full, entries will be lost. When the security log is uploaded, the alarm is lowered.

Example

```
     RLGHNCXA21W 00-12-07 12:01:43 EST  EAGLE 35.0.0
*    0014.0174    *SECULOG 1114  %full threshold reached - upload required
```

Alarm Level

Minor

Procedure

NOTE: This alarm appears only on the security administrator terminal.

1. To clear this alarm, you must copy the security log to the file transfer area (FTA) in the system. To do this, enter the *copy-seculog* command.

2. From the file transfer area, you can use the *act-file-trns* command to transfer the file to a remote PC. Follow local procedures for transferring and storing security logs.

0175 - LOGBUFROVFL-SECULOG - upload required

Description

This alarm is part of the Security Logging feature. When the security log reaches a threshold (administered by the *chg-attr-seculog* command) UAM 174 is raised. When the log fills completely, new entries are lost and this alarm is raised. When the security log is uploaded, this alarm is lowered.

Example

```
     RLGHNCXA21W 00-12-07 12:01:43 EST  EAGLE 35.0.0
*    0014.0175    *SECULOG 1114  LOGBUFROVFL-SECULOG - upload required
```

Alarm Level

Minor

Procedure

NOTE: This alarm appears only on the security administrator terminal.

1. To clear this alarm, you must copy the security log to the file transfer area (FTA) in the system. To do this, enter the *copy-seculog* command.

2. From the file transfer area, you can use the *act-file-trns* command to transfer the file to a remote PC. Follow local procedures for transferring and storing security logs.

0176 - Stdby security log - upload required

Description

This alarm is part of the Security Logging feature. All of the security log entries should be written to the active MASP and none to the standby MASP. However, should a problem occur and the standby MASP switches to active, the security logs are split between the two MASPs. If there are any new log entries on the standby MASP, the standby log should be uploaded.

Example

```
      RLGHNCXA21W 00-12-07 12:01:43 EST  EAGLE 35.0.0
*     0014.0176    *SECULOG 1116  Stdby security log - upload required
```

Alarm Level

Minor

Procedure

NOTE: This alarm appears only on the security administrator terminal.

1. Enter the following command to clear this alarm and copy the security log to the file transfer area (FTA) in the system:

   copy-seculog:slog=stb

0177 - Security log exception cleared

Description

This alarm is part of the Security Logging feature and indicates that a previous alarm has been cleared by doing one of the following:

- uploading the security log to the file transfer area
- turning off the security logging feature
- raising the threshold for the number of log entries that will generate UAM 174

Example

```
RLGHNCXA21W 00-12-07 12:01:43 EST  EAGLE 35.0.0
0014.0177     SECULOG 1114           Security log exception cleared
```

Alarm Level

No alarm condition. The message is informational only.

Procedure

NOTE: This alarm appears only on the security administrator terminal.

1. This message indicates a previous fault has been corrected. No further action is necessary.

0178 - Security log failed

Description

This alarm is part of the Security Logging feature and indicates that a command could not be recorded in the security log.

Example

```
RLGHNCXA21W 00-12-07 12:01:43 EST  EAGLE 35.0.0
0014.0178      SECULOG 1114       Security log failed
```

Alarm Level

No alarm condition. The message is informational only.

Procedure

NOTE: This alarm appears only on the security administrator terminal.

1. This message indicates a logging failure has occurred. If the problem persists, check for other alarms, such as a disk failure, and troubleshoot that alarm.

0179 - NDC Q.3 association is unavailable

Description

The NDC (network data collection) association is established and maintained by the NDC manager. Under some conditions, the NDC agent will drop the NDC association. Typically the conditions that cause this alarm are accompanied by their own additional alarms (such as UAM 0084, “IP connection unavailable”).

Example

```
      station1234 99-03-30 16:28:08 EST  EAGLE 35.0.0
 * *   0014.0179    EMAP       NDC Q.3 association is unavailable
```

Alarm Level

Major

Procedure

1. If association loss is accompanied by UAM 0084, “IP connection unavailable,” consult corrective action for that UAM (see “0084 - IP Connection Unavailable” on page 3-170 for details).

2. If no other alarms are generated with this alarm, check the EMAP network event log for unusual network activity.

3. Check the NDC manager for normal operation or association status.

4. If the above steps do not clear the fault, call Tekelec Technical Services at the appropriate number.

   Reference: “Customer Care Center” on page 1-13

0180 - NDC Q.3 association is available

Description

This indicates that a previous NDC association loss is reestablished and functioning properly.

Example

```
station1234 99-03-30 16:28:08 EST  EAGLE 35.0.0
3535.0180    EMAP    NDC Q.3 association is available
```

Alarm Level

No alarm condition. The message is informational only.

Procedure

1. This message indicates a previous fault has been corrected. No further action is necessary.

0181 - NDC Subsystem is not available

Description

End-to-end connectivity between the system and the NDC Subsystem is down. The following conditions represent end-to-end loss of connectivity:

- Failure of both DCMs
- Failure of both DCM-to-EMAP links
- Failure of both EMAPs
- Failure of both IP links

Example

```
   station1234 99-03-30 16:28:08 EST  EAGLE 35.0.0
*C 3539.0181  *C   NDC SYSTEM         NDC Subsystem is not available
```

Alarm Level

Critical

Procedure

1. Check the physical connections between the EMAP and the NDC. Make sure the connectors are firmly seated.

2. Check the physical connections between the EMAP and the DCM cards on the system. Make sure the connectors are firmly seated.

3. Enter the following command to verify the status of the NDC:

rept-stat-ndc

A sample output follows:

```
;
RLGHNCXA3W 99-06-24 14:33:57 EST 35.0.0.0
    NDC SUBSYSTEM REPORT    OOS-MT         Fault      -----
    NDC Cards Configured= 2  Cards IS-NR= 2
    CARD   VERSION      TYPE      APPL       PST             SST     AST
  ------------------------------------------------------------------------------
    1215   219-009-000   DCM       EMDC       IS-NR         Active  -----
    DCM A IP CONNECTION                       IS-NR         Avail   -----
    EMAP A IP CONNECTION                      -----         -----   -----
    EMAP A NDC Agent                          -----         -----   -----

    EMAP A GPL version  = -----------
```

```
    1217   219-009-000   DCM      EMDC        IS-NR         Idle    -----
    DCM B IP CONNECTION                       IS-NR         Avail   -----
    EMAP B IP CONNECTION                      -----         -----   -----
    EMAP B NDC Agent                          -----         -----   -----

    EMAP B GPL version  = -----------

    EMAP  NDC Q3 Association                  -----         -----   -----
    DCM-DCM IP CONNECTION                     IS-NR         Avail   -----
    EMAP-EMAP Serial Connection               -----         -----   -----

    ALARM STATUS
    3538.0179  * EMAP           NDC Q.3 association is Unavailable
    3537.0084 ** EMAP A         IP Connection Unavailable
    3536.0084 ** EMAP B         IP Connection Unavailable
    3539.0181 *C NDC SYSTEM    NDC Subsystem is not available
    Command Completed.
;
```

Refer to the *Commands Manual* to interpret the output.

---

4. Using the output from Step 3, resolve the UAMs listed under ALARM STATUS using their respective UAM procedures.

---

5. If the problem is still not corrected, reseat the DCM card. If the EMAP still does not respond, replace the DCM card.

NOTE: See Appendix A, *Card Removal/Replacement Procedures* **for card replacement procedures.**

---

6. Enter the following command to verify the status of the NDC:

rept-stat-ndc

Refer to Step 3 for a sample output.

---

7. If the NDC is still not available, contact Tekelec Technical Services at the appropriate number.

Reference: “Customer Care Center” on page 1-13.

0182 - NDC Subsystem is available

Description

This indicates that the previously severed connection between the system and the NDC OS is now functioning properly.

Example

```
station1234 99-03-30 16:28:08 EST  EAGLE 35.0.0
3539.0182    NDC Subsystem    NDC Subsystem is available
```

Alarm Level

No alarm condition. The message is informational only.

Procedure

1. This message indicates a previous fault has been corrected. No further action is necessary.

0183 - 1116-SHS clock failed

Description

This message indicates that the secondary E1/T1 High Speed clock has failed for the TDM card located in slot 1116.

Example

```
     station1234 99-03-05 16:28:08 EST  EAGLE 35.0.0
*    0052.0183  * HS CLOCK SYSTEM  1116-SHS clock failed
```

Alarm Level

Minor

Procedure

1. Use the *rept-stat-clk* command to determine the current clock configuration. Following is an example of the output:

```
    rept-stat-clk
    Command entered at terminal #3.
;

    tekelecstp 99-03-05 13:34:15 EST EAGLE 35.0.0
    CARD LOC= 1114 (Active   )       CARD LOC= 1116 (Isolated )
    PRIMARY BITS      = Active        PRIMARY BITS      = -----
    SECONDARY BITS    = Idle          SECONDARY BITS    = -----
    HS PRIMARY CLK    = Active        HS PRIMARY CLK    = -----
    HS SECONDARY CLK  = Idle          HS SECONDARY CLK  = -----
    HS CLK TYPE       = E1 UNFRAMED   HS CLK TYPE       = -----
    HS CLK LINELEN    = SHORTHAUL     HS CLK LINELEN    = -----

                                      PST           SST       AST
    SYSTEM CLOCK                      IS-NR         ACTIVE    ALMINH
    ALARM STATUS     = No Alarms.
    # Cards using CLK A = 009         # Cards with bad CLK A = 000
    # Cards using CLK B = 000         # Cards with bad CLK B = 009
    # Cards using CLK I = 000

                                      PST           SST       AST
    HS SYSTEM CLOCK                   IS-NR         ACTIVE    ALMINH
    ALARM STATUS     = No Alarms.
    # Cards using HSCLK A = 001       # Cards with bad HSCLK A = 000
    # Cards using HSCLK B = 000       # Cards with bad HSCLK B = 002
    # Cards using HSCLK I = 000

    Command Completed.
;
```

2. Reseat the TDM card in slot 1116.

3. If the problem persists, replace the TDM card in slot 1116 using the card replacement procedures in Appendix A.

0184 - 1116-PHS clock failed

Description

This message indicates that the primary E1/T1 High Speed clock has failed for the TDM card located in slot 1116.

Example

```
     station1234 99-03-05 16:28:08 EST  EAGLE 35.0.0
*    0052.0184  * HS CLOCK SYSTEM  1116-PHS clock failed
```

Alarm Level

Minor

Procedure

1. Use the *rept-stat-clk* command to determine the current clock configuration. Following is an example of the output:

```
    rept-stat-clk
    Command entered at terminal #3.
;

    tekelecstp 99-03-05 13:34:15 EST EAGLE 35.0.0
    CARD LOC= 1114 (Active   )       CARD LOC= 1116 (Isolated )
    PRIMARY BITS      = Active        PRIMARY BITS      = -----
    SECONDARY BITS    = Idle          SECONDARY BITS    = -----
    HS PRIMARY CLK    = Active        HS PRIMARY CLK    = -----
    HS SECONDARY CLK  = Idle          HS SECONDARY CLK  = -----
    HS CLK TYPE       = E1 UNFRAMED   HS CLK TYPE       = -----
    HS CLK LINELEN    = SHORTHAUL     HS CLK LINELEN    = -----

                                      PST           SST       AST
    SYSTEM CLOCK                      IS-NR         ACTIVE    ALMINH
    ALARM STATUS     = No Alarms.
    # Cards using CLK A = 009         # Cards with bad CLK A = 000
    # Cards using CLK B = 000         # Cards with bad CLK B = 009
    # Cards using CLK I = 000

                                      PST           SST       AST
    HS SYSTEM CLOCK                   IS-NR         ACTIVE    ALMINH
    ALARM STATUS     = No Alarms.
    # Cards using HSCLK A = 001       # Cards with bad HSCLK A = 000
    # Cards using HSCLK B = 000       # Cards with bad HSCLK B = 002
    # Cards using HSCLK I = 000

    Command Completed.
;
```

2. Reseat the TDM card in slot 1116.

3. If the problem persists, replace the TDM card in slot 1116 using the card replacement procedures in Appendix A.

0185 - 1116-PHS, 1116-SHS clocks failed

Description

This message indicates that both E1/T1 High Speed clocks have failed for the TDM card located in slot 1116.

Example

```
     station1234 99-03-05 16:28:08 EST  EAGLE 35.0.0
**   0052.0185  ** HS CLOCK SYSTEM 1116-PHS, 1116-SHS clocks failed
```

Alarm Level

Major

Procedure

1. Use the *rept-stat-clk* command to determine the current clock configuration. Following is an example of the output:

```
    rept-stat-clk
    Command entered at terminal #3.
;

    tekelecstp 99-03-05 13:34:15 EST EAGLE 35.0.0
    CARD LOC= 1114 (Active   )       CARD LOC= 1116 (Isolated )
    PRIMARY BITS      = Active        PRIMARY BITS      = -----
    SECONDARY BITS    = Idle          SECONDARY BITS    = -----
    HS PRIMARY CLK    = Active        HS PRIMARY CLK    = -----
    HS SECONDARY CLK  = Idle          HS SECONDARY CLK  = -----
    HS CLK TYPE       = E1 UNFRAMED   HS CLK TYPE       = -----
    HS CLK LINELEN    = SHORTHAUL     HS CLK LINELEN    = -----

                                      PST           SST       AST
    SYSTEM CLOCK                      IS-NR         ACTIVE    ALMINH
    ALARM STATUS     = No Alarms.
    # Cards using CLK A = 009         # Cards with bad CLK A = 000
    # Cards using CLK B = 000         # Cards with bad CLK B = 009
    # Cards using CLK I = 000

                                      PST           SST       AST
    HS SYSTEM CLOCK                   IS-NR         ACTIVE    ALMINH
    ALARM STATUS     = No Alarms.
    # Cards using HSCLK A = 001       # Cards with bad HSCLK A = 000
    # Cards using HSCLK B = 000       # Cards with bad HSCLK B = 002
    # Cards using HSCLK I = 000

    Command Completed.
;
```

2. Reseat the TDM card in slot 1116.

3. If the problem persists, replace the TDM card in slot 1116 using the card replacement procedures in Appendix A.

0186 - 1114-SHS clock failed

Description

This message indicates that the secondary E1/T1 High Speed clock has failed for the TDM card located in slot 1114.

Example

```
     station1234 99-03-05 16:28:08 EST  EAGLE 35.0.0
*    0052.0186  * HS CLOCK SYSTEM  1114-SHS clock failed
```

Alarm Level

Minor

Procedure

1. Use the *rept-stat-clk* command to determine the current clock configuration. Following is an example of the output:

```
    rept-stat-clk
    Command entered at terminal #3.
;

    tekelecstp 99-03-05 13:34:15 EST EAGLE 35.0.0
    CARD LOC= 1114 (Active   )       CARD LOC= 1116 (Isolated )
    PRIMARY BITS      = Active        PRIMARY BITS      = -----
    SECONDARY BITS    = Idle          SECONDARY BITS    = -----
    HS PRIMARY CLK    = Active        HS PRIMARY CLK    = -----
    HS SECONDARY CLK  = Idle          HS SECONDARY CLK  = -----
    HS CLK TYPE       = E1 UNFRAMED   HS CLK TYPE       = -----
    HS CLK LINELEN    = SHORTHAUL     HS CLK LINELEN    = -----

                                      PST           SST       AST
    SYSTEM CLOCK                      IS-NR         ACTIVE    ALMINH
    ALARM STATUS     = No Alarms.
    # Cards using CLK A = 009         # Cards with bad CLK A = 000
    # Cards using CLK B = 000         # Cards with bad CLK B = 009
    # Cards using CLK I = 000

                                      PST           SST       AST
    HS SYSTEM CLOCK                   IS-NR         ACTIVE    ALMINH
    ALARM STATUS     = No Alarms.
    # Cards using HSCLK A = 001       # Cards with bad HSCLK A = 000
    # Cards using HSCLK B = 000       # Cards with bad HSCLK B = 002
    # Cards using HSCLK I = 000

    Command Completed.
;
```

2. Reseat the TDM card in slot 1114.

3. If the problem persists, replace the TDM card in slot 1114 using the card replacement procedures in Appendix A.

0187 - 1114-SHS, 1116-SHS clocks failed

Description

This message indicates the secondary E1/T1 High Speed clock source has failed for both the active and standby TDM cards.

Example

```
     station1234 99-03-05 16:28:08 EST  EAGLE 35.0.0
**   0052.0187  ** HS CLOCK SYSTEM 1114-SHS, 1116-SHS clocks failed
```

Alarm Level

Major

Procedure

1. Use the *rept-stat-clk* command to determine the current clock status. Following is an example of the output:

```
    rept-stat-clk
    Command entered at terminal #3.
;

    tekelecstp 99-03-05 13:34:15 EST EAGLE 35.0.0
    CARD LOC= 1114 (Active   )       CARD LOC= 1116 (Isolated )
    PRIMARY BITS      = Active        PRIMARY BITS      = -----
    SECONDARY BITS    = Idle          SECONDARY BITS    = -----
    HS PRIMARY CLK    = Active        HS PRIMARY CLK    = -----
    HS SECONDARY CLK  = Idle          HS SECONDARY CLK  = -----
    HS CLK TYPE       = E1 UNFRAMED   HS CLK TYPE       = -----
    HS CLK LINELEN    = SHORTHAUL     HS CLK LINELEN    = -----

                                      PST           SST       AST
    SYSTEM CLOCK                      IS-NR         ACTIVE    ALMINH
    ALARM STATUS     = No Alarms.
    # Cards using CLK A = 009         # Cards with bad CLK A = 000
    # Cards using CLK B = 000         # Cards with bad CLK B = 009
    # Cards using CLK I = 000

                                      PST           SST       AST
    HS SYSTEM CLOCK                   IS-NR         ACTIVE    ALMINH
    ALARM STATUS     = No Alarms.
    # Cards using HSCLK A = 001       # Cards with bad HSCLK A = 000
    # Cards using HSCLK B = 000       # Cards with bad HSCLK B = 002
    # Cards using HSCLK I = 000

    Command Completed.
;
```

2. Follow local procedures to troubleshoot and repair the secondary E1/T1 High Speed clock.

3. If this message appears again, call Tekelec Technical Services at the appropriate number.

   Reference: “Customer Care Center” on page 1-13

0188 - 1114-SHS, 1116-PHS clocks failed

Description

This message indicates the following High Speed clocks failed:

- The secondary High Speed clock for the TDM card in slot 1114
- The primary High Speed clock for the TDM card in slot 1116

Example

```
     station1234 99-03-05 16:28:08 EST  EAGLE 35.0.0
*    0052.0188  * HS CLOCK SYSTEM  1114-SHS, 1116-PHS clocks failed
```

Alarm Level

Minor

Procedure

1. Use the *rept-stat-clk* command to determine the current clock status. Following is an example of the output:

```
    rept-stat-clk
    Command entered at terminal #3.
;

    tekelecstp 99-03-05 13:34:15 EST EAGLE 35.0.0
    CARD LOC= 1114 (Active   )       CARD LOC= 1116 (Isolated )
    PRIMARY BITS      = Active        PRIMARY BITS      = -----
    SECONDARY BITS    = Idle          SECONDARY BITS    = -----
    HS PRIMARY CLK    = Active        HS PRIMARY CLK    = -----
    HS SECONDARY CLK  = Idle          HS SECONDARY CLK  = -----
    HS CLK TYPE       = E1 UNFRAMED   HS CLK TYPE       = -----
    HS CLK LINELEN    = SHORTHAUL     HS CLK LINELEN    = -----

                                      PST           SST       AST
    SYSTEM CLOCK                      IS-NR         ACTIVE    ALMINH
    ALARM STATUS     = No Alarms.
    # Cards using CLK A = 009         # Cards with bad CLK A = 000
    # Cards using CLK B = 000         # Cards with bad CLK B = 009
    # Cards using CLK I = 000

                                      PST           SST       AST
    HS SYSTEM CLOCK                   IS-NR         ACTIVE    ALMINH
    ALARM STATUS     = No Alarms.
    # Cards using HSCLK A = 001       # Cards with bad HSCLK A = 000
    # Cards using HSCLK B = 000       # Cards with bad HSCLK B = 002
    # Cards using HSCLK I = 000

    Command Completed.
;
```

2. Follow local procedures to troubleshoot and repair the E1/T1 High Speed clocks.

3. If this message appears again, call Tekelec Technical Services at the appropriate number.

   Reference: “Customer Care Center” on page 1-13

0189 - 1114-SHS, 1116-PHS,1116-SHS clocks failed

Description

This message indicates the following High Speed clocks failed:

- The secondary High Speed clock for the TDM card in slot 1114
- The primary High Speed clock for the TDM card in slot 1116
- The secondary High Speed clock for the TDM card in slot 1116

Example

```
   station1234 99-03-05 16:28:08 EST  EAGLE 35.0.0
**  0052.0189 ** HS CLOCK SYSTEM  1114-SHS, 1116-PHS,1116-SHS clocks failed
```

Alarm Level

Major

Procedure

1. Use the *rept-stat-clk* command to determine the current clock configuration. Following is an example of the output:

```
    rept-stat-clk
    Command entered at terminal #3.
;

    tekelecstp 99-03-05 13:34:15 EST EAGLE 35.0.0
    CARD LOC= 1114 (Active   )       CARD LOC= 1116 (Isolated )
    PRIMARY BITS      = Active        PRIMARY BITS      = -----
    SECONDARY BITS    = Idle          SECONDARY BITS    = -----
    HS PRIMARY CLK    = Active        HS PRIMARY CLK    = -----
    HS SECONDARY CLK  = Idle          HS SECONDARY CLK  = -----
    HS CLK TYPE       = E1 UNFRAMED   HS CLK TYPE       = -----
    HS CLK LINELEN    = SHORTHAUL     HS CLK LINELEN    = -----

                                      PST           SST       AST
    SYSTEM CLOCK                      IS-NR         ACTIVE    ALMINH
    ALARM STATUS     = No Alarms.
    # Cards using CLK A = 009         # Cards with bad CLK A = 000
    # Cards using CLK B = 000         # Cards with bad CLK B = 009
    # Cards using CLK I = 000

                                      PST           SST       AST
    HS SYSTEM CLOCK                   IS-NR         ACTIVE    ALMINH
    ALARM STATUS     = No Alarms.
    # Cards using HSCLK A = 001       # Cards with bad HSCLK A = 000
    # Cards using HSCLK B = 000       # Cards with bad HSCLK B = 002
    # Cards using HSCLK I = 000

    Command Completed.
```

2. Follow local procedures to troubleshoot and repair the E1/T1 High Speed clocks.

3. If one of the reference clocks is still not functioning, replace the TDM card(s) using the card replacement procedures in Appendix A.

0190 - 1114-PHS clock failed

Description

This message indicates the primary High Speed clock for the TDM card in slot 1114 has failed.

Example

```
   station1234 99-03-05 16:28:08 EST  EAGLE 35.0.0
 * 0052.0190  ** HS CLOCK SYSTEM 1114-PHS  clock failed
```

Alarm Level

Minor

Procedure

1. Use the *rept-stat-clk* command to determine the current clock configuration. Following is an example of the output:

```
    rept-stat-clk
    Command entered at terminal #3.
;

    tekelecstp 99-03-05 13:34:15 EST EAGLE 35.0.0
    CARD LOC= 1114 (Active   )       CARD LOC= 1116 (Isolated )
    PRIMARY BITS      = Active        PRIMARY BITS      = -----
    SECONDARY BITS    = Idle          SECONDARY BITS    = -----
    HS PRIMARY CLK    = Active        HS PRIMARY CLK    = -----
    HS SECONDARY CLK  = Idle          HS SECONDARY CLK  = -----
    HS CLK TYPE       = E1 UNFRAMED   HS CLK TYPE       = -----
    HS CLK LINELEN    = SHORTHAUL     HS CLK LINELEN    = -----

                                      PST           SST       AST
    SYSTEM CLOCK                      IS-NR         ACTIVE    ALMINH
    ALARM STATUS     = No Alarms.
    # Cards using CLK A = 009         # Cards with bad CLK A = 000
    # Cards using CLK B = 000         # Cards with bad CLK B = 009
    # Cards using CLK I = 000

                                      PST           SST       AST
    HS SYSTEM CLOCK                   IS-NR         ACTIVE    ALMINH
    ALARM STATUS     = No Alarms.
    # Cards using HSCLK A = 001       # Cards with bad HSCLK A = 000
    # Cards using HSCLK B = 000       # Cards with bad HSCLK B = 002
    # Cards using HSCLK I = 000

    Command Completed.
;
```

2. Follow local procedures to troubleshoot and repair the E1/T1 High Speed clock.

3. If the clock is still not functioning properly, replace the TDM card using the card replacement procedures in Appendix A.

0191 - 1114-PHS, 1116-SHS clocks failed

Description

This message indicates the following High Speed clocks failed:

- The primary High Speed clock for the TDM card in slot 1114
- The secondary High Speed clock for the TDM card in slot 1116

Example

```
     station1234 99-03-05 16:28:08 EST  EAGLE 35.0.0
*    0052.0191  * HS CLOCK SYSTEM  1114-PHS, 1116-SHS clocks failed
```

Alarm Level

Minor

Procedure

1. Use the *rept-stat-clk* command to determine the current clock status. Following is an example of the output:

```
    rept-stat-clk
    Command entered at terminal #3.
;

    tekelecstp 99-03-05 13:34:15 EST EAGLE 35.0.0
    CARD LOC= 1114 (Active   )       CARD LOC= 1116 (Isolated )
    PRIMARY BITS      = Active        PRIMARY BITS      = -----
    SECONDARY BITS    = Idle          SECONDARY BITS    = -----
    HS PRIMARY CLK    = Active        HS PRIMARY CLK    = -----
    HS SECONDARY CLK  = Idle          HS SECONDARY CLK  = -----
    HS CLK TYPE       = E1 UNFRAMED   HS CLK TYPE       = -----
    HS CLK LINELEN    = SHORTHAUL     HS CLK LINELEN    = -----

                                      PST           SST       AST
    SYSTEM CLOCK                      IS-NR         ACTIVE    ALMINH
    ALARM STATUS     = No Alarms.
    # Cards using CLK A = 009         # Cards with bad CLK A = 000
    # Cards using CLK B = 000         # Cards with bad CLK B = 009
    # Cards using CLK I = 000

                                      PST           SST       AST
    HS SYSTEM CLOCK                   IS-NR         ACTIVE    ALMINH
    ALARM STATUS     = No Alarms.
    # Cards using HSCLK A = 001       # Cards with bad HSCLK A = 000
    # Cards using HSCLK B = 000       # Cards with bad HSCLK B = 002
    # Cards using HSCLK I = 000

    Command Completed.
;
```

2. Follow local procedures to troubleshoot and repair the E1/T1 High Speed clocks.

3. If this message appears again, call Tekelec Technical Services at the appropriate number.

   Reference: “Customer Care Center” on page 1-13

0192 - 1114-PHS, 1116-PHS clocks failed

Description

This message indicates the primary E1/T1 High Speed clocks for the TDM cards in slots 1114 and 1116 have failed.

Example

```
     station1234 99-03-05 16:28:08 EST  EAGLE 35.0.0
**   0052.0192  ** HS CLOCK SYSTEM 1114-PHS, 1116-PHS clocks failed
```

Alarm Level

Major

Procedure

1. Use the *rept-stat-clk* command to determine the current clock configuration. Following is an example of the output:

```
    rept-stat-clk
    Command entered at terminal #3.
;

    tekelecstp 99-03-05 13:34:15 EST EAGLE 35.0.0
    CARD LOC= 1114 (Active   )       CARD LOC= 1116 (Isolated )
    PRIMARY BITS      = Active        PRIMARY BITS      = -----
    SECONDARY BITS    = Idle          SECONDARY BITS    = -----
    HS PRIMARY CLK    = Active        HS PRIMARY CLK    = -----
    HS SECONDARY CLK  = Idle          HS SECONDARY CLK  = -----
    HS CLK TYPE       = E1 UNFRAMED   HS CLK TYPE       = -----
    HS CLK LINELEN    = SHORTHAUL     HS CLK LINELEN    = -----

                                      PST           SST       AST
    SYSTEM CLOCK                      IS-NR         ACTIVE    ALMINH
    ALARM STATUS     = No Alarms.
    # Cards using CLK A = 009         # Cards with bad CLK A = 000
    # Cards using CLK B = 000         # Cards with bad CLK B = 009
    # Cards using CLK I = 000

                                      PST           SST       AST
    HS SYSTEM CLOCK                   IS-NR         ACTIVE    ALMINH
    ALARM STATUS     = No Alarms.
    # Cards using HSCLK A = 001       # Cards with bad HSCLK A = 000
    # Cards using HSCLK B = 000       # Cards with bad HSCLK B = 002
    # Cards using HSCLK I = 000

    Command Completed.
;
```

2. Follow local procedures to troubleshoot and repair the E1/T1 High Speed clocks.

---

3. If one of the reference clocks is still not functioning, reseat the associated TDM card. Make sure the system clock reference is active on the other TDM card.

---

4. If one of the reference clocks is still not functioning, replace the TDM card using the card replacement procedures in Appendix A.

0193 - 1114-PHS, 1116-PHS,1116-SHS clks failed

Description

This message indicates the following clocks failed:

- The primary High Speed clock for the TDM card in slot 1114
- The primary High Speed clock for the TDM card in slot 1116
- The secondary High Speed clock for the TDM card in slot 1116

Example

```
     station1234 99-03-05 16:28:08 EST  EAGLE 35.0.0
**  0052.0193 ** HS CLOCK SYSTEM  1114-PHS, 1116-PHS,1116-SHS clks failed
```

Alarm Level

Major

Procedure

1. Use the *rept-stat-clk* command to determine the current clock configuration. Following is an example of the output:

```
    rept-stat-clk
    Command entered at terminal #3.
;

    tekelecstp 99-03-05 13:34:15 EST EAGLE 35.0.0
    CARD LOC= 1114 (Active   )       CARD LOC= 1116 (Isolated )
    PRIMARY BITS      = Active        PRIMARY BITS      = -----
    SECONDARY BITS    = Idle          SECONDARY BITS    = -----
    HS PRIMARY CLK    = Active        HS PRIMARY CLK    = -----
    HS SECONDARY CLK  = Idle          HS SECONDARY CLK  = -----
    HS CLK TYPE       = E1 UNFRAMED   HS CLK TYPE       = -----
    HS CLK LINELEN    = SHORTHAUL     HS CLK LINELEN    = -----

                                      PST           SST       AST
    SYSTEM CLOCK                      IS-NR         ACTIVE    ALMINH
    ALARM STATUS     = No Alarms.
    # Cards using CLK A = 009         # Cards with bad CLK A = 000
    # Cards using CLK B = 000         # Cards with bad CLK B = 009
    # Cards using CLK I = 000

                                      PST           SST       AST
    HS SYSTEM CLOCK                   IS-NR         ACTIVE    ALMINH
    ALARM STATUS     = No Alarms.
    # Cards using HSCLK A = 001       # Cards with bad HSCLK A = 000
    # Cards using HSCLK B = 000       # Cards with bad HSCLK B = 002
    # Cards using HSCLK I = 000

    Command Completed.
```

2. Follow local procedures to troubleshoot and repair the E1/T1 High Speed clocks.

---

3. If one of the reference clocks is still not functioning, reseat the associated TDM card. Make sure the system clock reference is active on the other TDM card.

---

4. If one of the reference clocks is still not functioning, replace the TDM card using the card replacement procedures in Appendix A.

0194 - 1114-PHS, 1114-SHS clocks failed

Description

This message indicates the primary and secondary E1/T1 High Speed clocks for the TDM card in slot 1114 have failed.

Example

```
     station1234 99-03-05 16:28:08 EST  EAGLE 35.0.0
**   0052.0194  ** HS CLOCK SYSTEM 1114-PHS, 1114-SHS clocks failed
```

Alarm Level

Major

Procedure

1. Use the *rept-stat-clk* command to determine the current clock configuration. Following is an example of the output:

```
    rept-stat-clk
    Command entered at terminal #3.
;

    tekelecstp 99-03-05 13:34:15 EST EAGLE 35.0.0
    CARD LOC= 1114 (Active   )       CARD LOC= 1116 (Isolated )
    PRIMARY BITS      = Active        PRIMARY BITS      = -----
    SECONDARY BITS    = Idle          SECONDARY BITS    = -----
    HS PRIMARY CLK    = Active        HS PRIMARY CLK    = -----
    HS SECONDARY CLK  = Idle          HS SECONDARY CLK  = -----
    HS CLK TYPE       = E1 UNFRAMED   HS CLK TYPE       = -----
    HS CLK LINELEN    = SHORTHAUL     HS CLK LINELEN    = -----

                                      PST           SST       AST
    SYSTEM CLOCK                      IS-NR         ACTIVE    ALMINH
    ALARM STATUS     = No Alarms.
    # Cards using CLK A = 009         # Cards with bad CLK A = 000
    # Cards using CLK B = 000         # Cards with bad CLK B = 009
    # Cards using CLK I = 000

                                      PST           SST       AST
    HS SYSTEM CLOCK                   IS-NR         ACTIVE    ALMINH
    ALARM STATUS     = No Alarms.
    # Cards using HSCLK A = 001       # Cards with bad HSCLK A = 000
    # Cards using HSCLK B = 000       # Cards with bad HSCLK B = 002
    # Cards using HSCLK I = 000

    Command Completed.
;
```

2. Follow local procedures to troubleshoot and repair the E1/T1 High Speed clocks.

---

3. If one of the reference clocks is still not functioning, reseat the associated TDM card. Make sure the system clock reference is active on the other TDM card.

---

4. If one of the reference clocks is still not functioning, replace the TDM card using the card replacement procedures in Appendix A.

0195 - 1114-PHS, 1114-SHS,1116-SHS clks failed

Description

This message indicates the following clocks failed:

- The primary High Speed clock for the TDM card in slot 1114
- The secondary High Speed clock for the TDM card in slot 1114
- The secondary High Speed clock for the TDM card in slot 1116

Example

```
   station1234 99-03-05 16:28:08 EST  EAGLE 35.0.0
** 0052.0195  ** HS CLOCK SYSTEM 1114-PHS, 1114-SHS,1116-SHS clks failed
```

Alarm Level

Major

Procedure

1. Use the *rept-stat-clk* command to determine the current clock configuration. Following is an example of the output:

```
    rept-stat-clk
    Command entered at terminal #3.
;

    tekelecstp 99-03-05 13:34:15 EST EAGLE 35.0.0
    CARD LOC= 1114 (Active   )       CARD LOC= 1116 (Isolated )
    PRIMARY BITS      = Active        PRIMARY BITS      = -----
    SECONDARY BITS    = Idle          SECONDARY BITS    = -----
    HS PRIMARY CLK    = Active        HS PRIMARY CLK    = -----
    HS SECONDARY CLK  = Idle          HS SECONDARY CLK  = -----
    HS CLK TYPE       = E1 UNFRAMED   HS CLK TYPE       = -----
    HS CLK LINELEN    = SHORTHAUL     HS CLK LINELEN    = -----

                                      PST           SST       AST
    SYSTEM CLOCK                      IS-NR         ACTIVE    ALMINH
    ALARM STATUS     = No Alarms.
    # Cards using CLK A = 009         # Cards with bad CLK A = 000
    # Cards using CLK B = 000         # Cards with bad CLK B = 009
    # Cards using CLK I = 000

                                      PST           SST       AST
    HS SYSTEM CLOCK                   IS-NR         ACTIVE    ALMINH
    ALARM STATUS     = No Alarms.
    # Cards using HSCLK A = 001       # Cards with bad HSCLK A = 000
    # Cards using HSCLK B = 000       # Cards with bad HSCLK B = 002
    # Cards using HSCLK I = 000

    Command Completed.
```

2. Follow local procedures to troubleshoot and repair the secondary E1/T1 High Speed clock.

---

3. If one of the reference clocks is still not functioning, reseat that TDM card.

---

4. If one of the reference clocks is still not functioning, replace the TDM card using the card replacement procedures in Appendix A.

0196 - 1114-PHS, 1114-SHS,1116-PHS clks failed

Description

This message indicates the following clocks failed:

- The primary High Speed clock for the TDM card in slot 1114
- The secondary High Speed clock for the TDM card in slot 1114
- The primary High Speed clock for the TDM card in slot 1116

Example

```
     station1234 99-03-05 16:28:08 EST  EAGLE 35.0.0
**  0052.0196  ** HS CLOCK SYSTEM 1114-PHS, 1114-SHS,1116-PHS clks failed
```

Alarm Level

Major

Procedure

1. Use the *rept-stat-clk* command to determine the current clock configuration. Following is an example of the output:

```
    rept-stat-clk
    Command entered at terminal #3.
;

    tekelecstp 99-03-05 13:34:15 EST EAGLE 35.0.0
    CARD LOC= 1114 (Active   )       CARD LOC= 1116 (Isolated )
    PRIMARY BITS      = Active        PRIMARY BITS      = -----
    SECONDARY BITS    = Idle          SECONDARY BITS    = -----
    HS PRIMARY CLK    = Active        HS PRIMARY CLK    = -----
    HS SECONDARY CLK  = Idle          HS SECONDARY CLK  = -----
    HS CLK TYPE       = E1 UNFRAMED   HS CLK TYPE       = -----
    HS CLK LINELEN    = SHORTHAUL     HS CLK LINELEN    = -----

                                      PST           SST       AST
    SYSTEM CLOCK                      IS-NR         ACTIVE    ALMINH
    ALARM STATUS     = No Alarms.
    # Cards using CLK A = 009        # Cards with bad CLK A = 000
    # Cards using CLK B = 000        # Cards with bad CLK B = 009
    # Cards using CLK I = 000

                                      PST           SST       AST
    HS SYSTEM CLOCK                   IS-NR         ACTIVE    ALMINH
    ALARM STATUS     = No Alarms.
    # Cards using HSCLK A = 001      # Cards with bad HSCLK A = 000
    # Cards using HSCLK B = 000      # Cards with bad HSCLK B = 002
    # Cards using HSCLK I = 000

    Command Completed.
```

;

2. Follow local procedures to troubleshoot and repair the primary E1/T1 High Speed clock.

3. If one of the reference clocks is still not functioning, reseat the associated TDM card.

4. If one of the reference clocks is still not functioning, replace the associated TDM card using the card replacement procedures in Appendix A.

0197 - All high speed clocks have failed

Description

A fault has been detected on all high speed system clocks.

Example

```
      RLGHNCXA21W 00-12-07 11:02:30 EST  EAGLE 35.0.0
 *C   0100.0197 *C HS CLOCK SYSTEM  All high speed clocks have failed
```

Alarm Level

Critical

Procedure

1. Verify the status of the clock with the *rept-stat-clk* command. If both clocks are idle, check the source clock into the system. Follow local maintenance procedures to repair the source clock.

2. Verify the clock cables are connected to the shelf backplane (refer to the *Installation Manual* for cable location). If any cables are loose, reconnect the cable.

3. If the clock source is not at fault, try reseating the TDM cards.

4. If the message appears again, replace the TDM cards using the card replacement procedures in Appendix A.

5. If the fault still does not clear, call Tekelec Technical Services at the appropriate number.

   Reference: “Customer Care Center” on page 1-13

   NOTE: See Appendix A for procedures on replacing cards.

0198 - High speed clock alarm(s) cleared

Description

All primary and secondary high speed clock sources are functioning.

Example

```
RLGHNCXA21W 00-02-07 11:02:30 EST  EAGLE 35.0.0
0100.0198    HS CLOCK SYSTEM  High speed clock alarm(s) cleared
```

Alarm Level

No alarm condition. The message is informational only.

Procedure

1. This message indicates a previous fault has been corrected. No further action is necessary.

0199 - OA&M IP Security feature disabled

Description

The EAGLE 5 ISS OA&M IP Security Enhancements Feature is not operational. This UAM is issued because the temporary key for the QA&M IP Security feature has expired.

With this feature disabled, you do not have the tools to securely pass data across an otherwise non-secure network. Until the EAGLE 5 ISS OA&M IP Security Enhancements Feature is restored, the EAGLE 5 ISS cannot provide secure connections from approved clients, and does not protect sensitive passwords and information while in transit between the EAGLE 5 ISS and a host.

Example

```
RLGHNCXA21W 03-03-03 12:01:43 EST  EAGLE 35.0.0
0047.0199    SECURITY SYSTEM        OA&M IP Security feature disabled
```

Alarm Level

No alarm condition. The message is informational only.

Procedure

1. First, to restore OA&M IP Security Enhancements feature, you must enable it permanently. To enable a control feature, you can purchase it from Tekelec. You will receive a feature access key to use with the `enable-ctrl-feat` command.

2. Next, turn on the feature by using the `chg-ctrl-feat` command.

0200 - RCVRY-LKF: link available

Description

The link has become available for SS7 signaling traffic. SS7 traffic has been restored to the link.

Example

```
RLGHNCXA21W 00-12-07 12:01:43 EST  EAGLE 35.0.0
0014.0200  SLK 1202,A nc00027  RCVRY-LKF: link available
             SLC=01    FECLLI=A1234567890        CLASS=MTP2
```

NOTE: SS7IPGW and IPLIM links are considered high-speed links by the EAGLE 5 ISS. They are reported as CLASS=SAAL.

Alarm Level

No alarm condition. The message is informational only.

Procedure

1. This message indicates a previous fault has been corrected. No further action is necessary.

0201 - REPT-LKF: remote NE loopback

Description

This message indicates the link is in loopback. This alarm is repeated every 15 minutes until the loopback is deactivated.

Example

```
     RLGHNCXA21W 00-12-07 12:01:43 EST  EAGLE 35.0.0
**   0014.0201  ** SLK 1205,A nc00027  REPT-LKF:remote NE loopback
                   SLC=01    FECLLI=A1234567890          CLASS=MTP2
```

Alarm Level

Major

Procedure

1. If the loopback was established in error, enter the following command, specifying the location and port from the output message:

dact-lbp:loc=xxxx:port=y
where *xxxx* = the card location from the output
y = the port *A* or *B* from the output.

0202 - REPT-LKF: HWP - too many link interrupts

Description

This message indicates the link has had numerous interruptions.

Example

```
    RLGHNCXA21W 00-12-07 12:01:43 EST  EAGLE 35.0.0
**  0014.202 ** SLK 1205,A nc00027 REPT-LKF:HWP - too many link interrupts
          SLC=01   FECLLI=A1234567890            CLASS=SAAL
```

Alarm Level

Major

Procedure

1. The number of interruptions has exceeded the threshold. This situation can be caused by excessive noise from unshielded cables, loose or disconnected cables.

2. Check the physical connections to the specified card.

3. Follow local procedures to test the link facilities.

0203 - REPT-LKF: lost data

Description

The signaling link has lost data.

Example

```
     RLGHNCXA21W 00-12-07 12:01:43 EST  EAGLE 35.0.0
**   0014.0203  ** SLK 1205,A nc00027  REPT-LKF:lost data
                   SLC=03   FECLLI=testclli          CLASS=MTP2
```

Alarm Level

Major

Procedure

1. Check the physical connections to the signaling link.

2. Using an analyzer, test for level 1 and level 2 functions. Follow local procedures to test and return links to service.

0204 - REPT-LKF: XER - ERM threshold exceeded

Description

The signal unit error rate monitor (ERM) has exceeded the threshold because there are too many errors on the link.

Example

```
   RLGHNCXA21W 00-02-07 12:01:43 EST  EAGLE 35.0.0
** 0014.0204 ** SLK 1205,A nc00027  REPT-LKF:XER-ERM threshold exceeded
           SLC=01    FECLLI=A1234567890          CLASS=SAAL
```

Alarm Level

Major

Procedure

1. Follow local procedures to test the link facilities.

0205 - REPT-LKF: APF - lvl-2 T1 expd (ready)

Description

The signaling link did not receive a fill-in or message signal unit after the proving period.

Example

```
      RLGHNCXA21W 00-12-07 12:01:43 EST  EAGLE 35.0.0
**    0313.0205  ** SLK 1205,A nc00027  REPT-LKF:APF-lvl-2 T1 expd (ready)
                  SLC=03   FECLLI=testclli          CLASS=MTP2
```

Alarm Level

Major

Procedure

1. If the problem persists, follow local procedures to determine why the far-end is not responding correctly.

0206 - REPT-LKF: APF - lvl-2 T1 expd (not ready)

Description

The signaling link did not receive a fill-in or message signal unit after the proving period.

Example

```
   RLGHNCXA21W 00-12-07 12:01:43 EST  EAGLE 35.0.0
** 0313.0206 ** SLK 1205,A nc00027 REPT-LKF:APF - lvl-2 T1 expd (not ready)
               SLC=01   FECLLI=A1234567890          CLASS=SAAL
```

Alarm Level

Major

Procedure

1. If the problem persists, follow local procedures to determine why the far-end is not responding correctly.

0207 - REPT-LKF: APF - lvl-2 T3 expired

Description

The link did not receive an SIN or an SIE before the T3 timer expired.

Example

```
     RLGHNCXA21W 00-12-07 12:01:43 EST  EAGLE 35.0.0
**   0014.0207  ** SLK 1205,A nc00027  REPT-LKF:APF - lvl-2 T3 expired
                SLC=03   FECLLI=testclli          CLASS=MTP2
```

Alarm Level

Major

Procedure

1. If the problem persists, follow local procedures to determine why the far-end is not responding correctly.

0208 - REPT-LKF: APF - lvl-2 T2 expired

Description

The link did not receive an SIN, SIE, or SIOS.

Example

```
     RLGHNCXA21W 00-12-07 12:01:43 EST  EAGLE 35.0.0
**   0014.0208  ** SLK 1205,A nc00027  REPT-LKF:APF - lvl-2 T2 expired
                  SLC=03   FECLLI=testclli          CLASS=SAAL
```

Alarm Level

Major

Procedure

1. If the problem persists, follow local procedures to determine why the far-end is not responding correctly.

0209 - REPT-LKF: APF - failed proving period

Description

The signaling link has failed the proving period.

Example

```
     RLGHNCXA21W 00-12-07 12:01:43 EST  EAGLE 35.0.0
**   0014.0209 ** SLK 1205,A nc00027 REPT-LKF: APF - failed proving period
                  SLC=03   FECLLI=testclli          CLASS=MTP2
```

Alarm Level

Major

Procedure

1. If the problem persists, follow local procedures to determine why the far-end is not responding correctly.

0210 - REPT-LKF: OSA - received SIO

Description

The signaling terminal has received the status indication Out of Alignment from the far end.

Example

```
      RLGHNCXA21W 00-12-07 12:01:43 EST  EAGLE 35.0.0
**    0014.0210  ** SLK 1205,A nc00027  REPT-LKF: OSA - received SIO
               SLC=03   FECLLI=testclli          CLASS=SAAL
```

Alarm Level

Major

Procedure

1. If the problem persists, follow local procedures to determine why the far-end is not responding correctly.

0211 - REPT-LKF: OSA - received SIN

Description

The signaling terminal has received the status indication normal proving from the far end.

Example

```
     RLGHNCXA21W 00-12-07 12:01:43 EST  EAGLE 35.0.0
**   0014.0211 **  SLK 1205,A nc00027  REPT-LKF: OSA - received SIN
                  SLC=03   FECLLI=testclli          CLASS=MTP2
```

Alarm Level

Major

Procedure

1. If the problem persists, follow local procedures to determine why the far-end is not responding correctly.

0212 - REPT-LKF: OSA - received SIE

Description

The signaling terminal has received the status indication emergency alignment, from the far end.

Example

```
     RLGHNCXA21W 00-12-07 12:01:43 EST  EAGLE 35.0.0
**   0014.0212  **  SLK 1205,A nc00027  REPT-LKF: OSA - received SIE
            SLC=03   FECLLI=testclli           CLASS=SAAL
```

Alarm Level

Major

Procedure

1. If the problem persists, follow local procedures to determine why the far-end is not responding correctly.

0213 - REPT-LKF: OSA - received SIOS

Description

The signaling link has received the status indication out of service from the far end.

Example

```
    RLGHNCXA21W 00-12-07 12:01:43 EST  EAGLE 35.0.0
**  0014.0213 **  SLK 1205,A nc00027  REPT-LKF: OSA - received SIOS
                  SLC=03   FECLLI=testclli          CLASS=MTP2
```

Alarm Level

Major

Procedure

1. If the problem persists, follow local procedures to determine why the far-end is not responding correctly.

0214 - REPT-LKF: ABN - rcvd 2 of 3 invalid BSN

Description

The link has received 2 out of 3 invalid backward sequence numbers (BSNs) from the far end.

Example

```
   RLGHNCXA21W 00-12-07 12:01:43 EST  EAGLE 35.0.0
**  0014.0214 ** SLK 1205,A nc00027  REPT-LKF: ABN - rcvd 2 of 3 invalid BSN
               SLC=03   FECLLI=testclli          CLASS=SAAL
```

Alarm Level

Major

Procedure

1. If the problem persists, follow local procedures to determine why the far-end is not responding correctly.

0215 - REPT-LKF: ABN - rcvd 2 of 3 invalid FIB

Description

The signaling link has received 2 out of 3 invalid forward indicator bits (FIB) from the far end.

Example

```
    RLGHNCXA21W 00-12-07 12:01:43 EST  EAGLE 35.0.0
**  0014.0215 **  SLK 1205,A nc00027  REPT-LKF: ABN-rcvd 2 of 3 invalid FIB
                  SLC=03   FECLLI=testclli          CLASS=MTP2
```

Alarm Level

Major

Procedure

1. If the problem persists, follow local procedures to determine why the far-end is not responding correctly.

0216 - REPT-LKF: remote congestion timeout

Description

The remote node has been in congestion too long. The T6 timer has timed out.

Example

```
    RLGHNCXA21W 00-12-07 12:01:43 EST  EAGLE 35.0.0
**  0014.0216 ** SLK 1205,A nc00027  REPT-LKF:remote congestion timeout
                 SLC=03   FECLLI=testclli          CLASS=SAAL
```

Alarm Level

Major

Procedure

1. If the problem persists, follow local procedures to determine why the far-end is not responding correctly.

0217 - REPT-LKF: XDA - excess acknowledge delay

Description

The far end node is taking too long to acknowledge the messages sent to it by the signaling terminal. The T7 timer has timed out.

Example

```
   RLGHNCXA21W 00-12-07 12:01:43 EST  EAGLE 35.0.0
** 0014.0217 ** SLK 1205,A nc00027  REPT-LKF: XDA-excess acknowledge delay
               SLC=03   FECLLI=testclli          CLASS=MTP2
```

Alarm Level

Major

Procedure

1. If the problem persists, follow local procedures to determine why the far-end is not responding correctly.

0218 - REPT-LKF: COO - rcvd changeover order

Description

The signaling link has received a changeover order from the far end.

Example

```
     RLGHNCXA21W 00-12-07 12:01:43 EST  EAGLE 35.0.0
**   0014.0218 **  SLK 1205,A nc00027  REPT-LKF:COO-rcvd changeover order
                    SLC=03   FECLLI=testclli          CLASS=SAAL
```

Alarm Level

Major

Procedure

1. If the problem persists, follow local procedures to determine why the far-end is not responding correctly.

0219 -REPT-LKF: false congestion restart

Description

This message indicates the signaling link has entered a congestion state even though the traffic on the linkset is not high enough to cause congestion. For example, if the link has a high number of retransmissions, the throughput on the link could drop enough to cause congestion on the link. A T31 timer has started. If the link stays in congestion for a specified period, the link is restarted.

Example

```
     RLGHNCXA21W 00-12-07 12:01:43 EST  EAGLE 35.0.0
**   0014.0219 **  SLK 1205,A nc00027  REPT-LKF:false congestion restart
                    SLC=03   FECLLI=testclli          CLASS=MTP2
```

Alarm Level

Major

Procedure

1. Activate measurements using the *chg-meas:collect=on* command. This starts measurements collection.

2. If the link is placed OOS-MT, use the measurements collected over the appropriate time period to determine the cause, and determine which action is now necessary.

   NOTE: See Chapter 4, "Measurements," for traffic measurements information.

0220 - REPT-LKF: MTP link restart delayed

Description

This message indicates that a link has gone in and out-of-service. To avoid links going in and out-of-service repeatedly, the EAGLE 5 ISS system delays restarting a link if the link has an unstable history.

Example

```
     RLGHNCXA21W 00-12-07 12:01:43 EST  EAGLE 35.0.0
**   0014.0220 **  SLK 1205,A nc00027  REPT-LKF:MTP link restart delayed
                    SLC=03   FECLLI=testclli          CLASS=SAAL
```

NOTE: SS7IPGW and IPLIM links are considered high-speed links by the EAGLE 5 ISS system. They are reported as CLASS=SAAL.

Alarm Level

Major

Procedure

3. The link should become available. If the problem persists, contact Tekelec Technical Services at the appropriate number.

Reference: “Customer Care Center” on page 1-13.

0221 - REPT-LKF: X25 link unavailable

Description

This message indicates that the specified X.25 link is out-of-service.

Example

```
       RLGHNCXA21W 00-12-07 12:01:43 EST  EAGLE 35.0.0
**     0014.0221 **  SLK 1205,A nc00027  REPT-LKF:X25 link unavailable
                      SLC=03   FECLLI=testclli          CLASS=MTP2
```

Alarm Level

Major

Procedure

1. To check the status of the X.25 signaling link, enter the *rept-stat-slk* command with the port and card location specified from the output message above. Following is an example of the command output:

```
RLGHNCXA03W 00-03-14  17:00:00  EST  EAGLE 35.0.0
SLK     LSN          CLLI          PST           SST      AST
1205,A  nc00027      testclli      OOS-MT       Unavail   ----
  ALARM STATUS        = * REPT-LKF:X25 link unavailable
  UNAVAIL REASON      = X25FL LI NA
```

2. Note the UNAVAIL REASON field in the output message. Following are the reasons the link is unavailable:

a. LD – The signaling link has lost data

b. X25FL – X.25 link has failed.

c. NA – The signaling link is not aligned

3. If the UNAVAIL REASON indicates an alignment problem, use the *dact-slk* command followed by the *act-slk* command to place the link into service.

4. If the UNAVAIL REASON still indicates an alignment problem, check the status of the card by entering the *rept-stat-card* command for the specified card.

5. If the *rept-stat-card* command indicates a problem with the card, reset the card by entering the *init-card* command with the specified card location. If the card still does not align, try first reseating the card, then replacing the card (using the card replacement procedures in Appendix A, *Card Removal/Replacement Procedures*).

6. If the problem persists, verify the adjacent X.25 node has the link activated.

7. Determine if the link failure is due to bad carrier facilities. Using transmission test equipment test the X.25 link end-to-end. If a protocol analyzer is available, bad CRCs in the X.25 protocol indicates excessive noise on the link.

8. If the carrier facilities are good, but the problem persists, determine if the X.25 adjacent node has a bad X.25 card by swapping the existing card with a known good card.

9. If the X.25 link is still unavailable, contact Tekelec Technical Services at the appropriate number.

   Reference: “Customer Care Center” on page 1-13.

0222 - REPT-LKF: remote FE loopback

Description

This message indicates that the specified link has been looped back from the far-end.

Example

```
      RLGHNCXA21W 00-12-07 12:01:43 EST  EAGLE 35.0.0
**    0014.0222 **  SLK 1205,A nc00027  REPT-LKF:remote FE loopback
                     SLC=03   FECLLI=testclli          CLASS=MTP2
```

Alarm Level

Major

Procedure

1. If you wish to stop the loopback testing, notify the far-end to stop the testing.

0223 - REPT-LKF: remote NE loopback cleared

Description

This message indicates the link was in loopback and now the loopback has been deactivated.

Example

```
RLGHNCXA21W 00-12-07 12:01:43 EST  EAGLE 35.0.0
0014.0223   SLK 1205,A nc00027  REPT-LKF:remote NE loopback cleared
              SLC=01    FECLLI=A1234567890          CLASS=SAAL
```

Alarm Level

No alarm condition. The message is informational only.

Procedure

1. No further action is necessary.

0224 - REPT-LKF: link test failed

Description

This message indicates that the specified link was automatically removed from service (OOS) because of a failed signaling link test.

Example

```
      RLGHNCXA21W 00-12-07 12:01:43 EST  EAGLE 35.0.0
**    0014.0224 **  SLK 1205,A nc00027  REPT-LKF:link test failed
                     SLC=03   FECLLI=testclli          CLASS=MTP2
```

Alarm Level

Major

Procedure

1. Check the physical connections to the signaling link.

2. Follow local procedures to check link data at both ends.

3. Using an analyzer, test for level 1 and level 2 functions. Follow local procedures to test and return links to service.

0230 - REPT-LKF: local blocked - thermal

Description

All links to the HC MIM are blocked because the the temperature of the HC MIM is above operational limits.

Example

```
     RLGHNCXA21W 00-02-07 12:01:43 EST  EAGLE 35.0.0
**   0014.0230 **  SLK 1205,A nc00027  REPT-LKF: local blocked - thermal
                   SLC=03   FECLLI=testclli          CLASS=MTP2
```

Alarm Level

Major

Procedure

1. Review the output. Correct the associated alarms to clear this alarm.

0232 - REPT-LKF: remote blocked

Description

The link is blocked due to an event at the far-end.

Example

```
     RLGHNCXA21W 00-02-07 12:01:43 EST  EAGLE 35.0.0
**   0014.0232 **  SLK 1205,A nc00027  REPT-LKF: remote blocked
                   SLC=03   FECLLI=testclli          CLASS=MTP2
```

Alarm Level

Major

Procedure

1. Contact the far-end office to verify a processor outage and correct.

0233 - REPT-LINK-MANUAV: local blocked

Description

A local technician has put the signaling link in processor outage.

Example

```
      RLGHNCXA21W 00-02-07 12:01:43 EST  EAGLE 35.0.0
**    0014.0233 **  SLK 1205,A nc00027  REPT-LINK-MANUAV: local blocked
                     SLC=03   FECLLI=testclli          CLASS=SAAL
```

Alarm Level

Major

Procedure

1. Verify the condition is not intentional. If it is not intentionally blocked, enter the following command to place the link in service:

ublk-slk:loc=xxxx:port=y
where *xxxx* is the card location
y is the port

2. This should place the processor back into service. The following message should appear.

```
RLGHNCXA03W  00-02-07  11:11:28 EST  EAGLE 35.0.0
Local processor outage being cleared.
```

0234 - REPT-LKF: RMI remote inhibited

Description

The link has been remotely inhibited by a technician at the far-end office.

Example

```
     RLGHNCXA21W 00-02-07 12:01:43 EST  EAGLE 35.0.0
**   0014.0234 **  SLK 1205,A nc00027  REPT-LKF: RMI remote inhibited
                   SLC=03   FECLLI=testclli          CLASS=MTP2
```

Alarm Level

Major

Procedure

1. Contact the far-end office to verify the reason for inhibiting the link.

0235 - REPT-LINK-MGTINH: local inhibited

Description

The link has been inhibited locally by a technician.

Example

```
      RLGHNCXA21W 00-02-07 12:01:43 EST  EAGLE 35.0.0
**    0014.0235 **  SLK 1205,A nc00027  REPT-LINK-MGTINH: local inhibited
                  SLC=03   FECLLI=testclli          CLASS=SAAL
```

Alarm Level

Major

Procedure

1. Ensure the link should not be inhibited. Enter the following command to place the link in service.

unhb-slk:loc=xxxx:port=y

where *xxxx* is the card location
y is the port

2. The link should begin transmitting and receiving MSUs. The following message should appear.

```
RLGHNCXA03W  00-02-07  11:11:28 EST  EAGLE 35.0.0
Allow link message sent to card.
```

0236 - REPT-LKF: not aligned

Description

The signaling link has lost alignment. It can no longer carry traffic.

Example

```
     RLGHNCXA21W 00-02-07 12:01:43 EST  EAGLE 35.0.0
**   0014.0236 **  SLK 1205,A nc00027  REPT-LKF: not aligned
                    SLC=03   FECLLI=testclli          CLASS=MTP2
```

Alarm Level

Major

Procedure

1. Put the link into a local loopback state.

2. If the link does not align, enter the following command to determine the status of the card.

rept-stat-card

3. If the card has reinitialized, the system software will restore the card. If both links on the card are out of service, but the card is IS-NR (In-Service-Normal), reseat the card.

4. If the links restore after reseating the card, this procedure is complete.

5. If the links do not restore after reseating the card, enter the following command:

rmv-card:loc=xxxx
where xxxx = the card location.

6. After the command is complete, enter the following command:

rst-card:loc=xxxx
where xxxx = the card location.

7. If the links restore after restoring the card, this procedure is complete.

8. If the fault does not clear, replace the indicated card.

9. If the link aligns when it is in a loopback state, enter the following command to determine the DPC of the far end office:

rtrv-slk:loc=xxxx
where xxxx = the card location.

Contact the far end office to determine if the trouble is at that end.

---

10. If the fault does not clear, determine if any other links on the same carrier are affected. If other links on the same carrier are affected, you may have trouble in your carrier.

---

11. Using measurements, review the activity over the last day and determine if there were a number of retransmits, message losses and so forth. Use this data to isolate the problem to the appropriate level (MTP level 2, MTP level 3, and so forth). Use your company maintenance procedures for testing and clearing faults in carriers.

NOTE: See Appendix A, *Card Removal/Replacement Procedures* **for procedures on replacing cards.**

0237 - REPT-LFK: LM Timer NO-CREDIT expired

Description

The remote node has held the local node in a no-credit state for too long.

Example

```
       RLGHNCXA21W 00-02-07 12:01:43 EST  EAGLE 35.0.0
 **    0014.0237 **  SLK 1205,A nc00027  REPT-LKF: LM Timer NO-CREDIT expired
                   SLC=03   FECLLI=testclli            CLASS=SAAL
```

Alarm Level

Major

Procedure

1. Contact the far-end office to test and correct the link congestion problem.

0238 - REPT-LKF: XDA-Timer NO-RESPONSE expired

Description

The far end is not responding to the outgoing POLL messages.

Example

```
     RLGHNCXA21W 00-02-07 12:01:43 EST  EAGLE 35.0.0
**   0014.0238 **  SLK 1205,A nc00027  REPT-LKF: Timer NO-RESPONSE expired
                    SLC=03   FECLLI=testclli          CLASS=MTP2
```

Alarm Level

Major

Procedure

1. Contact the far-end office to determine why no STAT messages are being sent.

0239 - REPT-LKF: MBL-local processor outage

Description

Indicates a manually (command) initiated local processor outage.

Example

```
     RLGHNCXA21W 00-02-07 12:01:43 EST  EAGLE 35.0.0
**   0014.0239 **  SLK 1205,A nc00027  REPT-LKF:MBL - local processor outage
                   SLC=03   FECLLI=testclli            CLASS=MTP2
```

Alarm Level

Major

Procedure

1. Since this outage was manually initiated, verify the reason the command was issued before continuing to Step 2.

2. Enter the following command to clear the manually initiated processor outage:

canc-lpo:loc=xxxx:port=yy

Where *xxxx* is the location of the card identified in the output and yy is the port value.

Example Output

```
rlghncxa03w 03-02-07 11:11:28 EST EAGLE 35.0.0
Local processor outage being cleared.
```

3. Analyze the output. If the processor outage was not cleared, contact Tekelec Technical Services at the appropriate number.

Reference: “Customer Care Center” on page 1-13.

0240 - REPT-LKF: rcvd SSCOP END-proc outage

Description

The far end sent an END processor outage protocol data unit (PDU).

Example

```
     RLGHNCXA21W 00-02-07 12:01:43 EST  EAGLE 35.0.0
**   0014.0240 **  SLK 1205,A nc00027  REPT-LKF:rcvd SSCOP END-proc outage
                    SLC=03   FECLLI=testclli          CLASS=MTP2
```

Alarm Level

Major

Procedure

1. Contact the far-end office to verify a processor outage and the cause.

0241 - REPT-LKF: rcvd SSCOP END-out of service

Description

The far end sent an END out of service protocol data unit (PDU).

Example

```
     RLGHNCXA21W 00-02-07 12:01:43 EST  EAGLE 35.0.0
**   0014.0241 **  SLK 1205,A nc00027  REPT-LKF:rcvd SSCOP END-out of service
                   SLC=03   FECLLI=testclli            CLASS=MTP2
```

Alarm Level

Major

Procedure

1. Contact the far-end office to correct the problem.

0242 - REPT-LKF: rcvd SSCOP END-protocol error

Description

A protocol error has occurred on the far end.

Example

```
     RLGHNCXA21W 00-02-07 12:01:43 EST  EAGLE 35.0.0
**   0014.0242 **  SLK 1205,A nc00027  REPT-LKF:rcvd SSCOP END-protocol error
                   SLC=03   FECLLI=testclli            CLASS=MTP2
```

Alarm Level

Major

Procedure

1. Contact the far-end office to test and correct the problem.

0243 - REPT-LKF:rcvd SSCOP END-mgmnt initiated

Description

The MAAL layer (not a user) on the far end released a link.

Example

```
     RLGHNCXA21W 00-02-07 12:01:43 EST  EAGLE 35.0.0
**   0014.0243 **  SLK 1205,A nc00027  REPT-LKF:rcvd SSCOP END-mgmnt initiated
                   SLC=03   FECLLI=testclli            CLASS=MTP2
```

Alarm Level

Major

Procedure

1. Contact the far-end office for the details about releasing the link.

0244 - REPT-LKF: FAC - DS1 LOS failure

Description

A level 1 facility outage: loss of signal.

Example

```
     RLGHNCXA21W 00-02-07 12:01:43 EST  EAGLE 35.0.0
**   0014.0244 **  SLK 1205,A nc00027  REPT-LKF:FAC - DS1 LOS failure
                   SLC=03   FECLLI=testclli            CLASS=MTP2
```

Alarm Level

Major

Procedure

1. Enter the following command to display the service data:

   rept-stat-slk:l2stats=both

2. Check the physical connections to the signaling link.

3. Using an analyzer, test for level 1 and level 2 functions. Follow local procedures to test and return links to service.

0245 - REPT-LKF: FAC - DS1 LOF failure

Description

A level 1 facility outage: loss of frame.

Example

```
     RLGHNCXA21W 00-02-07 12:01:43 EST  EAGLE 35.0.0
**   0014.0245 **  SLK 1205,A nc00027  REPT-LKF:FAC - DS1 LOF failure
                   SLC=03   FECLLI=testclli            CLASS=MTP2
```

Alarm Level

Major

Procedure

1. Enter the following command to display the service data:

rept-stat-slk:l2stats=both

2. Check the physical connections to the signaling link.

3. Using an analyzer, test for level 1 and level 2 functions. Follow local procedures to test and return links to service.

0246 - REPT-LKF: FAC - DS1 LCD failure

Description

A level 1 facility outage: loss of cell delineation.

Example

```
     RLGHNCXA21W 00-02-07 12:01:43 EST  EAGLE 35.0.0
**   0014.0246 **  SLK 1205,A nc00027  REPT-LKF:FAC - DS1 LCD failure
                   SLC=03   FECLLI=testclli            CLASS=MTP2
```

Alarm Level

Major

Procedure

1. Enter the following command to display the service data:

   rept-stat-slk:l2stats=both

2. Check the physical connections to the signaling link.

3. Using an analyzer, test for level 1 and level 2 functions. Follow local procedures to test and return links to service.

0247 - REPT-LKF: XER - ISERM threshold exceeded

Description

The in-service error rate monitor (ISERM) maintains a counter to estimate the PDU error rate. The ISERM counter exceeded the estimated threshold.

Example

```
     RLGHNCXA21W 00-02-07 12:01:43 EST  EAGLE 35.0.0
**   0014.0247 **  SLK 1205,A nc00027 REPT-LKF:XER - ISERM threshold exceeded
                   SLC=03   FECLLI=testclli            CLASS=MTP
```

Alarm Level

Major

Procedure

1. Contact the far-end office to determine why the error rate is so high.

0250 - MPS available

Description

This indicates that a previous MPS platform association loss has been reestablished and is currently functioning properly.

Example

```
station1234 99-03-30 16:28:08 EST  EAGLE 35.0.0
3535.0250    MPS A         MPS available
```

Alarm Level

No alarm condition. The message is informational only.

Procedure

1. This message indicates a previous fault has been corrected. No further action is necessary.

0261 - MPS unavailable

Description

This message indicates that the EAGLE 5 ISS system is unable to communicate with the MPS or the MPS has an internal failure.

Example

```
      station1234 99-03-30 16:28:08 EST  EAGLE 35.0.0
 *C   3535.0261  *C  MPS A         MPS unavailable
```

Alarm Level

Critical

Procedure

1. This message reports that communication with the MPS is not occurring. You should verify the MPS is operating and the IP link is functioning by performing the following steps.

2. Verify the IP connection from the MPS to EAGLE 5 ISS is operating. If not, restore the communication link between the them.

3. Once the communications link with the MPS is assured, verify the status of the MPS. The following example shows a possible system response when a specified DSM card is queried with the `rept-stat-mps` command.

rept-stat-mps:loc=1205

```
rlghncxa03w 00-03-07 10:23:93 EST  EAGLE 35.0.0
CARD   VERSION       TYPE    PST            SST          AST
1205   -----------   DSM     OOS-MT-DSBLD   Manual       -----
  DSM PORT A                 OOS-MT         Unavail      -----
            ALARM STATUS       = **  0084 IP Connection Unavailable
  DSM PORT B                 OOS-MT         Unavail      -----
            ALARM STATUS       = **  0084 IP Connection Unavailable
  INP STAT           = -------
  CARD ALARM STATUS  = No Alarms.
  DSM MEMORY USAGE   = 0%
Command Completed.
;
```

Determine from the output whether the MPS is active and available for service. If it is not, refer to the *ELAP Administration Manual* or *EPAP Administration Manual* about restoring an MPS server to the active state.

0264 - REPT-LINK-CGST: congestion level 0 to 1

Description

The amount of MSU traffic on the link has reached a congestion level 1.

Example

```
RLGHNCXA21W 00-12-07 12:01:43 EST  EAGLE 35.0.0
0014.0264   SLK 1205,A nc00027  REPT-LINK-CGST: congestion level 0 to 1
              SLC=03   FECLLI=testclli          CLASS=SAAL
```

Alarm Level

No alarm condition. The message is informational only.

Procedure

1. Since congestion usually peaks and subsides quickly, a measurements report should be printed to understand what SS7 events took place. Use the command *rept-meas* to obtain a report.

   NOTE: The measurements collection must first be turned on so measurements can be collected. If measurements are not turned on, no report will be available. See Chapter 4, "Measurements," for traffic measurements information.

2. Ensure that there are enough links in the linkset based on the traffic load.

0265 - REPT-LINK-CGST: congestion level 1 to 2

Description

The amount of MSU traffic on the link has reached a congestion level 2.

Example

```
RLGHNCXA21W 00-12-07 12:01:43 EST  EAGLE 35.0.0
0014.0265    SLK 1205,A nc00027  REPT-LINK-CGST: congestion level 1 to 2
               SLC=03   FECLLI=testclli          CLASS=MTP2
```

Alarm Level

No alarm condition. The message is informational only.

Procedure

1. Since congestion usually peaks and subsides quickly, a measurements report should be printed to understand what SS7 events took place. Use the command *rept-meas* to obtain a report.

   NOTE: The measurements collection must first be turned on so measurements can be collected. If measurements are not turned on, no report will be available. See Chapter 4, "Measurements," for traffic measurements information.

2. Ensure that there are enough links in the linkset based on the traffic load.

0266 - REPT-LINK-CGST: congestion level 2 to 3

Description

The congestion on a link has risen to level 3. That is, the amount of MSU traffic on the signaling link has reached the onset level defined for congestion level 3. This usually indicates the node is under provisioned.

Example

```
RLGHNCXA21W 00-12-07 12:01:43 EST  EAGLE 35.0.0
0014.0266   SLK 1205,A nc00027  REPT-LINK-CGST: congestion level 2 to 3
               SLC=03   FECLLI=testclli          CLASS=SAAL
```

Alarm Level

No alarm condition. The message is informational only.

Procedure

1. Since congestion usually peaks and subsides quickly, a measurements report should be printed to understand what SS7 events took place. Use the command *rept-meas* to obtain a report.

   NOTE: The measurements collection must first be turned on so measurements can be collected. If measurements are not turned on, no report will be available. See Chapter 4, "Measurements," for traffic measurements information.

2. Ensure that there are enough links in the linkset based on the traffic load.

0267 - RCVRY-LINK-CGST:congestion level 3 to 2

Description

The congestion on a link has fallen to level 2. That is, the amount of MSU traffic on the signaling link has reached the abatement level defined for congestion level 3. This indicates congestion is clearing.

Example

```
RLGHNCXA21W 00-12-07 12:01:43 EST  EAGLE 35.0.0
0014.0267   SLK 1205,A nc00027   RCVRY-LINK-CGST:congestion level 3 to 2
                SLC=03   FECLLI=testclli            CLASS=MTP2
```

Alarm Level

No alarm condition. The message is informational only.

Procedure

1. Since congestion usually peaks and subsides quickly, a measurements report should be printed to understand what SS7 events took place. Use the command *rept-meas* to obtain a report.

NOTE: The measurements collection must first be turned on so measurements can be collected. If measurements are not turned on, no report will be available. See Chapter 4, "Measurements," for traffic measurements information.

0268 - RCVRY-LINK-CGST:congestion level 2 to 1

Description

The congestion on a link has fallen to level 1. That is, the amount of MSU traffic on the signaling link has reached the abatement level defined for congestion level 2. This indicates congestion is clearing.

Example

```
RLGHNCXA21W 00-12-07 12:01:43 EST  EAGLE 35.0.0
0014.0268   SLK 1205,A nc00027   RCVRY-LINK-CGST:congestion level 2 to 1
              SLC=03   FECLLI=testclli            CLASS=SAAL
```

Alarm Level

No alarm condition. The message is informational only.

Procedure

1. Since congestion usually peaks and subsides quickly, a measurements report should be printed to understand what SS7 events took place. Use the command *rept-meas* to obtain a report.

NOTE: The measurements collection must first be turned on so measurements can be collected. If measurements are not turned on, no report will be available. See Chapter 4, "Measurements," for traffic measurements information.

0269 - RCVRY-LINK-CGST: congestion has cleared

Description

This message is generated when the congested state of a link has been removed.

Example

```
RLGHNCXA21W 00-12-07 12:01:43 EST  EAGLE 35.0.0
0014.0269   SLK 1205,A nc00027 RCVRY-LINK-CGST: congestion has cleared
               SLC=03   FECLLI=testclli          CLASS=MTP2
```

Alarm Level

No alarm condition. The message is informational only.

Procedure

1. This message indicates a previous fault has been corrected. No further action is necessary.

0270 - REPT-LINK-CGST: discard level 0 to 1

Description

The amount of MSU traffic on the link has reached an overflow level 1. Messages with an SIO priority of 0 are being discarded.

Example

```
RLGHNCXA21W 00-12-07 12:01:43 EST  EAGLE 35.0.0
0014.0270    SLK 1205,A nc00027  REPT-LINK-CGST: discard level 0 to 1
             SLC=03   FECLLI=testclli          CLASS=SAAL
```

Alarm Level

No alarm condition. The message is informational only.

Procedure

1. Since overflow conditions usually peak and subside quickly, a measurements report should be printed to understand what SS7 events took place. Use the command *rept-meas* to obtain a report.

   NOTE: The measurements collection must first be turned on so measurements can be collected. If measurements are not turned on, no report will be available. See Chapter 4, "Measurements," for traffic measurements information.

2. Ensure that there are enough links in the linkset based on the traffic load.

0271 - REPT-LINK-CGST: discard level 1 to 2

Description

The link has reached an overflow level 2. The percentage of MSU traffic on the signaling link has exceeded the discard/overflow level defined for level 2. Messages with SIO priority of 0 or 1 are being discarded.

Example

```
RLGHNCXA21W 00-12-07 12:01:43 EST  EAGLE 35.0.0
0014.0271    SLK 1205,A nc00027  REPT-LINK-CGST: discard level 1 to 2
             SLC=03   FECLLI=testclli          CLASS=MTP2
```

Alarm Level

No alarm condition. The message is informational only.

Procedure

1. Since overflow conditions usually peak and subside quickly, a measurements report should be printed to understand what SS7 events took place. Use the command *rept-meas* to obtain a report.

   NOTE: The measurements collection must first be turned on so measurements can be collected. If measurements are not turned on, no report will be available. See Chapter 4, "Measurements," for traffic measurements information.

2. Ensure that there are enough links in the linkset based on the traffic load.

0272 - REPT-LINK-CGST: discard level 2 to 3

Description

The amount of MSU traffic on the link has reached an overflow level 3. Messages with an SIO priority of 0, 1, or 2 are being discarded.

Example

```
RLGHNCXA21W 00-12-07 12:01:43 EST  EAGLE 35.0.0
0014.0272    SLK 1205,A nc00027  REPT-LINK-CGST: discard level 2 to 3
              SLC=03   FECLLI=testclli          CLASS=SAAL
```

Alarm Level

No alarm condition. The message is informational only.

Procedure

1. Since overflow conditions usually peak and subside quickly, a measurements report should be printed to understand what SS7 events took place. Use the command *rept-meas* to obtain a report.

   NOTE: The measurements collection must first be turned on so measurements can be collected. If measurements are not turned on, no report will be available. See Chapter 4, "Measurements," for traffic measurements information.

2. Ensure that there are enough links in the linkset based on the traffic load.

0273 - RCVRY-LINK-CGST: discard level 3 to 2

Description

The amount of MSU traffic on the link has reached an overflow level 2 and congestion is clearing. Messages with an SIO priority of 0 or 1 are being discarded.

Example

```
RLGHNCXA21W 00-12-07 12:01:43 EST  EAGLE 35.0.0
0014.0273    SLK 1205,A nc00027  RCVRY-LINK-CGST: discard level 3 to 2
               SLC=03   FECLLI=testclli          CLASS=MTP2
```

Alarm Level

No alarm condition. The message is informational only.

Procedure

1. Since overflow conditions usually peak and subside quickly, a measurements report should be printed to understand what SS7 events took place. Use the command *rept-meas* to obtain a report.

NOTE: The measurements collection must first be turned on so measurements can be collected. If measurements are not turned on, no report will be available. See Chapter 4, "Measurements," for traffic measurements information.

0274 - RCVRY-LINK-CGST: discard level 2 to 1

Description

The amount of MSU traffic on the link has decreased to an overflow level 1 and congestion is clearing. Messages with an SIO priority of 0 are being discarded.

Example

```
RLGHNCXA21W 00-12-07 12:01:43 EST  EAGLE 35.0.0
0014.0274   SLK 1205,A nc00027  RCVRY-LINK-CGST: discard level 2 to 1
               SLC=03   FECLLI=testclli          CLASS=SAAL
```

Alarm Level

No alarm condition. The message is informational only.

Procedure

1. Since overflow conditions usually peak and subside quickly, a measurements report should be printed to understand what SS7 events took place. Use the command *rept-meas* to obtain a report.

NOTE: The measurements collection must first be turned on so measurements can be collected. If measurements are not turned on, no report will be available. See Chapter 4, "Measurements," for traffic measurements information.

0275 - RCVRY-LINK-CGST: discard has cleared

Description

The overflow level of the link has reached level 0. No messages are being discarded.

Example

```
RLGHNCXA21W 00-12-07 12:01:43 EST  EAGLE 35.0.0
0014.0275    SLK 1205,A nc00027  RCVRY-LINK-CGST: discard has cleared
             SLC=03   FECLLI=testclli          CLASS=MTP2
```

Alarm Level

No alarm condition. The message is informational only.

Procedure

1. This message indicates a previous fault has been corrected. No further action is necessary.

0276 - Insufficient HW for IP7 provisioning

Description

The DCM or EDCM/EDCM-A does not have enough memory to provision for sockets and associations.

Example

```
     RLGHNCXA21W 00-02-07 11:02:30 EST  EAGLE 35.0.0
**   0100.0276 ** CARD  1115 DCM   Insufficient HW for IP7 provisioning
                  HW VERIFICATION CODE: xxx
```

Alarm Level

Major

Procedure

1. If this message contains the optional line ‘HW VERIFICATION CODE: xxx’:

- Go Appendix Appendix E, Auto-Inhibit HW Verification Codes, and decode the xxx value in Table E-1. Correct the indicated problem.
- After correcting the problem, the card will be in *out-of-service maintenance disabled state* (OOS-MT-DSBLD). Restore the card back to *in-service normal state* (IS-NR) with the `alw-card` command.

If this message does not contain the optional line ‘HW VERIFICATION CODE: xxx’, continue with the next step.

2. Verify the DCM/EDCM/EDCM-A hardware. Verify the provisioning rules.

Table 3-19. Maximum Sockets/Associations per Card

Card Type	Socket to Association Ratio	Maximum Sockets	Maximum Associations
DCM	8:1	50	4
EDCM	1:1	50 (see Note)	50 (see Note)

NOTE: The EDCM-A assembly will support only eight connections even though it is not enforced by software.

3. If necessary, reduce the number of associations to four or less for DCMs or 50 or less for EDCMs/EDCM-As. Refer to the *Database Administration Manual - SS7* for detailed provisioning information.

0277 - AS Unavailable

Description

This Application Server (AS) is not available to carry service traffic. All ASPs in this AS are not available to carry service traffic.

Example

```
      RLGHNCXA21W 00-12-07 12:01:43 EST  EAGLE 35.0.0
 **   0014.0277  **  IP7    as3        AS Unavailable
```

Alarm Level

Major

Procedure

1. Enter the following command to generate a report of the AS association status.

rept-stat-assoc

Following is an example of the output:

```
rlghncxa03w 00-03-04 12:57:21 EST EAGLE 31.3.0
ASSOCIATION      PST           SST
a1               IS-NR         ASP-ACTIVE
a2               IS-ANR        ASP-ACTIVE
a3               OOS-MT-DSBLD  ----
a4               OOS-MT        Connecting
a5               OOS-MT        ASP-DOWN
a6               OOS-MT        ASP-UP
Command Completed
```

2. Notify the PSTN associated with the disabled AS of the problem.

0278- AS Available

Description

The Application Server (AS) is now available to carrying traffic.

Example

```
RLGHNCXA21W 00-12-07 12:01:43 EST  EAGLE 35.0.0
0014.0278    IP7    as2        AS Available
```

Alarm Level

No alarm condition. The message is informational only.

Procedure

1. This message indicates a previous fault has been corrected. No further action is necessary.

0279 - AS Restricted

Description

The Application Server (AS) is carrying traffic, but one or or of the Application Server Processes (ASPs) is not functioning properly.

Example

```
      RLGHNCXA21W 00-12-07 12:01:43 EST  EAGLE 31.3.0
 *    0014.0279  *  IP7    as2        AS Resticted
```

Alarm Level

Minor

Procedure

1. Enter the following command to generate a report of the AS association status.

rept-stat-assoc

Following is an example of the output:

```
rlghncxa03w 00-03-04 12:57:21 EST EAGLE 31.3.0
ASSOCIATION      PST           SST
a1               IS-NR         ASP-ACTIVE
a2               IS-ANR        ASP-ACTIVE
a3               OOS-MT-DSBLD  ----
a4               OOS-MT        Connecting
a5               OOS-MT        ASP-DOWN
a6               OOS-MT        ASP-UP
Command Completed
```

2. Notify the PSTN associated with the restricted AS of the problem.

0280 - AS Unrestricted

Description

The Application Server (AS) is carrying traffic. A previous restriction has been cleared.

Example

```
RLGHNCXA21W 00-12-07 12:01:43 EST  EAGLE 35.0.0
0014.0280    IP7    as2        AS Unrestricted
```

Alarm Level

No alarm condition. The message is informational only.

Procedure

1. This message indicates a previous fault has been corrected. No further action is necessary.

0281 - LNP Ported TNs exceeds Feat. Capacity

Description

The number of LNP ported TNs is greater than the capacity this feature supports.

This UAM appears when the DSM VSCCP cards are cold-restarted after the ELAP RTDBs were pre-populated offline with RTDB TN totals that exceed either the TN Quantity Feature keys capacities that are currently configured for the EAGLE 5 ISS.

Example

```
     RLGHNCXA21W 03-02-07 11:02:30 EST  EAGLE 35.0.0
**   0100.0281 ** CARD  1115 DCM   LNP Ported TNs exceeds Feat. Capacity
```

Alarm Level

Major

Procedure

1. Issue the `rtrv-ctrl-feat` command to verify the quantity of TNs specified for this system.

2. Either reduce the number of TNs to the level specified by the output of step 1, or respecify the capacity with the `enable-ctrl-feat` command.

0282 - LNP Ported TNs Capacity Normal

Description

This UAM is a clearing message that appears when the operator enables the TN feature key quantities on the EAGLE 5 ISS that exceed the quantities currently populated in the ELAP RTDBs.

Example

```
      RLGHNCXA21W 03-02-07 11:02:30 EST  EAGLE 35.0.0
 **   0100.0282    CARD  1115 DCM   LNP Ported TNs Capacity Normal
```

Alarm Level

No alarm condition. The message is informational only.

Procedure

1. This message indicates a previous fault has been corrected. No further action is necessary.

0283 - LNP Ported LRNs approaching Feat. Capacity

Description

The number of LNP-ported LRNs is greater than the capacity this feature supports.

This UAM appears when the DSM VSCCP cards are cold-restarted after the ELAP RTDBs were pre-populated offline with LRN totals that exceed the LRN Quantity Feature keys capacities that are currently configured for the EAGLE 5 ISS.

Example

```
    RLGHNCXA21W 03-02-07 11:02:30 EST  EAGLE 35.0.0
**  0100.0283 ** LNP 1115 DCM   LNP Ported LRNs approaching Feat Capacity
```

Alarm Level

Major

Procedure

1. Enter the following command to verify the quantity of LRNs specified for this system:

   `rtrv-ctrl-feat`

2. Either reduce the number of LRNs to the level specified by the output of step 1, or respecify the capacity with the `enable-ctrl-feat` command.

0284 - LNP Ported LRNs Capacity Normal

Description

This UAM is a clearing message that appears when the operator enables the LRN feature key quantities that exceed the quantities currently populated in the ELAP RTDBs on the EAGLE 5 ISS.

Example

```
RLGHNCXA21W 03-02-07 11:02:30 EST  EAGLE 35.0.0
0100.0284 * LNP 1115 DCM   LNP Ported LRNs Capacity Normal
```

Alarm Level

No alarm condition. The message is informational only.

Procedure

1. This message indicates a previous fault has been corrected. No further action is necessary.

0285 - LNP Ported NPAs approaching Feat. Capacity

Description

The number of LNP-ported NPANXXs is greater than the capacity that this feature supports.

This UAM appears when the DSM VSCCP cards are cold-restarted after the ELAP RTDBs were pre-populated offline with NPANXX totals that exceed the NPANXX Quantity Feature keys capacities that are currently configured for the EAGLE 5 ISS.

Example

```
    RLGHNCXA21W 03-02-07 11:02:30 EST  EAGLE 35.0.0
**  0100.0285 ** LNP 1115 DCM   LNP Ported NPAs approaching Feat. Capacity
```

Alarm Level

Major

Procedure

1. Enter the following command to verify the quantity of NPANXXs specified for this system:

   `rtrv-ctrl-feat`

2. Either reduce the number of NPANXXs to the level specified by the output of step 1, or respecify the capacity with the `enable-ctrl-feat` command.

0286 - LNP Ported NPAs Capacity Normal

Description

This UAM is a clearing message that appears when the operator enables the NPANXX feature key quantities that exceed the quantities currently populated in the ELAP RTDBs on the EAGLE 5 ISS.

Example

```
RLGHNCXA21W 03-02-07 11:02:30 EST  EAGLE 35.0.0
0100.0286  LNP 1115 DCM   LNP Ported NPAsCapacity Normal
```

Alarm Level

No alarm condition. The message is informational only.

Procedure

1. This message indicates that a previous fault has been corrected. No further action is necessary.

0287 - RTDB Table Level 2 FAK Cap Exceeded

Description

This UAM warns the customer that the total TNs in the LNP database has reached 95% of the LNP database Feature Access Key (FAK) capacity.

Example

```
   RLGHNCXA21W 03-02-07 11:02:30 EST  EAGLE 35.0.0
*C 0100.0287 *C LNP 1115 DCM   RTDB Table Level 2 FAK Cap Exceeded
                TABLE: TN        Threshold Value:                95%
                                 Exceeds 88320000 of 96000000
```

Alarm Level

Critical

Procedure

1. Enter the following command to verify the database threshold:

   `rtrv-th-alm`

   If the threshold is below 95%, go to Step 2.

2. Enter the following command :

   `chg-th-alm:lnptndblv2=xxxx`

   `where:xxxx=percentage`

3. If the threshold is at 95% contact the Tekelec Account Manager.

0288 - RTDB Table Level 1 FAK Cap Exceeded

Description

This UAM warns the customer that the total TN's in the LNP database has reached 80% of the LNP database FAK capacity.

Example

```
  RLGHNCXA21W 03-02-07 11:02:30 EST  EAGLE 35.0.0
** 0100.0288 ** LNP 1115 DCM   RTDB Table Level 1 FAK Cap Exceeded
               TABLE: TN       Threshold Value:                  80%
                               Exceeds 76800000 of 96000000
```

Alarm Level

Major

Procedure

1. Enter the following command to verify the database threshold:

   `rtrv-th-alm`

   If the threshold is below 80%, go to Step 2.

2. Enter the following command :

   `chg-th-alm:lnptndblv1=xxxx`

   `where:xxxx=percentage`

3. If the threshold is at 80% contact the Tekelec Account Manager.

0289 - RTDB Table FAK Capacity Normal

Description

This UAM appears when the associated LNP FAK alarm condition no longer exists.

Example

```
RLGHNCXA21W 03-02-07 11:02:30 EST  EAGLE 35.0.0
0100.0289  LNP 1115 DCM   RTDB Table FAK Capacity Normal
```

Alarm Level

No alarm condition. The message is informational only.

Procedure

1. This message indicates a previous fault has been corrected. No further action is necessary.

0290 - GLS is available

Description

The TSM cards configured as generic loader services (GLS) are functioning. These cards are used to download gateway screening (GWS) data to the LIMs.

Example

```
RLGHNCXA21W 00-02-07 11:02:30 EST  EAGLE 35.0.0
0100.0290    GLS SYSTEM          GLS is available
```

Alarm Level

No alarm condition. The message is informational only.

Procedure

1. This message indicates a previous condition has been corrected. No further action is necessary.

0291 - GLS is at minimum service limit

Description

Only one TSM configured for generic loader services (GLS) is in service. When this module fails, GLS is unavailable.

Generic loader services (GLS) are used to download gateway screening data to the LIMs. GLS consists of TSM cards configured with GLS software. They are only needed when LIMs or TSMs must be reloaded.

Example

```
     RLGHNCXA21W 00-02-07 11:02:30 EST  EAGLE 35.0.0
**   0100.0291 ** GLS SYSTEM          GLS is at minimum service limit
```

Alarm Level

Major

Procedure

1. Use the *rept-stat-card* command to verify status of the TSM cards providing GLS. This command identifies the cards still IS-NR (In-Service – Normal) and those cards which are out of service. For example, enter:

rept-stat-card

Following is an example of the output:

```
tekelecstp 04 11 01 07:01:36 EST EAGLE XX.XX.XX
CARD  VERSION       TYPE    APPL      PST       SST       AST
1109  125-020-000   HMUX    BPHMUX    IS-NR     Active    -----
1110  125-020-000   HMUX    BPHMUX    IS-NR     Active    -----
1113  125-020-000   GPSM    EOAM       IS-NR     Active    -----
1114  -----------   TDM     --------  IS-NR     Active    -----
1115  125-020-000   GPSM    OAM       IS-NR     Active    -----
1116  -----------   TDM     --------  IS-NR     Active    -----
1117  -----------   MDAL    --------  IS-NR     Active    -----
1201  125-020-000   LIM0CU  CCS7ITU   IS-NR     Active    -----
1202  125-020-000   LIMDS0  CCS7ITU   IS-NR     Active    M BIP ERR
1203  125-020-000   LIMDS0  SS7ANSI   IS-NR     Active    -----
1205  125-020-000   LIMDS0  CCS7ITU   IS-NR     Active    M BIP ERR
1207  125-020-000   LIMATM  ATMANSI   IS-NR     Active    -----
1209  125-020-000   HIPR    HIPR      IS-NR     Active    -----
1210  125-020-000   HIPR    HIPR      IS-NR     Active    -----
1211  125-020-000   LIMATM  ATMANSI   IS-NR     Active    ALMINH
1212  125-020-000   DSM     SCCP      IS-NR     Active    ALMINH
1213  125-020-000   DCM     IPLIM     IS-NR     Active    -----
1216  125-020-000   TSM     SCCP      IS-ANR    Standby   -----
1218  022-000-000   TSM     GLS       OOS-MT    Isolated  -----
Command Completed.
```

2. Use *init-card* command to reinitialize the card and force gateway screening (GWS) data to be downloaded from the active MASP to the TSM.

3. After GWS data has been successfully downloaded, use *rept-stat-card* to verify the card(s) have returned to service.

4. If the card(s) do not return to IS-NR, then reseat the card(s).

5. If the card(s) still do not return to IS-NR, replace the card(s).

   NOTE: See Appendix A for procedures on replacing cards.

0292 - GLS is not available

Description

Generic loading services (GLS) is not able to function; the EAGLE 5 ISS may not be performing gateway screening (GWS).

At least one card should be returned to IS-NR status. This makes GLS available and changes the alarm level to major (0291 - GLS is at minimum service limit*)*. The alarm clears after two TSM cards have returned to IS-NR.

Example

```
           RLGHNCXA21W 00-02-07 11:02:30 EST  EAGLE 35.0.0
      *C   0100.0292 *C GLS SYSTEM          GLS is not available
```

Alarm Level

Critical

Procedure

1. Use the *rept-stat-card* command to verify status of the TSM cards providing GLS. For example, enter:

rept-stat-card

Following is an example of the output:

```
RLGHNCXA03W 00-09-27 16:43:42 EST   EAGLE  35.0.0
CARD   VERSION    TYPE    APPL      PST           SST       AST
1113  022-000-000 MCAP    OAM       IS-NR         Active    -----
1114  ----------- TDM     --------  -----         -----     -----
1115  022-000-000 MCAP    OAM       IS-NR         Standby   -----
1116  ----------- TDM     --------  -----         -----     -----
1117  ----------- MDAL    --------  IS-NR         Standby   -----
1204  022-000-000 LIMOCU  SS7ANSI   OOS-MT        Isolated  -----
1205  022-000-000 LIMOCU  SS7ANSI   IS-NR         Active    -----
1206  022-000-000 LIMOCU  SS7ANSI   OOS-MT        Isolated  -----
1207  022-000-000 LIMOCU  SS7GX25   OOS-MT        Isolated  -----
1211  022-000-000 LIMV35  SS7GX25   IS-NR         Active    -----
1212  022-000-000 ACMENET STPLAN    IS-NR         Active    -----
1216  022-000-000 TSM     SCCP      IS-ANR        Standby   -----
1218  022-000-000 TSM     GLS       OOS-MT        Isolated  -----
1312  022-000-000 LIMDS0  SS7ANSI   IS-NR         Active    -----
1313  022-000-000 LIMOCU  SS7ANSI   OOS-MT        Idle      -----
Command Completed.
```

2. Use *init-card* command to reinitialize the card and force gateway screening (GWS) data to be downloaded from the active MASP to the TSM.

3. The following message should appear.

```
RLGHNCXA03W  00-02-07  11:11:28 EST  EAGLE 35.0.0
Init Card command issued to card 1218
```

---

4. After GWS data has been successfully downloaded, use *rept-stat-card* to verify the card(s) have returned to service.

---

5. If the card(s) do not return to IS-NR, then reseat the card(s).

---

6. If the card(s) still do not return to IS-NR, replace the card(s).

NOTE: See Appendix A for procedures on replacing cards.

0293 - GLS have been removed from the system

Description

Generic loading services (GLS) has been removed from the system, because all TSMs configured for GLS have been deleted through database administration commands.

Example

```
RLGHNCXA21W 00-02-07 11:02:30 EST  EAGLE 35.0.0
0100.0293    GLS SYSTEM          GLS have been removed from the system
```

Alarm Level

No alarm condition. The message is informational only.

Procedure

1. This message alerts the user that all TSMs configured for GLS have been deleted from the system. No action is necessary unless gateway screening is required.

0294 - REPT-ALMINH: alarm output PERM inhibit

Description

This message indicates that alarms for the indicated device are permanently inhibited at the indicated level.

Example

```
tekelecstp 99-01-19 14:56:48 EST  EAGLE 35.0.0
0100.0294   CARD 1117 MDAL        REPT-ALMINH: alarm output PERM inhibit
            ALARM INHIBIT LEVEL:   CRIT
```

NOTE: The output can vary significantly. Alarm Inhibit alarms are generic and the output varies depending on which alarm/device is inhibited. This example utilizes the CARD format.

Alarm Level

No alarm condition. The message is informational only.

Procedure

1. No further action is necessary.

0295 - REPT-ALMINH: alarm output enabled

Description

This message indicates the restoration of the reporting of alarms for the indicated device at the indicated level.

Example

```
RLGHNCXA21W 00-02-07 11:02:30 EST  EAGLE 35.0.0
0100.0295    NDC SYSTEM            REPT-ALMINH: alarm output enabled
             ALARM INHIBIT LEVEL:   MAJR
```

NOTE: The output can vary significantly. Alarm Inhibit alarms are generic and the output varies depending on which alarm/device is inhibited. This example utilizes the NDC SYSTEM format.

Alarm Level

No alarm condition. The message is informational only.

Procedure

1. No further action is necessary.

0296 - REPT-ALMINH: alarm output TEMP inhibit

Description

This message indicates that alarms for the indicated device are temporarily inhibited at the indicated level.

Example

```
tekelecstp 99-01-19 14:56:48 EST  EAGLE 35.0.0
0045.0296   DLK 1104,A1          REPT-ALMINH: alarm output TEMP Inhibit
            ALARM INHIBIT LEVEL:   MINR
```

NOTE: The output can vary significantly. Alarm Inhibit alarms are generic and the output varies depending on which alarm/device is inhibited. This example utilizes the DATA LINK format.

Alarm Level

No alarm condition. The message is informational only.

Procedure

1. No further action is necessary.

0297 - Incorrect port configuration

Description

This message indicates that a MPL card with more than ports A and B provisioned has been replaced with a 2 port DS0-A LIM card. This alarm is also generated if an MPL card is placed in a LIM slot which has either port A or port B provisioned as non-56K bps link speed.

Example

```
    RLGHNCXA21W 00-02-07 11:02:30 EST  EAGLE 35.0.0
**  0100.0297  ** CARD 1108  SS7ML     Incorrect LIM port configuration
                  HW VERIFICATION CODE: xxx
```

Alarm Level

Major

Procedure

1. If this message contains the optional line 'HW VERIFICATION CODE: xxx':

- Go to Appendix E, Auto-Inhibit HW Verification Codes, and decode the xxx value in Table E-1. Correct the indicated problem.
- After correcting the problem, the card will be in *out-of-service maintenance disabled state* (OOS-MT-DSBLD). Restore the card back to *in-service normal state* (IS-NR) with the `alw-card` command.

2. If this message does not contain the optional line 'HW VERIFICATION CODE: xxx', perform either of the following:

- Replace the LIM DS0-A card with an MPL card.

OR

- This card has only 2 ports. Re-provision this DS0-A card and provision only ports A and B. Refer to the *Database Administration Manual - SS7* for the correct procedures.

NOTE: See Appendix A for details about replacing cards.

0298 - Card not using config. SCTP csum method

Description

The IPLIMx/IPGWx card issues this UAM alarm when the card's active SCTP checksum algorithm does not match the configured SCTP checksum algorithm in the IP OPTIONS table.

Example

```
     RLGHNCXA21W 03-02-07 11:02:30 EST  EAGLE 35.0.0
**   0100.0298  * CARD  1115 DCM   Card not using config. SCTP csum method
```

Alarm Level

Minor

Procedure

1. The SCTP checksum algorithm option is configured via the `chg-sg-opts` command and is stored in the IP OPTIONS table. The update applies to the IP OPTIONS tables on disk and IPLIMx/IPGWx card memory.

   Note that when the SCTP checksum algorithm is updated, IPLIMx/IPGWx cards may not immediately change to the updated checksum algorithm. Before IPLIMx/IPGWx cards can use the configured SCTP checksum algorithm, one of the following conditions must exist.

   - No SCTP associations exist on the IPLIMx/IPGWx card.
   - All SCTP associations provisioned on the IPLIMx/IPGWx card are `open=no`.
   - The IPLIMx/IPGWx card is initialized.

2. In an installed system, use either of two methods to condition the cards to accept the change in checksum algorithms:

   - Card initialization (use the `init-card` command) or
   - Change card association (`chg-assoc:aname=xxx:open=no`)

   For details about these commands, refer to the *Commands Manual*.

3. Issue the `chg-sg-opts:sctp_csum=`*`value`* command to define the checksum algorithm to be used in all SCTP associations.

0299 - Config. SCTP csum method alarm cleared

Description

The SCTP checksum UAM alarm is cleared when the card's active SCTP checksum algorithm matches the configured SCTP checksum algorithm.

Example

```
     RLGHNCXA21W 03-02-07 11:02:30 EST  EAGLE 35.0.0
**   0100.0299    CARD  1115 DCM   Config. SCTP csum method alarm cleared
```

Alarm Level

No alarm condition. The message is informational only.

Procedure

1. No further action is necessary.

0300 -TVG Grant Failure

Description

This message indicates that for some card in the system, the grant mechanism (as part of the Multicast Capacity Feature) failed for at least 60 seconds, or more than one time for a 15-second period. A TVG granter failure is defined as a TVG request that completes with a time-out (hardware or software) and/or a status value where the Granter Present bit is not set.

Example

```
    RLGHNCXA21W 00-02-07 11:02:30 EST  EAGLE 35.0.0
**  0100.0300  ** CARD 1201  OAM     TVG Grant Failure
```

Alarm Level

Major

Procedure

1. Enter the following command to verify the status of the TVG granter:

*rept-stat-card:loc=***xxxx***:mode=full*

where **xxxx** is the card location identified in the output.

Following is an example of the output:

```
RLGHNCXA03W  00-02-04 15:10:19 EST EAGLE 35.0.0
CARD   VERSION      TYPE    APPL       PST            SST        AST
1201   023-001-000  LIMATM  ATMANSI    IS-NR          Active     -----
  ALARM STATUS       = No Alarms.
  IMT VERSION        = 023-001-000
  PROM VERSION       = 023-001-000
  IMT BUS A          = Conn
  IMT BUS B          = Conn
  CLOCK A            = Idle
  CLOCK B            = Active
  CLOCK I            = Idle
  MBD BIP STATUS     = valid
  DB STATUS          = valid
  DBD MEMORY SIZE    = 0M
  SLK A PST          = OOS-MT          LS=ls1201    CLLI=-----------
  SLK B PST          = OOS-MT          LS=ls1201    CLLI=-----------
  SCCP SERVICE CARD  = ----
  SLAN SERVICE CARD  = ----
  SCCP TVG RESULT    = 24 hr: GDNHSI, 5 min: GDNHSI
  SLAN TVG RESULT    = 24 hr: -D-H-I, 5 min: -D-H-I
  SNM  TVG RESULT    = 24 hr: GDNHSI, 5 min: ------
Command Completed.
```

2. The group ticket voucher status is displayed in these fields: **SCCP TVG RESULT** (for SCCP messages), **SLAN TVG RESULT** (for STPLAN messages), and **SNM TVG RESULT** (for SNM messages). Group ticket voucher status output is displayed as a series of these letters:

   G – Service Granted. Indicates normal system behavior.

   D – Service Denied. Indicates an overload, but the group ticket voucher hardware and software are working correctly.

   N – No granter in the system. For GTT or STPLAN traffic, there may be no TSM-SCCP cards or ACMs in the system. If there are TSM-SCCP cards or ACMs in the system, then a serious failure is indicated (hardware or software bug or hardware failure).

   H – Hardware time-out. Indicates the hardware timed out waiting for a group ticket voucher packet to return. Group ticket voucher packets can be lost when a card is plugged in or booted. This is a serious condition if cards have not been connecting or disconnecting from the IMT.

   S – Software time-out. No result was ever returned from hardware, indicating a probable hardware failure.

   I – Invalid result from hardware.

0301 -TVG Grant Recovery

Description

This message indicates that the Multicast Capacity Feature for handling SNM, SCCP, or SLAN traffic is functioning, and a previous problem has cleared.

Example

```
RLGHNCXA21W 00-02-07 11:02:30 EST  EAGLE 35.0.0
0100.0301     CARD 1201  OAM    TVG Grant Recovery
```

Alarm Level

No alarm condition. The message is informational only.

Procedure

1. No further action is necessary.

0302 - Cooling fan failure

Description

The cooling fan hardware is not working.

Example

```
           RLGHNCXA21W 00-02-07 11:02:30 EST  EAGLE 35.0.0
     *     0100.0302  *  SYSTEM       Cooling fan failure
```

Alarm Level

Minor

Procedure

1. At the fan assembly, verify that the Fan Switch on the grill panel is in the ON position.

2. At the FAP, verify the fuses for the fan assembly. The fuse card will be marked FAN A and FAN B, fuse positions 6, 12, and 18 (A and B).

- Fuse position 6 is for the fan unit directly below the control shelf.
- Fuse position 12 is for the fan directly below the 1200 shelf.
- Fuse position 18 is for the fan directly below the 1300 shelf.

All fans are to be fused at 2 amps (with orange flags) (3 amps for the HC MIM fan) per feed.

3. At the EAGLE 5 ISS terminal, enter the following command to verify that the fan feature is turned on.

rtrv-feat

NOTE: Once you have turned on the feature, you cannot turn it off. The feature applies to any and all fans installed within the system. When replacing a fan assembly, the feature should already be turned on.

The output displays a list of optional features and their status on the system:

```
RLGHNCXA03W 99-01-28 11:34:04 EST EAGLE 35.0.0
EAGLE FEATURE LIST
GTT = off
GWS = on
CRMD = off
X25G = on
LAN = on
SEAS = on
LNP = off
LNP12MIL = off
FAN = on
DSTN4000 = on
WNP = on
CNCF = on
SCCPCNV = on
TCAPCNV = on
TLNP = on
x252000 = on
```

---

4. If **FAN = on** does not appear in the output, enable the fan feature by entering the following command:

chg-feat:fan=on

After the program updates, the system returns output similar to the following:

```
RLGHNCXA03W 97-03-11 11:34:04 EST EAGLE 35.0.0
CHG-FEAT: MASP A - COMPLD
```

---

5. At the rear of the frame, verify the A power cable from the A fan assembly is securely attached.

---

6. At the rear of the frame, verify the B power cable from the B fan assembly is securely attached.

---

7. At the EAGLE 5 ISS terminal, type in this command:

rept-stat-trbl

If the EAGLE 5 ISS reports the following alarm, replace the cooling fan.

```
302 COOLING FAN FAILURE.
```

NOTE: See Appendix A for replacement procedure.

The hierarchy of maintenance activity is based on Table 3-20.

Table 3-20. Maintenance Activity Hierarchy

Condition	Cntrl. LED	FAN 1 LED	FAN 2 LED	FAN 3 LED	Alarm Status	Actions
Normal Operation	Green	Green	Green	Green	No Alarm**	None
A power feed fail	Blink	RED			Alarm*	Check the fuse, the power source, and cables
Interconnect card OR circuit fail	Blink		RED		Alarm*	Check the fuse, the power source, and cables
B power feed fail	Blink			RED	Alarm*	Check the fuse, the power source, and cables
Fan 1 fail	Green	RED			Alarm*	**1.** Make sure that there is A power **2.** Make sure that there is B power and that Fan 2 and Fan 3 are operating properly. **3.** Replace the fan.
Fan 2 fail	Green		RED		Alarm*	**1.** Make sure that there is both A and B power **2.** Make sure that Fan 1 and Fan 3 are operating properly **3.** Replace the fan

Table 3-20. Maintenance Activity Hierarchy (Continued)

Condition	Cntrl. LED	FAN 1 LED	FAN 2 LED	FAN 3 LED	Alarm Status	Actions
Fan 3 fail	Green			RED	Alarm*	**1.** Make sure that there is B power **2.** Make sure that there is A power and that Fan 1 and Fan 2 are operating properly **3.** Replace the fan
Fan 1 Removed	Green	Blink			Alarm*	**1.** Make sure that the fan is seated properly **2.** Replace the fan
Fan 2 Removed	Green		Blink		Alarm*	**1.** Make sure that the fan is seated properly **2.** Replace the fan
Fan 3 Removed	Green			Blink	Alarm*	**1.** Make sure that the fan is seated properly **2.** Replace the fan
Controller card partial fail	RED				Alarm*	**1.** Make sure there is both A and B power. **2.** Make sure the fans are working properly **3.** Remove fan 1 **4.** Replace the Fan Tray Controller

Table 3-20. Maintenance Activity Hierarchy (Continued)

Condition	Cntrl. LED	FAN 1 LED	FAN 2 LED	FAN 3 LED	Alarm Status	Actions
Controller card fail	OFF	OFF	OFF	OFF	Alarm*	**1.** Make sure there is both A and B power. **2.** Make sure the fans are working properly **3.** Remove fan 1. **4.** Replace the Fan Tray Controller
Interconnect Failure - replace shelf						

*If there is no alarm when for this condition it is likely that the relay on the Interconnect card has failed (open)

**If there is an alarm when all 4 LEDs are green it is likely that the relay on the Interconnect card has failed (closed)

[Try replacing the controller before replacing the fan tray]

Maintenance Order

1. Check to make sure there is both A and B power.

2. Check the fans

3. Check the controller card for proper operation (as a minimum B power must be present and good fans for fan 2 and fan 3 must be installed before removing the controller)

4. Replace the fan tray only after checking power, fans, and control card

If the condition in number 4 above occurs call the Customer Care Center for assistance.

0303 - Cooling fan normal

Description

The cooling fan hardware has returned to service.

Example

```
RLGHNCXA21W 00-02-07 11:02:30 EST  EAGLE 35.0.0
0100.0303     SYSTEM      Cooling fan normal
```

Alarm Level

No alarm condition. The message is informational only.

Procedure

1. This message indicates a previous fault has been corrected. No further action is necessary.

0304 - REPT-NMTSK-DSCD: SNM Discard Onset

Description

This message indicates that the number of system network messages has exceeded the threshold and messages are being discarded.

Example

```
     RLGHNCXA21W 00-02-07 11:02:30 EST  EAGLE 35.0.0
*    0100.0304   *   CARD 1113 OAM     REPT-NMTSK-DSCD: SNM Discard Onset
```

Alarm Level

Minor

Procedure

1. Check for problems in the network that would cause excessive network management messages to be broadcast.

0305 - RECVY-NMTSK-DSCD: SNM Discard Abated

Description

This message indicates that network messages are no longer being discarded.

Example

```
RLGHNCXA21W 00-02-07 11:02:30 EST  EAGLE 35.0.0
0100.0305      CARD 1113 OAM      REPT-NMTSK-DSCD: SNM Discard Abated
```

Alarm Level

No alarm condition. The message is informational only.

Procedure

1. This message indicates a previous condition has been corrected. No further action is necessary.

0306 - SNM Overload Onset

Description

This message indicates that network management messages are approaching the threshold where they will be discarded.

Example

```
     RLGHNCXA21W 00-02-07 11:02:30 EST  EAGLE 35.0.0
*    0100.0306   *   CARD 1113 EOAM        SNM Overload Onset
```

Alarm Level

Minor.

Procedure

1. Check for problems in the network that would cause excessive network management messages to be broadcast.

0307 - SNM Overload Abated

Description

This message indicates that the threat of network messages being discarded no longer exists.

Example

```
RLGHNCXA21W 00-02-07 11:02:30 EST  EAGLE 35.0.0
0100.0307    CARD 1113 OAM        SNM Overload Abated
```

Alarm Level

No alarm condition. The message is informational only.

Procedure

1. This message indicates a previous condition has been corrected. No further action is necessary.

0308 - Node isolated due to SLK failures

Description

The EAGLE 5 ISS is isolated from other signaling points. All system links are down. Possible causes are as follows:

- Primary and secondary clock sources have failed
- Signaling links have been manually cancelled
- All cards have been manually inhibited
- Both IMT busses have failed

Example

```
     RLGHNCXA21W 00-02-07 11:02:30 EST  EAGLE 35.0.0
*C   0100.0308 *C SYSTEM            Node isolated due to SLK failures
```

Alarm Level

Critical

Procedure

1. Call Tekelec Technical Services at the appropriate number.

Reference: “Customer Care Center” on page 1-13

2. Restore the signaling links to service by entering the following:

act-slk:loc=xx:port=x

The following message should appear:

```
RLGHNCXA03W  00-02-07  11:11:28 EST  EAGLE 35.0.0
Activate SLK message sent to card
```

3. Enter the following to restore the cards

rst-card:loc=xxxx

NOTE: The card locations (*xxxx*) must be specified and the command repeated for each card.

Automatic recovery of the SLKs should occur.

4. Activate measurements using the *chg-meas:collect=on* command. This starts measurements collection.

   NOTE: See Chapter 4, "Measurements," for traffic measurements information.

0309 - Node is no longer isolated

Description

This message occurs when the node has been in node isolation due to signaling link failures. Enough links have recovered so that the node is no longer isolated and signaling can occur.

Example

```
RLGHNCXA21W 00-02-07 11:02:30 EST  EAGLE 35.0.0
0100.0309    SYSTEM              Node is no longer isolated
```

Alarm Level

No alarm condition. The message is informational only.

Procedure

1. This message indicates a previous fault has been corrected. No further action is necessary.

0311 - DPC is allowed

Description

A previous fault is corrected and the EAGLE 5 ISS system can send traffic to a specified point code.

Example

```
RLGHNCXA21W 00-02-07 12:01:43 EST  EAGLE 35.0.0
0014.0311    DPC 144-201-001     DPC is allowed
             LSN=nc00027
             Prohibited SS  1, 5, 18
             Allowed SS     3, 6
             Blocked SS     100, 103
             Unblocked SS   2, 102, 221
```

Legend

Allowed SS	Allowed subsystem
Blocked SS	Blocked subsystem
LSN	Linkset name. The name must be unique.
Prohibited SS	Prohibited subsystem
Unblocked SS	Unblocked subsystem

Alarm Level

No alarm condition. The message is informational only.

Procedure

1. This message indicates a previous fault has been corrected. No further action is necessary.

0312 - DPC is restricted

Description

A transfer-restricted message has been received concerning the DPC. Possible causes:

- One or more routes to this DPC are unavailable.
- A low priority route is carrying the traffic. The primary and combined routes are not available for traffic to the given DPC.

Example

```
     RLGHNCXA21W 00-02-07 12:01:43 EST  EAGLE 35.0.0
*    0014.0312  * DPC 144-201-001     DPC is restricted
                  LSN=nc00027
                  Prohibited SS  1, 5, 18
                  Allowed SS     3, 6
                  Blocked SS     100, 103
                  Unblocked SS   2, 102, 221
```

Legend

Allowed SS	Allowed subsystem
Blocked SS	Blocked subsystem
LSN	Linkset name. The name must be unique.
Prohibited SS	Prohibited subsystem
Unblocked SS	Unblocked subsystem

Alarm Level

Minor

Procedure

1. Enter the *rept-stat-rte* command using the DPC specified from the output message to determine which linkset has a problem.

2. Enter the *rept-stat-ls* using the linkset name specified from the output of step 1 to determine which link(s) could have a problem.

3. Use local procedures to test the link facilities.

0313 - DPC is prohibited

Description

Traffic to the DPC is prohibited. Possible causes:

- All routes to this DPC are unavailable.
- Adjacent point code link failures or nonadjacent failure in the route.

Example

```
     RLGHNCXA21W 00-02-07 12:01:43 EST  EAGLE 35.0.0
*C   0014.0313 *C DPC 144-201-001     DPC is prohibited
                  LSN=nc00027
                  Prohibited SS  1, 5, 18
                  Allowed SS     3, 6
                  Blocked SS     100, 103
                  Unblocked SS   2, 102, 221
```

Legend

Allowed SS	Allowed subsystem
Blocked SS	Blocked subsystem
LSN	Linkset name. The name must be unique.
Prohibited SS	Prohibited subsystem
Unblocked SS	Unblocked subsystem

Alarm Level

Critical

Procedure

1. Enter the *rept-stat-rte* command using the DPC specified from the output message to determine which linkset has a problem.

2. Enter the *rept-stat-l*s using the linkset name specified from the output of step 1 to determine which link(s) could have a problem.

3. Use local procedures to test the link facilities.

0314 - Route is allowed

Description

The primary route to the DPC (through the exception route set, if so indicated) can carry traffic.

Example of Normal Route Alarm

```
RLGHNCXA21W 00-02-07 12:01:43 EST  EAGLE 35.0.0
0014.0314    DPC 144-201-001     Route is allowed
             LSN=nc00027
```

Example of Exception Route Alarm

```
RLGHNCXA21W 06-05-11 17:41:11 EST  EAGLE 35.0.0
0014.0314    RTX 001-101-001     Route is allowed
             LSN=nc00025
             ILSN=lsn012345
```

Legend

LSN	Linkset name. The name must be unique.
ILSN	Incoming linkset name

Alarm Level

No alarm condition. The message is informational only.

Procedure

1. No action is necessary.

0315 - Route is restricted

Description

Traffic to the DPC (through the exception route, if so indicated) is restricted. This could indicate signaling link failures for a nonadjacent DPC.

Example of Normal Route Alarm

```
RLGHNCXA21W 00-02-07 12:01:43 EST  EAGLE 35.0.0
0014.0315    DPC 144-201-001     Route is restricted
             LSN=nc00027
```

Example of Exception Route Alarm

```
RLGHNCXA21W 06-05-11 17:41:11 EST  EAGLE 35.0.0
0014.0315    RTX 001-101-001     Route is restricted
             LSN=nc00025
             ILSN=lsn012345
```

Legend

LSN	Linkset name. The name must be unique.
ILSN	Incoming linkset name

Alarm Level

No alarm condition. The message is informational only.

Procedure

1. Contact the customer to test and correct the problem.

0316 - Route is prohibited

Description

The primary route to the DPC (through the exception route, if so indicated) cannot carry traffic. Following are the possible causes:

- Local SLK failures
- Nonadjacent DPC SLK failures

Example of Normal Route Alarm

```
RLGHNCXA21W 00-02-07 12:01:43 EST  EAGLE 35.0.0
0014.0316    DPC 144-201-001     Route is prohibited
             LSN=nc00027
```

Example of Exception Route Alarm

```
RLGHNCXA21W 06-05-11 17:41:11 EST  EAGLE 35.0.0
0014.0316    RTX 001-101-001     Route is prohibited
             LSN=nc00025
             ILSN=lsn012345
```

Legend

LSN	Linkset name. The name must be unique.
ILSN	Incoming linkset name

Alarm Level

No alarm condition. The message is informational only.

Procedure

1. Enter the following command using the DPC specified from the output message to determine which linkset has the problem:

rept-stat-rte:aaaa=xxx-xxx-xxx

If the route is an exception route, enter the following command using both the DPC and class/criterion to determine the linkset:

rept-stat-rtx:aaaa=xxx-xxx-xxx:cccc=zzzz

where: aaaa = dpc/dpca, dpci, dpcn, or dpcn24
xxx-xxx-xxx = the specified destination point code
cccc = opc/opca, opci, opcn, opcn24, ilsn, cic, or si
zzzz = the specified value of the above exception class, that establishes the exception routing criterion.

2. If it appears to be a local signaling link failure enter the following command using the linkset name specified from the output of Step 1 to determine which link(s) could have a problem:

*rept-stat-l*s

3. Verify the link status using the *rept-stat-slk* command. For example, enter:

rept-stat-slk:loc=:port=b

Following is an example of the output:

```
RLGHNCXA03W 00-09-27 17:00:36 EST  EAGLE 35.0.0
SLK     LSN          CLLI         PST           SST        AST
1203,B  nsp1         ls02clli     OOS-MT        Unavail     ----
  ALARM STATUS       =  No alarm
  UNAVAIL REASON     =  FL NA LI RI
Command Completed.
```

4. Check the *UNAVAIL REASON* field in the output of the *rept-stat-slk* command. Following is an explanation of the *UNAVAIL REASON* codes:

FL – The signaling link has a fault.

NA – The signaling link is not aligned.

LI – The signaling link has been inhibited locally

RI – The signaling link has been inhibited remotely.

LB – The signaling link has been blocked locally.

RB – The signaling link has been blocked remotely.

FC – The signaling link is unavailable because of false congestion.

RD(xx.xxx) - The signaling link is unavailable because of a restart delay to prevent signaling link oscillation. The number in parentheses indicates the amount of time, in seconds, remaining in the restart delay period. The link is restarted automatically after this amount of time has elapsed.

---

5. If the *UNAVAIL REASON* indicates an alignment problem or fault, activate a loopback using the *act-lpb* command, or use a physical loopback. (For a V.35, you must use an appropriate physical V.35 loopback.) If the signaling link aligns, contact the far-end to correct the problem.

---

6. If the *UNAVAIL REASON* still indicates an alignment problem or fault, check the status of the card by entering the *rept-stat-card* command for the specified card.

---

7. If the *rept-stat-card* command indicates a problem with the card, reset the card by entering the *init-card* command with the specified card location. If the card still does not align, try first reseating the card, then replacing the card (using the card replacement procedures in Appendix A, *Card Removal/Replacement Procedures*).

---

8. If the *UNAVAIL REASON* indicates a locally inhibited link, enter the following command with the specified card location:

unhb-slk

---

9. If the *UNAVAIL REASON* indicates a locally blocked link, enter the following command with the specified card location:

ublk-slk

---

10. If the signaling is blocked or inhibited remotely, contact the far-end to place the link in-service.

0317 - RCVRY-LKSTO: Link set allowed

Description

The linkset is returned to service.

Example

```
RLGHNCXA21W 00-02-07 12:01:43 EST  EAGLE 35.0.0
0014.0317    LSN a24546     RCVRY-LKSTO: Link set allowed
```

Alarm Level

No alarm condition. The message is informational only.

Procedure

1. This message indicates a previous fault is corrected. No further action is necessary.

0318 - REPT-LKSTO: Link set prohibited

Description

This message indicates a linkset is out of service.

Example

```
        RLGHNCXA21W 00-02-07 12:01:43 EST  EAGLE 35.0.0
**      0014.0318 **   LSN a54646     REPT-LKSTO: Link set prohibited
```

Alarm Level

Major

Procedure

1. Verify the link status using the *rept-stat-slk* command. For example, enter:

rept-stat-slk:loc=1203:port=b

Following is an example of the output:

```
RLGHNCX A03W 00-02-07 12:02:36 EST  EAGLE 35.0.0
SLK     LSN          CLLI         PST           SST        AST
1203,B  nsp1         ls02clli     OOS-MT        Unavail     ----
   ALARM STATUS       =  No alarm
   UNAVAIL REASON     =  FL NA LI RI
Command Completed.
```

2. Check the *UNAVAIL REASON* field in the output of the *rept-stat-slk* command. Following is an explanation of the *UNAVAIL REASON* codes:

FL – The signaling link has a fault.

NA – The signaling link is not aligned.

LI – The signaling link has been inhibited locally

RI – The signaling link has been inhibited remotely.

LB – The signaling link has been blocked locally.

RB – The signaling link has been blocked remotely.

FC – The signaling link is unavailable because of false congestion.

RD(xx.xxx) – The signaling link is unavailable because of a restart delay to prevent signaling link oscillation. The number in parentheses indicates the amount of time, in seconds, remaining in the restart delay period. The link is restarted automatically after this amount of time has elapsed.

3. If the *UNAVAIL REASON* indicates an alignment problem or fault, activate a loopback using the *act-lpb* command, or use a physical loopback. (For a V.35, you must use an appropriate physical V.35 loopback.) If the signaling link aligns, contact the far-end to correct the problem.

---

4. If the *UNAVAIL REASON* still indicates an alignment problem or fault, check the status of the card by entering the *rept-stat-card* command for the specified card.

---

5. If the *rept-stat-card* command indicates a problem with the card, reset the card by entering the *init-card* command with the specified card location. If the card still does not align, try first reseating the card, then replacing the card (using the card replacement procedures in Appendix A, *Card Removal/Replacement Procedures*).

---

6. If the *UNAVAIL REASON* indicates a locally inhibited link, enter the *unhb-slk* command with the specified card location.

---

7. If the *UNAVAIL REASON* indicates a locally blocked link, enter the *ublk-slk* command with the specified card location.

---

8. If the signaling is blocked or inhibited remotely, contact the far-end to place the link in-service.

0319 - REPT-MTPLP-DET: Circ rte det(cong)

Description

The system automatically tests for circular routing when congestion occurs on an ANSI signaling link. If the routing data was provisioned incorrectly, or was corrupted, MSUs could be routed in an endless circular route. The incorrect routing data could be on the system or at a remote STP.

Example of Normal Route Alarm

```
    RLGHNCXA21W 00-02-07 12:01:43 EST  EAGLE 35.0.0
*C  0014.0319 *C DPC 011-20-*       REPT-MTPLP-DET: Circ rte det(cong)
                 XMIT LSN=ls01   RC=10
                 RCRV    LSN=lsnabcde1
                 MEMBER= 011-210=007
```

Example of Exception Route Alarm

```
   RLGHNCXA21W 06-05-11 17:41:11 EST  EAGLE 35.0.0
*C  0014.0319 *C RTX 001-101-001     REPT-MTPLP-DET: Circ rte det(cong)
                 OPCA=   007-001-000
                 XMIT LSN=ls04   RC=20
                 RCV LSN=lsna05
                 MEMBER=0011-210-004
```

Alarm Level

Critical

Procedure

1. Enter the following command to check the routing information for the specified route or exception route:

   rtrv-rte:aaaa=xxx-xxx-xxx (normal route)

   rtrv-rtx:aaaa=xxx-xxx-xxx:cccc=zzzz (exception route)

   where: *aaaa = dpc/dpca, dpci, dpcn, or dpcn24*
   xxx-xxx-xxx = the specified destination point code
   cccc = opc/opca, opci, opcn, opcn24, ilsn, cic, or si
   zzzz = the specified value of the above exception class, that establishes the exception routing criterion.

   If the problem is in the routing table of an adjacent node, contact the node (identified in the above command output) to resolve the circular routing problem.

If the routing information is correct, continue with Step 4.
If there is an error in the routing information, continue with Step 2.

2. Enter the following command to delete the route (or exception route) in the error message from the database:

dlt-rte:aaaa=xxx-xxx-xxx:lsn=yyyy (normal route)
dlt-rtx:aaaa=xxx-xxx-xxx:lsn=yyyy:cccc=zzzz (exception route)

where *aaaa = dpc/dpca, dpci, dpcn, or dpcn24*
xxx-xxx-xxx = the specified destination point code
yyyy = the linkset name associated with the route
zzzz=the specified value of the above exception class, that establishes the routing criterion

3. Refer to the *Database Administration Manual - SS7* and the following procedures for adding a route:

Adding a Route Containing an SS7 DPC

Adding a Route Containing a Cluster Point Code

Adding a Route Containing an IPGWx Linkset

Adding a Route Containing an X.25 DPC

Refer to the *Database Administration Manual - SS7* and the following procedure for adding an exception route:

Adding an Exception Route Entry

4. Enter the following command to reset the destination circular routing status:

rst-dstn:dpc=xxx-xxx-xxx

where *xxx-xxx-xxx* = the destination point code of the destination.

0320 - REPT-MTPLP-SUST: Sustained circ rt(cong)

Description

The system automatically tests for circular routing when congestion occurs on an ANSI signaling link. If the routing data was provisioned incorrectly, or was corrupted, MSUs could be routed in an endless circular route. The incorrect routing data could be on the system or at a remote STP.

Example of Normal Route Alarm

```
    RLGHNCXA21W 00-02-07 12:01:43 EST  EAGLE 35.0.0
*C  0014.0320 *C DPC 144-201-001       REPT-MTPLP-SUST: Sustained circ rt(cong)
                 XMIT LSN=ls02   RC=10
                 RCRV    LSN=lsnb02
                 MEMBER= 011-210=001
```

Example of Exception Route Alarm

```
   RLGHNCXA21W 06-05-11 17:41:11 EST  EAGLE 35.0.0
*C  0014.0320 *C RTX 001-101-001     REPT-MTPLP-SUST: Sustained circ rt(cong)
                 CIC=0   ECIC=1000
                 XMIT LSN=ls03   RC=20
                 RCV LSN=lsna07
                 MEMBER=0011-210-003
```

Alarm Level

Critical

Procedure

1. Enter the following command to check the routing information for the specified route or exception route:

rtrv-rte:aaaa=xxx-xxx-xxx (normal route)
rtrv-rtx:aaaa=xxx-xxx-xxx:cccc=zzzz (exception route)

where *aaaa = dpc/dpca, dpci, dpcn, or dpcn24*
xxx-xxx-xxx = the specified destination point code
cccc = opc/opca, opci, opcn, opcn24, ilsn, cic, or si
zzzz = the specified value of the above exception class, that establishes the exception routing criterion.

If the problem is in the routing table of an adjacent node, contact the node (identified in the above command output) to resolve the circular routing problem.

If the routing information is correct, continue with Step 4.
If there is an error in the routing information, continue with Step 2.

---

2. Enter the following command to delete the route (or exception route) in the error message from the database:

dlt-rte:aaaa=xxx-xxx-xxx:lsn=yyyy (normal route)
dlt-rtx:aaaa=xxx-xxx-xxx:lsn=yyyy:cccc=zzzz (exception route)

where *aaaa = dpc/dpca, dpci, dpcn, or dpcn24*
xxx-xxx-xxx = the specified destination point code
yyyy = the linkset name associated with the route
zzzz=the specified value of the above exception class, that establishes the routing criterion

---

3. Refer to the *Database Administration Manual - SS7*, Chapter 5 - SS7 Configuration and the procedure titled Adding a Route for the procedure on entering the correct route information.

---

4. Enter the following command to reset the destination circular routing status:

rst-dstn:dpc=xxx-xxx-xxx

where *xxx-xxx-xxx* = the destination point code of the destination.

0321 - X-LIST occupancy threshold exceeded

Description

This message indicates that the number of x-list entries has exceeded a specified threshold.

Example

```
     RLGHNCXA21W 00-12-07 12:01:43 EST  EAGLE 35.0.0
 *   0014.0321  *  XLIST             X-LIST occupancy threshold exceeded
```

Alarm Level

Minor

Procedure

1. To display the system-wide parameters for cluster routing, enter the *rtrv-stpopts* command. Following is an example of the output:

```
RLGHNCXA03W  00-07-23  16:02:34 EST  EAGLE. 35.0.0   STP OPTIONS
-------------------------
MTPT31CTL               1
MTPLT1                yes
MTPLTCTDPCQ             3
MTPLTST             10000
MTPXLQ                500
MTPXLET              0100
MTPXLOT               90%
MTPDPCQ              2000
TFATFRPR             1000
MTPRSI                yes
MTPRSIT              5000
```

The *mtpxlq* parameter is the total number of dynamic status exception list (x-list) entries the EAGLE 5 ISS maintains. There are 2500 total table entries. The default values allow for 2000 entries for provisioned destinations and 500 for x-list entries. (If you increase the number of x-list entries, you must decrease the number of DPCs that can be provisioned by changing the `mtpdpcq` parameter.)

The *mtpxlet* parameter is the maximum amount of time the EAGLE 5 ISS maintains an unreferenced x-list entry.

The *mtpxlot* parameter is the threshold that this message refers to.

2. Use the *chg-stpopts* to change the number of x-list entries, the x-list expiration timer, or to raise the threshold for notification of a full x-list.

3. If the problem persists, use the *dact-rstst* command to eliminate specific x-list entries.

0322 - X-LIST occupancy below threshold

Description

This message indicates that the number of x-list entries has fallen below a specified threshold.

Example

```
RLGHNCXA21W 00-12-07 12:01:43 EST  EAGLE 35.0.0
0014.0322    XLIST              X-LIST occupancy below threshold
```

Alarm Level

No alarm condition. The message is informational only.

Procedure

1. This message indicates a previous fault has been corrected. No further action is necessary.

0324 - DPC subsystem is allowed

Description

All subsystems at the indicated DPC are reachable.

Example

```
RLGHNCXA21W 00-02-07 12:01:43 EST  EAGLE 35.0.0
0014.0324    DPC 144-201-001     DPC subsystem is allowed
             LSN=nc00027
             Prohibited SS  1, 5, 18
             Allowed SS     3, 6
             Blocked SS     100, 103
             Unblocked SS   2, 102, 221
```

Legend

Allowed SS	Allowed subsystem
Blocked SS	Blocked subsystem
LSN	Linkset name. The name must be unique.
Prohibited SS	Prohibited subsystem
Unblocked SS	Unblocked subsystem

Alarm Level

No alarm condition. The message is informational only.

Procedure

1. This message indicates a previous fault has been corrected. No further action is necessary.

0325 - DPC subsystem is blocked

Description

The DPC subsystem is blocked due to administrative action.

Example

```
     RLGHNCXA21W 00-02-07 12:01:43 EST  EAGLE 35.0.0
*C   0014.0325 *C DPC 144-201-001     DPC subsystem is blocked
                 LSN=nc00027
                 Prohibited SS  1, 5, 18
                 Allowed SS     3, 6
                 Blocked SS     100, 103
                 Unblocked SS   2, 102, 221
```

Legend

Allowed SS	Allowed subsystem
Blocked SS	Blocked subsystem
LSN	Linkset name. The name must be unique.
Prohibited SS	Prohibited subsystem
Unblocked SS	Unblocked subsystem

Alarm Level

Critical

Procedure

1. Contact the far-end to correct the problem.

0326 - DPC subsystem is prohibited

Description

The indicated DPC Subsystem is prohibited.

Example

```
     RLGHNCXA21W 00-02-07 12:01:43 EST  EAGLE 35.0.0
*C   0014.0326 *C DPC 144-201-001     DPC subsystem is prohibited
                 LSN=nc00027
                 Prohibited SS  1, 5, 18
                 Allowed SS     3, 6
                 Blocked SS     100, 103
                 Unblocked SS   2, 102, 221
```

Legend

Allowed SS	Allowed subsystem
Blocked SS	Blocked subsystem
LSN	Linkset name. The name must be unique.
Prohibited SS	Prohibited subsystem
Unblocked SS	Unblocked subsystem

Alarm Level

Critical

Procedure

1. Contact the far-end to correct the problem.

0327 - DPC subsystem has been deleted

Description

This indicates a DPC subsystem has been deleted from the system global title translation (GTT) tables.

Example

```
RLGHNCXA21W 00-02-07 12:01:43 EST  EAGLE 35.0.0
0014.0327    DPC 144-201-001     DPC subsystem has been deleted
             LSN=nc00027
             Prohibited SS  1, 5, 18
             Allowed SS     3, 6
             Blocked SS     100, 103
             Unblocked SS   2, 102, 221
```

Legend

Allowed SS	Allowed subsystem
Blocked SS	Blocked subsystem
LSN	Linkset name. The name must be unique.
Prohibited SS	Prohibited subsystem
Unblocked SS	Unblocked subsystem

Alarm Level

No alarm condition. The message is informational only.

Procedure

1. This message indicates a previous fault has been corrected by deletion of the entity. No further action is necessary.

0328 - SCCP is available

Description

The SCCP subsystem has returned to service.

Example

```
RLGHNCXA21W 00-02-07 11:02:30 EST  EAGLE 35.0.0
0100.0328    SCCP SYSTEM           SCCP is available
```

Alarm Level

No alarm condition. The message is informational only.

Procedure

1. This message indicates a previous fault has been corrected. No further action is necessary.

0329 - SCCP capacity normal, card(s) abnormal

Description

The SCCP subsystem is operating normally, using the TVG (Group Ticket Voucher load balancing algorithm) message transport method. The TPS (Transactions Per Second) rate is below its capacity threshold, as defined by the *chg-th-alm* command.

Example

```
RLGHNCXA21W 00-02-07 11:02:30 EST  EAGLE 35.0.0
0100.0329    SCCP SYSTEM         SCCP capacity normal, card(s) abnormal
```

Alarm Level

No alarm condition. The message is informational only.

Procedure

1. This alarm is used in conjunction with alarm #0330 “System SCCP TPS Threshold Exceeded.” For every five minutes the EAGLE 5 ISS is above the threshold, the ATH (Application Trouble Handler) reports the minimum, maximum and average TPS value seen during the past five minute period. When the TPS level drops below the threshold level for 30 seconds, the alarm stops, and alarm #0329 confirms that normal operation has resumed. (Alternatively, the user can clear this alarm by raising the threshold limit to a value greater than the maximum value, in which case, the alarm stops immediately.

2. To obtain details, use the *rept-stat-sccp* command, which displays the status of the SCCP and VSCCP cards and other services and determines the capacity threshold of the SCCP TPS rate. This command also identifies which DSM cards are OOS-MT. For example, enter:

rept-stat-sccp

Following is an example of the output:

```
eaglestp 00-10-24 20:38:58 EST EAGLE 35.0.0
    SCCP SUBSYSTEM REPORT IS-NR          Active      -----
    SCCP Cards Configured= 1  Cards IS-NR= 1   Capacity Threshold = 80%

    CARD   VERSION     PST        SST         AST      MSU USAGE   CPU USAGE
    ------------------------------------------------------------------------
    1212   021-001-000 IS-NR      ACTIVE      ALMINH       47%         32%
    ------------------------------------------------------------------------
    SCCP Service Average MSU Capacity = 47%      Average CPU Capacity = 32%

    Command Completed.
```

0330 - System SCCP TPS Threshold exceeded

Description

This message indicates the EAGLE 5 ISS has exceeded its TPS (Transactions Per Second) message transport rate threshold. For every 30 seconds the EAGLE 5 ISS is above the threshold, an ATH (Application Trouble Handler) reports the minimum, maximum and average TPS value seen during the past 30-second period.

Example

```
      RLGHNCXA21W 00-02-07 11:02:30 EST  EAGLE 35.0.0
**    0100.0330 ** SCCP SYSTEM      System SCCP TPS Threshold exceeded
```

Alarm Level

Major

Procedure

1. Use *rept-stat-sccp* to determine the status of the SCCP subsystem. This command also identifies which SCCP cards are OOS-MT. For example, enter:

rept-stat-sccp

Following is an example of the output:

```
eaglestp 00-10-24 20:38:58 EST EAGLE 35.0.0
    SCCP SUBSYSTEM REPORT IS-NR          Ovflw-1       -----
    SCCP Cards Configured= 4 Cards       IS-NR= 4
    System TCP Alarm Threshold =  80% Total capacity
    System Peak SCCP Load =  3000 TPS
    System Total SCCP Capacity =  5000 TPS


    CARD   VERSION     PST        SST         AST      MSU USAGE   CPU USAGE
    ------------------------------------------------------------------------
    1212   021-001-000 IS-NR      ACTIVE      ALMINH       47%         32%
    ------------------------------------------------------------------------
    SCCP Service Average MSU Capacity = 47%     Average CPU Capacity = 32%

    Command Completed.
```

Use the command *rept-stat-sccp:mode=perf* to retrieve the maximum and average values, if desired.

2. The user may clear this alarm by raising the threshold limit to a value greater than the maximum value. In this case, the alarm stops immediately.

   You should use the *rtrv-th-alm* command to list the threshold rate, and you may use the *chg-th-alm* command to change the threshold value.

3. The user should evaluate this new traffic level and determine whether additional SCCP cards are required to maintain the TPS level the system is processing.

4. Use the *rept-stat-card* command to display the card status and maintenance activity states. Examine the report for any cards that may be OOS-MT.

5. Use the *init-card* command to initialize any cards(s) that are OOS-MT. This causes the card(s) to reload the MTP data as well as GTT data tables.

6. Again using the *rept-stat-sccp* command, verify the card(s) have returned to service. If any card(s) have failed to return to IS-NR, reseat the card(s).

7. If any card(s) remain OOS-MT, replace the card(s).

   NOTE: See Appendix A for details about replacing cards.

0331 - SCCP is not available

Description

The SCCP subsystem is not available to any LIM(s). All TSM/DSM-SCCP cards have failed.

Example

```
          RLGHNCXA21W 00-02-07 11:02:30 EST  EAGLE 35.0.0
     *C   0100.0331 *C SCCP SYSTEM         SCCP is not available
```

Alarm Level

Critical

Procedure

1. Use *rept-stat-sccp* command to determine the status of the SCCP subsystem. This command also identifies which TSM/DSM cards are OOS-MT. For example, enter:

rept-stat-sccp

Following is an example of the output:

```
RLGHNCXA03W 00-02-07 16:10:50 EST  EAGLE 35.0.0
SCCP SUBSYSTEM REPORT IS-NR          Active     -----
SCCP Cards Configured= 1  Cards IS-NR= 1  Capacity Threshold = 100%
CARD   VERSION      PST        SST        AST       MSU USAGE  CPU USAGE
    ------------------------------------------------------------------------
1212   021-001-000  IS-NR      Active     ALMINH       47%      32%
    ------------------------------------------------------------------------
SCCP Service Average MSU Capacity = 47%    Average CPU Capacity = 32%
    Command Completed
```

2. Reinitialize any card(s) not in an IS-NR state using the *init-card* command.

3. After the card(s) have been reloaded, use the *rept-stat-sccp* command to verify the SCCP subsystem has returned to full capacity.

4. If any card(s) fail to return to IS-NR, reseat the card(s).

5. If the card(s) still do not return to IS-NR, replace the card(s).

NOTE: See Appendix A for procedures on replacing cards.

0332 - DPC Subsystem is prohibited and blocked

Description

A subsystem is both prohibited and blocked as reported by the network.

Example

```
    RLGHNCXA21W 00-02-07 12:01:43 EST  EAGLE 35.0.0
*C  0014.0332 *C DPC 144-201-001   DPC Subsystem is prohibited and blocked
                 LSN=nc00027
                 Prohibited SS  1, 5, 18
                 Allowed SS     3, 6
                 Blocked SS     100, 103
                 Unblocked SS   2, 102, 221
```

Legend

Allowed SS	Allowed subsystem
Blocked SS	Blocked subsystem
LSN	Linkset name. The name must be unique.
Prohibited SS	Prohibited subsystem
Unblocked SS	Unblocked subsystem

Alarm Level

Critical

Procedure

1. Contact the far-end to test and correct the problem.

0333 - DPC Subsystem is Normal

Description

The DPC subsystem indicated in the output message is now allowed.

Example

```
RLGHNCXA21W 00-02-07 12:01:43 EST  EAGLE 35.0.0
0014.0333    DPC 144-201-001     DPC Subsystem is Normal
             LSN=nc00027
             Prohibited SS  1, 5, 18
             Allowed SS     3, 6
             Blocked SS     100, 103
             Unblocked SS   2, 102, 221
```

Legend

Allowed SS	Allowed subsystem
Blocked SS	Blocked subsystem
LSN	Linkset name. The name must be unique.
Prohibited SS	Prohibited subsystem
Unblocked SS	Unblocked subsystem

Alarm Level

No alarm condition. The message is informational only.

Procedure

1. This message indicates a previous fault has been corrected. No further action is necessary.

0334 - DPC Subsystem is Abnormal

Description

The indicated DPC subsystem is not reachable through the normal route.

Example

```
     RLGHNCXA21W 00-02-07 12:01:43 EST  EAGLE 35.0.0
*C   0014.0334 *C DPC 144-201-001     DPC Subsystem is Abnormal
                 LSN=nc00027
                 Prohibited SS  1, 5, 18
                 Allowed SS     3, 6
                 Blocked SS     100, 103
                 Unblocked SS   2, 102, 221
```

Legend

Allowed SS	Allowed subsystem
Blocked SS	Blocked subsystem
LSN	Linkset name. The name must be unique.
Prohibited SS	Prohibited subsystem
Unblocked SS	Unblocked subsystem

Alarm Level

Critical

Procedure

1. Enter the *rept-stat-rte* command using the DPC specified from the output message to determine which linkset has a problem.

2. Enter the *rept-stat-l*s using the linkset name specified from the output of step 1 to determine which link(s) could have a problem.

3. Use local procedures to test the link facilities.

0335 - SCCP is removed

Description

All SCCP cards have been deleted from the database; SCCP services are not available to the system. This message is the result of a deliberate action. Removing all TSM-SCCP cards from the database may have been an action from another maintenance procedure. If you wish to restore SCCP services to the system, perform the following procedure. For more information about adding a card to the system, refer to the *Database Administration Manual - SS7*.

Example

```
RLGHNCXA21W 00-02-07 11:02:30 EST  EAGLE 35.0.0
0100.0335    SCCP SYSTEM         SCCP is removed
```

Alarm Level

No alarm condition. The message is informational only.

Procedure

1. Use the *ent-card* command to reenter the TSM-SCCP cards into the system database.

2. Use the *rst-card* command to return the card(s) to service. This causes the MASP to begin downloading global title translation (GTT) tables to the TSM-SCCP.

3. Use the *rept-stat-sccp* command to verify that the card(s) have been restored, after the MASP has completed loading.

0336 - LIM(s) have been denied SCCP service

Description

Some LIM(s) are using the SCCP subsystem, but others have been denied service. This is due to underprovisioning, and will require more cards to be added.

Example

```
     RLGHNCXA21W 00-02-07 11:02:30 EST  EAGLE 35.0.0
**   0100.0336 ** SCCP SYSTEM       LIM(s) have been denied SCCP service
```

Alarm Level

Major

Procedure

1. Use *rept-stat-sccp* command to determine which LIMs have been denied SCCP service.

   For example, enter:

   rept-stat-sccp

   Following is an example of the output:

```
RLGHNCXA03W 00-02-07 16:10:50 EST  EAGLE 35.0.0
SCCP SUBSYSTEM REPORT IS-NR          Active     -----
SCCP Cards Configured= 1  Cards IS-NR= 1  Capacity Threshold = 100%
CARD   VERSION      PST        SST        AST       MSU USAGE  CPU USAGE
    ------------------------------------------------------------------------
1212   021-001-000  IS-NR      Active     ALMINH       47%       32%
    ------------------------------------------------------------------------
SCCP Service Average MSU Capacity = 47%    Average CPU Capacity = 32%
    Command Completed
```

2. Add TSM/DSM-SCCP cards one at a time. Monitor the performance of the SCCP subsystem with the *rept-stat-sccp* command to determine whether additional cards are needed.

0337 - DPC - SS status changed

Description

This output is related to other DPC alarm messages. It indicates that one or more subsystems with an existing alarm condition has had a change in status. The message indicates the new status of the subsystem. A previous alarm condition has not cleared.

Example

```
RLGHNCXA21W 00-02-07 11:02:30 EST  EAGLE 35.0.0
0100.0337    DPC 001-001-001       DPC-SS status changed
             LSN=A1234567
             Prohibited SS 5, 20
```

Alarm Level

No alarm condition. The message is informational only.

Procedure

1. Follow the troubleshooting procedure for the previous alarm.

0338 - X-LIST space full-entry(s) discarded

Description

This message indicates that the total number of dynamic status exception list (x-list) entries for cluster routing has exceeded the maximum number configured. No more entries can be added to the list. This can occur because the maximum number of x-list entries is set too low, the timer that eliminates x-list entries after a specified period is set too long, or the x-list needs to be culled.

Example

```
     RLGHNCXA21W 00-02-07 11:02:30 EST  EAGLE 35.0.0
 **  0100.0338  **  XLIST          X-LIST space full-entry(s) discarded
```

Alarm Level

Major

Procedure

1. To display the system-wide parameters for cluster routing, enter the *rtrv-stpopts* command. Following is an example of the output:

```
RLGHNCXA03W  00-07-23  16:02:34 EST  EAGLE. 35.0.0   STP OPTIONS
-------------------------
MTPT31CTL               1
MTPLT1                yes
MTPLTCTDPCQ             3
MTPLTST             10000
MTPXLQ                500
MTPXLET              0100
MTPXLOT               90%
MTPDPCQ              2000
TFATFRPR             1000
MTPRSI                yes
MTPRSIT              5000
```

The *mtpxlq* parameter is the total number of dynamic status exception list (x-list) entries the EAGLE 5 ISS maintains. There are 2500 total table entries. The default values allow for 2000 entries for provisioned destinations and 500 for x-list entries. (If you increase the number of x-list entries, you must decrease the number of DPCs that can be provisioned by changing the *mtpdpcq* parameter.)

The *mtpxlet* parameter is the maximum amount of time the EAGLE 5 ISS maintains an unreferenced x-list entry.

2. Use the *chg-stpopts* to change the number of x-list entries or the x-list expiration timer.

3. If the problem persists, use the *dact-rstst* command to eliminate specific x-list entries.

0339 - X-LIST space full condition abated

Description

This message indicates the total number of dynamic status exception list (x-list) entries no longer exceeds the maximum allowed.

Example

```
RLGHNCXA21W 00-02-07 11:02:30 EST  EAGLE 35.0.0
0100.0339      XLIST             X-LIST space full condition abated
```

Alarm Level

No alarm condition. The message is informational only.

Procedure

1. This message indicates a previous fault has been corrected. No further action is necessary.

0340 - RCVRY-MTPLP-RST: Circ rte status cleared

Description

The system automatically tests for circular routing when congestion occurs on an ANSI signaling link. This message indicates that the circular routing has been cleared.

Example of Normal Route Alarm

```
RLGHNCXA21W 00-02-07 12:01:43 EST  EAGLE 35.0.0
0195.0340    DPC 144-201-001     RCVRY-MTPLP-RST: Circ rte status cleared
             LSN=nc00027
```

Example of Exception Route Alarm

```
RLGHNCXA21W 06-05-11 17:41:11 EST  EAGLE 35.0.0
0069.0340    RTX 001-101-001     RCVRY-MTPLP-RST: Circ rte status cleared
             SI=3
             LSN=nc00022
```

Legend

LSN	Linkset name. The name must be unique.
SI	Service Indicator class of exception route

Alarm Level

No alarm condition. The message is informational only.

Procedure

1. No action is necessary.

0341 - OAP Unavailable

Description

This message indicates that the EAGLE 5 ISS system is unable to communicate with the OAP or the OAP has an internal failure.

Example

```
           RLGHNCXA21W 00-02-07 11:02:30 EST  EAGLE 35.0.0
    **     0100.0341  **  OAP B       OAP Unavailable
```

Alarm Level

Major

Procedure

1. Enter the following command to determine the status of the OAP(s):

rept-stat-seas

Following is an example of the output:

```
RLGHNCXA03W 00-04-17 14:59:11 EST  EAGLE 35.0.0
                         GPL        PST         SST           AST
------------------------------------------------------------------------
SEAS SYSTEM                         IS-ANR      Restricted    -----
TDM TRM           6                 IS-NR       Active        -----
TDM TRM           9                 IS-NR       Active        -----
OAP              A    220-001-000   IS-NR       Active        -----
OAP              B    -----------   OOS-MT      Isolated      -----
X25 Link         A1                 IS-NR       Active        -----
X25 Link         B1                 OS-MT       Fault         -----

SEAS SYSTEM  ALARM STATUS = ** 0362  LSMS is at min service limit
OAP A        ALARM STATUS = No Alarms.
OAP B        ALARM STATUS = ** 0341 OAP unavailable
X25          ALARM STATUS = No Alarms.
X25          ALARM STATUS = ** 0358 LSMS Q.3 association unavailable

X25 A1 PVCs IS-NR   = 1,2,3
X25 A1 PVCs OOS-MT  = ---

X25 B1 PVCs IS-NR   = ---
X25 B1 PVCs OOS-MT  = 1,2,3
Command Completed.
```

Refer to the *Commands Manual* to interpret the output.

NOTE: If the OAP has an internal failure, yet it can still communicate with the system, the state for the OAP appears in the output as OOS-MT/Fault instead of OOS-MT/Isolated. For instance, if the OAP has a hard disk failure the state would appear as OOS-MT/Fault. If the hard disk is full, it will not communicate.

2. If the OAP has a hard disk failure or the hard disk is full, contact Tekelec Technical Services at the appropriate number.

Reference: "Customer Care Center" on page 1-13.

---

3. If the OAP(s) are out-of-service, check the physical connections. See the *Installation Manual* for more information about these system components.

---

4. Check for any fuse alarms on the Fuse and Alarm Panel in the OAP frame. There are two 7.5 amp fuses for each OAP. The fuses for OAP1 are marked "Fuse 1A" and "Fuse 1B". The fuses for OAP2 are marked "Fuse 2A" and "Fuse 2B". If there is a fuse alarm, replace the fuses for the OAP that is unavailable. Also, make sure the two 10 amp breakers are not tripped.

---

5. Enter the following command to verify that the SEAS ports are functioning:

rept-stat-trm

Following is an example of the output:

```
RLGHNCXA03W 00-02-07 09:50:17 EST  EAGLE 35.0.0
TRM  PST            SST           AST
1     IS-NR          Active        -----
2     IS-NR          Active        -----
3     IS-NR          Active        -----
4     OOS-MT-DSBLD   MANUAL        -----
5     IS-NR          Active        -----
6     IS-NR          Active        -----
7     IS-NR          Active        -----
8     IS-NR          Active        -----
9     IS-NR          Active        -----
10    IS-NR          Active        -----
11    IS-NR          Active        -----
12    IS-NR          Active        -----
13    OOS-MT-DSBLD   MANUAL        -----
14    OOS-MT-DSBLD   MANUAL        -----
15    OOS-MT-DSBLD   MANUAL        -----
16    OOS-MT-DSBLD   MANUAL        -----
Command Completed.
```

Use the output from Step 1 (TRM) to identify the OAP ports. Refer to the *Commands Manual* to interpret the output.

---

6. If a SEAS port is OOS-MT-DSBLD, enable the port with the following command:

*rst-trm:trm=**x***

where ***x*** is the OAP port number.

If this action corrects the problem, you are done with this procedure.

---

7. If the problem persists, verify that the OAP cables are connected to the correct SEAS TDM port(s).

---

8. If the problem persists, verify that the OAP cables are connected to the correct OAP serial ports.

---

9. Verify the RS-232 parameters are configured properly for the SEAS port by entering the *rtrv-trm* command for the specified port. The port should be configured to 19200 baud, even parity, one stop bit, and hardware flow control.

---

10. If the problem still persists, reset the OAP by entering the *init-oap* command. The OAP comes back in-service within five minutes and the system clears the alarm.

---

11. If the problem is still not corrected, reseat the TDM card. If the OAP still does not respond, replace the TDM card.

NOTE: See Appendix A, *Card Removal/Replacement Procedures* **for card replacement procedures.**

---

12. If the OAP is still not available, contact Tekelec Technical Services at the appropriate number.

Reference: “Customer Care Center” on page 1-13.

0342 - SEAS UAL unavailable

Description

This message indicates the SEAS User Application Layer (UAL) process on the OAP is not running. Layer 4 (UPL) is not available for the specified OAP.

Example

```
           RLGHNCXA21W 00-02-07 11:02:30 EST  EAGLE 35.0.0
    **     0100.0342  **  SEAS OAP B       SEAS UAL unavailable
```

Alarm Level

Major

Procedure

1. The UAL should recover automatically by restarting.

2. Enter the following command to verify the status of the OAP(s):

rept-stat-seas

Following is an example of the output:

```
RLGHNCXA03W 00-04-17 14:59:11 EST  EAGLE 35.0.0
                         GPL        PST         SST           AST
------------------------------------------------------------------------
SEAS SYSTEM                         IS-ANR      Restricted    -----
TDM TRM           6                 IS-NR       Active        -----
TDM TRM           9                 IS-NR       Active        -----
OAP              A    220-001-000   IS-NR       Active        -----
OAP              B    -----------   OOS-MT      Isolated      -----
X25 Link         A1                 IS-NR       Active        -----
X25 Link         B1                 OS-MT       Fault         -----

SEAS SYSTEM  ALARM STATUS = ** 0362  LSMS is at min service limit
OAP A        ALARM STATUS = No Alarms.
OAP B        ALARM STATUS = ** 0342 SEAS UAL unavailable
X25          ALARM STATUS = No Alarms.
X25          ALARM STATUS = ** 0358 LSMS Q.3 association unavailable

X25 A1 PVCs IS-NR   = 1,2,3
X25 A1 PVCs OOS-MT  = ---

X25 B1 PVCs IS-NR   = ---
X25 B1 PVCs OOS-MT  = 1,2,3
Command Completed.
```

Refer to the *Commands Manual* to interpret the output.

3. If the UAL does not recover, contact the SEAC to test from their equipment to the local synchronous modem. Make sure the X.25 link is activated at their end and the link tests within specifications. If possible, have the SEAC or PDN swap X.25 cards at their end with a known good card.

4. If the problem persists, contact Tekelec Technical Services at the appropriate number.

   Reference: “Customer Care Center” on page 1-13.

0343 - SEAS X.25 Link unavailable

Description

This message indicates the X.25 link to the specified OAP is down. Layer 2 is not available for the indicated SEAS X.25 link.

Example

```
     RLGHNCXA21W 00-02-07 11:02:30 EST  EAGLE 35.0.0
 **   0100.0343  **  SEAS X25 Link A1     SEAS X.25 Link unavailable
```

Alarm Level

Major

Procedure

1. Enter the following command to determine the status of the SEAS subsystem:

rept-stat-seas

Following is an example of the output:

```
RLGHNCXA03W 00-04-17 14:59:11 EST  EAGLE 35.0.0
                         GPL        PST         SST           AST
------------------------------------------------------------------------
SEAS SYSTEM                         IS-ANR      Restricted    -----
TDM TRM           6                 IS-NR       Active        -----
TDM TRM           9                 IS-NR       Active        -----
OAP              A    220-001-000   IS-NR       Active        -----
OAP              B    -----------   OOS-MT      Isolated      -----
X25 Link         A1                IS-NR       Active        -----
X25 Link         B1                OS-MT       Fault         -----

SEAS SYSTEM  ALARM STATUS = ** 0362  LSMS is at min service limit
OAP A        ALARM STATUS = No Alarms.
OAP B        ALARM STATUS = ** 0341 OAP unavailable
X25          ALARM STATUS = No Alarms.
X25          ALARM STATUS = ** 0343 SEAS X.25 Link unavailable

X25 A1 PVCs IS-NR   = 1,2,3
X25 A1 PVCs OOS-MT  = ---

X25 B1 PVCs IS-NR   = ---
X25 B1 PVCs OOS-MT  = 1,2,3
Command Completed.
```

Refer to the *Commands Manual* to interpret the output.

2. Check the connections from the synchronous modem (in the OAP frame) to the OAP. See the *Installation Manual* for more information about these system components. If the connections are firmly seated, test and if necessary, replace the modem.

3. Determine the status of the X.25 link by entering the following command:

   rept-stat-seas

   where x is the appropriate TRM number from Step 1.

   Following is an example of the output:

```
RLGHNCXA03W 00-01-04 15:59:06 EST EAGLE 35.0.0
SEAS COMPONENT             PST           SST         AST
------------------------------------------------------------
SEAS Interface             IS_ANR        Restricted  ------
TRM            = 2         IS-NR         Active      ------
OAP            = A         IS-NR         Active      ------
X25 port       = A1        IS-NR         Active      ALMINH

PVCs IS-NR     = 1, 3
PVCs OOS-MT    = 2
OAP  GPL       = 022-003-000
ALARM STATUS   = *   0344  PVC unavailable.
Command Completed.
```

   Refer to the *Commands Manual* to interpret the output.

4. If the problem persists, contact the SEAC to test from their equipment to the local synchronous modem. Make sure the X.25 link is activated at their end and the link tests within specifications. If possible, have the SEAC or PDN swap X.25 cards at their end with a known good card.

5. If the problem still persists, reset the OAP by entering the *init-oap* command. The OAP comes back in-service within three minutes and the system clears the alarm.

6. Determine the status of the X.25 link by entering the following command:

   rept-stat-seas

   where x is the appropriate TRM number from Step 1.

7. If the X.25 link is still unavailable, contact Tekelec Technical Services at the appropriate number.

   Reference: “Customer Care Center” on page 1-13.

0344 - SEAS PVC unavailable

Description

This message indicates that the permanent virtual circuit (PVC) connected to the OAP is not available.

Example

```
       RLGHNCXA21W 00-02-07 11:02:30 EST  EAGLE 35.0.0
 *     0100.0344  *  SEAS X25 Link A1          SEAS PVC unavailable
```

Alarm Level

Minor

Procedure

1. Enter the following command to determine the status of the SEAS subsystem:

rept-stat-seas

Following is an example of the output:

```
RLGHNCXA03W 00-04-17 14:59:11 EST  EAGLE 35.0.0
                         GPL        PST         SST           AST
------------------------------------------------------------------------
SEAS SYSTEM                         IS-ANR      Restricted    -----
TDM TRM           6                 IS-NR       Active        -----
TDM TRM           9                 IS-NR       Active        -----
OAP              A    220-001-000   IS-NR       Active        -----
OAP              B    -----------   OOS-MT      Isolated      -----
X25 Link         A1                IS-NR       Active        -----
X25 Link         B1                OS-MT       Fault         -----

SEAS SYSTEM  ALARM STATUS = ** 0362  LSMS is at min service limit
OAP A        ALARM STATUS = No Alarms.
OAP B        ALARM STATUS = ** 0341 OAP unavailable
X25          ALARM STATUS = No Alarms.
X25          ALARM STATUS = * 0344 SEAS PVC unavailable

X25 A1 PVCs IS-NR   = 1,2,3
X25 A1 PVCs OOS-MT  = ---

X25 B1 PVCs IS-NR   = ---
X25 B1 PVCs OOS-MT  = 1,2,3
Command Completed.
```

Refer to the *Commands Manual* to interpret the output.

2. Determine the status of the OAP and PVC by entering the following command:

rept-stat-seas

Following is an example of the output:

```
RLGHNCXA03W 00-01-04 15:59:06 EST EAGLE 35.0.0
SEAS COMPONENT             PST           SST         AST
------------------------------------------------------------
SEAS Interface             IS_ANR        Restricted  ------
TRM            = 2         IS-NR         Active      ------
OAP            = A         IS-NR         Active      ------
X25 port       = A1        IS-NR         Active      ALMINH

PVCs IS-NR     = 1, 3
PVCs OOS-MT    = 2
OAP  GPL       = 022-003-000
ALARM STATUS   = *   0344  PVC unavailable.
Command Completed.
```

Refer to the *Commands Manual* to interpret the output.

---

3. If there are any PVCs, the X.25 link physical layer is good.

---

4. If the problem persists, contact the SEAC to test from their equipment to the local synchronous modem.

---

5. If the PVC is still not available, contact Tekelec Technical Services at the appropriate number.

Reference: “Customer Care Center” on page 1-13.

0345 - All SEAS UAL sessions unavailable

Description

This message indicates the X.25 User Application Layer (UAL) is not available. If all PVCs for the indicated X.25 link have failed, UAL is no longer available, or all UAL sessions are unavailable.

Example

```
    RLGHNCXA21W 00-02-07 11:02:30 EST  EAGLE 35.0.0
**  0100.0345  **  SEAS X25 Link B1       All SEAS UAL sessions unavailable
```

Alarm Level

Major

Procedure

1. Enter the following command to determine the status of the OAP(s):

rept-stat-seas

Following is an example of the output:

```
RLGHNCXA03W 00-04-17 14:59:11 EST  EAGLE 35.0.0
                          GPL        PST         SST           AST
------------------------------------------------------------------------
SEAS SYSTEM                          IS-ANR      Restricted    -----
TDM TRM           6                  IS-NR       Active        -----
TDM TRM           9                  IS-NR       Active        -----
OAP              A    220-001-000    IS-NR       Active        -----
OAP              B    -----------    OOS-MT      Isolated      -----
X25 Link         A1                  IS-NR       Active        -----
X25 Link         B1                  OS-MT       Fault         -----

SEAS SYSTEM  ALARM STATUS = ** 0362  LSMS is at min service limit
OAP A        ALARM STATUS = No Alarms.
OAP B        ALARM STATUS = ** 0341 OAP unavailable
X25          ALARM STATUS = No Alarms.
X25          ALARM STATUS = ** 0345 All SEAS UAL sessions unavailable

X25 A1 PVCs IS-NR   = 1,2,3
X25 A1 PVCs OOS-MT  = ---

X25 B1 PVCs IS-NR   = ---
X25 B1 PVCs OOS-MT  = 1,2,3
Command Completed.
```

2. Contact the SEAC to verify the X.25 PVCs are correctly configured and activated. The SEAC should also deactivate and activate the X.25 link.

3. If the problem persists, reset the OAP by entering the *init-oap* command. The OAP comes back in-service within three minutes and the system clears the alarm.

4. If the problem persists, contact the SEAC to test from their equipment to the local synchronous modem.

5. If the X.25 UAL is still not available, contact Tekelec Technical Services at the appropriate number.

   Reference: “Customer Care Center” on page 1-13.

0346 - SEAS UAL session unavailable

Description

This message indicates that the SEAS X.25 link UAL session on one PVC is not available.

Example

```
       RLGHNCXA21W 00-02-07 11:02:30 EST  EAGLE 35.0.0
 *     0100.0346  *  SEAS X25 Link B1        SEAS UAL session unavailable
```

Alarm Level

Minor

Procedure

1. Enter the following command to determine the status of the OAP(s):

rept-stat-seas

Following is an example of the output:

```
RLGHNCXA03W 00-04-17 14:59:11 EST  EAGLE 35.0.0
                         GPL        PST         SST           AST
------------------------------------------------------------------------
SEAS SYSTEM                         IS-ANR      Restricted    -----
TDM TRM           6                 IS-NR       Active        -----
TDM TRM           9                 IS-NR       Active        -----
OAP              A    220-001-000   IS-NR       Active        -----
OAP              B    -----------   OOS-MT      Isolated      -----
X25 Link         A1                 IS-NR       Active        -----
X25 Link         B1                 OS-MT       Fault         -----

SEAS SYSTEM  ALARM STATUS = ** 0362  LSMS is at min service limit
OAP A        ALARM STATUS = No Alarms.
OAP B        ALARM STATUS = ** 0341 OAP unavailable
X25          ALARM STATUS = No Alarms.
X25          ALARM STATUS = * 0346 SEAS UAL session unavailable

X25 A1 PVCs IS-NR   = 1,2,3
X25 A1 PVCs OOS-MT  = ---

X25 B1 PVCs IS-NR   = ---
X25 B1 PVCs OOS-MT  = 1,2,3
Command Completed.
```

Refer to the *Commands Manual* to interpret the output.

2. If the problem persists, contact the SEAC to test from their equipment to the local synchronous modem.

3. If the problem still persists, contact Tekelec Technical Services at the appropriate number.

Reference: “Customer Care Center” on page 1-13.

0347 - SEAS X.25 Link is available

Description

This message indicates that a previous problem with the X.25 link has been corrected.

Example

```
RLGHNCXA21W 00-02-07 11:02:30 EST  EAGLE 35.0.0
0100.0347    SEAS X.25 Link B1         SEAS X.25 Link is available
```

Alarm Level

No alarm condition. The message is informational only.

Procedure

1. This message indicates a previous fault has been corrected. No further action is necessary.

0348 - SEAS is at min service limit

Description

This message indicates that some part of the SEAS subsystem has failed. When there are two OAPs, this could mean that one OAP has failed, or some part of the path to the SEAC for that OAP has failed. When there is only one OAP with two X.25 links to the SEAC and two connections to the TDM serial ports, either one of the X.25 links has failed, or one of the serial port connections to the TDM has failed. One more failure in either case will cause the SEAS subsystem to fail.

Example

```
         RLGHNCXA21W 00-02-07 11:02:30 EST  EAGLE 35.0.0
 **      0100.0348  **  SEAS SYSTEM       SEAS is at min service limit
```

Alarm Level

Major

Procedure

1. Determine the status of the OAP(s) by entering the following command:

rept-stat-seas

Following is an example of the output:

```
RLGHNCXA03W 00-04-17 14:59:11 EST  EAGLE 35.0.0
                         GPL        PST         SST           AST
------------------------------------------------------------------------
SEAS SYSTEM                         IS-ANR      Restricted    -----
TDM TRM           6                 IS-NR       Active        -----
TDM TRM           9                 IS-NR       Active        -----
OAP              A    220-001-000   IS-NR       Active        -----
OAP              B    -----------   OOS-MT      Isolated      -----
X25 Link         A1                 IS-NR       Active        -----
X25 Link         B1                 OS-MT       Fault         -----

SEAS SYSTEM  ALARM STATUS = ** 0348  SEAS is at min service limit
OAP A        ALARM STATUS = No Alarms.
OAP B        ALARM STATUS = ** 0341 OAP unavailable
X25          ALARM STATUS = No Alarms.
X25          ALARM STATUS = ** 0358 LSMS Q.3 association unavailable

X25 A1 PVCs IS-NR   = 1,2,3
X25 A1 PVCs OOS-MT  = ---

X25 B1 PVCs IS-NR   = ---
X25 B1 PVCs OOS-MT  = 1,2,3
```

Refer to the *Commands Manual* to interpret the output.

2. If `0341 OAP unavailable` is output, follow the appropriate procedure.

   Reference: 0341 - OAP Unavailable

---

3. If `0343 SEAS X. 25 Link unavailable` is output, follow the appropriate procedure.

   Reference: 0343 - SEAS X.25 Link unavailable

---

4. If `0354 OAP TDM Port unavailable` is output, follow the appropriate procedure.

   Reference: 0354 - One OAP terminal unavailable

---

5. If the OAP(s) are out-of-service check the physical connections. See the *Installation Manual* for more information about these system components. If the connections are firmly seated, test and if necessary, replace the modem.

---

6. Check for any fuse alarms on the Fuse and Alarm Panel in the OAP frame. There are two 7.5 amp fuses for each OAP. The fuses for OAP1 are marked “Fuse 1A” and “Fuse 1B”. The fuses for OAP2 are marked “Fuse 2A” and “Fuse 2B”. If there is a fuse alarm, replace the fuses for the OAP that is unavailable. Also, make sure the two 10 amp breakers are not tripped.

7. Ensure that the other serial port devices are functioning by entering the following command:

   rept-stat-trm

   Following is an example of the output:

```
RLGHNCXA03W 00-02-07 09:50:17 EST  EAGLE 35.0.0
TRM  PST            SST           AST
1     IS-NR          Active        -----
2     IS-NR          Active        -----
3     IS-NR          Active        -----
4     OOS-MT-DSBLD   MANUAL        -----
5     IS-NR          Active        -----
6     IS-NR          Active        -----
7     IS-NR          Active        -----
8     IS-NR          Active        -----
9     IS-NR          Active        -----
10    IS-NR          Active        -----
11    IS-NR          Active        -----
12    IS-NR          Active        -----
13    OOS-MT-DSBLD   MANUAL        -----
14    OOS-MT-DSBLD   MANUAL        -----
15    OOS-MT-DSBLD   MANUAL        -----
16    OOS-MT-DSBLD   MANUAL        -----
Command Completed.
```

   Refer to the *Commands Manual* to interpret the output.

---

8. Enable the terminal port with the following command:

*rst-trm:trm=**x***

where ***x*** is the OAP port number.

If this action corrects the problem, you are done with this procedure.

---

9. Enter the following command to inhibit the unavailable OAP terminal displayed in the output from Step 1:

inh-trm:trm=x

where x is the port number.
NOTE: The force parameter is required for the last OAP terminal inhibited.

---

10. If the problem persists, enter the following command to reset the OAP:

init-oap:oap=x

where x is the OAP to be initialized.

Verify that the OAP comes back in-service within five minutes and the system clears the alarm.

If this clears the alarm, continue with Step 14.

---

11. Enter the following command for the inhibited OAP terminal:

chg-trm:trm=x:type=none

where x is the port number.

---

12. If the problem is still not corrected, reseat the TDM card. If the OAP still does not respond, replace the TDM card.

NOTE: See Appendix A, *Card Removal/Replacement Procedures* **for card replacement procedures.**

---

13. Enter the following command for each OAP terminal inhibited:

chg-trm:trm=x:type=oap

where x is the port number.

---

14. Enter the following command to return the OAP terminals to the in-service state:

alw-trm:trm=x

where x is the port number.

---

15. If the problem persists, contact the SEAC to test from their equipment to the local synchronous modem.

---

16. If the problem is still not corrected, contact Tekelec Technical Services at the appropriate number.

Reference: “Customer Care Center” on page 1-13.

0349 - SEAS unavailable

Description

This message indicates that the EAGLE 5 ISS system is unable to communicate with the SEAS subsystem.

Example

```
             RLGHNCXA21W 00-02-07 11:02:30 EST  EAGLE 35.0.0
       *C    0100.0349  *C  SEAS SYSTEM         SEAS unavailable
```

Alarm Level

Critical

Procedure

1. Enter the following command to determine the status of the OAP(s):

rept-stat-seas

Following is an example of the output:

```
RLGHNCXA03W 00-04-17 14:59:11 EST  EAGLE 35.0.0
                        GPL        PST         SST           AST
------------------------------------------------------------------------
SEAS SYSTEM                        IS-ANR      Restricted    -----
TDM TRM           6                IS-NR       Active        -----
TDM TRM           9                IS-NR       Active        -----
OAP              A    220-001-000   IS-NR       Active        -----
OAP              B    -----------   OOS-MT      Isolated      -----
X25 Link         A1                 IS-NR       Active        -----
X25 Link         B1                 OS-MT       Fault         -----

SEAS SYSTEM  ALARM STATUS = *C 0349  SEAS unavailable
OAP A        ALARM STATUS = No Alarms.
OAP B        ALARM STATUS = ** 0341 OAP unavailable
X25          ALARM STATUS = No Alarms.
X25          ALARM STATUS = ** 0358 LSMS Q.3 association unavailable

X25 A1 PVCs IS-NR   = 1,2,3
X25 A1 PVCs OOS-MT  = ---

X25 B1 PVCs IS-NR   = ---
X25 B1 PVCs OOS-MT  = 1,2,3
Command Completed.
```

Refer to the *Commands Manual* to interpret the output.

2. If the OAP(s) are out-of-service, check the physical connections. See the *Installation Manual* for more information about these system components. If the connections are firmly seated, test and if necessary, replace the modem.

---

3. If `0341 OAP unavailable` is output, follow the appropriate procedure.

Reference: 0341 - OAP Unavailable

---

4. If `0342 SEAS UAL unavailable` is output, follow the appropriate procedure.

Reference: 0342 - SEAS UAL unavailable

---

5. If `0343 SEAS X. 25 Link unavailable` is output, follow the appropriate procedure.

Reference: 0343 - SEAS X.25 Link unavailable

---

6. If `0345 All SEAS UAL sessions unavailable` is output, follow the appropriate procedure.

Reference: 0345 - All SEAS UAL sessions unavailable

---

7. If `0350 OAP terminals inhibited` is output, follow the appropriate procedure.

Reference: 0350 - OAP terminals inhibited

---

8. Check for any fuse alarms on the Fuse and Alarm Panel in the OAP frame. There are two 7.5 amp fuses for each OAP. The fuses for OAP1 are marked “Fuse 1A” and “Fuse 1B”. The fuses for OAP2 are marked “Fuse 2A” and “Fuse 2B”. If there is a fuse alarm, replace the fuses for the OAP that is unavailable. Also, make sure the two 10 amp breakers are not tripped.

---

9. Enter the following command to verify the status of the other serial port devices:

rept-stat-trm

Following is an example of the output:

```
RLGHNCXA03W 00-02-07 09:50:17 EST  EAGLE 35.0.0
TRM  PST            SST          AST
1     IS-NR          Active        -----
2     IS-NR          Active        -----
3     IS-NR          Active        -----
4     OOS-MT-DSBLD   MANUAL        -----
5     IS-NR          Active        -----
6     IS-NR          Active        -----
7     IS-NR          Active        -----
8     IS-NR          Active        -----
9     IS-NR          Active        -----
10    IS-NR          Active        -----
11    IS-NR          Active        -----
12    IS-NR          Active        -----
13    OOS-MT-DSBLD   MANUAL        -----
```

```
14    OOS-MT-DSBLD   MANUAL        -----
15    OOS-MT-DSBLD   MANUAL        -----
16    OOS-MT-DSBLD   MANUAL        -----
Command Completed.
```

Refer to the *Commands Manual* to interpret the output.

---

10. Enable the terminal port with the following command:

*rst-trm:trm=**x***

where ***x*** is the serial port number.

If this action corrects the problem, you are done with this procedure.

---

11. Enter the following command to inhibit the unavailable OAP terminal displayed in the output from Step 1:

inh-trm:trm=x

where x is the port number.
NOTE: The force parameter is required for the last OAP terminal inhibited.

---

12. If the problem persists, enter the following command to reset the OAP:

init-oap:oap=x

where x is the OAP to be initialized.

Verify that the OAP comes back in-service within five minutes and the system clears the alarm.

If this clears the alarm, continue with Step 14.

---

13. Enter the following command for the inhibited OAP terminal:

chg-trm:trm=x:type=none

where x is the port number.

---

14. If the problem is still not corrected, reseat the TDM card. If the OAP still does not respond, replace the TDM card.

NOTE: See Appendix A, *Card Removal/Replacement Procedures* **for card replacement procedures.**

---

15. Enter the following command for each OAP terminal inhibited:

chg-trm:trm=x:type=oap

where x is the port number.

---

16. Enter the following command to return the OAP terminals to the in-service state:

alw-trm:trm=x

where x is the port number.

---

17. If the problem persists, contact the SEAC to test from their equipment to the local X.25 equipment.

---

18. If the OAP is still not available, contact Tekelec Technical Services at the appropriate number.

Reference: “Customer Care Center” on page 1-13.

0350 - OAP terminals inhibited

Description

This message indicates that the OAP terminals are inhibited.

Example

```
    RLGHNCXA21W 00-02-07 11:02:30 EST  EAGLE 35.0.0
*C  0100.0350  *C  SEAS SYSTEM     OAP terminals inhibited
```

Alarm Level

Critical

Procedure

1. Enter the following command to determine which ports are inhibited:

rept-stat-seas

Following is an example of the output:

```
RLGHNCXA03W 00-04-17 14:59:11 EST  EAGLE 35.0.0
                         GPL        PST         SST           AST
------------------------------------------------------------------------
SEAS SYSTEM                         IS-ANR      Restricted    -----
TDM TRM           6                 IS-NR       Active        -----
TDM TRM           9                 IS-NR       Active        -----
OAP              A    220-001-000   IS-NR       Active        -----
OAP              B    -----------   OOS-MT      Isolated      -----
X25 Link         A1                 IS-NR       Active        -----
X25 Link         B1                 OS-MT       Fault         -----

SEAS SYSTEM  ALARM STATUS = *C 0350  OAP terminals inhibited
OAP A        ALARM STATUS = No Alarms.
OAP B        ALARM STATUS = ** 0341 OAP unavailable
X25          ALARM STATUS = No Alarms.
X25          ALARM STATUS = ** 0358 LSMS Q.3 association unavailable

X25 A1 PVCs IS-NR   = 1,2,3
X25 A1 PVCs OOS-MT  = ---

X25 B1 PVCs IS-NR   = ---
X25 B1 PVCs OOS-MT  = 1,2,3
Command Completed.
```

Refer to the *Commands Manual* to interpret the output.

2. Enter the following command to verify that the other serial port devices are functioning:

rept-stat-trm

Following is an example of the output:

```
RLGHNCXA03W 00-02-07 09:50:17 EST  EAGLE 35.0.0
TRM  PST           SST           AST
1     IS-NR         Active        -----
2     IS-NR         Active        -----
3     IS-NR         Active        ALMINH
4     IS-NR         Active        -----
5     OOS-MT-DSBLD  Manual        -----
6     IS-NR         Active        -----
7     IS-NR         Active        -----
8     IS-NR         Active        -----
9     IS-NR         Active        -----
10    IS-NR         Active        -----
11    IS-NR         Active        ALMINH
12    IS-NR         Active        -----
13    IS-NR         Active        -----
14    IS-NR         Active        -----
15    IS-NR         Active        -----
16    IS-NR         Active        -----
Command Completed
```

Refer to the *Commands Manual* to interpret the output.

---

3. If only the SEAS port(s) are not functioning, enable the SEAS port(s) with the following command:

*rst-trm:trm=**x***

where ***x*** is the OAP port number.

If this action corrects the problem, you are done with this procedure.

---

4. Enter the following command to inhibit the unavailable OAP terminal displayed in the output from Step 1:

inh-trm:trm=x

where x is the port number.
NOTE: The force parameter is required for the last OAP terminal inhibited.

---

5. Enter the following command for the inhibited OAP terminal:

chg-trm:trm=x:type=none

where x is the port number.

---

6. If the problem is still not corrected, reseat the TDM card. If the problem persists, replace the TDM card.

NOTE: See Appendix A, *Card Removal/Replacement Procedures* **for card replacement procedures.**

---

7. Enter the following command for each OAP terminal inhibited:

   chg-trm:trm=x:type=oap

   where x is the port number.

8. Enter the following command to return the OAP terminals to the in-service state:

   alw-trm:trm=x

   where x is the port number.

0351 - SEAS is available

Description

This message indicates that a problem with SEAS system has been corrected.

Example

```
RLGHNCXA21W 00-02-07 11:02:30 EST  EAGLE 35.0.0
0100.0351    SEAS SYSTEM           SEAS is available
```

Alarm Level

No alarm condition. The message is informational only.

Procedure

1. This message indicates a previous fault has been corrected. No further action is necessary.

0352 - SEAS is removed

Description

This message indicates that the SEAS feature has been manually removed by removing both SEAS TDM ports.

Example

```
RLGHNCXA21W 00-02-07 11:02:30 EST  EAGLE 35.0.0
0100.0352    SEAS SYSTEM           SEAS is removed
```

Alarm Level

No alarm condition. The message is informational only.

Procedure

1. No further action is necessary.

0353 - OAP is available

Description

This indicates a previous problem with the OAP has been corrected.

Example

```
RLGHNCXA21W 00-02-07 11:02:30 EST  EAGLE 35.0.0
0100.0353    OAP A            OAP is available
```

Alarm Level

No alarm condition. The message is informational only.

Procedure

1. This message indicates a previous fault has been corrected. No further action is necessary.

0354 - One OAP terminal unavailable

Description

This message indicates that the OAP terminal specified in the output message is not available.

Example

```
       RLGHNCXA21W 00-02-07 11:02:30 EST  EAGLE 35.0.0
**     0100.0354  **  OAP B         One OAP terminal unavailable
```

Alarm Level

Major

Procedure

1. Enter the following command to determine which port is unavailable:

rept-stat-seas

Following is an example of the output:

```
RLGHNCXA03W 00-04-17 14:59:11 EST  EAGLE 35.0.0
                         GPL        PST         SST           AST
------------------------------------------------------------------------
SEAS SYSTEM                         IS-ANR      Restricted    -----
TDM TRM           6                 IS-NR       Active        -----
TDM TRM           9                 IS-NR       Active        -----
OAP              A    220-001-000   IS-NR       Active        -----
OAP              B    -----------   OOS-MT      Isolated      -----
X25 Link         A1                 IS-NR       Active        -----
X25 Link         B1                 OS-MT       Fault         -----

SEAS SYSTEM  ALARM STATUS = ** 0362  LSMS is at min service limit
OAP A        ALARM STATUS = No Alarms.
OAP B        ALARM STATUS = ** 0354 One OAP terminal unavailable
X25          ALARM STATUS = No Alarms.
X25          ALARM STATUS = ** 0358 LSMS Q.3 association unavailable

X25 A1 PVCs IS-NR   = 1,2,3
X25 A1 PVCs OOS-MT  = ---

X25 B1 PVCs IS-NR   = ---
X25 B1 PVCs OOS-MT  = 1,2,3
Command Completed.
```

Refer to the *Commands Manual* to interpret the output.

2. Enter the following command to verify that the other ports are functioning:

rept-stat-trm

Following is an example of the output:

```
RLGHNCXA03W 00-02-07 09:50:17 EST  EAGLE 35.0.0
TRM  PST            SST           AST
1     IS-NR          Active        -----
2     IS-NR          Active        -----
3     IS-NR          Active        -----
4     OOS-MT-DSBLD   MANUAL        -----
5     IS-NR          Active        -----
6     IS-NR          Active        -----
7     IS-NR          Active        -----
8     IS-NR          Active        -----
9     IS-NR          Active        -----
10    IS-NR          Active        -----
11    IS-NR          Active        -----
12    IS-NR          Active        -----
13    OOS-MT-DSBLD   MANUAL        -----
14    OOS-MT-DSBLD   MANUAL        -----
15    OOS-MT-DSBLD   MANUAL        -----
16    OOS-MT-DSBLD   MANUAL        -----
Command Completed.
```

Refer to the *Commands Manual* to interpret the output.

---

3. Enable the terminal port with the following command:

*rst-trm:trm=**x***

where ***x*** is the serial port number.

If this action corrects the problem, you are done with this procedure.

---

4. Check the physical connections between the OAP and the system. Make sure the connectors are firmly seated.

If this action corrects the problem, you are done with this procedure.

---

5. Enter the following command to inhibit the unavailable OAP terminal displayed in the output from Step 1:

inh-trm:trm=x

where x is the port number.

NOTE: The force parameter is required for the last OAP terminal inhibited.

---

6. If the problem persists, enter the following command to reset the OAP:

   init-oap:oap=x

   where x is the OAP to be initialized.

   Verify that the OAP comes back in-service within five minutes and the system clears the alarm.

   If this clears the alarm, continue with Step 10.

---

7. Enter the following command for the inhibited OAP terminal:

   chg-trm:trm=x:type=none

   where x is the port number.

---

8. If the problem is still not corrected, reseat the TDM card. If the OAP still does not respond, replace the TDM card.

   NOTE: See Appendix A, *Card Removal/Replacement Procedures* **for card replacement procedures.**

---

9. Enter the following command for each OAP terminal inhibited:

   chg-trm:trm=x:type=oap

   where x is the port number.

---

10. Enter the following command to return the OAP terminals to the in-service state:

    alw-trm:trm=x

    where x is the port number.

---

11. If the problem is still not corrected, contact Tekelec Technical Services at the appropriate number.

    Reference: “Customer Care Center” on page 1-13.

0355 - LSMS is available

Description

All communication paths are complete to the LSMS.

Example

```
RLGHNCXA21W 00-02-07 12:01:43 EST  EAGLE 35.0.0
0014.0355     LSMS SYSTEM         LSMS is available
```

Alarm Level

No alarm condition. The message is informational only.

Procedure

1. This message indicates a previous fault is corrected. No further action is necessary.

0356 - LSMS is unavailable

Description

There are no communication paths available to the LSMS. This condition is reached when all OAP terminals are manually inhibited or all LSMS associations are down.

Example

```
   RLGHNCXA21W 00-02-07 12:01:43 EST  EAGLE 35.0.0
*C 0014.0356  *C   LSMS SYSTEM         LSMS is unavailable
```

Alarm Level

Critical

Procedure

1. Enter the following command to verify the status of the terminals:
rept-stat-trm

Following is an example of the output:

```
RLGHNCXA03W 00-02-07 09:50:17 EST  EAGLE 35.0.0
TRM  PST            SST           AST
1     IS-NR          Active        -----
2     IS-NR          Active        -----
3     IS-NR          Active        -----
4     OOS-MT-DSBLD   MANUAL        -----
5     IS-NR          Active        -----
6     IS-NR          Active        -----
7     IS-NR          Active        -----
8     IS-NR          Active        -----
9     IS-NR          Active        -----
10    IS-NR          Active        -----
11    IS-NR          Active        -----
12    IS-NR          Active        -----
13    OOS-MT-DSBLD   MANUAL        -----
14    OOS-MT-DSBLD   MANUAL        -----
15    OOS-MT-DSBLD   MANUAL        -----
16    OOS-MT-DSBLD   MANUAL        -----
Command Completed.
```

Refer to the *Commands Manual* to interpret the output.

2. Enable the terminal port with the following command:

*alw-trm:trm=**x***

where ***x*** is the serial port number.

If this action corrects the problem, you are done with this procedure.

3. Check the physical connections between the OAP and the LSMS. Make sure the connectors are firmly seated.

---

4. Check the physical connections between the OAP and the system. Make sure the connectors are firmly seated.

---

5. Enter the following command to verify the status of the LSMS:

rept-stat-lsms

A sample output follows:

```
RLGHNCXA03W 00-04-17 14:59:11 EST  Release 35.0.0
                          GPL        PST         SST           AST
------------------------------------------------------------------------
LSMS SYSTEM                          IS-ANR      Restricted    -----
TDM TRM           6                  IS-NR       Active        -----
OAP               A    220-001-000   OOS-MT      Isolated      -----
OAP               B    -----------   OOS-MT      Isolated      -----
Q.3 Assoc         A1                 IS-NR       Active        -----
Q.3 Assoc         B1                 OS-MT       Fault         -----

LSMS SYSTEM  ALARM STATUS = *C 0356  LSMS is unavailable
OAP A        ALARM STATUS = No Alarms.
OAP B        ALARM STATUS = ** 0341 OAP unavailable
Q.3 Assoc A1 ALARM STATUS = No Alarms.
Q.3 Assoc B1 ALARM STATUS = ** 0358 LSMS Q.3 association unavailable

Command Completed.
```

Refer to the *Commands Manual* to interpret the output.

---

6. If the problem still persists, reset the OAP by entering the following command.
init-oap:oap=x
where x is *a*,*b*, or *both*. See the Commands Manual for the correct usage.
This procedure is complete if the OAP comes back in-service within five minutes and the system clears the alarm.

---

7. Enter the following command to verify the status of the LSMS:

rept-stat-lsms

Refer to Step 5 for a sample output.

---

8. Enter the following command to inhibit the unavailable OAP terminal displayed in the output from Step 1:

inh-trm:trm=x

where x is the port number.
NOTE: The force parameter is required for the last OAP terminal inhibited.

---

9. Enter the following command for the inhibited OAP terminal:

chg-trm:trm=x:type=none

where x is the port number.

---

10. If the problem is still not corrected, reseat the TDM card. If the OAP still does not respond, replace the TDM card.

NOTE: See Appendix A, *Card Removal/Replacement Procedures* **for card replacement procedures.**

---

11. Enter the following command for each OAP terminal inhibited:

chg-trm:trm=x:type=oap

where x is the port number.

---

12. Enter the following command to return the OAP terminals to the in-service state:

alw-trm:trm=x

where x is the port number.

---

13. Enter the following command to verify the status of the LSMS:

rept-stat-lsms

Refer to Step 5 for a sample output.

---

14. If the LSMS is still not available, contact Tekelec Technical Services at the appropriate number.

Reference: “Customer Care Center” on page 1-13.

0357 - All OAP terminals are removed

Description

The OAP terminals have been modified to another type using the *chg-trm* command.

Example

```
RLGHNCXA21W 00-02-07 12:01:43 EST  EAGLE 35.0.0
0014.0357   LSMS SYSTEM           All OAP terminals are removed
```

Alarm Level

No alarm condition. The message is informational only.

Procedure

1. No further action is necessary.

0358 - LSMS Q.3 association unavailable

Description

An LSMS Q.3 association is not available.

Example

```
   RLGHNCXA21W 00-02-07 12:01:43 EST  EAGLE 35.0.0
** 0014.0358  **  LSMS  Q.3 Assoc. A1     LSMS Q.3 association unavailable
```

Alarm Level

Major

Procedure

1. Check the physical connections between the OAP and the LSMS. Make sure the connectors are firmly seated.

2. Enter the following command to verify the status of the LSMS:

rept-stat-lsms

A sample output follows:

```
RLGHNCXA03W 00-04-17 14:59:11 EST  Release 35.0.0
                          GPL        PST         SST           AST
------------------------------------------------------------------------
LSMS SYSTEM                          IS-ANR      Restricted    -----
TDM TRM           6                  IS-NR       Active        -----
OAP              A    220-001-000    OOS-MT      Isolated      -----
OAP              B    -----------    OOS-MT      Isolated      -----
Q.3 Assoc        A1                  IS-NR       Active        -----
Q.3 Assoc        B1                  OS-MT       Fault         -----

LSMS SYSTEM  ALARM STATUS = ** 0362  LSMS is at min service limit
OAP A        ALARM STATUS = No Alarms.
OAP B        ALARM STATUS = ** 0341 OAP unavailable
Q.3 Assoc A1 ALARM STATUS = No Alarms.
Q.3 Assoc B1 ALARM STATUS = ** 0358 LSMS Q.3 association unavailable

Command Completed.
```

Refer to the *Commands Manual* to interpret the output.

3. If the problem still persists, reset the OAP by entering the following command.
init-oap:oap=x
where x is *a*,*b* or *both*. See the *Commands Manual* for the correct usage.
This procedure is complete if the OAP comes back in-service within three minutes and the system clears the alarm.

---

4. Enter the following command to verify the status of the LSMS:

rept-stat-lsms

Refer to Step 2 for a sample output.

---

5. Enter the following command to inhibit the unavailable OAP terminal displayed in the output from Step 1:

inh-trm:trm=x

where x is the port number.
NOTE: The force parameter is required for the last OAP terminal inhibited.

---

6. Enter the following command for the inhibited OAP terminal:

chg-trm:trm=x:type=none

where x is the port number.

---

7. If the problem is still not corrected, reseat the TDM card. If the OAP still does not respond, replace the TDM card.

NOTE: See Appendix A, *Card Removal/Replacement Procedures* **for card replacement procedures.**

---

8. Enter the following command for each OAP terminal inhibited:

chg-trm:trm=x:type=oap

where x is the port number.

---

9. Enter the following command to return the OAP terminals to the in-service state:

alw-trm:trm=x

where x is the port number.

---

10. Enter the following command to verify the status of the LSMS:

rept-stat-lsms

Refer to Step 2 for a sample output.

---

11. If the LSMS Q.3 association is still not available, contact Tekelec Technical Services at the appropriate number.

Reference: “Customer Care Center” on page 1-13.

0359 - LSMS Q.3 association available

Description

A LSMS Q.3 association is available.

Example

```
RLGHNCXA21W 00-02-07 12:01:43 EST  EAGLE 35.0.0
0014.0359  LSMS  Q.3 Assoc. A1     LSMS Q.3 association available
```

Alarm Level

No alarm condition. The message is informational only.

Procedure

1. No further action is necessary.

0360 - EMS Agent unavailable

Description

An EMS agent is not available.

Example

```
        RLGHNCXA21W 00-02-07 11:02:30 EST  EAGLE 35.0.0
**      0100.0360  **  OAP B         EMS Agent unavailable
```

Alarm Level

Major

Procedure

1. Reset the OAP by entering the following command.
init-oap:oap=x
where x is *a*,*b*, or *both*. Refer to the *Commands Manual* for the correct usage.
This procedure is complete if the OAP comes back in-service within five minutes and the system clears the alarm.

2. Enter the following command to determine the reason for the failure:
rept-stat-lsms
Following is an example of the output:

```
RLGHNCXA03W 00-04-17 14:59:11 EST  Release 35.0.0
                          GPL        PST         SST           AST
------------------------------------------------------------------------
LSMS SYSTEM                          IS-ANR      Restricted    -----
TDM TRM           6                  IS-NR       Active        -----
OAP              A    220-001-000    OOS-MT      Isolated      -----
OAP              B    -----------    OOS-MT      Isolated      -----
Q.3 Assoc        A1                  IS-NR       Active        -----
Q.3 Assoc        B1                  OS-MT       Fault         -----

LSMS SYSTEM  ALARM STATUS = ** 0362  LSMS is at min service limit
OAP A        ALARM STATUS = No Alarms.
OAP B        ALARM STATUS = ** 0360 EMS Agent unavailable
Q.3 Assoc A1 ALARM STATUS = No Alarms.
Q.3 Assoc B1 ALARM STATUS = ** 0358 LSMS Q.3 association unavailable

Command Completed.
```

Refer to the *Commands Manual* to interpret the output.

3. Enter the following command to inhibit the unavailable OAP terminal displayed in the output from step 2:

   inh-trm:trm=x

   where x is the port number.
   NOTE: The force parameter is required for the last OAP terminal inhibited.

4. Enter the following command for the inhibited OAP terminal:

   chg-trm:trm=x:type=none

   where x is the port number.

5. If the problem is still not corrected, reseat the TDM card. If the OAP still does not respond, replace the TDM card.

   NOTE: See Appendix A, *Card Removal/Replacement Procedures* **for card replacement procedures.**

6. Enter the following command for each OAP terminal inhibited:

   chg-trm:trm=x:type=oap

   where x is the port number.

7. Enter the following command to return the OAP terminals to the in-service state:

   alw-trm:trm=x

   where x is the port number.

8. If the EMS agent is still not available, contact Tekelec Technical Services at the appropriate number.

   Reference: “Customer Care Center” on page 1-13.

0361 - EMS Agent available

Description

An EMS agent is available.

Example

```
RLGHNCXA21W 00-02-07 12:01:43 EST  EAGLE 35.0.0
0014.0361         OAP A          EMS Agent available
```

Alarm Level

No alarm condition. The message is informational only.

Procedure

1. No further action is necessary.

0362 - LSMS is at min. service limit

Description

Only one communication path is available to the LSMS.

Example

```
   RLGHNCXA21W 00-02-07 12:01:43 EST  EAGLE 35.0.0
** 0014.0362  **   LSMS SYSTEM         LSMS is at min. service limit
```

Alarm Level

Major

Procedure

1. Enter the following command to determine the reason for the failure:
rept-stat-lsms
Following is an example of the output:

```
RLGHNCXA03W 00-04-17 14:59:11 EST  Release 35.0.0
                         GPL        PST         SST           AST
-------------------------------------------------------------------------
LSMS SYSTEM                         IS-ANR      Restricted    -----
TDM TRM           6                 IS-NR       Active        -----
OAP              A    220-001-000   OOS-MT      Isolated      -----
OAP              B    -----------   OOS-MT      Isolated      -----
Q.3 Assoc        A1                 IS-NR       Active        -----
Q.3 Assoc        B1                 OS-MT       Fault         -----

LSMS SYSTEM  ALARM STATUS = ** 0362  LSMS is at min service limit
OAP A        ALARM STATUS = No Alarms.
OAP B        ALARM STATUS = ** 0341 OAP unavailable
Q.3 Assoc A1 ALARM STATUS = No Alarms.
Q.3 Assoc B1 ALARM STATUS = ** 0358 LSMS Q.3 association unavailable

Command Completed.
```

Refer to the *Commands Manual* to interpret the output.

2. If `0341 OAP unavailable` is output, follow the appropriate procedure.

Reference: 0341 - OAP Unavailable

3. If `0358 LSMS Q.3 association unavailable` is output, follow the appropriate procedure.

Reference: 0358 - LSMS Q.3 association unavailable

4. If `0354 OAP TDM Port unavailable` is output, follow the appropriate procedure.

   Reference: 0354 - One OAP terminal unavailable

5. If the problem is not solved, contact Tekelec Technical Services at the appropriate number.

   Reference: “Customer Care Center” on page 1-13.

0363 - OAP filesystem full

Description

One of the OAP file systems has exceeded a 95% threshold.

Example

```
     RLGHNCXA21W 94-02-07 12:01:43 EST  EAGLE 35.0.0
 *   0014.0363  * OAP A   OAP filesystem full.
```

Alarm Level

Minor

Procedure

1. Call Tekelec Technical Services at the appropriate number.

   Reference: “Customer Care Center” on page 1-13

0364 - Configuration data checksum mismatch

Description

This indicates the OAP configuration data does not match the OAP configuration data stored in the system database. There is a mismatch between the system and OAP databases.

Example

```
     RLGHNCXA21W 94-02-07 12:01:43 EST  EAGLE 35.0.0
*    0014.0364  * OAP A   Configuration data checksum mismatch
```

Alarm Level

Minor

Procedure

1. Enter the following command to retrieve the OAP configuration data stored in the system:

rtrv-oap-config

The output of the *rtrv-oap-config* command displays different fields depending on whether the SEAS feature is on, the LNP feature is on, or both features are on. The following output example shows both the SEAS and LNP features on.

```
rtrv-oap-config

    RLGHNCXA03W 99-01-07 00:57:31 EST EAGLE 35.0.0
    OAP CONFIGURATION REPORT

DATA               OAP A                 OAP B
Hostname           tekelec-8             tekelec-9
IP Address         128.132.064.015       128.132.064.016
IP Netmask         <Not Configured>      <Not Configured>
Default Router     <Not Configured>      <Not Configured>
Config             dual                  dual
SEAC CLLI          SEASNJPYRRC           SEASNJPYRRC
X25 Packet Size    7                     7
X25 Mode           DTE                   DTE
Active LSMS        shadow                shadow
Main LSMS NSAP     198.089.039.022       198.089.039.022
Main LSMS SSEL     emss                  emss
Main LSMS PSEL     emsp                  emsp
Shadow LSMS NSAP   198.089.039.023       198.089.039.023
Shadow LSMS SSEL   emss                  emss
Shadow LSMS PSEL   emsp                  emsp
    ;
```

2. Review the retrieved information, looking for errors or unprovisioned parameters. Table 3-21 lists OAP configuration parameters from the above output that must be provisioned if a given feature is on.

Table 3-21. OAP Configuration Parameters

Output	Legend	Feature
Hostname	Host name of OAP A or OAP B	LNP or SEAS
IP Address	IP address of OAP A or OAP B	LNP
IP Netmask	The netmask for OAP A or OAP B	Not required
Default Router	The IP address of the default router assigned to OAP A or OAP B	Not required
Config	The number of OAPs configured (single or dual)	LNP or SEAS
SEAC CLLI	The common language location identifier (CLLI) of the SEAC to which the OAP connects.	SEAS
X25 Packet Size	The X.25 package size for the link to the SEAC (7 or 8)	SEAS
X25 Mode	The mode of the X.25 link to the SEAC (DTE or DTC)	SEAS
Active LSMS	The LSMS associated with the OAP (main or shadow)	LNP
Main LSMS NSAP	The network service access point of the main LSMS (If **`lsms=shadow`**, this parameter set is not mandatory.)	LNP
Main LSMS SSEL	The session selector of the main LSMS (If **`lsms=shadow`**, this parameter set is not mandatory.)	LNP
Main LSMS PSEL	The presentation selector of the main LSMS (If **`lsms=shadow`**, this parameter set is not mandatory.)	LNP
Shadow LSMS NSAP	The network service access point of the shadow LSMS (If **`lsms=main`**, this parameter set is not mandatory.)	LNP
Shadow LSMS SSEL	The session selector of the shadow LSMS (If **`lsms=main`**, this parameter set is not mandatory.)	LNP
Shadow LSMS PSEL	The presentation selector of the shadow LSMS (If **`lsms=main`**, this parameter set is not mandatory.)	LNP

NOTE: If you find no errors or provision omissions, go to Step 4. If you find errors or provision omissions, contact your IS department to obtain the correct values and call Tekelec Technical Services at the appropriate number. Reference: “Customer Care Center” on page 1-13.

3. Enter the following command to update the OAP database:
   act-oap-config

4. If the fault does not clear, call Tekelec Technical Services at the appropriate number.
   Reference: “Customer Care Center” on page 1-13

0365 - Configuration data checksum alarm cleared

Description

This indicates that the system databases once out of sync are now back in sync.

Example

```
RLGHNCXA21W 94-02-07 12:01:43 EST  EAGLE 35.0.0
0014.0365   OAP A   Configuration data checksum alarm cleared
```

Alarm Level

No alarm condition. The message is informational only.

Procedure

1. This message indicates a previous fault has been corrected. No further action is necessary.

0366 - Temp Key(s) expiration alarm cleared

Description

This message indicates that there are no temporary keys currently in the expired state, and the alarm condition, specified by message “0368 - Temp Key(s) have expired,” has been cleared.

Example

```
RLGHNCXA21W 00-02-07 11:02:30 EST  EAGLE 5.0.0-32.0.0
0100.0366    SYSTEM     Temp Key(s) expiration alarm cleared
```

Alarm Level

No alarm condition. The message is informational only.

Procedure

1. This message indicates a previous fault has been corrected. No further action is necessary.

   NOTE: Further access to this controlled feature requires the purchase of a permanent key.

0367 - Temp Key(s) expiring soon

Description

This alarm indicates that one or more temporary keys used to enable a controlled feature will expire within the next seven days.

Example

```
      RLGHNCXA21W 00-02-07 11:02:30 EST  EAGLE 5.0.0-32.0.0
**    0100.0367    SYSTEM     Temp Key(s) expiring soon
```

Alarm Level

Major

Procedure

1. Enter the following command to retrieve information about controlled features:

rtrv-ctrl-feat:enable=temp

The output of the *rtrv-ctrl-feat:enable=temp* command displays information about the number of days left for temporarily enabled features.

Following is an example of the output:

```
The following features have been temporarily enabled:
RLGHNCXA03W 99-01-07 00:57:31 EST EAGLE 5.0.0-32.0.0
Feature Name             Partnum    Status  Quantity     Trial Period Left
TPS                    893000140  on      4000       6 days 5 hrs 3 mins
```

2. If you do nothing within the remaining trial period, the critical alarm, “0368 - Temp Key(s) have expired” will display when the trial period expires.

3. If you wish to acquire this feature permanently, you can purchase it from Tekelec. The alarm will be cleared when the purchased feature is enabled using the *enable-ctrl-feat* command.

0368 - Temp Key(s) have expired

Description

This alarm indicates that one or more temporary keys used to enable a controlled feature have expired.

Example

```
      RLGHNCXA21W 00-02-07 11:02:30 EST  EAGLE 5.0.0-32.0.0
*C    0100.0368    SYSTEM     Temp Key(s) have expired
```

Alarm Level

Critical

Procedure

1. Enter the following command to retrieve information about controlled features:

rtrv-ctrl-feat:expired=yes

The output of the *rtrv-ctrl-feat:expired=yes* command displays information about expired temporarily enabled features.

Following is an example of the output:

```
RLGHNCXA03W 99-01-07 00:57:31 EST EAGLE 5.0.0-32.0.0
The following features have expired temporary keys:
Feature Name              Part Num
TPS                     8930000140
```

2. You can enter the *chg-ctrl-feat:partnum=893xxxxxx:alarm=clear* command to clear this alarm.

3. If you wish to acquire this feature permanently, you can purchase it from Tekelec and enable it using the *enable-ctrl-feat* command. The alarm will clear when the purchased feature is installed with a permanent key.

0369 - REPT-T1F:FAC-T1 unavailable

Description

There is a problem at the far end and the far end is not communicating with the EAGLE 5 ISS.

Example

```
    RLGHNCXA21W 00-12-07 12:01:43 EST  EAGLE 35.0.0
**  0014.0369 ** T1PORT 1201,2     REPT-T1F:FAC-T1 unavailable
```

Alarm Level

Major

Procedure

1. Contact the far-end office to determine the cause and to correct the problem.

0370 - Critical Platform Failure(s)

Description

This message indicates the application running in the MPS server has detected a critical platform failure. The Alarm Data in the message contains a 16-character hexadecimal string in the format of h'1xxxxxxxxxxxxxx'. This alarm will be reset when UAM #250, MPS Available is issued.

Example

```
    station1234 00-09-30 16:28:08 EST EAGLE 35.0.0
*C  0259.0370 *C MPS B                Critical Platform Failure(s)
                 ALARM DATA = h'1000000000000008'
```

Alarm Level

Critical

Procedure

1. To decode the ALARM DATA included in this alarm, write down the Alarm Data string.

2. To decode the alarm and for the correct procedure to solve the problem, refer to the *MPS Platform Software and Maintenance Manual*.

3. This alarm will be reset when the problem is resolved and you receive UIM #250 MPS Available.

0371 - Critical Application Failure(s)

Description

This message indicates the application running in the MPS server has detected a critical application failure. The Alarm Data in the message contains a 16-character hexadecimal string in the format of h'2xxxxxxxxxxxxxx'. This alarm will be reset when UAM #250, MPS Available is issued.

Example

```
    station1234 00-09-30 16:28:08 EST EAGLE 35.0.0
*C   0259.0371 *C MPS B               Critical Application Failure(s)
                ALARM DATA = h'2000000000000001'
```

Alarm Level

Critical

Procedure

1. To decode the ALARM DATA included in this alarm, write down the Alarm Data string.

2. To decode the alarm and for the correct procedure to solve the problem, refer to the *MPS Platform Software and Maintenance Manual*.

3. This alarm will be reset when the problem is resolved and you receive UIM #250 MPS Available.

0372 - Major Platform Failure(s)

Description

This message indicates the application running in the MPS server has detected a major platform failure. The Alarm Data in the message contains a 16-character hexadecimal string in the format of h'3xxxxxxxxxxxxxx'. This alarm will be reset when UAM #250, MPS Available is issued.

Example

```
    station1234 00-09-30 16:28:08 EST EAGLE 35.0.0
**  0259.0372 ** MPS B                Major Platform Failure(s)
                 ALARM DATA = h'3000000000000002'
```

Alarm Level

Major

Procedure

1. To decode the ALARM DATA included in this alarm, write down the Alarm Data string.

2. To decode the alarm and for the correct procedure to solve the problem, refer to the *MPS Platform Software and Maintenance Manual*.

3. This alarm will be reset when the problem is resolved and you receive UIM #250 MPS Available.

0373 - Major Application Failure(s)

Description

This message indicates the application running in the MPS server has detected a major application failure. The Alarm Data in the message contains a 16-character hexadecimal string in the format of h'4xxxxxxxxxxxxxx'. This alarm will be reset when UAM #250, MPS Available is issued.

Example

```
     station1234 00-09-30 16:28:08 EST EAGLE 35.0.0
**   0259.0373 ** MPS B               Major Application Failure(s)
                  ALARM DATA = h'4000000000000008'
```

Alarm Level

Major

Procedure

1. To decode the ALARM DATA included in this alarm, write down the Alarm Data string.

2. To decode the alarm and for the correct procedure to solve the problem, refer to the *MPS Platform Software and Maintenance Manual*.

3. This alarm will be reset when the problem is resolved and you receive UIM #250 MPS Available.

0374 - Minor Platform Failure(s)

Description

This message indicates the application running in the MPS server has detected a minor platform failure. The Alarm Data in the message contains a 16-character hexadecimal string in the format of h'5xxxxxxxxxxxxxx'. This alarm will be reset when UAM #250, MPS Available is issued.

Example

```
    station1234 00-09-30 16:28:08 EST EAGLE 35.0.0
*   0259.0374 *  MPS B                Minor Platform Failure(s)
                 ALARM DATA = h'5000000000000004'
```

Alarm Level

Minor

Procedure

1. To decode the ALARM DATA included in this alarm, write down the Alarm Data string.

2. To decode the alarm and for the correct procedure to solve the problem, refer to the *MPS Platform Software and Maintenance Manual*.

3. This alarm will be reset when the problem is resolved and you receive UIM #250 MPS Available.

0375 - Minor Application Failure(s)

Description

This message indicates the application running in the MPS server has detected a minor application failure. The Alarm Data in the message contains a 16-character hexadecimal string in the format of h'6xxxxxxxxxxxxxx'. This alarm will be reset when UAM #250, MPS Available is issued.

Example

```
    station1234 00-09-30 16:28:08 EST EAGLE 35.0.0
*   0259.0375 *  MPS B                Minor Application Failure(s)
                 ALARM DATA = h'6000000000000001'
```

Alarm Level

Minor

Procedure

1. To decode the ALARM DATA included in this alarm, write down the Alarm Data string.

2. To decode the alarm and for the correct procedure to solve the problem, refer to the *MPS Platform Software and Maintenance Manual*.

3. This alarm will be reset when the problem is resolved and you receive UIM #250 MPS Available.

0376 - REPT-T1F:FAC-T1 LOS failure

Description

No signal is being received on the T1 Port.

Example

```
    RLGHNCXA21W 00-12-07 12:01:43 EST  EAGLE 35.0.0
**  0014.0376 ** T1PORT 1201,2   REPT-T1F:FAC-T1 LOS failure
```

Alarm Level

Major

Procedure

1. Check the physical connections.

0377 - REPT-T1F:FAC-T1 LOF failure

Description

The 7-bit frame alignment signal does not match the pattern the EAGLE 5 ISS is expecting.

Example

```
    RLGHNCXA21W 00-12-07 12:01:43 EST  EAGLE 35.0.0
**  0014.0377 ** T1PORT 1201,2   REPT-T1F:FAC-T1 LOF failure
```

Alarm Level

Major

Procedure

1. Contact the far-end office to correct their framing problem.

0378 - REPT-T1F:FAC-T1 Remote Alarm

Description

This indicates there is some type of failure on the far end.

Example

```
    RLGHNCXA21W 00-12-07 12:01:43 EST  EAGLE 35.0.0
**  0014.0378 ** T1PORT 1201,2   REPT-T1F:FAC-T1 Remote Alarm
```

Alarm Level

Major

Procedure

1. Contact the far-end office to determine the cause and to correct the problem.

0379 - REPT-T1F:FAC-T1 Alarm

Description

The far end is transmitting an alarm indication signal (AIS) due to an excessive bit error rate, loss of signal, or loss of frame.

Example

```
    RLGHNCXA21W 00-12-07 12:01:43 EST  EAGLE 35.0.0
**  0014.0379 ** T1PORT 1201,2     REPT-T1F:FAC-T1 Alarm
```

Alarm Level

Major

Procedure

1. Contact the far-end office to determine the cause of the AIS and to correct the problem.

0380 - RCVRY-T1F:FAC-T1 available

Description

The T1 port 1 is back in-service.

Example

```
RLGHNCXA21W 00-12-07 12:01:43 EST  EAGLE 35.0.0
0014.0380    T1PORT 1201,2    RCVRY-T1F:FAC-T1 available
```

Alarm Level

No alarm condition. The message is informational only.

Procedure

1. This message indicates a previous fault has been corrected. No further action is necessary.

0381- REPT-E1F:FAC-E1 LOS failure

Description

No signal is being received on the signaling link.

Example

```
    RLGHNCXA21W 00-12-07 12:01:43 EST  EAGLE 35.0.0
**  0014.0381 ** E1PORT 1201,2   REPT-E1F:FAC-E1 LOS failure
```

Alarm Level

Major

Procedure

1. Check the physical connections.

0382- REPT-E1F:FAC-E1 LOF failure

Description

The 7-bit frame alignment signal does not match the pattern the EAGLE 5 ISS is expecting.

Example

```
    RLGHNCXA21W 00-12-07 12:01:43 EST  EAGLE 35.0.0
**  0014.0382 ** E1PORT 1201,2   REPT-E1F:FAC-E1 LOF failure
```

Alarm Level

Major

Procedure

1. Contact the far-end office to correct their framing problem.

0383- REPT-E1F:FAC-E1 AIS detected

Description

The far end is transmitting an alarm indication signal (AIS) due to an excessive bit error rate, loss of signal, or loss of frame.

Example

```
    RLGHNCXA21W 00-12-07 12:01:43 EST  EAGLE 35.0.0
**  0014.0383 ** E1PORT 1201,2   REPT-E1F:FAC-E1 AIS detected
```

Alarm Level

Major

Procedure

1. Contact the far-end office to determine the cause of the AIS and to correct the problem.

0384- REPT-E1F:FAC-E1 Far End failure

Description

This indicates there is some type of failure on the far end.

Example

```
    RLGHNCXA21W 00-12-07 12:01:43 EST  EAGLE 35.0.0
**  0014.0384 ** E1PORT 1201,2   REPT-E1F:FAC-E1 Far End failure
```

Alarm Level

Major

Procedure

1. Contact the far-end office to determine the cause and to correct the problem.

0385- REPT-E1F:FAC-E1 10E-3 BER failed

Description

A framing bit error rate is maintained for in-service links because the error rate is high.

Example

```
    RLGHNCXA21W 00-12-07 12:01:43 EST  EAGLE 35.0.0
**  0014.0385 ** E1PORT 1201,2   REPT-E1F:FAC-E1 10E-3 BER failed
```

Alarm Level

Major

Procedure

1. Contact the far-end office to determine the cause of the high framing bit error rate.

0386- RCVRY-E1F:FAC-E1 available

Description

The E1 port 1 is back in-service.

Example

```
RLGHNCXA21W 00-12-07 12:01:43 EST  EAGLE 35.0.0
0014.0386    E1PORT 1201,2    RCVRY-E1F:FAC-E1 available
```

Alarm Level

No alarm condition. The message is informational only.

Procedure

1. This message indicates a previous fault has been corrected. No further action is necessary.

0387 - REPT-E1F:FAC-E1 unavailable

Description

There is a problem at the far end and the far end is not communicating with the EAGLE 5 ISS.

Example

```
    RLGHNCXA21W 00-12-07 12:01:43 EST  EAGLE 35.0.0
**  0014.0387 ** E1PORT 1201,2     REPT-E1F:FAC-E1 unavailable
```

Alarm Level

Major

Procedure

1. Contact the far-end office to determine the cause and to correct the problem.

0388 - Illegal Address Error has Cleared

Description

This message indicates the clearing of a prior illegal address error. Previously, the HMUX-assigned shelf ID address received from OAM did not match the value read from the Assigned Shelf Address Register, resulting in major alarm UAM #0390. This message shows the previous alarm has cleared.

Example

```
station1234 00-11-30 16:28:08 EST  EAGLE 35.0.0
0012.0388        CARD 1109 HMUX    Illegal Address Error has Cleared
```

Alarm Level

No alarm condition. The message is informational only.

Procedure

1. This message indicates a previous fault, which was indicated by UAM #0390, has been corrected. No further action is necessary.

0389 - Card responding normally

Description

This message indicates the clearing of a prior HMUX/HIPR not responding error. Previously, an HMUX/HIPR was not responding to polls from the OAM, resulting in major alarm UAM #0391. This message shows the previous alarm has cleared.

Example

```
station1234 00-11-30 16:28:08 EST  EAGLE 35.0.0
0012.0389      CARD 1209 HIPR Card responding normally
```

Alarm Level

No alarm condition. The message is informational only.

Procedure

1. This message indicates a previous fault, which was indicated by UAM #0391, has been corrected. No further action is necessary.

0390 - Illegal Address Error

Description

This message indicates an HMUX (High Speed Multiplexer) illegal address error. The ATH (Application Trouble Handler) displays this alarm when an HMUX-assigned shelf ID address, which was received from OAM and written to the Assigned Shelf Address Register, did not match the value read from the Assigned Shelf Address Register. Furthermore, the error was not corrected after an automatic attempt to correct the address discrepancy.

Example

```
   station1234 00-11-30 16:28:08 EST  EAGLE 35.0.0
**  0012.0390  **  CARD 1109 HMUX Illegal Address Error
```

Alarm Level

Major

Procedure

1. Reset the HMUX card in question by entering the command:

   init-mux:loc=xy09 (or *loc=xy10*)

   This command resets the card, but it does not take down the IMT bus on which the card resides; operation of the bus is unaffected by this command.

2. If the problem persists, then you should reseat the HMUX card in question. Remember that this action will take down the IMT bus of the HMUX card.

3. If the problem remains, the card must be replaced. Contact Tekelec Technical Support.

   Reference: “Customer Care Center” on page 1-13.

0391 - Card not responding Error

Description

This message indicates an HMUX (High Speed Multiplexer) /HIPR (High-Speed IMT Packet Router) is not responding. This alarm is displayed when an HMUX/HIPR in a provisioned shelf card does not respond.

Example

```
   station1234 00-11-30 16:28:08 EST  EAGLE 35.0.0
**  0012.0391 **  CARD 1109 HIPR Card not responding Error
```

Alarm Level

Major

Procedure

1. Reset the HMUX/HIPR card in question by entering the command:

init-mux:loc=xy09 (or *loc=xy10*)

This command resets the card, but it does not take down the IMT bus on which the card resides; operation of the bus is unaffected by this command.

2. If the problem persists, then you should reseat the HMUX/HIPR card in question. Remember that this action will take down the IMT bus of the HMUX/HIPR card.

3. If the problem remains, the card must be replaced. Contact Tekelec Technical Support.

Reference: “Customer Care Center” on page 1-13.

0392 - OA&M IP Security feature is OFF

Description

The EAGLE 5 ISS OA&M IP Security Enhancements Feature is not turned on. One of the following occurred: and OAM init, or OAM role change, or the `chg-ctrl-feat` command turned the feature off.

With this feature not operating, you do not have the tools to securely pass data across an otherwise non-secure network. Until the EAGLE 5 ISS OA&M IP Security Enhancements Feature is restored, the EAGLE 5 ISS cannot provide secure connections from approved clients, and does not protect sensitive passwords and information while in transit between the EAGLE 5 ISS and a host.

Example

```
    RLGHNCXA21W 03-03-03 12:01:43 EST  EAGLE 35.0.0
**  0047.0392 ** SECURITY SYSTEM         OA&M IP Security feature status is OFF
```

Alarm Level

Major

Procedure

1. To restore the OA&M IP Security Enhancements feature, you turn it on permanently. To turn the feature on, use the `enable-ctrl-feat` command.

0393 - OA&M IP Security feature is ON

Description

The EAGLE 5 ISS OA&M IP Security Enhancements Feature is turned on. This UAM is an informational message that confirms that the feature is restored to operational status.

With this feature operating, you have the tools to securely pass data across an otherwise non-secure network. With the EAGLE 5 ISS OA&M IP Security Enhancements Feature operational, the EAGLE 5 ISS can provide secure connections from approved clients, and protects sensitive passwords and information while in transit between the EAGLE 5 ISS and a host.

Example

```
RLGHNCXA21W 03-03-03 12:01:43 EST  EAGLE 35.0.0
0047.0393    SECURITY SYSTEM         OA&M IP Security feature status is ON
```

Alarm Level

No alarm condition. The message is informational only.

Procedure

1. This message indicates that the feature previously was OFF and now has been turned ON. No further action is necessary.

0394 - Local Subsystem is available

Description

This message indicates that a problem with the INP subsystem has been corrected.

Example

```
RLGHNCXA21W 00-02-07 12:01:43 EST  EAGLE 35.0.0
0056.0394     INP SYSTEM    Local Subsystem is available
```

Alarm Level

No alarm condition. The message is informational only.

Procedure

1. This message indicates a previous fault has been corrected. No further action is necessary.

0395 - Local Subsystem is not available

Description

The INP subsystem is not available. There are no IS-NR VSCCP cards associated with this INP subsystem. The INP subsystem was not taken off-line via command.

Example

```
     RLGHNCXA21W 00-02-07 12:01:43 EST  EAGLE 35.0.0
*C   0056.0395  *C  INP SYSTEM    Local Subsystem  is not available
```

Alarm Level

Critical

Procedure

1. Enter the following command to verify the status and location of the subsystem cards.

   rept-stat-mps

2. Enter the following command to move the VSCCP cards to an ACTIVE status if loading is successful:

   rst-card:loc=xxxx
   xxxx is the location of the OOS-MT-DSBLD VSCCP card(s) identified in step 1.

3. Enter the following command to verify the status and location of the subsystem cards.

   rept-stat-mps

4. Verify the VSCCP card(s) reset in step 2 are IS-NR. If not, reseat the card(s).

5. If any card(s) remain OOS-MT, replace the card(s).

   NOTE: See Appendix A, *Card Removal/Replacement Procedures* **for card replacement procedures.**

0396 - Local Subsystem is disabled

Description

The INP subsystem has been manually disabled using the *inh-map-ss* command.

Example

```
     RLGHNCXA21W 00-02-07 12:01:43 EST  EAGLE 35.0.0
*C   0056.0396  *C  INP SYSTEM      Local Subsystem  is disabled
```

Alarm Level

Critical

Procedure

1. Enter the following command to verify the status and location of the INP subsystem cards.

   rept-stat-mps

2. Enter the following command to to reserve the subsystem number and to change the state of the INP subsystem status to on-line:

   ent-ss-appl:appl=inp:ssn=xx:stat=online
   xx is primary subsystem number.

3. Enter the following command to change the state of the INP subsystem to on-line:
   alw-map-ss:ssn=xx
   xx is primary subsystem number.

4. Enter the following command to verify the status of the INP subsystem.

   rept-stat-mps

0397 - Local Subsystem is removed

Description

The INP subsystem is not fully equipped. There are no VSCCP cards configured with this INP subsystem.

Example

```
RLGHNCXA21W 00-02-07 12:01:43 EST  EAGLE 35.0.0
0056.0397      INP SYSTEM      Local Subsystem  is removed
```

Alarm Level

No alarm condition. The message is informational only.

Procedure

1. Verify the VSCCP hardware. Configure the INP system with VSCCP cards.

NOTE: See Appendix A, *Card Removal/Replacement Procedures* **for card replacement procedures.**

0398 - Local Subsystem normal,card(s) abnormal

Description

One or more of the VSCCP cards do not have an ACTIVE status.

Example

```
    RLGHNCXA21W 00-02-07 12:01:43 EST  EAGLE 35.0.0
 *  0056.0398  *   INP SYSTEM   Local Subsystem normal,card(s) abnormal
```

Alarm Level

Minor

Procedure

1. Enter the following command to verify the status and location of the subsystem cards.

rept-stat-mps

2. Enter the following command to move the VSCCP card to an ACTIVE status if loading is successful:

rst-card:loc=xxxx
xxxx is the location of the OOS-MT-DSBLD VSCCP card(s) identified in step 1.

3. Enter the following command to verify the status and location of the subsystem cards.

rept-stat-mps

4. Verify the VSCCP card(s) reset in step 2 are IS-NR. If not, reseat the card(s).

5. If any card(s) remain OOS-MT, replace the card(s).

NOTE: See Appendix A, *Card Removal/Replacement Procedures* **for card replacement procedures.**

0399 - RCVRY-LKSTO:Alarm clr’d by deleting SLK

Description

A signaling link (SLK) that was out of service and had an outstanding alarm has been deleted from the database. The alarm is cleared.

Example

```
RLGHNCXA21W 00-02-07 12:01:43 EST  EAGLE 35.0.0
0014.0399    LSN a24546   RCVRY-LKSTO:Alarm clr’d by deleting SLK
```

Alarm Level

No alarm condition. The message is informational only.

Procedure

1. This message indicates a previous fault has been corrected. No further action is necessary.

0400 - Alarm cleared by deleting card

Description

A card that was out of service and had an outstanding alarm has been deleted from the system database. The alarm is cleared.

Example

```
RLGHNCXA21W 00-02-07 12:01:43 EST  EAGLE 35.0.0
0014.0400    CARD 1202 SCCP      Alarm cleared by deleting card
```

Alarm Level

No alarm condition. The message is informational only.

Procedure

1. This message indicates a previous failure has been corrected. No further action is necessary.

0401 - Alarm cleared by deleting SLK

Description

A signaling link (SLK) that was out of service and had an outstanding alarm has been deleted from the database. The alarm is cleared.

Example

```
RLGHNCXA21W 00-02-07 12:01:43 EST  EAGLE 35.0.0
0014.0401    SLK 1205,A SS7ANSI  Alarm cleared by deleting SLK
           SLC=01   FECLLI=A1234567890
```

Alarm Level

No alarm condition. The message is informational only.

Procedure

1. This message indicates a previous fault has been corrected. No further action is necessary.

0402 - Alarm cleared by deleting route

Description

A route that was out of service and had an outstanding alarm has been deleted from the database. The alarm is cleared.

Example

```
RLGHNCXA21W 00-02-07 12:01:43 EST  EAGLE 35.0.0
0014.0402    DPC 001-001-001     Alarm cleared by deleting route
```

Alarm Level

No alarm condition. The message is informational only.

Procedure

1. This message indicates a previous fault has been corrected. No further action is necessary.

0403 - 1114 E1/T1 clock requires TDM-GTI

Description

This message indicates that the high speed clock is provisioned as T1 framed, E1 framed, or E1 unframed. A non TDM-GTI card has been placed in this system where recovered clocks are provisioned. The TDM-GTI version of the TDM card is required.

Example

```
     station1234 99-03-05 16:28:08 EST  EAGLE 35.0.0
**   0052.0403 ** HS CLOCK SYSTEM  1114 E1/T1 clock requires TDM-GTI
```

Alarm Level

Major

Procedure

1. Perform one of the following:
   Replace the card in location 1114 with a TDM-GTI card. Refer to "Terminal Disk Module (TDM)/TDM-GTI" on page A-47 for the replacement procedure.

   OR

   Use the *chg-stpopts* command to change the `hsclksrc` parameter to `RS422`. Refer to the *Commands Manual* for proper usage of the command.

0404 - 1116 E1/T1 clock requires TDM-GTI

Description

This message indicates that the high speed clock is provisioned as T1 framed, E1 framed, or E1 unframed. A non TDM-GTI card has been placed in this system where recovered clocks are provisioned. The TDM-GTI version of the TDM card is required.

Example

```
     station1234 99-03-05 16:28:08 EST  EAGLE 35.0.0
**   0052.0404 ** HS CLOCK SYSTEM  1116 E1/T1 clock requires TDM-GTI
```

Alarm Level

Major

Procedure

1. Perform one of the following:
   Replace the card in location 1116 with a TDM-GTI card. Refer to "Terminal Disk Module (TDM)/TDM-GTI" on page A-47 for the replacement procedure.

   OR

   Use the *chg-stpopts* command to change the HSCLKSRC parameter to RS422. Refer to the *Commands Manual* for proper usage of the command.

0405 - 1114, 1116 E1/T1 clock requires TDM-GTI

Description

This message indicates that the high speed clock is provisioned as T1 framed, E1 framed, or E1 unframed. A non TDM-GTI card has been placed in this system in slots 1114 and 1116 where recovered clocks are provisioned. The TDM-GTI version of the TDM card is required.

Example

```
     station1234 99-03-05 16:28:08 EST  EAGLE 35.0.0
**   0052.0405 ** HS CLOCK SYSTEM  1114, 1116 E1/T1 clock requires TDM-GTI
```

Alarm Level

Major

Procedure

1. Perform one of the following:
   Replace the cards in locations 1114 and 1116 with a TDM-GTI card. Refer to "Terminal Disk Module (TDM)/TDM-GTI" on page A-47 for the replacement procedure.

   OR

   Use the *chg-stpopts* command to change the HSCLKSRC parameter to RS422. Refer to the *Commands Manual* for proper usage of the command.

0406 - 1114 Clock selection mismatch

Description

This message indicates that the database has been restored and the provisioned clocks do not match what is running on the TDM.

Example

```
     station1234 99-03-05 16:28:08 EST  EAGLE 35.0.0
 **  0052.0406 ** HS CLOCK SYSTEM  1114 Clock selection mismatch
```

Alarm Level

Major

Procedure

1. Enter the following command to determine the current clock settings on the TDM.

rept-stat-clk

Following is an example of the output:

```
    rept-stat-clk
    Command entered at terminal #3.
;

    tekelecstp 99-03-05 13:34:15 EST EAGLE 35.0.0
    CARD LOC= 1114 (Active   )       CARD LOC= 1116 (Isolated )
    PRIMARY BITS      = Active        PRIMARY BITS      = -----
    SECONDARY BITS    = Idle          SECONDARY BITS    = -----
    HS PRIMARY CLK    = Active        HS PRIMARY CLK    = -----
    HS SECONDARY CLK  = Idle          HS SECONDARY CLK  = -----
    HS CLK TYPE       = E1 UNFRAMED   HS CLK TYPE       = -----
    HS CLK LINELEN    = SHORTHAUL     HS CLK LINELEN    = -----

                                      PST           SST       AST
    SYSTEM CLOCK                      IS-NR         ACTIVE    ALMINH
    ALARM STATUS     = No Alarms.
    # Cards using CLK A = 009         # Cards with bad CLK A = 000
    # Cards using CLK B = 000         # Cards with bad CLK B = 009
    # Cards using CLK I = 000

                                      PST           SST       AST
    HS SYSTEM CLOCK                   IS-NR         ACTIVE    ALMINH
    ALARM STATUS     = No Alarms.
    # Cards using HSCLK A = 001       # Cards with bad HSCLK A = 000
    # Cards using HSCLK B = 000       # Cards with bad HSCLK B = 002
    # Cards using HSCLK I = 000

    Command Completed.
```

2. Use the *chg-stpopts* command to update the database to match output from the previous command. Refer to the *Commands Manual* for proper usage of the command.

0407 - 1116 Clock selection mismatch

Description

This message indicates that the database has been restored and the provisioned clocks do not match what is running on the TDM.

Example

```
     station1234 99-03-05 16:28:08 EST  EAGLE 35.0.0
 **  0052.0407 ** HS CLOCK SYSTEM  1116 Clock selection mismatch
```

Alarm Level

Major

Procedure

1. Enter the following command to determine the current clock settings on the TDM.

rept-stat-clk

Following is an example of the output:

```
    rept-stat-clk
    Command entered at terminal #3.
;

    tekelecstp 99-03-05 13:34:15 EST EAGLE 35.0.0
    CARD LOC= 1114 (Active   )       CARD LOC= 1116 (Isolated )
    PRIMARY BITS      = Active        PRIMARY BITS      = -----
    SECONDARY BITS    = Idle          SECONDARY BITS    = -----
    HS PRIMARY CLK    = Active        HS PRIMARY CLK    = -----
    HS SECONDARY CLK  = Idle          HS SECONDARY CLK  = -----
    HS CLK TYPE       = E1 UNFRAMED   HS CLK TYPE       = -----
    HS CLK LINELEN    = SHORTHAUL     HS CLK LINELEN    = -----

                                      PST           SST       AST
    SYSTEM CLOCK                      IS-NR         ACTIVE    ALMINH
    ALARM STATUS     = No Alarms.
    # Cards using CLK A = 009         # Cards with bad CLK A = 000
    # Cards using CLK B = 000         # Cards with bad CLK B = 009
    # Cards using CLK I = 000

                                      PST           SST       AST
    HS SYSTEM CLOCK                   IS-NR         ACTIVE    ALMINH
    ALARM STATUS     = No Alarms.
    # Cards using HSCLK A = 001       # Cards with bad HSCLK A = 000
    # Cards using HSCLK B = 000       # Cards with bad HSCLK B = 002
    # Cards using HSCLK I = 000

    Command Completed.
```

2. Use the *chg-stpopts* command to update the database to match output from the previous command. Refer to the *Commands Manual* for proper usage of the command.

0408 - 1114, 1116 Clock selection mismatch

Description

This message indicates that the database has been restored and the provisioned clocks do not match what is running on the TDM.

Example

```
     station1234 99-03-05 16:28:08 EST  EAGLE 35.0.0
 **  0052.0408 ** HS CLOCK SYSTEM  1114, 1116 Clock selection mismatch
```

Alarm Level

Major

Procedure

1. Enter the following command to determine the current clock settings on the TDM.

rept-stat-clk

Following is an example of the output:

```
    rept-stat-clk
    Command entered at terminal #3.
;

    tekelecstp 99-03-05 13:34:15 EST EAGLE 35.0.0
    CARD LOC= 1114 (Active   )       CARD LOC= 1116 (Isolated )
    PRIMARY BITS      = Active        PRIMARY BITS      = -----
    SECONDARY BITS    = Idle          SECONDARY BITS    = -----
    HS PRIMARY CLK    = Active        HS PRIMARY CLK    = -----
    HS SECONDARY CLK  = Idle          HS SECONDARY CLK  = -----
    HS CLK TYPE       = E1 UNFRAMED   HS CLK TYPE       = -----
    HS CLK LINELEN    = SHORTHAUL     HS CLK LINELEN    = -----

                                      PST           SST       AST
    SYSTEM CLOCK                      IS-NR         ACTIVE    ALMINH
    ALARM STATUS     = No Alarms.
    # Cards using CLK A = 009         # Cards with bad CLK A = 000
    # Cards using CLK B = 000         # Cards with bad CLK B = 009
    # Cards using CLK I = 000

                                      PST           SST       AST
    HS SYSTEM CLOCK                   IS-NR         ACTIVE    ALMINH
    ALARM STATUS     = No Alarms.
    # Cards using HSCLK A = 001       # Cards with bad HSCLK A = 000
    # Cards using HSCLK B = 000       # Cards with bad HSCLK B = 002
    # Cards using HSCLK I = 000

    Command Completed.
```

2. Use the *chg-stpopts* command to update the database to match output from the previous command. Refer to the *Commands Manual* for proper usage of the command.

0409 - Clock configuration corrected

Description

This message indicates that a problem with the high speed clock configuration database has been corrected.

Example

```
station1234 99-03-05 16:28:08 EST  EAGLE 35.0.0
0052.0409    HS CLOCK SYSTEM      Clock configuration corrected
```

Alarm Level

No alarm condition. The message is informational only.

Procedure

1. This message indicates a previous fault has been corrected. No further action is necessary.

0422 - Insufficient extended memory

Description

At least one SCCP card does not have enough memory for the LNP application. Loading of the SCCP card is automatically inhibited.

Example

```
     RLGHNCXA21W 00-02-07 11:02:30 EST  EAGLE 35.0.0
**   0100.0422 ** CARD  1113 SCCP  Insufficient extended memory
                  HW VERIFICATION CODE: xxx
```

Alarm Level

Major

Procedure

1. If this message contains the optional line ‘HW VERIFICATION CODE: xxx’:

- Go to Appendix E, Auto-Inhibit HW Verification Codes, and decode the xxx value in Table E-1. Correct the indicated problem.
- After correcting the problem, the card will be in *out-of-service maintenance disabled state* (OOS-MT-DSBLD). Restore the card back to *in-service normal state* (IS-NR) with the `alw-card` command.

If this message does not contain the optional line ‘HW VERIFICATION CODE: xxx’, continue with the next step.

2. Verify the SCCP hardware. Verify the SCCP cards have at least 256M of memory.

3. If necessary, replace the SCCP card with the correct combination of motherboard and daughterboard.

NOTE: See Appendix A for card replacement procedures.

0423 - Card reload attempted

Description

Card loading is no longer inhibited. The once inhibited card is now attempting to load.

Example

```
RLGHNCXA21W 00-02-07 11:02:30 EST  EAGLE 35.0.0
0100.0423    CARD  1108 SCCP   Card reload attempted
```

Alarm Level

No alarm condition. The message is informational only.

Procedure

1. No further action is necessary.

0424 - LNP Subsystem is not available

Description

The LNP subsystem is not available. There are no IS-NR SCCP cards associated with this LNP subsystem. The LNP subsystem was not taken off-line via command.

Example

```
     RLGHNCXA21W 00-02-07 12:01:43 EST  EAGLE 35.0.0
*C   0056.0424  *C  LNP SYSTEM      LNP Subsystem  is not available
```

Alarm Level

Critical

Procedure

1. Enter the following command to verify the status and location of the subsystem cards.

rept-stat-lnp

2. Enter the following command to move the SCCP cards to an ACTIVE status if loading is successful:

rst-card:loc=xxxx
where *xxxx* is the location of the OOS-MT-DSBLD SCCP card(s) identified in Step 1.

3. Enter the following command to verify the status and location of the subsystem cards.

rept-stat-lnp

4. Verify the SCCP card(s) reset in Step 2 are IS-NR. If not, reseat the card(s).

5. If any card(s) remain OOS-MT, replace the card(s).

NOTE: See Appendix A, *Card Removal/Replacement Procedures* **for card replacement procedures.**

0425 - LNP Subsystem normal, card(s) abnormal

Description

One or more of the SCCP cards do not have an ACTIVE status.

Example

```
RLGHNCXA21W 00-02-07 12:01:43 EST  EAGLE 35.0.0
0056.0425      LNP SYSTEM   LNP Subsystem normal, card(s) abnormal
```

Alarm Level

No alarm condition. The message is informational only

Procedure

1. Enter the following command to verify the status and location of the subsystem cards.

   rept-stat-lnp

2. Enter the following command to move the SCCP card to an ACTIVE status if loading is successful:

   rst-card:loc=xxxx
   where *xxxx* is the location of the OOS-MT-DSBLD SCCP card(s) identified in Step 1.

3. Enter the following command to verify the status and location of the subsystem cards.

   rept-stat-lnp

4. Verify the SCCP card(s) reset in Step 2 are IS-NR. If not, reseat the card(s).

5. If any card(s) remain OOS-MT, replace the card(s).

   NOTE: See Appendix A, *Card Removal/Replacement Procedures* **for card replacement procedures.**

0426 - LNP Subsystem is available

Description

This message indicates that a problem with LNP system has been corrected.

Example

```
RLGHNCXA21W 00-02-07 12:01:43 EST  EAGLE 35.0.0
0056.0426     LNP SYSTEM    LNP Subsystem is available
```

Alarm Level

No alarm condition. The message is informational only.

Procedure

1. This message indicates a previous fault has been corrected. No further action is necessary.

0427 - LNP database corrupted

Description

The LNP audit on an OAM card detects that the current LNP database on that card is corrupt.

Example

```
        RLGHNCXA21W 00-02-07 11:02:30 EST  EAGLE 35.0.0
 *      0100.0427 * CARD  1114 OAM      LNP database corrupted
```

Alarm Level

Minor

Procedure

1. Enter the following command to verify the status of the LNP database:

rept-stat-db

The following is an example of output for a corrupted database.

```
> rept-stat-db

Command Accepted - Processing

    oflnmoxa11w 00-10-08 15:56:40 CDT EAGLE 35.0.0
    rept-stat-db
    Command entered at terminal #4.
;

    oflnmoxa11w 00-10-08 15:56:40 CDT EAGLE 35.0.0
    DATABASE STATUS: >> NOT OK <<
           TDM 1114 ( STDBY)                TDM 1116 ( ACTV )
            C   LEVEL    TIME LAST BACKUP     C   LEVEL    TIME LAST BACKUP
            - -------- --------------------  - -------- --------------------
   FD BKUP  Y   342256 00-10-07 00:40:29 CDT  Y   342256 00-10-07 00:40:29 CDT
   FD CRNT  N   342374 CORRUPT                Y   342375
           MDAL 1117
            - --------
```

2. Enter the following command to retrieve the terminal types and port numbers:

rtrv-trm

3. Enter the following command to inhibit each OAP terminal displayed in the output from Step 2:

inh-trm:trm=x

where x is the port number.
NOTE: The force parameter is required for the last OAP terminal inhibited.

---

4. Enter the following command for the inhibited OAP terminal:

chg-trm:trm=x:type=none

where x is the port number.

---

5. If the message indicates the active fixed disk is corrupt, continue with Step 6.
If the message indicates the standby fixed disk is corrupt, continue with Step 7.
If the message indicates that both fixed disks are corrupt, continue with Step 8.

---

6. Enter the following command only if the active OAM has the corruption problem. This command will force the active OAM card to standby:

init-card:loc=xxxx
where *xxxx* is the location of the card identified in output.

---

7. Enter the following command to copy the database partitions from the active disk to the standby disk:

chg-db:action=repair

Continue with Step 10.
NOTE: Continue with Step 8 if repair is impossible or fails.

CAUTION: Contact Tekelec Technical Services at the appropriate number before entering the *chg:db:action=restore* command. For additional information about this command, refer to the Commands Manual.

Reference: "Customer Care Center" on page 1-13

8. Enter the following command to restore the database from the removable disk:

chg-db:action=restore

---

9. The database must match the level of the current database or network cards in the system. If it does not, contact Tekelec Technical Services at the appropriate number.

Reference: "Customer Care Center" on page 1-13.

Continue with Step 12.

CAUTION: If a disk restore results in an OAM database level different from that on the network cards, (e.g. LIM, GLS, etc.) all out of sync cards are required to be rebooted.

10. After the card has been reloaded (a message appears to confirm completion of the load), enter the following command to verify the database is consistent (same level as the other cards in the system).

rept-stat-card

---

11. Enter the following command for each OAP terminal inhibited:

chg-trm:trm=x:type=oap

where x is the port number.

---

12. Enter the following command to return the OAP terminals to the in-service state:

alw-trm:trm=x

where x is the port number.

---

13. If the problem persists, call Tekelec Technical Services at the appropriate number.

Reference: “Customer Care Center” on page 1-13

0428 - Backup LNP database corrupted

Description

The LNP audit on an OAM card detects that the backup LNP database on that card is corrupt.

Example

```
     RLGHNCXA21W 00-02-07 11:02:30 EST  EAGLE 35.0.0
*    0100.0428 * CARD  1113 OAM      Backup LNP database corrupted
```

Alarm Level

Minor

Procedure

1. Enter the following command to verify the status of the LNP database:

rept-stat-db

The following is an example of output for a corrupted database.

```
> rept-stat-db

Command Accepted - Processing

    oflnmoxa11w 00-10-08 15:56:40 CDT EAGLE 35.0.0
    rept-stat-db
    Command entered at terminal #4.
;

    oflnmoxa11w 00-10-08 15:56:40 CDT EAGLE 35.0.0
    DATABASE STATUS: >> NOT OK <<
           TDM 1114 ( STDBY)                TDM 1116 ( ACTV )
            C   LEVEL    TIME LAST BACKUP     C   LEVEL    TIME LAST BACKUP
            - -------- --------------------  - -------- --------------------
   FD BKUP  Y   342256 CORRUPT                Y   342256 00-10-07 00:40:29 CDT
   FD CRNT  N   342374                        Y   342375
           MDAL 1117
            - --------
```

2. Enter the following command to retrieve the terminal types and port numbers:

rtrv-trm

3. Enter the following command to inhibit each OAP terminal displayed in the output from Step 2:

inh-trm:trm=x

where *x* is the port number.
NOTE: The force parameter is required for the last OAP terminal inhibited.

---

4. Enter the following command if the problem is with the backup database. This command copies database partitions from the active current to the active backup and the standby current to the standby backup.

chg-db:action=backup

Continue with Step 6.
NOTE: Continue with Step 5 if backup fails.

---

5. Enter the following command to repair the database by copying current and backup databases from the active to the standby fixed disk:

chg-db:action=repair

---

6. The database must match the level of the current and backup databases in the system. If it does not, contact Tekelec Technical Services at the appropriate number.

Reference: “Customer Care Center” on page 1-13.

Continue with Step 7.

---

7. After the card has been reloaded (a message appears to confirm completion of the load), enter the following command to verify the database is consistent (same level as the other cards in the system).

rept-stat-db

---

8. Enter the following command to return the OAP terminals to the in-service state:

rst-trm:trm=x

where x is the port number.

---

9. If the problem persists, call Tekelec Technical Services at the appropriate number.

Reference: “Customer Care Center” on page 1-13

0429 - LNP database is inconsistent

Description

The LNP audit on the standby OAM or one of the SCCP cards detects that the database on that card does not match the database on the active OAM card.

Example

```
     RLGHNCXA21W 00-02-07 11:02:30 EST  EAGLE 35.0.0
*    0100.0429 * CARD  1113 OAM      LNP database is inconsistent
```

Alarm Level

Minor

Procedure for a non-MASP card

1. Enter the following command to verify the status of the LNP database:

rept-stat-db

2. Enter the following command to retrieve the terminal types and port numbers:

rtrv-trm

3. Enter the following command to inhibit each OAP terminal displayed in the output from Step 2:

inh-trm:trm=x

where x is the port number.
NOTE: The force parameter is required for the last OAP terminal inhibited.

4. Enter the following command to correct the SCCP card, if necessary. This command reinitializes the card and forces the card to load the current level of the database:

init-card:loc=xxxx
where *xxxx* is the location of the card identified in output.

5. Enter the following command to verify that the database is the same level as the other cards in the system:

rept-stat-db:display=all

6. Check the consistency of the card by entering the following command:
   rept-stat-db:display=except

---

7. Enter the following command to return the OAP terminals to the in-service state:
   alw-trm:trm=x
   where x is the port number.

---

8. If the problem persists, call Tekelec Technical Services at the appropriate number.
   Reference: “Customer Care Center” on page 1-13

Procedure for a MASP card

1. Enter the following command to retrieve the terminal types and port numbers:

rtrv-trm

2. Enter the following command to inhibit each OAP terminal displayed in the output from Step 1:

inh-trm:trm=x

where x is the port number.
NOTE: The force parameter is required for the last OAP terminal inhibited.

3. Enter the following command for each OAP terminal inhibited in Step 2:

chg-trm:trm=x:type=none

where x is the port number.

4. If the message indicates the active fixed disk is inconsistent, continue with Step 5.
If the message indicates the standby fixed disk is inconsistent, continue with Step 6.
If the message indicates that both fixed disks are inconsistent, continue with Step 7.

5. Enter the following command on the active GPSM-II card to force it to become standby:

init-card:loc=xxxx

where *xxxx* is the card location stenciled on the shelf of the system.
Continue with Step 10.

6. Enter the following command to copy the current and backup database partitions on the active fixed disk, to the current and backup database partitions on the standby fixed disk

chg-db:action=repair

After the command is executed, the standby GPSM-II card reboots, the old database data is purged from memory, and the new database is loaded.
Continue with Step 9.

CAUTION: Contact Tekelec Technical Services at the appropriate number before entering the *chg:db:action=restore* command. For additional information about this command, refer to the Commands Manual.

Reference: "Customer Care Center" on page 1-13.

7. Enter the following command to restore the database from the removable disk:

chg-db:action=restore

---

8. The database must match the level of the current database or network cards in the system. If it does not, contact Tekelec Technical Services at the appropriate number.

Reference: “Customer Care Center” on page 1-13.

Continue with Step 12.

CAUTION: If a disk restore results in an OAM database level different from that on the network cards, (e.g. LIM, GLS, etc.) all out of sync cards are required to be rebooted.

9. After the card has been reloaded (a message appears to confirm completion of the load), enter the following command to verify the database is consistent (same level as the other cards in the system).

rept-stat-card

---

10. Enter the following command for each OAP terminal inhibited in Step 2:

chg-trm:trm=x:type=oap

where x is the port number.

---

11. Enter the following command to return the OAP terminals to the in-service state:

alw-trm:trm=x

where x is the port number.

---

12. For more information on database management, refer to the *Database Administration Manual*.

---

13. If the problem persists, call Tekelec Technical Services at the appropriate number.

Reference: “Customer Care Center” on page 1-13

0430 - Backup LNP database is inconsistent

Description

The LNP audit on the standby OAM or one of the SCCP cards detects that its backup database does not match the database on the active OAM card.

Example

```
     RLGHNCXA21W 00-02-07 11:02:30 EST  EAGLE 35.0.0
 *   0100.0430 * CARD  1113 OAM     Backup LNP database is inconsistent
```

Alarm Level

Minor

Procedure

1. Enter the following command to verify the status of the LNP database:

rept-stat-db

2. Enter the following command to retrieve the terminal types and port numbers:

rtrv-trm

3. Enter the following command to inhibit each OAP terminal displayed in the output from Step 2:

inh-trm:trm=x

where x is the port number.
NOTE: The force parameter is required for the last OAP terminal inhibited.

4. Enter the following command if the problem is with the backup database. This command copies the database partitions from the active fixed disk to the backup partition on the standby disk.

chg-db:action=backup

5. Verify that measurement collection is on or off by entering this command.

rtrv-meas-sched

This is an example of the possible output. If measurement collection is on (*COLLECT = ON*), go to step 6. If measurement collection is off (*COLLECT = OFF*), go to step 7.

```
RLGHNCXA03W 00-09-27 07:19:51 EST  EAGLE 35.0.0
```

```
COLLECT        = on
---------------------
SYSTOT-STP     = on
SYSTOT-TT      = off
SYSTOT-STPLAN  = off
COMP-LNKSET    = on
COMP-LINK      = on
GTWY-STP       = on
GTWY-LNKSET    = on
MTCD-STP       = on
MTCD-LINK      = on
MTCD-STPLAN    = on
MTCD-LNKSET    = on
```

---

6. Enter the following command to turn measurement collection off:

chg-meas:collect=off

This message should appear when this command has successfully completed:

```
RLGHNCXA03W 00-03-18 17:02:57 EST  EAGLE 35.0.0
CHG-MEAS: MASP A - COMPLTD
```

---

7. Enter the following command if the problem is with the standby disk. This command copies a mirror image of the fixed disk to the standby disk.

copy-disk:dloc=xxxx
where *xxxx* is the destination location.

---

8. Enter the following command to verify that the database is the same level as the other cards in the system:

rept-stat-db:display=all

---

9. If measurement collection was turned off in Step 6, turn measurement collection back on with the *chg-meas* command and the *collect=on* parameter. Enter this command, then go to Step 9. If measurement collection was not turned off in Step 6, do not perform this step and go to Step 10.

chg-meas:collect=on

This message should appear when this command has successfully completed:

```
RLGHNCXA03W 00-03-18 17:02:57 EST  EAGLE 35.0.0
CHG-MEAS: MASP A - COMPLTD
```

---

10. Verify that measurement collection is turned on with the *rtrv-meas-sched* command.

This is an example of the possible output.

```
RLGHNCXA03W 00-09-27 07:19:51 EST  EAGLE 35.0.0
COLLECT        = on
---------------------
SYSTOT-STP     = on
SYSTOT-TT      = off
SYSTOT-STPLAN  = off
```

```
COMP-LNKSET    = on
COMP-LINK      = on
GTWY-STP       = on
GTWY-LNKSET    = on
MTCD-STP       = on
MTCD-LINK      = on
MTCD-STPLAN    = on
MTCD-LNKSET    = on
```

11. Enter the following command to return the OAP terminals to the in-service state:

alw-trm:trm=x

where x is the port number.

12. If the problem persists, call Tekelec Technical Services at the appropriate number.

Reference: “Customer Care Center” on page 1-13

0431 - LNP database has been corrected

Description

This message indicates that a problem with the LNP database has been corrected.

Example

```
RLGHNCXA21W 00-02-07 11:02:30 EST  EAGLE 35.0.0
0100.0431    CARD  1113 OAM      LNP database has been corrected
```

Alarm Level

No alarm condition. The message is informational only.

Procedure

1. This message indicates a previous fault has been corrected. No further action is necessary.

0432 - Backup LNP database has been corrected

Description

This message indicates that a problem with the backup LNP database has been corrected.

Example

```
RLGHNCXA21W 00-02-07 11:02:30 EST  EAGLE 35.0.0
0100.0432    CARD  1113 OAM    Backup LNP database has been corrected
```

Alarm Level

No alarm condition. The message is informational only.

Procedure

1. This message indicates a previous fault has been corrected. No further action is necessary.

0434 - LNP Subsystem is removed

Description

The LNP subsystem is not fully equipped. There are no SCCP cards configured with this LNP subsystem.

Example

```
RLGHNCXA21W 00-02-07 12:01:43 EST  EAGLE 35.0.0
0056.0434      LNP SYSTEM      LNP Subsystem  is removed
```

Alarm Level

No alarm condition. The message is informational only.

Procedure

1. Verify the SCCP hardware. Configure the LNP system with SCCP cards.

NOTE: See Appendix A, *Card Removal/Replacement Procedures* **for card replacement procedures.**

0435 - LNP Subsystem is disabled

Description

The LNP subsystem has been manually disabled using the *inh-map-ss* command.

Example

```
     RLGHNCXA21W 00-02-07 12:01:43 EST  EAGLE 35.0.0
*C   0056.0435  *C  LNP SYSTEM      LNP Subsystem  is disabled
```

Alarm Level

Critical

Procedure

1. Enter the following command to verify the status and location of the LNP subsystem cards.

rept-stat-lnp

2. Enter the following command to change the state of the LNP subsystem status to on-line:

ent-ss-appl:appl=lnp:ssn=xx:stat=online
where *xx* is primary subsystem number.

3. Enter the following command to change the state of the LNP subsystem to on-line:
alw-map-ss:ssn=xx
where *xx* is primary subsystem number.

4. Enter the following command to verify the status of the LNP subsystem.

rept-stat-lnp

0436 - LNP ACG node overload

Description

This message indicates that the number of LNP subsystem queries has exceeded the supported level.

Example

```
    station1234 94-03-30 16:28:08 EST EAGLE 35.0.0
**  0056.0436 ** LNP SYSTEM            LNP ACG node overload
```

Alarm Level

Major

Procedure

1. Enter the following command to verify the status, quantity, and capacity of the SCCP cards.

   rept-stat-lnp

2. Refer to the *Database Administration Manual - LNP* to verify that provisioning rules are being followed.

3. If the problem persists, call Tekelec Technical Services at the appropriate number.

   Reference: “Customer Care Center” on page 1-13

0437 - System SCCP TPS Capacity Exceeded

Description

This message indicates the EAGLE 5 ISS has exceeded its TPS (Transactions Per Second) message transport rate. The alarm will not stop until the TPS rate is below its rated TPS for the system for a period of 30 seconds. The alarm is cleared by the UIM #329 “SCCP capacity normal, card(s) abnormal”.

Example

```
      RLGHNCXA21W 00-11-07 11:02:30 EST  EAGLE 35.0.0
*C    0100.0437 *C SYSTEM           System SCCP TPS Capacity Exceeded
```

Alarm Level

Critical

Procedure

1. Use *rept-stat-sccp* to determine the status of the SCCP subsystem. This command also identifies which SCCP cards are OOS-MT. For example, enter:

rept-stat-sccp

Following is an example of the output:

```
eaglestp 00-10-24 20:38:58 EST EAGLE 35.0.0
    SCCP SUBSYSTEM REPORT IS-NR          Ovflw-1       -----
    SCCP Cards Configured= 4 Cards       IS-NR= 4
    System TCP Alarm Threshold =  80% Total capacity
    System Peak SCCP Load =  3000 TPS
    System Total SCCP Capacity =  5000 TPS


    CARD   VERSION     PST        SST         AST      MSU USAGE   CPU USAGE
    ------------------------------------------------------------------------
    1212   021-001-000 IS-NR      ACTIVE      ALMINH       47%         32%
    ------------------------------------------------------------------------
    SCCP Service Average MSU Capacity = 47%     Average CPU Capacity = 32%

    Command Completed.
```

2. The user should evaluate this new traffic level and determine whether additional SCCP cards are required to maintain the TPS level the system is processing.

0438 - Degraded Mode, Invalid OAM HW config

Description

This UAM alarm occurs when the system does not have the required baseline hardware. Baseline hardware required includes TDM-10 or greater. The alarm recurs every minute. Also, the `act_upgrade` command is rejected if alarm is present.

Example

```
      RLGHNCXA21W 02-12-07 12:01:43 EST  EAGLE 35.0.0
 *C   0014.0438 *C SECULOG 1114   Degraded Mode, Invalid OAM HW config
```

Alarm Level

Critical

Procedure

1. Ensure that the EAGLE 5 ISS has the required hardware baseline, that is, the TDM-10 or greater is installed.

0439 - Exiting Degraded Mode

Description

The Degraded Mode due to a invalid OAM hardware configuration has been cleared, and the mode has been exited. The HMUX is restored to its full operating capacity.

Example

```
RLGHNCXA21W 02-12-07 12:01:43 EST  EAGLE 35.0.0
0014.0439    SECULOG 1114   Exiting Degraded Mode
```

Alarm Level

No alarm condition. The message is informational only.

Procedure

1. This message indicates a previous fault has been corrected. No further action is necessary.

0441 - Incorrect MBD - CPU

Description

A card (TSM/DSM) does not have the required hardware configuration for the application, or a TSM is attempting to load in a slot provisioned for SCCP GPLs.

Example

```
   RLGHNCXA21W 00-02-07 11:02:30 EST  EAGLE 35.0.0
** 0100.0441 ** CARD  1108  VSCCP    Incorrect MBD - CPU
               HW VERIFICATION CODE: xxx
```

Alarm Level

Major

Procedure

1. If this message contains the optional line 'HW VERIFICATION CODE: xxx':

- Go to Appendix E, Auto-Inhibit HW Verification Codes, and decode the xxx value in Table E-1. Correct the indicated problem.
- After correcting the problem, the card will be in *out-of-service maintenance disabled state* (OOS-MT-DSBLD). Restore the card back to *in-service normal state* (IS-NR) with the `alw-card` command.

If this message does not contain the optional line 'HW VERIFICATION CODE: xxx', continue with the next step.

2. Verify the hardware. Verify the card(s) (TSM/DSM) have the correct motherboard/daughterboard combination.

3. If necessary, replace the card(s) (TSM/DSM) with the correct combination of motherboard and daughterboard.

NOTE: See Appendix A for card replacement procedures.

0442 - RTDB database capacity is 95% full

Description

This message is displayed for EPAP when a DSM card detects that its daughterboard memory is 95% full.

- OR -

This message is displayed for ELAP when the RTDB is 95% full for the specified number of TNs, LRNs, or NPAs.

Example

```
     RLGHNCXA21W 00-02-07 11:02:30 EST  EAGLE 35.0.0.0
*C   0100.0442 *C CARD 1108  VSCCP   RTDB database capacity is 95% full
```

Alarm Level

Critical

Procedure

1. For ELAP, perform the following:

- Issue the `rtrv-ctrl-feat` command to verify the quantity of TNs, LRNs, or NPAs specified for this system.
- Either reduce the number of TNs, LRNs, or NPAs to the level specified by the output of step 1, or respecify the capacity with the `enable-ctrl-feat` command.

2. For EPAP, perform the following:

- Either reduce the size of the database to match the installed hardware capacities, or obtain and install a larger capacity DSM card.
- Contact the Customer Care Center for assistance in determining the size and capacity of your DSM card.

NOTE: See Appendix A, *Card Removal/Replacement Procedures* **for card replacement procedures.**

0443 - RTDB database corrupted

Description

A RTDB database is corrupt. The calculated checksum did not match the checksum value stored for one or more records.

Example

```
     RLGHNCXA21W 00-02-07 11:02:30 EST  EAGLE 35.0.0
**   0100.0443 ** CARD  1108 VSCCP     RTDB database corrupted
```

Alarm Level

Major

Procedure

1. Enter the following command to verify the status of the RTDB database:

   rept-stat-db:display=all:db=mps

CAUTION: If more than one card is corrupt, perform Steps 2 through 5 for one card at a time to complete this procedure.

2. Enter the following command to verify the status of the corrupt card.

   rept-stat-card:loc=xxxx

   Where *xxxx* is the location of the card identified in the output of UAM 0443.

3. Examine the output from Step 2. Verify that the SST (secondary state of the card) is not `Restrict`.

   If the SST is `Restrict`, do not continue with this procedure. Contact Tekelec Technical Services at the appropriate number.

   Reference: “Customer Care Center” on page 1-13.

4. Enter the following command to correct the VSCCP card. This command reinitializes the card and forces the card to load the current level of the database. Wait for the reload to complete before continuing.

   init-card:loc=xxxx
   Where *xxxx* is the location of the card identified in output of UAM 0443.

5. Enter the following command to verify the that the database is the same level as the other cards in the system:

   rept-stat-db:display=all:db=mps

---

6. If the problem persists, contact Tekelec Technical Services at the appropriate number.

   Reference: “Customer Care Center” on page 1-13.

0444 - RTDB database is inconsistent

Description

One or more DSM card's real time database is not identical to the current real time database on the active EPAP fixed disks.

Example

```
     RLGHNCXA21W 00-02-07 11:02:30 EST  EAGLE 35.0.0
*    0100.0444 * CARD  1108 VSCCP    RTDB database is inconsistent
```

Alarm Level

Minor

Procedure

1. Enter the following command to verify the status of the RTDB database:

rept-stat-db:display=all:db=mps

CAUTION: If more than one card is inconsistent, perform Steps 2 through 5 to completion for one card at a time.

2. Enter the following command to verify the status of the inconsistent card.

rept-stat-card:loc=xxxx

Where *xxxx* is the location of the card identified in the output of UAM 0444.

3. Examine the output from Step 2. Verify that the SST (secondary state of the card) is not `Restrict`.

If the SST is `Restrict`, do not continue with this procedure. Contact Tekelec Technical Services at the appropriate number.

Reference: "Customer Care Center" on page 1-13.

4. Enter the following command to correct the VSCCP card. This command reinitializes the card and forces the card to load the current level of the database. Wait for the reload to complete before continuing.

init-card:loc=xxxx
Where *xxxx* is the location of the card identified in the output of UAM 0444.

5. Enter the following command to verify the that the database is the same level as the other cards in the system:

   rept-stat-db:display=all:db=mps

---

6. If the problem persists, contact Tekelec Technical Services at the appropriate number.

   Reference: “Customer Care Center” on page 1-13.

0445 - RTDB database has been corrected

Description

This message indicates that a problem with the RTDB has been corrected.

Example

```
RLGHNCXA21W 00-02-07 11:02:30 EST  EAGLE 35.0.0
0100.0445    CARD  1108 VSCCP    RTDB database has been corrected
```

Alarm Level

No alarm condition. The message is informational only.

Procedure

1. This message indicates a previous fault has been corrected. No further action is necessary.

0446 - RTDB database capacity is 80% full

Description

This message is displayed for EPAP when a DSM card detects that its daughterboard memory is at least 80% full.

- OR -

This message is displayed for ELAP when the RTDB reaches 80% full for the specified number of TNs, LRNs, or NPAs.

Example

```
      RLGHNCXA21W 00-02-07 11:02:30 EST  EAGLE 35.0.0.0
**    0100.0446  ** CARD 1108 VSCCP RTDB database capacity is 80% full
```

Alarm Level

Major

Procedure

1. For ELAP, perform the following:

- Issue the `rtrv-ctrl-feat` command to verify the quantity of TNs, LRNs, or NPAs specified for this system.
- Either reduce the number of TNs, LRNs, or NPAs to the level specified by the output of step 1, or respecify the capacity with the `enable-ctrl-feat` command.

2. For EPAP, perform the following:

- Either reduce the size of the database to match the installed hardware capacities, or obtain and install a larger capacity DSM card.
- Contact the Customer Care Centerfor assistance in determining the size and capacity of your DSM card.

NOTE: See Appendix A, *Card Removal/Replacement Procedures* **for card replacement procedures.**

0447 - RTDB database capacity alarm cleared

Description

This message indicates that a problem with the RTDB memory has been corrected.

When the TN, LRN or NPA control features are involved, this UAM message indicates either the feature key quantity has been increased or the RTDB database size has been reduced to clear the condition.

Example

```
RLGHNCXA21W 00-02-07 11:02:30 EST  EAGLE 35.0.0
0100.0447    CARD  1108 VSCCP   RTDB database capacity alarm cleared
```

Alarm Level

No alarm condition. The message is informational only.

Procedure

1. This message indicates a previous fault has been corrected. No further action is necessary.

0448 - RTDB database incoherent

Description

This message indicates that the RTDB database download is in-process or that the update failed.

Example

```
      RLGHNCXA21W 00-02-07 11:02:30 EST  EAGLE 35.0.0
 *    0100.0448  *  CARD  1108 VSCCP    RTDB database incoherent
```

Alarm Level

Minor

Procedure

1. If the following is output when the download is complete, no further action is necessary.
   Only continue with the remainder of this if the following is not output.
   `0445 - RTDB database has been corrected`

CAUTION: Continue with the remainder of this procedure only if Step 1 did not compete successfully. If more than one card is incoherent, perform steps 2 through 6 to completion for one card at a time.

2. Enter the following command to verify the status of the RTDB database:

   rept-stat-db:display=all:db=mps

3. Enter the following command to verify the status of the incoherent card.

   rept-stat-card:loc=xxxx

   Where *xxxx* is the location of the card identified in the output of UAM 0448.

4. Examine the output from Step 3. Verify that the SST (secondary state of the card) is not `Restrict`.

   If the SST is `Restrict`, do not continue with this procedure. Contact Tekelec Technical Services at the appropriate number.

   Reference: “Customer Care Center” on page 1-13.

5. Enter the following command to correct the VSCCP card. This command reinitializes the card and forces the card to load the current level of the database. Wait for the reload to complete before continuing.

   init-card:loc=xxxx
   Where *xxxx* is the location of the card identified in the output of UAM 0448.

---

6. Enter the following command to verify the that the database is the same level as the other cards in the system:

   rept-stat-db:display=all:db=mps

---

7. If the problem persists, contact Tekelec Technical Services at the appropriate number.

   Reference: “Customer Care Center” on page 1-13.

0449 - RTDB resynchronization in progress

Description

This message indicates that the MPS database resynchronization is in-process.

Example

```
     RLGHNCXA21W 00-02-07 11:02:30 EST  EAGLE 35.0.0
**   0100.0449  **  CARD  1108 VSCCP   RTDB resynchronization in progress
```

Alarm Level

Major

Procedure

1. When the resynchronization is complete, the following message will appear
   `0445 - RTDB database has been corrected`
   No further action is necessary.

0451 - RTDB reload required

Description

The RTDB database on the DSM card needs to be reloaded because the resynch log does not contain all of the required updates.

Example

```
     RLGHNCXA21W 00-02-07 11:02:30 EST  EAGLE 35.0.0
**   0100.0451 ** CARD  1108 VSCCP    RTDB reload required
```

Alarm Level

Major

Procedure

1. Enter the following command to verify the status of the RTDB:

rept-stat-db:display=all:db=mps

2. Enter the following command to correct the VSCCP card. This command reinitializes the card and forces the card to load the current level of the database:

init-card:loc=xxxx
xxxx is the location of the card identified in the output of UAM 0451.

3. When the reload is complete, the following message will appear
`0445 - RTDB database has been corrected`
No further action is necessary.

4. If the problem persists, contact Tekelec Technical Services at the appropriate number.

Reference: “Customer Care Center” on page 1-13.

0452 - Exceeded Service Error Threshold Lvl 1

Description

This UAM is generated when the EAGLE 5 ISS detects SCCP or Application traffic failure rates greater than the defined level 1 Service Error Threshold.

Example

```
     RLGHNCXA21W 00-11-07 11:02:30 EST  EAGLE 35.0.0
**   0014.0452 ** SCCP SYSTEM       Exceeded Service Error Threshold Lvl 1
```

Alarm Level

Major

Procedure

---

1. Enter the following command to verify the database threshold:

`rtrv-th-alm`

---

2. Enter the following command to verify the Fail Ratio of the service in question:

`rept-stat-sccp`

---

3. Enter the following command to verify all cards are IS-NR:

`rept-stat-db:display=all`

Correct all cards in any state other than IS-NR. Refer to *Appendix A Card Removal/Replacement Procedures*.

---

4. Enter the following command to retrieve records from the active or standby Alarm and UIM logs generated by the Maintenance system:

`rtrv-log:type=xxx`

where: xxx=ALL, ALARM, or UIM

For more information on available parameters, refer to the *Commands Manual.*

---

5. Investigate SCCP, GTT, and Application UIMs and UAMs that relate to the time frame in which the level 1 threshold was reached. Verify the functionality of the Nodes identified in those UIMs or UAMs.

---

6. For further assistance, contact the Customer Care Center at 888-367-8552 (within the continental US) and +1 919-460-2150 (outside the continental US).

0453 - Exceeded Service Error Threshold Lvl 2

Description

This UAM is generated when the EAGLE 5 ISS detects SCCP or Application traffic failure rates greater than the defined level 2 Service Error Threshold.

Example

```
     RLGHNCXA21W 00-11-07 11:02:30 EST  EAGLE 35.0.0
 *C  0014.0453 *C SCCP SYSTEM      Exceeded Service Error Threshold Lvl 2
```

Alarm Level

Critical

Procedure

---

1. Enter the following command to verify the database threshold:

`rtrv-th-alm`

---

2. Enter the following command to verify the Fail Ratio of the service in question:

`rept-stat-sccp`

---

3. Enter the following command to verify all cards are IS-NR:

`rept-stat-db:display=all`

Correct all cards in any state other than IS-NR. Refer to *Appendix A Card Removal/Replacement Procedures*.

---

4. Enter the following command to retrieve records from the active or standby Alarm and UIM logs generated by the Maintenance system:

`rtrv-log:type=xxx`

`where: xxx=ALL, ALARM, or UIM`

For more information on available parameters, refer to the *Commands Manual.*

---

5. Investigate SCCP, GTT, and Application UIMs and UAMs that relate to the time frame in which the level 2 threshold was reached. Verify the functionality of the Nodes identified in those UIMs or UAMs.

---

6. For further assistance, contact the Customer Care Center at 888-367-8552 (within the continental US) and +1 919-460-2150 (outside the continental US).

0454 - Service Error Threshold Alarm Cleared

Description

This message is generated when the Service Error Threshold alarm is cleared.

Example

```
RLGHNCXA21W 00-12-07 12:01:43 EST  EAGLE 35.0.0
0014.0454 SCCP   1205,Service Error Threshold Alarm Cleared
```

Alarm Level

No alarm condition. The message is informational only.

Procedure

1. This message indicates a previous fault has been corrected. No further action is necessary.

0455 - EIR Subsystem is not available

Description

The EIR subsystem is not available. No IS-NR VSCCP cards are associated with this EIR subsystem. No VSCCP cards have an Active EIR status; all are either out-of service (OOS) or loading. The EIR subsystem was not taken off-line via command.

Example

```
     RLGHNCXA21W 03-08-18 12:01:43 EST  EAGLE 35.0.0
*C   0056.0455  *C  EIR SYSTEM    EIR Subsystem is not available
```

Alarm Level

Critical

Procedure

1. Enter the following command to verify the status and location of the subsystem cards.

rept-stat-mps

2. Enter the following command to move the VSCCP cards to an ACTIVE status if loading is successful:

rst-card:loc=xxxx
xxxx is the location of the OOS-MT-DSBLD VSCCP card(s) identified in step 1.

3. Enter the following command to verify the status and location of the subsystem cards.

rept-stat-mps

4. Verify the VSCCP card(s) reset in step 2 are IS-NR. If not, reseat the card(s).

5. If any card(s) remain OOS-MT, replace the card(s).

NOTE: See Appendix A, *Card Removal/Replacement Procedures* **for card replacement procedures.**

0456 - EIR Subsystem is disabled

Description

The EIR subsystem has been manually disabled with the *inh-map-ss* command. All IS-NR (in service normal) cards have EIR status of Offline, with at least one card IS-NR.

Example

```
      RLGHNCXA21W 03-08-18 12:01:43 EST  EAGLE 35.0.0
*C    0056.0456  *C  EIR SYSTEM   EIR Subsystem is disabled
```

Alarm Level

Critical

Procedure

1. Enter the following command to verify the status and location of the EIR subsystem cards.

rept-stat-mps

2. Enter the following command to reserve the subsystem number and to change the state of the EIR subsystem status to on-line:

ent-ss-appl:appl=eir:ssn=xx:stat=online
xx is primary subsystem number.

3. Enter the following command to change the state of the EIR subsystem to on-line:
alw-map-ss:ssn=xx
xx is primary subsystem number.

4. Enter the following command to verify the status of the EIR subsystem.

rept-stat-mps

0457 - EIR Subsystem normal,card(s) abnormal

Description

One or more of the VSCCP cards do not have an Active status.

Example

```
   RLGHNCXA21W 00-02-07 12:01:43 EST  EAGLE 35.0.0
*  0056.0457      EIR SYSTEM   EIR Subsystem normal,card(s) abnormal
```

Alarm Level

Minor

Procedure

1. Enter the following command to verify the status and location of the subsystem cards.

rept-stat-mps

2. Enter the following command to move the VSCCP card to an ACTIVE status if loading is successful:

rst-card:loc=xxxx
xxxx is the location of the OOS-MT-DSBLD VSCCP card(s) identified in step 1.

3. Enter the following command to verify the status and location of the subsystem cards.

rept-stat-mps

4. Verify the VSCCP card(s) reset in step 2 are IS-NR. If not, reseat the card(s).

5. If any card(s) remain OOS-MT, replace the card(s).

NOTE: See Appendix A, *Card Removal/Replacement Procedures* **for card replacement procedures.**

0458 - EIR Subsystem is available

Description

This message indicates that a problem with the EIR subsystem has been corrected. All VSCCP cards are IS-NR and have an EIR status of Active.

Example

```
RLGHNCXA21W 00-02-07 12:01:43 EST  EAGLE 35.0.0
0056.0458     EIR SYSTEM   EIR Subsystem is available
```

Alarm Level

No alarm condition. The message is informational only.

Procedure

1. This message indicates a previous fault has been corrected. No further action is necessary.

0459 - EIR Subsystem is removed

Description

The EIR subsystem is not equipped. No VSCCP cards are configured with the EIR subsystem.

Example

```
RLGHNCXA21W 00-02-07 12:01:43 EST  EAGLE 35.0.0
0056.0459      EIR SYSTEM    EIR Subsystem is removed
```

Alarm Level

No alarm condition. The message is informational only.

Procedure

1. Verify the VSCCP hardware. Configure the EIR system with VSCCP cards.

NOTE: See Appendix A, *Card Removal/Replacement Procedures* **for card replacement procedures.**

0466- STC Network Unavailable

Description

This indicates the network connected to the STC (port A/B) is inaccessible.

Example

```
    RLGHNCXA21W 00-12-07 12:01:43 EST  EAGLE 35.0.0
**  0014.0466 ** CARD 1201 STC  STC Network Unavailable
```

Alarm Level

Major

Procedure

1. Re-association should take place automatically. If it does not, call Tekelec Technical Services at the appropriate number.

   Reference: “Customer Care Center” on page 1-13.

0467- STC Network Available

Description

This indicates the network connected to the STC (port A/B) is now accessible.

Example

```
RLGHNCXA21W 00-12-07 12:01:43 EST  EAGLE 35.0.0
0014.0467    CARD 1201 STC  STC Network Available
```

Alarm Level

No alarm condition. The message is informational only.

Procedure

1. This message indicates a previous fault has been corrected. No further action is necessary.

0468 - All STC Networks Unavailable

Description

All connections off all the STC cards (port A/B) are inaccessible.

Example

```
    RLGHNCXA21W 00-12-07 12:01:43 EST  EAGLE 35.0.0
*C  0014.0468  *C EROUTE System  All STC Networks Unavailable
```

Alarm Level

Critical

Procedure

1. Re-association should take place automatically. If it does not, call Tekelec Technical Services at the appropriate number.

   Reference: “Customer Care Center” on page 1-13.

0469- All STC Cards Unavailable

Description

All the STC cards are not accessible.

Example

```
    RLGHNCXA21W 00-12-07 12:01:43 EST  EAGLE 35.0.0
*C  0014.0469 *C EROUTE System  All STC Cards unavailable
```

Alarm Level

Critical

Procedure

1. Determine if all STC cards are out of service by entering the following command.

   rept-stat-card

2. Reinitialize the STC cards by entering the following command.

   init-card:appl=eroute

3. If the fault has not cleared, reseat each faulty STC card.

4. If the alarm is not cleared, call Tekelec Technical Services at the appropriate number.

   Reference: “Customer Care Center” on page 1-13.

   NOTE: See Appendix A for procedures on replacing cards.

0470 - EROUTE is Removed

Description

All the STC cards have been deleted.

Example

```
RLGHNCXA21W 00-12-07 12:01:43 EST  EAGLE 35.0.0
0014.0470    EROUTE System  EROUTE is Removed
```

Alarm Level

No alarm condition. The message is informational only.

Procedure

1. No action is necessary.

0471- EROUTE System is Available

Description

This message indicates that the EROUTE system is available and fully functional.

Example

```
RLGHNCXA21W 00-12-07 12:01:43 EST  EAGLE 35.0.0
0014.0471    EROUTE System  EROUTE System is Available
```

Alarm Level

No alarm condition. The message is informational only.

Procedure

1. This message indicates a previous fault has been corrected. No further action is necessary.

0472 - EROUTE System Threshold Exceeded

Description

The EROUTE system has reached a rate higher than its threshold of 80% capacity.

Example

```
    RLGHNCXA21W 00-12-07 12:01:43 EST  EAGLE 35.0.0
 *  0014.0472  * EROUTE System  EROUTE System Threshold Exceeded
```

Alarm Level

Minor

Procedure

1. Decrease the number of links being monitored until more STC cards are added to the System.

2. Refer to the *Database Administration Manual - Features* for the correct procedure on adding STC cards.

0473 - EROUTE System Capacity Exceeded

Description

The EROUTE system has reached a rate higher than its capacity. There is the possibility of a loss of traffic monitoring.

Example

```
    RLGHNCXA21W 00-12-07 12:01:43 EST  EAGLE 35.0.0
**  0014.0473 ** EROUTE System  EROUTE System Capacity Exceeded
```

Alarm Level

Major

Procedure

1. Decrease the number of links being monitored until more STC cards are added to the System.

2. Refer to the *Database Administration Manual - Features* for the correct procedure on adding STC cards.

0474 - EROUTE capacity normal, card(s) abnormal

Description

The EROUTE system is operating normally even though one or more card(s) is OOS-MT.

Example

```
RLGHNCXA21W 00-12-07 12:01:43 EST  EAGLE 35.0.0
0014.0474    EROUTE System  EROUTE capacity normal, card(s) abnormal
```

Alarm Level

No alarm condition. The message is informational only.

Procedure

1. Enter the following command to determine which STC cards are out of service.

   rept-stat-eroute

2. Reinitialize each faulty STC card using the following command.

   init-card:loc=xxxx

   Where *xxxx* is the location of each faulty card identified in Step 1.

3. If the fault has not cleared, reseat each faulty card.

0475 - NTP Time Unavailable

Description

The STC cards are not able to get NTP time from the ESP.

Example

```
    RLGHNCXA21W 00-12-07 12:01:43 EST  EAGLE 35.0.0
*   0014.0475  * EROUTE System  NTP Time Unavailable
```

Alarm Level

Minor

Procedure

1. Have the far-end verify the status of the time process.

0476- NTP Time Available

Description

The STC cards are now able to get NTP time from the ESP.

Example

```
RLGHNCXA21W 00-12-07 12:01:43 EST  EAGLE 35.0.0
0014.0476    EROUTE System  NTP Time Available
```

Alarm Level

No alarm condition. The message is informational only.

Procedure

1. This message indicates a previous fault has been corrected. No further action is necessary.

0477 - Congestion: Copy Function De-activated

Description

The Copy Function on the SS7 cards have been de-activated.

Example

```
   RLGHNCXA21W 00-12-07 12:01:43 EST  EAGLE 35.0.0
 *  0014.0477 * SLK 1205,A nc00027  Congestion: Copy Function De-activated
                SLC=03   FECLLI=testclli          CLASS=SAAL
```

Alarm Level

Minor

Procedure

1. Since congestion usually peaks and subsides quickly, a measurements report should be printed to understand what SS7 events took place. Use the command *rept-meas* to obtain a report.

   NOTE: The measurements collection must first be turned on so measurements can be collected. If measurements are not turned on, no report will be available. See Chapter 4, "Measurements," for traffic measurements information.

2. Ensure that there are enough links in the linkset based on the traffic load.

0478 - Copy Function Activated

Description

The congestion has cleared and the copy function on the SS7 cards have been re-activated.

Example

```
RLGHNCXA21W 00-12-07 12:01:43 EST  EAGLE 35.0.0
0014.0478   SLK 1205,A nc00027  Copy Function Activated
              SLC=03   FECLLI=testclli          CLASS=SAAL
```

Alarm Level

No alarm condition. The message is informational only.

Procedure

1. This message indicates a previous fault has been corrected. No further action is necessary.

0479 - Link not Monitored

Description

This is a possible clearing condition for UAM 477, **`Congestion: Copy Function Deactivated`**. This implies that the Sentinel is not monitoring this link any longer so any monitoring alarms should be cleared.

Example

```
RLGHNCXA21W 00-12-07 12:01:43 EST  EAGLE 35.0.0
0014.0479   SLK 1205,A nc00027  Link not Monitored
              SLC=03   FECLLI=testclli          CLASS=SAAL
```

Alarm Level

No alarm condition. The message is informational only.

Procedure

1. This message indicates a previous fault has been corrected. No further action is necessary.

0480 - Timestamp Invalid

Description

This indicates that the LIM card timestamp is invalid.

Example

```
    RLGHNCXA21W 00-12-07 12:01:43 EST  EAGLE 35.0.0
*   0014.0480  * CARD 1201 STC  Timestamp Invalid
```

Alarm Level

Minor

Procedure

1. This alarm should clear automatically. If it does not, call Tekelec Technical Services at the appropriate number.

   Reference: “Customer Care Center” on page 1-13.

0481 - Timestamp Valid

Description

This indicates that the LIM card timestamp is valid.

Example

```
RLGHNCXA21W 00-12-07 12:01:43 EST  EAGLE 35.0.0
0014.0467    CARD 1201 STC  STC Network Available
```

Alarm Level

No alarm condition. The message is informational only.

Procedure

1. This message indicates a previous fault has been corrected. No further action is necessary.

0482 - Card(s) have been denied EROUTE service

Description

EROUTE service is being denied service because there is a shortage of STC cards.

Example

```
    RLGHNCXA21W 00-12-07 12:01:43 EST  EAGLE 35.0.0
**  0014.0482 ** EROUTE System  Card(s) have been denied EROUTE service
```

Alarm Level

Major

Procedure

1. Enter the following command to determine the cards that are denied EROUTE service.

rept-stat-eroute

2. Refer to the *Database Administration Manual - Features* for the correct procedure on adding STC cards.

0500 - Alarm being cleared for this device

Description

This is a generic alarm clearing output that applies to all setting alarms (Critical, Major, or Minor). The alarm for the indicated device is being cleared.

Example

```
tekelecstp 99-01-19 14:56:48 EST  EAGLE 35.0.0
0045.0500   DLK 1104,A1            Alarm being cleared for this device
```

NOTE: The output can vary significantly. The output varies depending on which device the alarm is being cleared. In this example the alarm is being cleared for a Data Link.

Alarm Level

No alarm condition. The message is informational only.

Procedure

1. No further action is necessary.

0514 - Standby MASP inhibited

Description

This message indicates that the standby OAM is inhibited. Database updates will be rejected until the standby OAM is allowed.

Example

```
    RLGHNCXA3W 00-11-06 10:55:49 EST EAGLE 35.0.0
**  0076.0514 ** CARD 1115 OAM     Standby MASP inhibited
```

Alarm Level

Major

Procedure

1. Verify the status of the OAM entering a *rept-stat-card* command.

2. Enter the following command to allow the card:

alw-card:loc=xxxx
where *xxxx* = card location (1115 or 1113)

3. If the card is restored, you have completed this procedure. If the card is not restored, check and follow the output to correct the problem, then enter the *alw-card* command.

4. If the problem persists, call Tekelec Technical Services at the appropriate number.

Reference: “Customer Care Center” on page 1-13

0515 - Standby MASP allowed

Description

This message indicates that the inhibited standby OAM has been restored.

Example

```
RLGHNCXA3W 00-11-06 10:55:49 EST EAGLE 35.0.0
0076.0515  CARD 1115 OAM     Standby MASP allowed
```

Alarm Level

No alarm condition. The message is informational only.

Procedure

1. This message indicates a previous fault has been corrected. No further action is necessary.

0516 - Degraded Mode - 1 card failed

Description

The Measurements Platform subsystem is degraded because one MCPM card is out of service. The Measurements Platform subsystem can successfully complete all of its work, but it has no spare MCPM.

Example

```
     RLGHNCXA21W 00-02-07 11:02:30 EST  EAGLE 35.0.0
 *   0100.0516 * MEAS SYSTEM    Degraded Mode - 1 card failed
```

Alarm Level

Minor

Procedure

1. Enter the following command to determine the status of the MCPM cards.

rept-stat-meas

2. Reinitialize the faulty card using the *init-card* command.

3. If the fault has not cleared, reseat the faulty card.

4. If the fault has not cleared, replace the faulty MCPM card.

NOTE: See Appendix A, *Card Removal/Replacement Procedures* **for card replacement procedures.**

0517 - Degraded Mode - multiple cards failed

Description

The Measurements Platform subsystem is degraded because more than one MCPM card is out of service. The Measurements Platform subsystem can successfully complete all of its work, but may have no spare MCPM.

Example

```
     RLGHNCXA21W 00-02-07 11:02:30 EST  EAGLE 35.0.0
**   0100.0517 ** MEAS SYSTEM    Degraded Mode - multiple cards failed
```

Alarm Level

Major

Procedure

1. Enter the following command to determine the status of the MCPM cards.

rept-stat-meas

2. Reinitialize the faulty card using the *init-card* command.

3. If the fault has not cleared, reseat the faulty card.

4. If the fault has not cleared, replace the faulty MCPM card.

5. Repeat Step 2 through Step 4 for each faulty MCPM card.

NOTE: See Appendix A, *Card Removal/Replacement Procedures* **for card replacement procedures.**

0518 - Measurements subsystem unavailable

Description

The Measurements Platform subsystem is not available. All MCPM cards are out of service.

Example

```
     RLGHNCXA21W 00-02-07 11:02:30 EST  EAGLE 35.0.0
 *C  0100.0518   *C   MEAS SYSTEM    Measurements subsystem unavailable
```

Alarm Level

Critical

Procedure

1. Enter the following command to determine the status of the MCPM cards.

   rept-stat-meas

2. Reinitialize the faulty MCPM card using the *init-card* command.

3. If the fault has not cleared, reseat the faulty card.

4. If the fault has not cleared, replace the faulty MCPM card.

5. Repeat Step 2 through Step 4 for each faulty MCPM card.

   NOTE: See Appendix A for card replacement procedures.

0519 - Measurements subsystem available

Description

This message indicates that the Measurements subsystem has been restored to service.

Example

```
RLGHNCXA3W 00-11-06 10:55:49 EST EAGLE 35.0.0
0076.0519  MEAS SYSTEM     Measurements subsystem available
```

Alarm Level

No alarm condition. The message is informational only.

Procedure

1. This message indicates a previous fault has been corrected. No further action is necessary.

0520 - Frame power usage reached LVL3

Description

Frame power usage reached 98% of threshold value.

Example

```
RLGHNCXA3W 00-11-06 10:55:49 EST EAGLE 35.0.0
*C 0002.0520 *C FRAME CF01 Frame power usage reached LVL3
```

Alarm Level

Critical

Procedure

1. Verify that the Frame Power Threshold value is properly configured for the frame for which UAM is generated using the following command:

   rtrv-frm-pwr

2. Verify that the card population is correct for that particular frame using the following command:

   rtrv-stp:display=power

3. Notify the Customer Care Center about the generated UAM. Reference: “Customer Care Center” on page 1-13.

0521 - Frame power usage reached LVL2

Description

Frame power usage reached 95% but is below 98% of threshold value.

Example

```
RLGHNCXA3W 00-11-06 10:55:49 EST EAGLE 35.0.0
** 0002.0521 ** FRAME CF01 Frame power usage reached LVL2
```

Alarm Level

Major

Procedure

1. Verify that the Frame Power Threshold value is properly configured for the frame for which UAM is generated using the following command:

   rtrv-frm-pwr

2. Verify that the card population is correct for that particular frame using the following command:

   rtrv-stp:display=power

3. Notify the Customer Care Center about the generated UAM. Reference: “Customer Care Center” on page 1-13.

0522 - Frame power usage reached LVL1

Description

Frame power usage reached 90% but is below 95% of threshold value.

Example

```
RLGHNCXA3W 00-11-06 10:55:49 EST EAGLE 35.0.0
* 0002.0522 * FRAME CF01 Frame power usage reached LVL1
```

Alarm Level

Minor

Procedure

1. Verify that the Frame Power Threshold value is properly configured for the frame for which UAM is generated using the following command:

   rtrv-frm-pwr

2. Verify that the card population is correct for that particular frame using the following command:

   rtrv-stp:display=power

3. Notify the Customer Care Center about the generated UAM. Reference: “Customer Care Center” on page 1-13.

0523 - Frame power usage normal

Description

Frame power usage is normal.

Example

```
RLGHNCXA3W 00-11-06 10:55:49 EST EAGLE 35.0.0
0002.0523 FRAME CF01 Frame power usage normal
```

Alarm Level

No alarm condition. The message is informational only.

Procedure

1. No action is necessary.

0524 - REPT-ALMINH: alarm output TIMED inhibit

Description

A device's alarm is Timed inhibited using the *inh-alm* command.

Example

```
RLGHNCXA3W 00-11-06 10:55:49 EST EAGLE 35.0.0
0076.0524 CARD 1115 OAM     REPT-ALMINH: alarm output TIMED inhibit
```

Alarm Level

No alarm condition. The message is informational only.

Procedure

1. No action is necessary.

0525 - Timed alm inh rdy to expire

Description

Timed inhibition on a device is about to expire in the next 12 hours.

Example

```
RLGHNCXA3W 00-11-06 10:55:49 EST EAGLE 35.0.0
0076.0525 CARD 1115 OAM     Timed alm inh rdy to expire
```

Alarm Level

No alarm condition. The message is informational only.

Procedure

1. No action is necessary.

0526 - Service is available

Description

A problem with the specified SCCP service has been corrected. All SCCP cards are IS-NR and have a service status of Active.

Example

```
RLGHNCXA3W 00-11-06 10:55:49 EST EAGLE 34.3.0
0056.0526 GFLEX SERVICE Service is available
```

Alarm Level

No alarm condition. The message is informational only.

Procedure

1. This message indicates a previous fault has been corrected. No further action is necessary.

0527 - Service abnormal

Description

One or more of the cards providing the specified SCCP service do not have a service status of Active.

Example

```
RLGHNCXA3W 00-11-06 10:55:49 EST EAGLE 34.3.0
* 0056.0527 * GFLEX SERVICE Service abnormal
```

Alarm Level

Minor

Procedure

1. Enter the following command to verify the status and location of the SCCP service cards:

   rept-stat-sccp

2. Enter the following command to move the sccp service card to an ACTIVE status if loading is successful:

   rst-card:loc=xxxx

   where: xxxx is the location of the OOS-MT-DSBLD SCCP card(s) identified in Step 1.

3. Enter the following command to verify the status and location of the SCCP service cards.

   rept-stat-sccp

4. Verify the SCCP card(s) reset in Step 2 are IS-NR. If not, reseat the card(s).

5. If any card(s) remain OOS-MT, replace the card(s).

   NOTE: See Appendix A Card Removal/Replacement Procedures for card replacement procedures.

0528 - Service is not available

Description

The specified SCCP service is not available. No IS-NR SCCP cards are associated with this specified SCCP service. No SCCP cards providing the specified service have a service status of Active.

Example

```
RLGHNCXA3W 00-11-06 10:55:49 EST EAGLE 34.3.0
*C 0056.0528 *C GFLEX SERVICE Service is not available
```

Alarm Level

Critical

Procedure

1. Enter the following command to verify the status and location of the SCCP service cards.

   rept-stat-sccp

2. Enter the following command to move the SCCP cards to an ACTIVE status if loading is successful:

   rst-card:loc=xxxx

   where: xxxx is the location of the OOS-MT-DSBLD SCCP card(s) identified in Step 1.

3. Enter the following command to verify the status and location of the SCCP service cards.

   rept-stat-sccp

4. Verify the SCCP card(s) reset in Step 2 are IS-NR. If not, reseat the card(s).

5. If any card(s) remain OOS-MT, replace the card(s).

   NOTE: See Appendix A, Card Removal/Replacement Procedures for card replacement procedures.

0529 - Service is disabled

Description

The specified SCCP service has been manually disabled with the chg-sccp-serv command. All IS-NR cards providing the service have service status of Offline.

Example

```
RLGHNCXA3W 00-11-06 10:55:49 EST EAGLE 34.3.0
*C 0056.0528 *C GFLEX SERVICE Service is disabled
```

Alarm Level

Critical

Procedure

1. Enter the following command to verify the status and location of the SCCP service cards.

   rept-stat-sccp

2. Enter the following command to change the state of the SCCP service status to on-line:

   chg-sccp-serv:serv=xxxx:state=online

   where: xxxx is SCCP service name.

3. Enter the following command to verify the status of the SCCP service cards.

   rept-stat-sccp

0530 - Service is removed

Description

The specified SCCP service is not equipped. No SCCP cards are configured with the service.

Example

```
RLGHNCXA3W 00-11-06 10:55:49 EST EAGLE 34.3.0
0056.0530 GFLEX SERVICE Service is removed
```

Alarm Level

No alarm condition. The message is informational only.

Procedure

1. Verify the SCCP hardware. Configure the specified service with SCCP cards.

   NOTE: See Appendix A, Card Removal/Replacement Procedures for card replacement procedures.

0531 - Insufficient HW Copy Function Inhibited

Description

HIPR cards must be installed in the same shelf as the IPLIMx and IPGWx card if their links are monitored. Therefore, monitoring will be inhibited on links on IPLIMx or IPGWx cards if a HIPR card is not installed in the same shelf. This is accomplished by ignoring an EMP service accept message after a service request is sent when HPIR cards are not installed. In addition, any active EMP TCP connections on an IPLIM or IPGW link is disconnected if both HIPR cards in the same shelf are removed. A new minor link alarm is implemented to report when monitoring on a link has been inhibited in this manner.

Example

```
   RLGHNCXA3W 00-11-06 10:55:49 EST EAGLE 35.0.0
 *0044.0531 *SLK 1201,A lsnabcde Insufficient HW Copy Function Inhibited
```

Alarm Level

Minor

Procedure

1. Replace the HMUX cards in the same shelf as the IPLIMx or IPGWx cards that produced the alarm with HIPR cards. See Appendix A Card Removal/Replacement Procedures.

0532 - RTX is allowed

Description

A previous fault is corrected and the EAGLE 5 ISS system can send traffic to the specified DPC using the exception route set identified by the specified class and criterion.

Example

```
RLGHNCXA3W 00-11-06 10:55:49 EST EAGLE 35.0.0
0044.0532 RTX 001-101-001 RTX is allowed
          ILSN=lsn012345
```

Alarm Level

No alarm condition. The message is informational only.

Procedure

1. No action is necessary.

0533 - RTX is restricted

Description

A transfer-restricted message has been received concerning the exception route set. Possible causes are as follows:

- One or more routes in this exception route set are unavailable.
- A low priority route is carrying the traffic. The primary and combined routes are not available for traffic in this exception route set.

Example

```
RLGHNCXA3W 00-11-06 10:55:49 EST EAGLE 35.0.0
* 0044.0533 * RTX 001-101-001 RTX is restricted
             ILSN=lsn012345
```

Alarm Level

Minor

Procedure

1. Enter the following command using the DPC and RTX exception class specified in the output message to determine which linkset has a problem:

rept-stat-rtx:dpc=aaaa=xxx-xxx-xxx:cccc=zzzz

where *aaaa = dpc/dpca, dpci, dpcn, or dpcn24*
xxx-xxx-xxx = the specified destination point code
cccc = opc/opca, opci, opcn, opcn24, ilsn, cic, or si
zzzz = the specified value of the above exception class, that establishes the exception routing criterion

2. Enter the following command using the linkset name specified from the output of Step 1 to determine which link(s) could have a problem:

rept-stat-ls

3. Use local procedures to test the link facilities.

0534 - RTX is prohibited

Description

Traffic to the DPC through this exception route set is prohibited. Possible causes are as follows:

- All routes in this exception route set are unavailable.
- Adjacent point code link failures or nonadjacent failure exist in the route.

Example

```
RLGHNCXA3W 00-11-06 10:55:49 EST EAGLE 35.0.0
*C 0044.0534 *C RTX 001-101-001 RTX is prohibited
               ILSN=lsn012345
```

Alarm Level

Critical

Procedure

1. Enter the following command using the DPC and RTX class/criterion specified from the output message to determine which linkset has a problem:

   rept-stat-rtx:dpc=<dpc>:<class>=<criterion>

2. Enter the following command using the linkset name specified from the output of Step 1 to determine which link(s) could have a problem:

   rept-stat-ls

3. Use local procedures to test the link facilities.

0535 - IP Connection Restricted

Description

The following two scenarios exist:

- The SCTP association is established and the SCTP far-end is muti-homed and the Eagle determines one or more far-end IP destinations for the association are unreachable.
- The SCTP association is established and the SCTP far-end is uni-homed and the SCTP near_end has an LHOST and an ALHOST configured.

Example

```
      RLGHNCXA21W 00-12-07 12:01:43 EST  EAGLE 31.3.0
 *    0014.0535  *  IP7 assoc1        IP Connection Resticted
```

Alarm Level

Minor

Procedure

1. Determine why the other end is unreachable (i.e.,is a cable pulled?). All connections at the far end need to be reachable. Once they are the alarm will clear – IP Connection Available.

2. Reconfigure the association to be either both ends uni-homed or both ends multi-homed and make sure all connections are reachable.

0901 - Card DB load timeout, check GLS card

Description

This message indicates that the database of a card has been in a transition for 9 minutes. The database gets put into transition when it waits for updates. In this case the updates are from the GLS card.

Example

```
    RLGHNCXA3W 99-12-06 10:55:49 EST EAGLE 35.0.0
**  0076.0901 ** CARD 1201 SS7ANSI   Card DB load timeout, check GLS card
```

Alarm Level

Major

Procedure

1. The GLS card should not take this long. Make sure that the GLS card is IS-NR by doing a *rept-stat-card* command.

2. Enter the following command to boot the GLS card:

   init-card:appl=gls

3. If the problem persists, call Tekelec Technical Services at the appropriate number.

   Reference: “Customer Care Center” on page 1-13

0902 - Card DB is stable

Description

This message indicates that the database of a card was in transition but has recovered.

Example

```
RLGHNCXA3W 99-12-06 10:56:18 EST EAGLE 35.0.0
0104.0902    CARD 1201 SS7ANSI     Card DB is stable
```

Alarm Level

No alarm condition. The message is informational only.

Procedure

1. No action is needed.

0903 - IP Link A is down

Description

This message indicates that an IP application socket is out of service due to a IP link down (ethernet problem) or due to the signaling link being deactivated.

Example

```
   RLGHNCXA03W 01-01-10 16:28:08 EST EAGLE 35.0.0
** 0046.0903  ** CARD 1111  EBDADCM   IP Link A is down
```

Alarm Level

Major

Procedure

1. Enter the following command to determine the IP address of the link:

   *rtrv-ip-lnk:loc=*xxxx*:port=a*

   Where xxxx is the card identified in the alarm output.

2. Enter the following command to retrieve the name of the local host:

   *rtrv-ip-host:ipadr=*xxxx.xxxx.xxxx.xxxx

   Where xxxx.xxxx.xxxx.xxxx = the link IP address from Step 1.

3. Enter the following command to get the name of the remote host:

   *rtrv-appl-sock:lhost=*xxxxxxxx

   Where xxxxxxxx = local host name from Step 2.

4. Enter the following command to test the TCP/IP connection:

   *pass:loc=*xxxx*:cmd="ping* yyyyyyyyyy*"*

   Where: xxxx = Card location from the alarm output.
   yyyyyyyyyy = logical name of the remote host from Step 3.

5. If the *ping* command fails, perform the following checks:

- Check the remote host hardware and software.
- Use your company procedures to check the network.
- Check cable connections at the remote host.

---

6. If the UNAVAIL REASON still indicates an alignment problem, enter the following command:

*rept-stat-slk:loc=*xxxx*:port=a*

Where xxxx is the card identified in the alarm output.
If the DCM card is not OOS-MT, proceed to Step 8.

---

7. If the DCM card is OOS-MT, do the following, using the *rept-stat-card* command to check for card IS-NR state after each action:

a. Reinitialize card using the *init-card* command

b. Reseat the card

c. Replace the card

NOTE: See Appendix A for procedures on replacing cards.

---

8. If the fault is not cleared, contact Tekelec Technical Services at the appropriate number.

Reference: “Customer Care Center” on page 1-13.

0904 - IP Link A is up

Description

This indicates that a previously broken link between the DCM card and the OAP now exists and is functioning properly.

Example

```
RLGHNCXA03W 01-01-10 16:28:08 EST EAGLE 35.0.0
0046.0904   CARD 1111  EBDADCM   IP Link A is up
```

Alarm Level

No alarm condition. The message is informational only.

Procedure

1. This message indicates a previous fault has been corrected. No further action is necessary.

0905 - IP Link B is down

Description

This message indicates that an IP application socket is out of service due to a IP link down (ethernet problem) or due to the signaling link being deactivated.

Example

```
   RLGHNCXA03W 01-01-10 16:28:08 EST EAGLE 35.0.0
** 0046.0905  ** CARD 1111  EBDADCM   IP Link B is down
```

Alarm Level

Major

Procedure

1. Enter the following command to determine the IP address of the link:

*rtrv-ip-lnk:loc=*xxxx*:port=b*

Where xxxx is the card identified in the alarm output.

2. Enter the following command to retrieve the name of the local host:

*rtrv-ip-host:ipadr=*xxxx.xxxx.xxxx.xxxx

Where xxxx.xxxx.xxxx.xxxx = the link IP address from Step 1.

3. Enter the following command to get the name of the remote host:

*rtrv-appl-sock:lhost=*xxxxxxxx

Where xxxxxxxx = local host name from Step 2.

4. Enter the following command to test the TCP/IP connection:

*pass:loc=*xxxx*:cmd="ping* yyyyyyyyyy*"*

Where: xxxx = Card location from the alarm output.
yyyyyyyyyy = logical name of the remote host from Step 3.

5. If the *ping* command fails, perform the following checks:

- Check the remote host hardware and software.
- Use your company procedures to check the network.
- Check cable connections at the remote host.

---

6. If the UNAVAIL REASON still indicates an alignment problem, enter the following command:

*rept-stat-slk:loc=*xxxx*:port=b*

Where xxxx is the card identified in the alarm output.
If the DCM card is not OOS-MT, proceed to Step 8.

---

7. If the DCM card is OOS-MT, do the following, using the *rept-stat-card* command to check for card IS-NR state after each action:

a. Reinitialize card using the *init-card* command

b. Reseat the card

c. Replace the card

NOTE: See Appendix A for procedures on replacing cards.

---

8. If the fault is not cleared, contact Tekelec Technical Services at the appropriate number.

Reference: “Customer Care Center” on page 1-13.

0906 - IP Link B is up

Description

This indicates that a previously broken link between the DCM card and the OAP now exists and is functioning properly.

Example

```
RLGHNCXA03W 01-01-10 16:28:08 EST EAGLE 35.0.0
0046.0906   CARD 1111  EBDADCM   IP Link B is up
```

Alarm Level

No alarm condition. The message is informational only.

Procedure

1. This message indicates a previous fault has been corrected. No further action is necessary.

0907 - HW limiting TPS rate alarm cleared

Description

This message indicates that the alarm condition, specified by message “0908 - HW cannot support purchased TPS rate,” has been cleared.

Example

```
RLGHNCXA21W 00-02-07 12:01:43 EST  EAGLE 5.0.0-32.0.0
0100.0907    CARD 1101 SS7IPGW   HW limiting TPS rate alarm cleared
                ASSY SN:  102199815a1234
```

Alarm Level

No alarm condition. The message is informational only.

Procedure

1. This message indicates a previous fault has been corrected. No further action is necessary.

0908 - HW cannot support purchased TPS rate

Description

This message indicates that the purchased transactions per second (TPS) rate running on the DCM(s) is higher than can be supported by you current hardware.

Example

```
    RLGHNCXA21W 00-02-07 12:01:43 EST  EAGLE 5.0.0-32.0.0
**  0100.0908 ** CARD 1101 SS7IPGW  HW cannot support purchased TPS rate
                  ASSY SN:  102199815a1234
```

Alarm Level

Major

Procedure

1. Upgrade your DCM hardware. This alarm can be cleared only when the concerned DCM hardware is unplugged.

2. Contact contact Tekelec Technical Services at the appropriate number for information about upgrading your DCM hardware.

   Reference: “Customer Care Center” on page 1-13.

0911 - Dynamic database is inconsistent

Description

The dynamic database audit has detected that checksums are inconsistent. This means that one or more cards do not concur with the current network configuration.

Example

```
     RLGHNCXA21W 00-02-07 11:02:30 EST  EAGLE 35.0.0
**   0100.0911 ** SYSTEM       Dynamic database is inconsistent
```

Alarm Level

Major

Procedure

1. The EAGLE 5 ISS cannot automatically determine which cards are inconsistent. Contact Tekelec Technical Services at the appropriate number.

Reference: “Customer Care Center” on page 1-13.

0912 - Dynamic database is now consistent

Description

The dynamic database audit has run and determined that the checksums are consistent.

Example

```
RLGHNCXA21W 00-02-07 11:02:30 EST  EAGLE 35.0.0
0100.0912  SYSTEM       Dynamic database is now consistent
```

Alarm Level

No alarm condition. The message is informational only.

Procedure

1. This message indicates a previous fault has been corrected. No further action is necessary.

1000 - MTP rcvd UPU - user part is not SCCP

Description

The system forwarded a unit data (UDT) message to a distant node that does not support SCCP. In response, the distant node sent back a user part unavailable (UPU) message.

The message provides the affected point code (which sent the UPU), as well as the service information octet (SIO) field of the message and the cause code.

All fields are in decimal values. The SIO field values applicable to this message are:

03 – SCCP

04 – Telephone User Part (TUP)

05 – ISDN User Part (ISUP)

06 – Data User Part (call and circuit related messages)

07 – Data User Part (facility registration and cancellation)

08 – MTP Testing User Part

The message also provides the value for the User Part that was unavailable (UPU=). The values shown above apply to this field as well.

The Cause Codes (Unavail Cause =) applicable to this message are:

000 – Unknown

001 – Unequipped Remote User

002 – Inaccessible User Part

Unequipped remote user indicates the distant node is not equipped for SCCP. Inaccessible user part indicates that the distant node is equipped with SCCP capability, but there has been a failure in SCCP making it impossible to handle messages sent to it by MTP.

Example

```
RLGHNCXA21W 00-02-07 11:02:30 EST  EAGLE 35.0.0
0100.1000    CARD 1201,A  INFO   MTP rcvd UPU - user part is not SCCP
             SIO=03   OPC=   003-232-000 DPC=   001-004-000
             AFTPC=004-000-001  UPU=03  UNAVAIL CAUSE=001
             LSN=A1234567
```

Alarm Level

No alarm condition. The message is informational only.

Procedure

1. No action necessary.

1001 - MTP rcvd Transfer Controlled (TFC)

Description

The system is generating traffic for a remote node that is congested. The distant node sent a transfer controlled (TFC) message in response.

Example

```
RLGHNCXA21W 00-02-07 11:02:30 EST  EAGLE 35.0.0
0100.1001    CARD 1201,A  INFO   MTP rcvd Transfer Controlled (TFC)
             SIO=0a   OPC=   003-232-000 DPC=   000-000-000
             AFTPC=004-000-000  CONG STATUS=000
            LSN=A1234567
```

Legend

AFTPC	Affected point code
CONG STATUS	Congestion status
DPC	Destination point code
LSN	Linkset name
OPC	Origination point code
SIO	Service information octet

Alarm Level

No alarm condition. The message is informational only.

Procedure

1. The affected point code field of the output message identifies the node that is congested. The system discards MSUs with a priority lower than the congestion status value sent with the TFC.

2. The system sends only messages with a priority higher or equal to the congestion status value of the TFC. Refer to TR-NPT-000246, Issue 2, June 1987, Chapter 1.111.5, Annex A for priority assignments.

3. Contact the far-end to determine the reason for congestion.

1002 - MTP rcvd invalid TFC - status 0

Description

The EAGLE 5 ISS system received a transfer controlled (TFC) message with a status of 0 (protocol violation). No action on the part of the EAGLE 5 ISS system has been taken.

Example

```
RLGHNCXA21W 00-02-07 11:02:30 EST  EAGLE 35.0.0
0100.1002    CARD 1205,B  INFO   MTP rcvd invalid TFC - status 0
             SIO=0a   OPC=   003-234-000  DPC=   000-024-000
             AFTPC=055-000-046  CONG STATUS=000
             LSN=A1234567
```

Legend

AFTPC	Affected point code
CONG STATUS	Congestion status
DPC	Destination point code
LSN	Linkset name
OPC	Origination point code
SIO	Service information octet

Alarm Level

No alarm condition. The message is informational only.

Procedure

1. The EAGLE 5 ISS system does not take any action based on this TFC message. The output above is provided only to indicate the event took place, but does not require any action by maintenance personnel.

2. Contact the far-end to determine the reason for congestion.

1003 - MTP rcvd invalid H0/H1 code

Description

SS7 received a level 3 message with an unrecognized H0H1 code.

Example

```
RLGHNCXA21W 00-02-07 11:02:30 EST  EAGLE 35.0.0
0100.1003    CARD 1205,B  INFO   MTP rcvd invalid H0/H1 code
             SIO=0a   OPC=   003-235-000 DPC=   000-024-000
             H0H1=43
             LSN=A1234567
```

Legend

DPC	Destination point code
H0H1	H0/H1 heading code
LSN	Linkset name
OPC	Origination point code
SIO	Service information octet

Alarm Level

No alarm condition. The message is informational only.

Procedure

1. This message could indicate that the MTP restart feature is not enabled. If the MTP restart feature should be enabled, use the *chg-feat* to turn on the MTP restart feature.

NOTE: Once the feature is enabled using the *chg-feat* command, it can not be turned off. Contact Tekelec Technical Services at the appropriate number before executing the *chg-feat* command.
Reference: "Customer Care Center" on page 1-13.

2. This output is informational only. The SS7 traffic is not interrupted and service is not affected.

3. Contact the far-end to determine the reason for congestion.

1004 - MTP rcvd unknown DPC

Description

The EAGLE 5 ISS system received an MSU with a DPC that is not in the routing table.

Example

```
RLGHNCXA21W 00-02-07 11:02:30 EST  EAGLE 35.0.0
0100.1004    CARD 1205,B  INFO   MTP rcvd unknown DPC
             SIO=0a   OPC=   003-236-000 DPC=   000-071-000
             LSN=A1234567
```

Legend

DPC	Destination point code
LSN	Linkset name
OPC	Origination point code
SIO	Service information octet

Alarm Level

No alarm condition. The message is informational only.

Procedure

1. If the EAGLE 5 ISS system should be able to route to the DPC (indicated in the message output), add the DPC to the EAGLE 5 ISS system routing table using the *ent-rte* and *ent-dstn* commands.

2. If the DPC is not one that the EAGLE 5 ISS system should be able to route to, no action is necessary.

1005 - GWS rcvd OPC that is not allowed

Description

This message indicates the EAGLE 5 ISS received an MSU with an origination point code (OPC) that is not allowed in gateway screening (GWS).

Example

```
RLGHNCXA21W 00-02-07 11:02:30 EST  EAGLE 35.0.0
0100.1005    CARD 1205,A  INFO   GWS rcvd OPC that is not allowed
             SIO=b2   OPC= s-003-237-000  DPC= s-003-003-003
             H0H1=32  AFTPC=03-03-03
             SR=osp3   LSN=A1234567
```

NOTE: Four outputs are possible. The Legend includes abbreviations found in all variations.

Legend

ADDR	Address
AFTPC	Affected point code (for SCCP messages)
AFTSS	Affected subsystem (identifies the subsystem that failed)
AI	Address Indicator
CDPA	Called party address
CGPA	Calling party address
DATA	Information from the upper layers of SCCP management
DPC	Destination point code
H0H1	H0/H1 heading code
LSN	Linkset name
MULT	SCCP management message multiplicity indicator
OPC	Origination point code
PC	Point code
SCCP MT	SCCP message type
SCMG	SCCP management message
SIO	Service information octet
SR	Screening reference name
SSN	Subsystem number
TT	Translation type
TYPE	SCCP management message type

Alarm Level

No alarm condition. The message is informational only.

Procedure

1. If this origination point code (OPC) is one that should be allowed to pass through the network, add the OPC to the gateway screening (GWS) tables assigned to the link reporting this message. Use the *ent-scr-opc* command to add the OPC to the list of allowed OPC codes. Refer to the *Database Administration Manual - Gateway Screening* for instructions on how to add an OPC to gateway screening (GWS).

2. If the OPC should not be allowed to pass through the network, no action is necessary.

1006 - GWS rcvd DPC that is not allowed

Description

This message indicates the EAGLE 5 ISS received an MSU with a destination point code (DPC) that is not allowed in gateway screening (GWS).

Example

```
RLGHNCXA21W 00-02-07 11:02:30 EST  EAGLE 35.0.0
0100.1006    CARD 1205,A  INFO   GWS rcvd DPC that is not allowed
             SIO=b2   OPC= s-003-237-000  DPC= s-003-003-003
             H0H1=23  AFTPC=03-03-03
             SR=osp3   LSN=A1234567
```

NOTE: Four outputs are possible. The Legend includes abbreviations found in all variations.

Legend

ADDR	Address
AFTPC	Affected point code (for SCCP messages)
AFTSS	Affected subsystem (identifies the subsystem that failed)
AI	Address Indicator
CDPA	Called party address
CGPA	Calling party address
DATA	Information from the upper layers of SCCP management
DPC	Destination point code
H0H1	H0/H1 heading code
LSN	Linkset name
MULT	SCCP management message multiplicity indicator
OPC	Origination point code
PC	Point code
SCCP MT	SCCP message type
SCMG	SCCP management message
SIO	Service information octet
SR	Screening reference name
SSN	Subsystem number
TT	Translation type
TYPE	SCCP management message type

Alarm Level

No alarm condition. The message is informational only.

Procedure

1. If this destination point code (DPC) is one that should be allowed to pass through the network, add the DPC to the gateway screening (GWS) tables assigned to the link reporting this message. Use the *ent-scr-dpc* command to add the DPC to the list of allowed DPC codes. Refer to the *Database Administration Manual- Gateway Screening* for instructions on adding a DPC to gateway screening (GWS).

2. If the DPC should not be allowed to pass through the network, no action is necessary.

1007 - GWS rcvd OPC that is blocked

Description

This message indicates the EAGLE 5 ISS received an MSU from an origination point code (OPC) that is blocked from this network by gateway screening (GWS).

Example

```
RLGHNCXA21W 00-02-07 11:02:30 EST  EAGLE 35.0.0
0100.1007    CARD 1205,A  INFO   GWS rcvd OPC that is blocked
             SIO=93   OPC= s-001-001-004  DPC= s-003-003-003
             H0H1=31  AFTPC=03-03-03
             SR=osp3   LSN=A1234567
```

NOTE: Four outputs are possible. The Legend includes abbreviations found in all variations.

Legend

ADDR	Address
AFTPC	Affected point code (for SCCP messages)
AFTSS	Affected subsystem (identifies the subsystem that failed)
AI	Address Indicator
CDPA	Called party address
CGPA	Calling party address
DATA	Information from the upper layers of SCCP management
DPC	Destination point code
H0H1	H0/H1 heading code
LSN	Linkset name
MULT	SCCP management message multiplicity indicator
OPC	Origination point code
PC	Point code
SCCP MT	SCCP message type
SCMG	SCCP management message
SIO	Service information octet
SR	Screening reference name
SSN	Subsystem number
TT	Translation type
TYPE	SCCP management message type

Alarm Level

No alarm condition. The message is informational only.

Procedure

1. If this origination point code (OPC) should be allowed to send messages through the network, use the command *dlt-scr-blkopc* to delete the OPC from the blocked OPC screen set assigned to this link.

2. If this OPC should be blocked from entering this network, no further action is necessary.

1008 - GWS rcvd DPC that is blocked

Description

This message indicates the EAGLE 5 ISS received an MSU from a destination point code (DPC) that is blocked from this network by gateway screening (GWS).

Example

```
RLGHNCXA21W 00-02-07 11:02:30 EST  EAGLE 35.0.0
0100.1008    CARD 1205,A  INFO   GWS rcvd DPC that is blocked
             SIO=b2   OPC= s-007-008-000  DPC= s-003-003-003
             H0H1=32  AFTPC=03-03-03
             SR=osp3   LSN=A1234567
```

NOTE: Four outputs are possible. The Legend includes abbreviations found in all variations.

Legend

ADDR	Address
AFTPC	Affected point code (for SCCP messages)
AFTSS	Affected subsystem (identifies the subsystem that failed)
AI	Address Indicator
CDPA	Called party address
CGPA	Calling party address
DATA	Information from the upper layers of SCCP management
DPC	Destination point code
H0H1	H0/H1 heading code
LSN	Linkset name
MULT	SCCP management message multiplicity indicator
OPC	Origination point code
PC	Point code
SCCP MT	SCCP message type
SCMG	SCCP management message
SIO	Service information octet
SR	Screening reference name
SSN	Subsystem number
TT	Translation type
TYPE	SCCP management message type

Alarm Level

No alarm condition. The message is informational only.

Procedure

1. If this destination point code (DPC) should be allowed to send messages through the network, use the command *dlt-scr-blkdpc* to delete the DPC from the blocked DPC screen set assigned to this link.

2. If this DPC should be blocked from entering this network, no further action is necessary.

1009 - GWS rcvd SIO that is not allowed

Description

This message indicates that gateway screening (GWS) has discarded an MSU that is not allowed in the network.

Example

```
RLGHNCXA21W 00-02-07 11:02:30 EST  EAGLE 35.0.0
0100.1009    CARD 1205,B  INFO   GWS rcvd SIO that is not allowed
             SIO=b2   OPC= s-003-237-000  DPC= s-003-003-003
             H0H1=33  AFTPC=03-03-03
             SR=osp3   LSN=A1234567
```

NOTE: Four outputs are possible. The Legend includes abbreviations found in all variations.

Legend

ADDR	Address
AFTPC	Affected point code (for SCCP messages)
AFTSS	Affected subsystem (identifies the subsystem that failed)
AI	Address Indicator
CDPA	Called party address
CGPA	Calling party address
DATA	Information from the upper layers of SCCP management
DPC	Destination point code
H0H1	H0/H1 heading code
LSN	Linkset name
MULT	SCCP management message multiplicity indicator
OPC	Origination point code
PC	Point code
SCCP MT	SCCP message type
SCMG	SCCP management message
SIO	Service information octet
SR	Screening reference name
SSN	Subsystem number
TT	Translation type
TYPE	SCCP management message type

Alarm Level

No alarm condition. The message is informational only.

Procedure

1. This indicates that a MSU was discarded because it failed screening. No action is necessary, unless the MSU should have passed. If the MSU should have passed (verified by the fields displayed in the above message), go to Step 2.

2. Using the *rtrv-scr-sio* command, verify that the screening reference specified in the above message does not allow MSUs with the *SI/H0/H1* values indicated.

3. If the MSU should have passed screening, use the *ent-scr-sio* command to add the *si* data to the screening reference assigned to this link.

1010 - GWS rcvd a priority that is not allowed

Description

This message indicates gateway screening (GWS) has discarded an MSU because the priority is listed as one that is not allowed in this network.

Example

```
RLGHNCXA21W 00-02-07 11:02:30 EST  EAGLE 35.0.0
0100.1010    CARD 1205,A  INFO   GWS rcvd a priority that is not allowed
             SIO=0a   OPC= s-003-242-000  DPC= s-000-071-000
             H0H1=54  AFTPC=03-03-03
             SR=osp3   LSN=A1234567
```

NOTE: Four outputs are possible. The Legend includes abbreviations found in all variations.

Legend

ADDR	Address
AFTPC	Affected point code (for SCCP messages)
AFTSS	Affected subsystem (identifies the subsystem that failed)
AI	Address Indicator
CDPA	Called party address
CGPA	Calling party address
DATA	Information from the upper layers of SCCP management
DPC	Destination point code
H0H1	H0/H1 heading code
LSN	Linkset name
MULT	SCCP management message multiplicity indicator
OPC	Origination point code
PC	Point code
SCCP MT	SCCP message type
SCMG	SCCP management message
SIO	Service information octet
SR	Screening reference name
SSN	Subsystem number
TT	Translation type
TYPE	SCCP management message type

Alarm Level

No alarm condition. The message is informational only.

Procedure

1. This indicates that a MSU was discarded because it failed screening. No action is necessary, unless the MSU should have passed. If the MSU should have passed (verified by the fields displayed in the above message), go to Step 2.

2. Using the *rtrv-scr-sio* command, verify that the screening reference specified in the above message does not allow MSUs with the priority value indicated.

3. If the MSU should have passed screening, use the *chg-scr-sio* command to add the *pri* data to the screening reference.

1011 - GWS rcvd TFC, AFTPC not in routing tbl

Description

This indicates that a transfer controlled message was received by a gateway link and failed screening because of an affected point code value in the message.

Example

```
RLGHNCXA21W 00-02-07 11:02:30 EST  EAGLE 35.0.0
0100.1011    CARD 1105,B  INFO   GWS rcvd TFC, AFTPC not in routing tbl
             SIO=0a   OPC= s-003-243-000  DPC= s-000-024-000
             H0H1=35   AFTPC=099-099-003
             SR=osp3    LSN=A1234567
```

Legend

AFTPC	Affected point code (for SCCP messages)
DPC	Destination point code
H0H1	H0/H1 heading code
LSN	Linkset name
OPC	Origination point code
SIO	Service information octet
SR	Screening reference name

Alarm Level

No alarm condition. The message is informational only.

Procedure

1. Verify the affected point code in the message, and verify whether the affected point code is required to be in the EAGLE 5 ISS routing tables.

2. If the affected point code is not required to be in the EAGLE 5 ISS routing tables, no further action is necessary.

3. If the affected point code is required to be in the EAGLE 5 ISS routing table, use the *ent-dstn* command to add the affected point code to the EAGLE 5 ISS routing tables.

1012 - GWS rcvd Clg Party that is not allowed

Description

This indicates an MSU was received on a gateway link but failed screening because of the SCCP calling party address.

Example 1 (non-SCMG)

```
RLGHNCXA21W 00-04-18 18:59:23 EST  EAGLE 35.0.0
0101.1012    CARD 1205,B1  INFO   GWS rcvd Clg Party that is not allowed
             SIO=0a   OPC= s-003-244-000  DPC= s-000-071-000
             SCCP MT=  18
             CDPA:  AI=10  PC= s-003-003-003  SSN=005  TT=250
                    ADDR=ABCDEF1234567890ABCDE
             CGPA:  AI=10  PC= s-004-004-004  SSN=005  TT=251
                    ADDR=ABCDEF1234567890ABCDE
             SR=scrb     LSN=A1234567
```

Example 2 (SCMG)

```
RLGHNCXA21W 00-04-18 18:59:30 EST  EAGLE 35.0.0
0102.1012    CARD 1205,B1  INFO   GWS rcvd Clg Party that is not allowed
             SIO=03  OPC= s-003-245-000  DPC= s-001-004-000
             SCMG:    TYPE=000  AFTPC=003-003-003
                      MULT=000  AFTSS=005
             SR=scrb  LSN=A1234567
```

Legend

ADDR	Address
AFTPC	Affected point code (for SCCP messages)
AFTSS	Affected subsystem (identifies the subsystem that failed)
AI	Address Indicator
CDPA	Called party address
CGPA	Calling party address
DPC	Destination point code
LSN	Linkset name
MULT	SCCP managenent message multiplicity indicator
OPC	Origination point code
PC	Point code
SCCP MT	SCCP message type
SCMG	SCCP management message
SIO	Service information octet
SR	Screening reference name
SSN	Subsystem number
TT	Translation type
TYPE	SCCP management message type

Alarm Level

No alarm condition. The message is informational only.

Procedure

1. This output indicates that a SCCP message was discarded because it failed screening. No action is necessary, unless the message should have passed. If the message should have passed (verified by the fields displayed in the above message), continue with Step 2.

2. Using the *rtrv-scr-cgpa* command, verify that the screen name specified in the output does not allow SCCP messages. Check the following fields in the output:

   - For non-SCMG messages, check the SCCP MT, SSN, and OPC
   - For SCMG messages, check the TYPE, AFTSS, and AFTPC (or OPC if the AFTPC is not present)

3. If the SCCP message should have passed screening, use the *ent-scr-cgpa* or *chg-scr-cgpa* command to add the appropriate information to the screening reference.

1013 - GWS rcvd Cld Party that is not allowed

Description

This indicates an MSU was received on a gateway link but failed screening because of the called party value in the SCCP called party address field.

Example

```
RLGHNCXA21W 00-04-18 18:59:30 EST  EAGLE 35.0.0
0102.1013    CARD 1205,B  INFO   GWS rcvd Cld Party that is not allowed
             SIO=03  OPC= s-003-245-000  DPC= s-001-004-000
             SCMG:    TYPE=000  AFTPC=003-003-003
                      MULT=000  AFTSS=005
             SR=scrb  LSN=A1234567
```

Legend

AFTPC	Affected point code (for SCCP messages)
AFTSS	Affected subsystem (identifies the subsystem that failed)
DPC	Destination point code
LSN	Linkset name
MULT	SCCP management message multiplicity indicator
OPC	Origination point code
SCMG	SCCP management message
SIO	Service information octet
SR	Screening reference name
TYPE	SCCP management message type

Alarm Level

No alarm condition. The message is informational only.

Procedure

1. This output indicates that a SCCP message was discarded because it failed screening. No action is necessary, unless the message should have passed. If the message should have passed (verified by the fields displayed in the above message), go to Step 2.

2. Using the *rtrv-scr-cdpa* command, verify that the screening reference specified in the above message does not allow SCCP messages with the called party address indicated.

3. If the SCCP message should have passed screening, use the *ent-scr-cdpa* command to add the called party address to the screening reference.

1014 - GWS rcvd Translation Type not allowed

Description

This indicates an MSU requiring global title was received on a gateway link but failed screening because of the translation type indicated in the message.

Example

```
RLGHNCXA21W 00-04-18 18:59:23 EST  EAGLE 35.0.0
0101.1014    CARD 1205,B  INFO   GWS rcvd Translation Type not allowed
             SIO=0a   OPC=003-244-000  DPC=   000-071-000
             SCCP MT=  18
             CDPA:  AI=10  PC=003-003-003  SSN=005  TT=250
                    ADDR=ABCDEF1234567890ABCDE
             CGPA:  AI=10  PC=004-004-004  SSN=005  TT=251
                    ADDR=ABCDEF1234567890ABCDE
             SR=scrb     LSN=A1234567
```

Legend

ADDR	Address	AI	Address Indicator
CDPA	Called party address	CGPA	Calling party address
DPC	Destination point code	LSN	Linkset name
OPC	Origination point code	PC	Point code
SCCP MT	SCCP message type	SIO	Service information octet
SR	Screening reference name	SSN	Subsystem number
TT	Translation type		

Alarm Level

No alarm condition. The message is informational only.

Procedure

1. This output indicates that an MSU requiring global title translation was discarded because it failed screening. No action is necessary, unless the message should have passed. If the message should have passed (verified by the fields displayed in the above message), go to Step 2.

2. Using the *rtrv-scr-tt* command, verify that the screen name specified in the above message does not allow MSUs with the translation type indicated.

3. If the MSU should have passed screening, use the *ent-scr-tt* command to add the translation type to the screening reference.

1015 - GWS rcvd SCMG with not allowed AFTPC

Description

This message indicates that an SCCP management message (SCMG) was received on a gateway link and failed gateway screening because of the affected point code.

Example

```
RLGHNCXA21W 00-04-18 18:59:30 EST  EAGLE 35.0.0
0102.1015    CARD 1205,B  INFO   GWS rcvd Cld Party that is not allowed
             SIO=03   OPC= s-003-245-000  DPC= s-001-004-000
             SCMG:    TYPE=000  AFTPC=003-003-003
                      MULT=000  AFTSS=005
             SR=scrb  LSN=A1234567
```

Legend

AFTPC	Affected point code (for SCCP messages)
AFTSS	Affected subsystem (identifies the subsystem that failed)
DPC	Destination point code
LSN	Linkset name
MULT	SCCP management message multiplicity indicator
OPC	Origination point code
SCMG	SCCP management message
SIO	Service information octet
SR	Screening reference name
TYPE	SCCP management message type

Alarm Level

No alarm condition. The message is informational only.

Procedure

1. This output indicates that an SCCP management message was discarded because it failed screening. No action is necessary, unless the message should have passed. If the message should have passed (verified by the fields displayed in the above message), go to Step 2.

2. Using the *rtrv-scr-aftpc* command, verify that the screening reference specified in the above message does not allow SCCP management messages with the affected point code indicated.

3. If the message should have passed screening, use the *ent-scr-aftpc* command to add the affected point code to the screening reference.

1016 - MTP Adj PC not in routing table

Description

This message indicates that an MSU was received with an adjacent point code not found in the EAGLE 5 ISS routing table.

Example

```
RLGHNCXA21W 00-11-18 19:12:00 EST  EAGLE 35.0.0
0147.1016    CARD 1201,A  INFO   MTP Adj PC not in routing table
             OPC=001-001-001  CPC=002-002-002
             LSN=lsn01a
```

Legend

CPC	Concerned point code
LSN	Linkset name
OPC	Origination point code

Alarm Level

No alarm condition. The message is informational only.

Procedure

1. This output indicates that an MSU was discarded because the DPC did not appear in the system linkset table. Network messages are valid only from adjacent point codes.

2. If the MSU should have passed screening, use the *chg-scr-sio* command to add the pri data to the screening reference.

1017 - MTP Message Received for Network 255

Description

This message indicates that the network routing feature is on and the EAGLE 5 ISS has detected network management messages concerning network 255. The network routing feature cannot be used when the EAGLE 5 ISS is used with network 255.

Example

```
RLGHNCXA21W 00-04-18 18:59:58 EST  EAGLE 35.0.0
0105.1017   CARD 1201,A  INFO   MTP Message Received for Network 255
             SIO=08   OPC s-=003-247-000  DPC= s-002-000-000
             DATA=12 34 56 78 90 12 34 56 78 90 12 34
                  56 78 90 12 34 56 78 90 12 34 56 78
             SR=osp3  LSN=A1234567
```

Legend

DATA	Information from the upper layers of SCCP management
DPC	Destination point code
LSN	Linkset name
OPC	Origination point code
SIO	Service information octet
SR	Screening reference name

Alarm Level

No alarm condition. The message is informational only.

Procedure

1. This message is an indication serious network management problems. Call Tekelec Technical Services at the appropriate number.

   Reference: “Customer Care Center” on page 1-13

1018 - REPT-MTPERR: MTP rcvd invalid SIO

Description

A MSU is discarded when the EAGLE 5 ISS is unable to perform MTP-level routing.

Example

```
RLGHNCXA21W 00-04-18 19:09:14 EST  EAGLE 35.0.0
0140.1018  CARD 1201,A  INFO REPT-MTPERR: MTP rcvd invalid SIO
            SIO=07   OPC=001-001-001   DPC=002-002-002
            LSN=A1234567
```

Legend

DPC	Destination point code
LSN	Linkset name
OPC	Origination point code
SIO	Service information octet

Alarm Level

No alarm condition. The message is informational only.

Procedure

1. This indicates that a MSU was discarded because of an undefined point code or an invalid SIO. This message is displayed only when the total number of discarded SIOs is less than a specified limit over a specified period time. No action is necessary, unless the MSU should have passed. If the MSU should have passed (verified by the fields displayed in the above message), go to Step 2.

2. Using the *rtrv-scr-sio* command, verify that the screening reference specified in the above message does not allow MSUs with the value indicated.

3. If the MSU should have passed screening, use the *chg-scr-sio* command to add the appropriate data to the screening reference.

4. If the SIO is not one that the EAGLE 5 ISS should be able to route to, no action is necessary.

1019 - SCCP rcvd invalid UDTS/XUDTS msg

Description

SCCP received a user data service (UDTS)/extended user data service (XUDTS) message from the network that was discarded because of an invalid message type indicator.

Example

```
RLGHNCXA21W 00-04-18 19:00:05 EST  EAGLE 35.0.0
0106.1019    CARD 1103,A  INFO   SCCP rcvd invalid UDTS/XUDTS msg
             SIO=03   OPC=   003-251-000  DPC=   001-004-000
             CDPA: SSN=005    TT=250
             CGPA: SSN=000    TT=000
             RETURN CAUSE=001
             DATA=26 80 03 09 0e 06 09 00 fe 08 50 55 05
                  43 00 00 00 00 00
             LSN=A1234567
```

Legend

CDPA	Called party address
CGPA	Calling party address
DATA	Information from the upper layers of SCCP management
DPC	Destination point code
LSN	Linkset name
OPC	Origination point code
RETURN CAUSE	Identifies the reason for the returned message (for connectionless protocols)
SIO	Service information octet
SSN	Subsystem number
TT	Translation type

Alarm Level

No alarm condition. The message is informational only.

Procedure

1. This indicates that SCCP received a UDTS/XUDTS message that was discarded because the message type field contained a value invalid in the system. No action is necessary.

   NOTE: The UDTS/XUDTS message is used in the SCCP protocol to indicate an error in a UDT message. The UDT was sent to another node, an error was found, and the UDTS/XUDTS message was returned with the following fields:

   - Message type
   - Return cause
   - Called party address
   - Calling party address
   - Data

1020 - SCCP rcvd invalid XUDT msg

Description

SCCP received an extended unit data message (XUDT) from the network that was discarded because of an invalid message type indicator.

Example

```
RLGHNCXA21W 00-04-18 19:00:11 EST  EAGLE 35.0.0
0107.1020    CARD 1103,A  INFO   SCCP rcvd invalid XUDT msg
             SIO=0a   OPC=003-252-000  DPC=000-071-000
             CDPA: SSN=005    TT=250
             CGPA: SSN=000    TT=000
             RETURN CAUSE=001
             DATA=26 80 03 09 0e 06 09 00 fe 08 50 55 05
                  43 00 00 00 00 00
             LSN=A1234567
```

Legend

CDPA	Called party address
CGPA	Calling party address
DATA	Information from the upper layers of SCCP management
DPC	Destination point code
LSN	Linkset name
OPC	Origination point code
RETURN CAUSE	Identifies the reason for the returned message (for connectionless protocols)
SIO	Service information octet
SSN	Subsystem number
TT	Translation type

Alarm Level

No alarm condition. The message is informational only.

Procedure

1. This indicates that SCCP received a XUDT/LUDT message that was discarded because the message type field contained a value invalid in the system. No action is necessary.

NOTE: The XUDT message is the same as an UDT. The XUDT provides additional information, such as the hop counter.

1021 - SCCP rcvd invalid XUDTS msg

Description

SCCP received an extended unit data service (XUDTS) message from the network that was discarded because of an invalid message type.

Example

```
RLGHNCXA21W 00-04-18 19:01:03 EST  EAGLE 35.0.0
0108.1021    CARD 1103,A  INFO   SCCP rcvd invalid XUDTS msg
             SIO=0a   OPC=003-253-000  DPC=000-001-000
             CDPA: SSN=005    TT=250
             CGPA: SSN=000    TT=000
             RETURN CAUSE=001
             DATA=26 80 03 09 0e 06 09 00 fe 08 50 55 05
                  43 00 00 00 00 00
             LSN=A1234567
```

Legend

CDPA	Called party address
CGPA	Calling party address
DATA	Information from the upper layers of SCCP management
DPC	Destination point code
LSN	Linkset name
OPC	Origination point code
RETURN CAUSE	Identifies the reason for the returned message (for connectionless protocols)
SIO	Service information octet
SSN	Subsystem number
TT	Translation type

Alarm Level

No alarm condition. The message is informational only.

Procedure

1. This indicates that SCCP received a XUDTS message that was discarded because the message type field contained a value invalid in the system. No action is necessary.

NOTE: The XUDTS message is used in the SCCP protocol to indicate an error in a XUDT message. The XUDTwas sent to another node, an error was found, and the XUDTS message was returned with the following fields:

- Message type
- Return cause
- SCCP hop counter
- Called party address
- Calling party address
- Data
- ISNI
- Segmentation

1022 - System Meas. limit exceeded for LSONISMT

Description

This UIM alarm is issued when the either of these limits is exceeded:

- Maximum of 3000 LSONISMT measurements, or
- Maximum of 100 ISUP message type measurements per linkset.

Example

```
RLGHNCXA21W 00-04-18 19:09:14 EST  EAGLE 35.0.0
0140.1022  SYSTEM  INFO   System Meas. limit exceeded for LSONISMT
```

Alarm Level

No alarm condition. The message is informational only.

Procedure

1. Each link in a linkset collects measurements for 100 ISUP message type measurements. Only the first 100 types collected per linkset are reported. Those links that are not reported in the LSONISMT Report have their counts added to the totals in the LSORIGNI Gateway Report and the STP Report (MSUDSCRD field).

2. If the system total exceeds 3000, only the first 3000 collected are reported in the LSONISMT Gateway Report. Any counts not included in this report are added to the totals in the LSORIGNI Gateway Report and the STP Report (MSUDSCRD field).

1023 - SCCP rcvd unknown msg type

Description

SCCP received a message from the network that was discarded because of an unknown message type indicator.

Example

```
RLGHNCXA21W 00-04-18 19:01:09 EST  EAGLE 35.0.0
0109.1023    CARD 1103,A  INFO   SCCP rcvd unknown msg type
             SIO=0a   OPC=   003-255-000  DPC=   000-024-000
             DATA=26 80 03 09 0e 06 09 00 fe 08 50 55 05
                  43 00 00 00 00 00
             LSN=A1234567
```

Legend

DATA	Information from the upper layers of SCCP management
DPC	Destination point code
LSN	Linkset name
OPC	Origination point code
SIO	Service information octet

Alarm Level

No alarm condition. The message is informational only.

Procedure

1. This indicates that SCCP received a message that was discarded because the message type field contained an invalid field for the system. No action is necessary.

1024 - SCCP rcvd inv msg length

Description

SCCP received a message from the network that was discarded because of an invalid message length.

Example

```
RLGHNCXA21W 00-04-18 19:01:15 EST  EAGLE 35.0.0
0110.1024    CARD 1103,A  INFO   SCCP rcvd inv msg length
             SIO=0a   OPC=   004-000-000  DPC=   000-071-000
             DATA=26 80 03 09 0e 06 09 00 fe 08 50 55 05
                  43 00 00 00 00 00
             LSN=A1234567
```

Legend

DATA	Information from the upper layers of SCCP management
DPC	Destination point code
LSN	Linkset name
OPC	Origination point code
SIO	Service information octet

Alarm Level

No alarm condition. The message is informational only.

Procedure

1. This indicates that SCCP received a message that was discarded because the message length field contained an invalid field for the system. No action is necessary.

1025 - SCCP rcvd inv msg class

Description

SCCP received a message from the network that was discarded because of an invalid message class.

Example

```
RLGHNCXA21W 00-04-18 19:01:40 EST  EAGLE 35.0.0
0111.1025    CARD 1103,A  INFO   SCCP rcvd inv msg class
             SIO=0a   OPC= s-004-001-000  DPC= s-000-071
-000
             CDPA SS=000    CDPA TT=000
             CGPA SS=000    CGPA TT=000
             CLASS=000      MSG TYPE=00
             LSN=A1234567
```

Legend

CDPA	Called party address
CGPA	Calling party address
CLASS	Message class
DPC	Destination point code
LSN	Linkset name
MSG TYPE	Message type
OPC	Origination point code
SIO	Service information octet
SS	Subsystem
TT	Translation type

Alarm Level

No alarm condition. The message is informational only.

Procedure

1. This indicates that SCCP received a message that was discarded because the message class field contained an invalid value for the system. No action is necessary.

1026 - System Meas Limit exceeded for LSORIGNI

Description

This gateway related data has exceeded its threshold for the accumulation interval.

Example

```
RLGHNCXA21W 00-04-18 19:05:43 EST  EAGLE 35.0.0
0128.1026    CARD 1105  INFO   System Meas Limit exceeded for LSORGNI
```

Alarm Level

No alarm condition. The message is informational only.

Procedure

1. No action necessary.

1027 - System Meas Limit exceeded for LSDESTNI

Description

This gateway related data has exceeded its threshold for the accumulation interval.

Examples

```
RLGHNCXA21W 00-04-18 19:05:43 EST  EAGLE 35.0.0
0128.1027    CARD 1105  INFO   System Meas Limit exceeded for LSDESTNI
```

Alarm Level

No alarm condition. The message is informational only.

Procedure

1. No action necessary.

1028 - System Meas. Limit exceeded for ORIGNI/NINC

Description

This gateway related data has exceeded its threshold for the accumulation interval.

Examples

```
RLGHNCXA21W 00-04-18 19:05:43 EST  EAGLE 35.0.0
0128.1028   CARD 1105  INFO   System Meas. Limit exceeded for ORIGNI/NINC
```

Alarm Level

No alarm condition. The message is informational only.

Procedure

1. No action necessary.

1029 - SCCP rcvd inv Cld Party - bad GT ind

Description

SCCP received a message from the network that was discarded because of a bad global title indicator in the called party address.

Example

```
RLGHNCXA21W 00-04-18 19:02:05 EST  EAGLE 35.0.0
0112.1029    CARD 1103,A1  INFO   SCCP rcvd inv Cld Party - bad GT ind
             SIO=03   OPC=   001-001-001  DPC=   002-002-002
             CDPA LENGTH=000   MSG TYPE=04
             CDPA: AI=10 PC=003-003-003 SSN=005 TT=250
                   ADDR=12345678901234567890
             DATA=3a e2 38 c7 04 56 04 72 e0 e8 30 e9
                  2e cf 01 00 d0 02 83 01 f2 25 aa 0b
                  84 09 01 00 11 0a 19 49
             LSN=A1234567
```

Legend

SIO	Service information octet	OPC	Origination point code
DPC	Destination point code	CDPA Length	Called party address length
AI	Address Indicator	SSN	Subsystem number
TT	Translation type	ADDR	Address
CGPA	Calling party address	PC	Point code
DATA	Hex dump of TCAP part of MSU	MSG TYPE	Message type
LSN	Linkset name		

Alarm Level

No alarm condition. The message is informational only.

Procedure

1. This indicates that SCCP received a message that was discarded because the global title field in the called party address was invalid in the EAGLE 5 ISS. No action is necessary.

1030 - Inh EIR SS request already outstanding

Description

An *inh-map-ss* command is already entered and queued.

For more information about the **inh-map-ss** command, refer to the *Commands Manual*.

Example

```
RLGHNCXA21W 03-08-18 19:09:14 EST  EAGLE 35.0.0
0140.1030  CARD 1201  INFO  Inh EIR SS request already outstanding
```

Alarm Level

No alarm condition. The message is informational only.

Procedure

1. No action necessary.

1031 - Failure Inhibiting EIR SS

Description

The *inh-map-ss* command was unsuccessful in taking the EIR subsystem off-line. For more information about the **inh-map-ss** command, refer to the *Commands Manual*.

Example

```
RLGHNCXA21W 03-08-18 19:09:14 EST  EAGLE 35.0.0
0140.1031  CARD 1201  INFO  Failure Inhibiting EIR SS
```

Alarm Level

No alarm condition. The message is informational only.

Procedure

1. Enter the **inh-map-ss** command with the **force** parameter.

1032 - Set ETS Mismatch

Description

There is a discontinuity between the ETS broadcast and what the card expects. A discontinuity can occur when both OAM cards are booted at the same time and ETS gets reset to zero.

Example

```
RLGHNCXA21W 03-08-18 19:09:14 EST  EAGLE 35.0.0
0140.1032  CARD 1201  INFO  Set ETS Mismatch
```

Alarm Level

No alarm condition. The message is informational only.

Procedure

1. The affected LIM/ATM/STC card recalibrates to the new ETS value and should continue to operate correctly. If not, this is a reference point for possible invalid timestamps to Sentinel.

1033 - SCCP rcvd inv Cld Party - bad network

Description

SCCP received a message from the network that it could not route and was discarded because of an invalid network indicator in the called party address.

Example

```
RLGHNCXA21W 00-04-18 19:02:12 EST  EAGLE 35.0.0
0113.1033    CARD 1103,A1  INFO   SCCP rcvd inv Cld Party - bad network
             SIO=03   OPC=   001-001-001  DPC=   002-002-002
             CDPA LENGTH=000   MSG TYPE=04
             CDPA: AI=10 PC=   003-003-003 SSN=005 TT=250
                   ADDR=12345678901234567890
             LSN=A1234567
```

Legend

SIO	Service information octet	OPC	Origination point code
DPC	Destination point code	CDPA Length	Called party address length
AI	Address Indicator	SSN	Subsystem number
TT	Translation type	ADDR	Address
CGPA	Calling party address	PC	Point code
LSN	Linkset name	MSG TYPE	Message type

Alarm Level

No alarm condition. The message is informational only.

Procedure

1. This indicates that SCCP discarded a message because the network indicator (national or international) provided in the called party address is invalid in the EAGLE 5 ISS. No action is necessary.

1034 - SCCP rcvd inv Cld Party - no SSN

Description

SCCP received a message from the network that it could not route and was discarded because no subsystem number was present in the called party address.

Example

```
RLGHNCXA21W 00-04-18 19:02:41 EST  EAGLE 35.0.0
0114.1034    CARD 1201,A  INFO   SCCP rcvd inv Cld Party - no SSN
             SIO=03   OPC=   001-001-001  DPC=   002-002-002
             CDPA LENGTH=000   MSG TYPE=04
             CDPA: AI=10 PC=   003-003-003  SSN=005  TT=250
                   ADDR=12345678901234567890
             LSN=A1234567
```

Legend

SIO	Service information octet	OPC	Origination point code
DPC	Destination point code	CDPA Length	Called party address length
AI	Address Indicator	SSN	Subsystem number
TT	Translation type	ADDR	Address
CGPA	Calling party address	PC	Point code
LSN	Linkset name	MSG TYPE	Message type

Alarm Level

No alarm condition. The message is informational only.

Procedure

1. The sender of the discarded message is using an invalid message format. If there is only one occurrence, no action is necessary. However, if the condition continues, there may be a problem at the node that is sending the invalid message. Contact that node and inform them of the problem.

1035 - SCCP rsp did not route - invalid GTI

Description

This message indicates the SCCP response did not route because of an invalid GTI in the calling party of the query.

Example

```
station1234 00-10-30 16:28:08 EST EAGLE 35.0.0
    0018.1035    CARD 1103,A  INFO  SCCP rsp did not route - invalid GTI
                 SIO=03   OPC=   001-001-001    DPC=   002-002-002
                 SCCP MSG TYPE=04
                 CDPA:  NI=1  RI=0    GTI=04  SSNI=1  PCI=1
                        TT=250   NP=04  NAI=010  ADDR=123456789012345678901
                        PC=   003-003-003  SSN=005
                 CGPA:  NI=1  RI=0    GTI=04  SSNI=1  PCI=1
                        TT=100   NP=07  NAI=012  ADDR=012345678901234567890
                        PC=001-001-001  SSN=004
                 LSN=A1234567  GTTSET=3  203 46
```

Legend

ADDR	Address	CDPA	Called party address
CGPA	Calling party address	GTI	Global title indicator
GTTSET	GTT Set Index	LSN	Linkset name
NAI	Nature of address indicator	NI	Network indicator value
NP	Numbering plan	PC	Point code
PCI	Point code indicator	RI	Routing indicator
SSN	Subsystem number	SSNI	Subsystem number indicator
TT	Translation type		
TRANSLATED PC	Translated point code		
TRANSLATED SS	Translated subsystem		

NOTE: If Global Title Translation is found, the GTTSET in which the translation is found appears. If Global Title Translation is not found, the GTTSET does not display.

Alarm Level

No alarm condition. The message is informational only.

Procedure

1. Change the message to include a valid GTI in the CGPA part of the query. Specify GTI=2 for ANSI, and specify GTI=2 or GTI=4, as appropriate for ITU.

1036 - SCCP rsp did not route - invalid TT

Description

This message indicates the SCCP response did not route because of an invalid TT in the calling party of the query.

Example

```
station1234 00-10-30 16:28:08 EST EAGLE 35.0.0
    0018.1036    CARD 1103,A  INFO  SCCP rsp did not route - invalid TT
                 SIO=03   OPC=   001-001-001    DPC=   002-002-002
                 SCCP MSG TYPE=04
                 CDPA:  NI=1  RI=0    GTI=04  SSNI=1  PCI=1
                        TT=250   NP=04  NAI=010  ADDR=123456789012345678901
                        PC=   003-003-003  SSN=005
                 CGPA:  NI=1  RI=0    GTI=04  SSNI=1  PCI=1
                        TT=100   NP=07  NAI=012  ADDR=01234567890123456789O
                        PC=001-001-001  SSN=004
               LSN=A1234567  GTTSET=3  203 46
```

Legend

ADDR	Address	CDPA	Called party address
CGPA	Calling party address	GTI	Global title indicator
GTTSET	GTT Set Index	LSN	Linkset name
NAI	Nature of address indicator	NI	Network indicator value
NP	Numbering plan	PC	Point code
PCI	Point code indicator	RI	Routing indicator
SSN	Subsystem number	SSNI	Subsystem number indicator
TT	Translation type		
TRANSLATED PC	Translated point code		
TRANSLATED SS	Translated subsystem		

NOTE: If Global Title Translation is found, the GTTSET in which the translation is found appears. If Global Title Translation is not found, the GTTSET does not display.

Alarm Level

No alarm condition. The message is informational only.

Procedure

1. Provision the CGPA TT in the GTT TT table using the *ent-tt* command.

1037 - SCCP rsp did not route - bad Xlation

Description

This message indicates the SCCP response did not route because of an invalid translation in the calling party of the query.

Example

```
station1234 00-10-30 16:28:08 EST EAGLE 35.0.0
    0018.1037    CARD 1103,A  INFO  SCCP rsp did not route - bad Xlation
                 SIO=03   OPC=   001-001-001    DPC=   002-002-002
                 SCCP MSG TYPE=04
                 CDPA:  NI=1  RI=0    GTI=04  SSNI=1  PCI=1
                        TT=250   NP=04  NAI=010  ADDR=123456789012345678901
                        PC=   003-003-003  SSN=005
                 CGPA:  NI=1  RI=0    GTI=04  SSNI=1  PCI=1
                        TT=100   NP=07  NAI=012  ADDR=012345678901234567890
                PC=001-001-001  SSN=004
                LSN=A1234567  GTTSET=3  203 46
```

Legend

ADDR	Address	CDPA	Called party address
CGPA	Calling party address	GTI	Global title indicator
GTTSET	GTT Set Index	LSN	Linkset name
NAI	Nature of address indicator	NI	Network indicator value
NP	Numbering plan	PC	Point code
PCI	Point code indicator	RI	Routing indicator
SSN	Subsystem number	SSNI	Subsystem number indicator
TT	Translation type		
TRANSLATED PC	Translated point code		
TRANSLATED SS	Translated subsystem		

NOTE: If Global Title Translation is found, the GTTSET in which the translation is found appears. If Global Title Translation is not found, the GTTSET does not display.

Alarm Level

No alarm condition. The message is informational only.

Procedure

1. Provision the CGPA GTA address in the GTT database using the *ent-gtt* command.

1038 - SCCP rsp did not route -SSP not True PC

Description

This message indicates the SCCP response did not route because the SSP (OPC or CGPA Point Code) is not the True Point Code.

Example

```
station1234 00-10-30 16:28:08 EST EAGLE 35.0.0
    0018.1038    CARD 1103,A  INFO  SCCP rsp did not route -SSP not True PC
                 SIO=03   OPC=   001-001-001    DPC=   002-002-002
                 SCCP MSG TYPE=04
                 CDPA:  NI=1  RI=0    GTI=04  SSNI=1  PCI=1
                        TT=250   NP=04  NAI=010  ADDR=123456789012345678901
                        PC=   003-003-003  SSN=005
                 CGPA:  NI=1  RI=0    GTI=04  SSNI=1  PCI=1
                        TT=100   NP=07  NAI=012  ADDR=01234567890123456789O
                        PC=001-001-001  SSN=004
               LSN=A1234567  GTTSET=3  203 46
```

Legend

ADDR	Address	CDPA	Called party address
CGPA	Calling party address	GTI	Global title indicator
GTTSET	GTT Set Index	LSN	Linkset name
NAI	Nature of address indicator	NI	Network indicator value
NP	Numbering plan	PC	Point code
PCI	Point code indicator	RI	Routing indicator
SSN	Subsystem number	SSNI	Subsystem number indicator
TT	Translation type		
TRANSLATED PC	Translated point code		
TRANSLATED SS	Translated subsystem		

NOTE: If Global Title Translation is found, the GTTSET in which the translation is found appears. If Global Title Translation is not found, the GTTSET does not display.

Alarm Level

No alarm condition. The message is informational only.

Procedure

1. Change the message to use the True Point Code in the CGPA point code or OPC of the query.

1039 - SCCP rsp did not route - bad Selectors

Description

This message indicates the SCCP response did not route because of invalid selectors (e.g., GTI, TT, NP, NAI) in the calling party of the query.

Example

```
station1234 00-10-30 16:28:08 EST EAGLE 35.0.0
    0018.1039    CARD 1103,A   INFO  SCCP rsp did not route - bad Selectors
                 SIO=03   OPC=   001-001-001    DPC=   002-002-002
                 SCCP MSG TYPE=04
                 CDPA:  NI=1  RI=0    GTI=04  SSNI=1  PCI=1
                        TT=250   NP=04  NAI=010  ADDR=123456789012345678901
                        PC=   003-003-003  SSN=005
                 CGPA:  NI=1  RI=0    GTI=04  SSNI=1  PCI=1
                        TT=100   NP=07  NAI=012  ADDR=012345678901234567890
                        PC=   '001-001-001  SSN=004
               LSN=A1234567  GTTSET=3  203 46
```

Legend

ADDR	Address	CDPA	Called party address
CGPA	Calling party address	GTI	Global title indicator
GTTSET	GTT Set Index	LSN	Linkset name
NAI	Nature of address indicator	NI	Network indicator value
NP	Numbering plan	PC	Point code
PCI	Point code indicator	RI	Routing indicator
SSN	Subsystem number	SSNI	Subsystem number indicator
TT	Translation type		
TRANSLATED PC	Translated point code		
TRANSLATED SS	Translated subsystem		

NOTE: If Global Title Translation is found, the GTTSET in which the translation is found appears. If Global Title Translation is not found, the GTTSET does not display.

Alarm Level

No alarm condition. The message is informational only.

Procedure

1. Provision the CGPA GTI, TT, NP, and NAI in the EGTT selector table using the commands *ent-gttsel* (to assign global title selectors to a GTT set for EGTT) and *ent-gttset* (to specify the attributes for a new GTT set).

1040 - ITU <-> ANSI translation not supported

Description

This message indicates an invalid translation PC type in attempting to cross the ANSI to ITU domain.

Example

```
station1234 02-07-21 16:28:08 EST EAGLE 35.0.0-46.12.0
0019.1040    CARD 1104,A   INFO    ITU <-> ANSI translation not supported
             TRANSLATED PC=   003-003-003    TRANSLATED SS=005
             CDPA:  NI=1  RI=0  GTI=04  SSNI=0  PCI=1
                    TT=250  NP=04  NAI=010  ADDR=123456789012345678901
                    PC=   003-003-003    SSN=005
             CGPA:  NI=1  RI=0  GTI=04  SSNI=0  PCI=1
                    TT=100  NP=07  NAI=012  ADDR=01234567890123456789O
                    PC=   001-001-001  SSN=004
            LSN=A1234567  GTTSET=3 (8)
```

Legend

ADDR	Address	CDPA	Called party address
CGPA	Calling party address	GTI	Global title indicator
GTTSET	GTT Set Index	LSN	Linkset name
NAI	Nature of address indicator	NI	Network indicator value
NP	Numbering plan	PC	Point code
PCI	Point code indicator	RI	Routing indicator
SSN	Subsystem number	SSNI	Subsystem number indicator
TT	Translation type		
TRANSLATED PC	Translated point code		
TRANSLATED SS	Translated subsystem		

NOTE: If Global Title Translation is found, the GTTSET in which the translation is found appears. If Global Title Translation is not found, the GTTSET does not display.

Alarm Level

No alarm condition. The message is informational only.

Procedure

1. Change the translation PC type to not cross the domain (ANSI <-> ITU), by using the appropriate EPAP commands. Refer to the *EPAP Administration Manual*.

1041 - SCCP did not route -no SSN in msg or DB

Description

This message indicates the SCCP message did not route because the SSN was not found in the message or translation data.

Example

```
station1234 00-10-30 16:28:08 EST EAGLE 35.0.0
    0143.1041    CARD 1104,A    SCCP did not route -no SSN in msg or DB
                 SIO=03   OPC=001-001-001    DPC=002-002-002
                 SCCP MSG TYPE=04
                 CDPA:  NI=1  RI=0    GTI=04  SSNI=1  PCI=1
                        TT=250   NP=04  NAI=010  ADDR=123456789012345678901
                        PC=   003-003-003  SSN=005
                 CGPA:  NI=1  RI=0    GTI=04  SSNI=1  PCI=1
                        TT=100   NP=07  NAI=012  ADDR=01234567890123456789O
                        PC=   001-001-001  SSN=004
               LSN=A1234567  GTTSET=3  203 46
```

Legend

ADDR	Address	CDPA	Called party address
CGPA	Calling party address	GTI	Global title indicator
GTTSET	GTT Set Index	LSN	Linkset name
NAI	Nature of address indicator	NI	Network indicator value
NP	Numbering plan	PC	Point code
PCI	Point code indicator	RI	Routing indicator
SSN	Subsystem number	SSNI	Subsystem number indicator
TT	Translation type		
TRANSLATED PC	Translated point code		
TRANSLATED SS	Translated subsystem		

NOTE: If Global Title Translation is found, the GTTSET in which the translation is found appears. If Global Title Translation is not found, the GTTSET does not display.

Alarm Level

No alarm condition. The message is informational only.

Procedure

1. Change the message to include the CDPA SSN in the message or provision the SSN in the translation table. You can change the translation table by using the appropriate

GTT (`ent-gtt` or `ent-gta`) or the EPAP commands. Refer to the *Commands Manual* or the *EPAP Administration Manual*, respectively for details.

1042 - SCCP rcvd inv GT - bad Translation Type

Description

SCCP received a message from the network requiring global title translation but the message was discarded because the system did not recognize the translation type.

Example

```
RLGHNCXA21W 00-04-18 19:02:47 EST  EAGLE 35.0.0
0115.1042    CARD 1103,A  INFO   SCCP rcvd inv GT - bad Translation Type
             SIO=03   OPC=   001-001-001  DPC=   002-002-002
             CDPA LENGTH=000   MSG TYPE=04
             CDPA: AI=10 PC=   003-003-003 SSN=005 TT=250
                   ADDR=12345678901234567890
             LSN=A1234567
```

Legend

SIO	Service information octet	OPC	Origination point code
DPC	Destination point code	CDPA Length	Called party address length
AI	Address Indicator	SSN	Subsystem number
TT	Translation type	ADDR	Address
CGPA	Calling party address	PC	Point code
LSN	Linkset name	MSG TYPE	Message type

Alarm Level

No alarm condition. The message is informational only.

Procedure

1. This indicates a SCCP message was received with an invalid global title. The translation type indicator was invalid in the EAGLE 5 ISS. If this message should have been routed (verified by the output shown above), continue to Step 2.

2. Use the command *rtrv-tt*, and verify that the indicated translation type does not appear in the translation types table.

3. If there is no entry for the translation type indicated in the message, and there should be, use the *ent-tt* command to add the translation type to the EAGLE 5 ISS translation type table. Refer to the *Database Administration Manual - Global Title Translation* for more information about entering translation types.

1043 - SCCP did not route - bad translation

Description

SCCP did not route a message because it could not translate the global title. The message was discarded.

Example

```
RLGHNCXA21W 00-04-18 19:02:54 EST  EAGLE 35.0.0
0116.1043    CARD 1104,A  INFO   SCCP did not route -  bad translation
             SIO=03   OPC=   001-001-001  DPC=   002-002-002
             CDPA LENGTH=000   MSG TYPE=04
             CDPA: AI=10 PC=003-003-003 SSN=005 TT=250
                   ADDR=12345678901234567890
             LSN=A1234567
```

Legend

SIO	Service information octet	OPC	Origination point code
DPC	Destination point code	CDPA Length	Called party address length
AI	Address Indicator	SSN	Subsystem number
TT	Translation type	ADDR	Address
CGPA	Calling party address	PC	Point code
LSN	Linkset name	MSG TYPE	Message type

Alarm Level

No alarm condition. The message is informational only.

Procedure

1. This indicates that SCCP received a message with a global title translation it could not interpret. The message was discarded. No action is necessary.

1044 - SCCP did not route - DPC OOS

Description

SCCP did not route a message because the destination point code (DPC) was out-of-service (OOS), and therefore inaccessible for MTP routing. The message was discarded. This output is generated for ANSI applications.

Example

```
RLGHNCXA21W 00-04-18 19:03:01 EST  EAGLE 35.0.0
0117.1044   CARD 1104,A1  INFO   SCCP did not route - DPC OOS
            OPC=   001-001-001
            TRANSLATED PC=004-019-000  TRANSLATED SS=004
            CDPA LENGHT=006            MSG TYPE=83
            CDPA:  AI=10  PC=   004-004-004  SSN=006  TT=250
                   ADDR=ABCDEF1234567890ABCDE
            LSN=A1234567
```

Legend

ADDR	Address	AI	Address indicator
CDPA	Called party address	LSN	Linkset name
MSG TYPE	Message type	OPC	Origination point code
PC	Point code	SS	Subsystem
SSN	Subsystem number	TT	Translation type

Alarm Level

No alarm condition. The message is informational only.

Procedure

1. Check the route and linksets by entering the *rept-stat-dstn* and *rept-stat-ls* commands.

2. Check the UNAVAIL REASON field in the output of the *rept-stat-slk* command. Following is an explanation of the UNAVAIL REASON codes:

FL – The signaling link has a fault.

NA – The signaling link is not aligned.

LI – The signaling link has been inhibited locally

RI – The signaling link has been inhibited remotely.

LB – The signaling link has been blocked locally.

RB – The signaling link has been blocked remotely.

FC – The signaling link is unavailable because of false congestion.

RD(xx.xxx) – The signaling link is unavailable because of a restart delay to prevent signaling link oscillation. The number in parentheses indicates the amount of time, in seconds, remaining in the restart delay period. The link is restarted automatically after this amount of time has elapsed.

---

3. If the UNAVAIL REASON indicates an alignment problem or fault, activate a loopback using the *act-lpb* command, or use a physical loopback. (For a V.35, you must use an appropriate physical V.35 loopback.) If the signaling link aligns, contact the far-end to correct the problem.

---

4. If the UNAVAIL REASON still indicates an alignment problem or fault, check the status of the card by entering the *rept-stat-card* command for the specified card.

---

5. If the *rept-stat-card* command indicates a problem with the card, reset the card by entering the *init-card* command with the specified card location. If the card still does not align, try first reseating the card, then replacing the card (using the card replacement procedures in Appendix A, *Card Removal/Replacement Procedures*).

---

6. If the UNAVAIL REASON indicates a locally inhibited link, enter the *unhb-slk* command with the specified card location.

---

7. If the UNAVAIL REASON indicates a locally blocked link, enter the *ublk-slk* command with the specified card location.

---

8. Otherwise, this indicates a failure at the distant node. Routing to this node has been halted as a result of network management. Maintenance personnel should be aware of the OOS condition, but no action is necessary. Monitor the links to the DPC and verify the DPC status changes to IS-NR (In-Service - Normal).

1045 - SCCP did not route - DPC congested

Description

SCCP did not route a message because the destination point code (DPC) was congested. The message was discarded.This output is generated for ANSI applications.

Example

```
RLGHNCXA21W 00-04-18 19:03:08 EST  EAGLE 35.0.0
0118.1045    CARD 1104,A1  INFO   SCCP did not route - DPC congested
           OPC=   001-001-001
           TRANSLATED PC=004-019-000  TRANSLATED SS=004
           CDPA LENGHT=006            MSG TYPE=83
           CDPA:  AI=10  PC=   004-004-004  SSN=006  TT=250
                  ADDR=ABCDEF1234567890ABCDE
           LSN=A1234567
```

Legend

ADDR	Address	AI	Address indicator
CDPA	Called party address	LSN	Linkset name
MSG TYPE	Message type	OPC	Origination point code
PC	Point code	SS	Subsystem
SSN	Subsystem number	TT	Translation type

Alarm Level

No alarm condition. The message is informational only.

Procedure

1. This alarm indicates an SCCP message was discarded due to congestion at a distant node. Maintenance personnel should monitor the network and verify the nodes congestion status changes to zero (no congestion).

NOTE: A transfer controlled (TFC) SCCP message should have been received on the link to indicate congestion to this node. When the congestion status changes, the congestion status indicator in the flow control messages indicates what message type priorities can be transmitted to the distant node. If the condition persists, follow normal company procedures in dealing with congestion at distant nodes.

1046 - SCCP did not route - DPC not in MAP tbl

Description

SCCP did not route a message because the destination point code was not in the mated application (MAP) table. The message was discarded.This output is generated for ANSI applications.

Example

```
RLGHNCXA21W 00-04-18 19:03:13 EST  EAGLE 35.0.0
0119.1046   CARD 1104,A1  INFO   SCCP did not route - DPC not in MAP tbl
           OPC=   001-001-001
           TRANSLATED PC=004-019-000  TRANSLATED SS=004
           CDPA LENGHT=006            MSG TYPE=83
           CDPA:  AI=10  PC=   004-004-004  SSN=006  TT=250
                  ADDR=ABCDEF1234567890ABCDE
           LSN=A1234567
```

Legend

ADDR	Address	AI	Address indicator
CDPA	Called party address	LSN	Linkset name
MSG TYPE	Message type	OPC	Origination point code
PC	Point code	SS	Subsystem
SSN	Subsystem number	TT	Translation type

Alarm Level

No alarm condition. The message is informational only.

Procedure

1. If the DPC indicated in the message should not be routed to, no further action is necessary.

2. If the DPC should be routed to from the EAGLE 5 ISS, use the *ent-map* command to enter the DPC into the mated application (MAP) table.

1047 - SCCP did not route - SS OOS

Description

SCCP did not route a message because the destination subsystem (SSN) was out-of-service (OOS). The message was discarded.This output is generated for ANSI applications.

Example

```
RLGHNCXA21W 00-04-18 19:03:21 EST  EAGLE 35.0.0
0120.1047    CARD 1104,A1  INFO   SCCP did not route - SS OOS
           OPC=   001-001-001
           TRANSLATED PC=004-019-000  TRANSLATED SS=004
           CDPA LENGHT=006            MSG TYPE=83
           CDPA:  AI=10  PC=   004-004-004  SSN=006  TT=250
                  ADDR=ABCDEF1234567890ABCDE
           LSN=A1234567
```

Legend

ADDR	Address	AI	Address indicator
CDPA	Called party address	LSN	Linkset name
MSG TYPE	Message type	OPC	Origination point code
PC	Point code	SS	Subsystem
SSN	Subsystem number	TT	Translation type

Alarm Level

No alarm condition. The message is informational only.

Procedure

1. This indicates that an SCCP was discarded because the DPC SSN that it was addressed to is out-of-service (OOS). Contact the distant end node that this message refers to and verify that action is being taken to bring the SCCP back into service.

1048 - SCCP did not route - SS congested

Description

SCCP did not route a message because the subsystem was congested. The message was discarded.This output is generated for ANSI applications.

Example

```
RLGHNCXA21W 00-04-18 19:03:27 EST  EAGLE 35.0.0
0121.1048    CARD 1104,A1  INFO   SCCP did not route - SS congested
           OPC=   001-001-001
           TRANSLATED PC=   004-019-000  TRANSLATED SS=004
           CDPA LENGHT=006            MSG TYPE=83
           CDPA: AI=10  PC=004-004-004  SSN=006  TT=250
                 ADDR=ABCDEF1234567890ABCDE
           LSN=A1234567
```

Legend

ADDR	Address	AI	Address indicator
CDPA	Called party address	LSN	Linkset name
MSG TYPE	Message type	OPC	Origination point code
PC	Point code	SS	Subsystem
SSN	Subsystem number	TT	Translation type

Alarm Level

No alarm condition. The message is informational only.

Procedure

1. This message indicates an SCCP message was discarded due to congestion at a subsystem. Maintenance personnel should monitor the network and verify that the subsystem's congestion status changes to zero (no congestion).

1049 - SCCP did not route - SS not in MAP tbl

Description

SCCP did not route a message because the destination subsystem was not in the Mated Application (MAP) table. The message was discarded. This output is generated for ANSI applications.

Example

```
RLGHNCXA21W 00-04-18 19:04:01 EST  EAGLE 35.0.0
0124.1049  CARD 1104,A1  INFO   SCCP did not route - SS not in MAP tbl
           OPC=   001-001-00
           TRANSLATED PC=   004-019-000  TRANSLATED SS=00
           CDPA LENGHT=006            MSG TYPE=83
           CDPA:  AI=10  PC=   004-004-004  SSN=006  TT=250
                  ADDR=ABCDEF1234567890ABCDE
           LSN=A1234567
```

Legend

ADDR	Address	AI	Address indicator
CDPA	Called party address	LSN	Linkset name
MSG TYPE	Message type	OPC	Origination point code
PC	Point code	SS	Subsystem
SSN	Subsystem number	TT	Translation type

Alarm Level

No alarm condition. The message is informational only.

Procedure

1. If the subsystem indicated in the message is not a mated application to the EAGLE 5 ISS, no further action is necessary.

2. If the SCCP message should have been routed, use the *ent-map* command to add the subsystem number to the mated application (MAP) table.

1050 - SCCP-CNV: Unable to convert ANSI CDPA GT

Description

This message indicates that a SCCP MSU contained an undefined CDPA PC. The GTCNVDFLT STP Option is not enabled.

Example

```
RLGHNCXA21W 00-04-18 19:02:05 EST  EAGLE 35.0.0
0112.1050  CARD 1103,A1  INFO  SCCP-CNV: Unable to convert ANSI CDPA GT
           SIO=03   OPC=   001-001-001     DPC=   002-002-002
           SCCP MSG TYPE=04
           CDPA:  NI=1  RI=0    GTI=04  SSNI=1  PCI=1
                  TT=250   NP=04  NAI=010  ADDR=123456789012345678901
                  PC=   003-003-003  SSN=005
           CGPA:  NI=1  RI=0    GTI=04  SSNI=1  PCI=1
                  TT=100   NP=07  NAI=012  ADDR=01234567890123456789O
                  PC=   001-001-001  SSN=004
           LSN=A1234567  GTTSET=3  203 46
```

Legend

ADDR	Address	CDPA	Called party address
CGPA	Calling party address	GTI	Global title indicator
GTTSET	GTT Set Index	LSN	Linkset name
NAI	Nature of address indicator	NI	Network indicator value
NP	Numbering plan	PC	Point code
PCI	Point code indicator	RI	Routing indicator
SSN	Subsystem number	SSNI	Subsystem number indicator
TT	Translation type		
TRANSLATED PC	Translated point code		
TRANSLATED SS	Translated subsystem		

NOTE: If Global Title Translation is found, the GTTSET in which the translation is found appears. If Global Title Translation is not found, the GTTSET does not display.

Alarm Level

No alarm condition. The message is informational only.

Procedure

1. Perform one of the following actions:

- Enable the GTCNVDFLT STP Option, which would cause a default GT conversion to occur. Refer to the *Database Administration Manual - Global Title Translation* for details.

  OR

- Add the proper ANSI to ITU entry (matching TT) into the Default GT Conversion Table. Refer to the *Database Administration Manual - Global Title Translation* for details.

  OR

- Add a wildcard ANSI to ITU entry into the Default GT Conversion Table. Refer to the *Database Administration Manual - Global Title Translation* for details.

1051 - SCCP-CNV: Unable to convert ANSI CGPA GT

Description

This message indicates that a SCCP MSU contained an undefined CGPA PC. The GTCNVDFLT STP Option is not enabled.

Example

```
RLGHNCXA21W 00-04-18 19:02:05 EST  EAGLE 35.0.0
0112.1051  CARD 1103,A1  INFO  SCCP-CNV: Unable to convert ANSI CGPA GT
           SIO=03   OPC=   001-001-001     DPC=   002-002-002
           SCCP MSG TYPE=04
           CDPA:  NI=1  RI=0    GTI=04  SSNI=1  PCI=1
                  TT=250   NP=04  NAI=010  ADDR=123456789012345678901
                  PC=   003-003-003  SSN=005
           CGPA:  NI=1  RI=0    GTI=04  SSNI=1  PCI=1
                  TT=100   NP=07  NAI=012  ADDR=01234567890123456789O
                  PC=   001-001-001  SSN=004
           LSN=A1234567  GTTSET=3  203 46
```

Legend

ADDR	Address	CDPA	Called party address
CGPA	Calling party address	GTI	Global title indicator
GTTSET	GTT Set Index	LSN	Linkset name
NAI	Nature of address indicator	NI	Network indicator value
NP	Numbering plan	PC	Point code
PCI	Point code indicator	RI	Routing indicator
SSN	Subsystem number	SSNI	Subsystem number indicator
TT	Translation type		
TRANSLATED PC	Translated point code		
TRANSLATED SS	Translated subsystem		

NOTE: If Global Title Translation is found, the GTTSET in which the translation is found appears. If Global Title Translation is not found, the GTTSET does not display.

Alarm Level

No alarm condition. The message is informational only.

Procedure

1. Perform one of the following actions:

- Enable the GTCNVDFLT STP Option, which would cause a default GT conversion to occur. Refer to the *Database Administration Manual - Global Title Translation* for details.

  OR

- Add the proper ANSI to ITU entry (matching TT) into the Default GT Conversion Table. Refer to the *DDatabase Administration Manual - Global Title Translation* for details.

  OR

- Add a wildcard ANSI to ITU entry into the Default GT Conversion Table. Refer to the *Database Administration Manual - Global Title Translation* for details.

1052 - SCCP-CNV: Unable to convert ITU CDPA GT

Description

This message indicates that a SCCP MSU contained an undefined CDPA PC. The GTCNVDFLT STP Option is not enabled.

Example

```
RLGHNCXA21W 00-04-18 19:02:05 EST  EAGLE 35.0.0
0112.1052  CARD 1103,A1  INFO  SCCP-CNV: Unable to convert ITU CDPA GT
           SIO=03   OPC=   001-001-001     DPC=   002-002-002
           SCCP MSG TYPE=04
           CDPA:  NI=1  RI=0    GTI=04  SSNI=1  PCI=1
                  TT=250   NP=04  NAI=010  ADDR=123456789012345678901
                  PC=   003-003-003  SSN=005
           CGPA:  NI=1  RI=0    GTI=04  SSNI=1  PCI=1
                  TT=100   NP=07  NAI=012  ADDR=01234567890123456789O
                  PC=   001-001-001  SSN=004
           LSN=A1234567  GTTSET=3  203 46
```

Legend

ADDR	Address	CDPA	Called party address
CGPA	Calling party address	GTI	Global title indicator
GTTSET	GTT Set Index	LSN	Linkset name
NAI	Nature of address indicator	NI	Network indicator value
NP	Numbering plan	PC	Point code
PCI	Point code indicator	RI	Routing indicator
SSN	Subsystem number	SSNI	Subsystem number indicator
TT	Translation type		
TRANSLATED PC	Translated point code		
TRANSLATED SS	Translated subsystem		

NOTE: If Global Title Translation is found, the GTTSET in which the translation is found appears. If Global Title Translation is not found, the GTTSET does not display.

Alarm Level

No alarm condition. The message is informational only.

Procedure

1. Perform one of the following actions:

- Enable the GTCNVDFLT STP Option, which would cause a default GT conversion to occur. Refer to the *DDatabase Administration Manual - Global Title Translation* for details.

  OR

- Add the proper ANSI to ITU entry (matching NP/NAI/TT) into the Default GT Conversion Table. Refer to the *Database Administration Manual - Global Title Translation* for details.

  OR

- Add a wildcard ITU to ANSI entry into the Default GT Conversion Table. Refer to the *Database Administration Manual - Global Title Translation* for details.

1053 - SCCP-CNV: Unable to convert ITU CGPA GT

Description

This message indicates that a SCCP MSU contained an undefined CGPA PC. The GTCNVDFLT STP Option is not enabled.

Example

```
RLGHNCXA21W 00-04-18 19:02:05 EST  EAGLE 35.0.0
0112.1053  CARD 1103,A1  INFO  SCCP-CNV: Unable to convert ITU CGPA GT
           SIO=03   OPC=   001-001-001     DPC=   002-002-002
           SCCP MSG TYPE=04
           CDPA:  NI=1  RI=0    GTI=04  SSNI=1  PCI=1
                  TT=250   NP=04  NAI=010  ADDR=123456789012345678901
                  PC=   003-003-003  SSN=005
           CGPA:  NI=1  RI=0    GTI=04  SSNI=1  PCI=1
                  TT=100   NP=07  NAI=012  ADDR=01234567890123456789O
                  PC=   001-001-001  SSN=004
           LSN=A1234567  GTTSET=3  203 46
```

Legend

ADDR	Address	CDPA	Called party address
CGPA	Calling party address	GTI	Global title indicator
GTTSET	GTT Set Index	LSN	Linkset name
NAI	Nature of address indicator	NI	Network indicator value
NP	Numbering plan	PC	Point code
PCI	Point code indicator	RI	Routing indicator
SSN	Subsystem number	SSNI	Subsystem number indicator
TT	Translation type		
TRANSLATED PC	Translated point code		
TRANSLATED SS	Translated subsystem		

NOTE: If Global Title Translation is found, the GTTSET in which the translation is found appears. If Global Title Translation is not found, the GTTSET does not display.

Alarm Level

No alarm condition. The message is informational only.

Procedure

1. Perform one of the following actions:

- Enable the GTCNVDFLT STP Option, which would cause a default GT conversion to occur. Refer to the *Database Administration Manual - Global Title Translation* for details.

  OR

- Add the proper ANSI to ITU entry (matching NP/NAI/TT) into the Default GT Conversion Table. Refer to the *Database Administration Manual - Global Title Translation* for details.

  OR

- Add a wildcard ITU to ANSI entry into the Default GT Conversion Table. Refer to the *Database Administration Manual - Global Title Translation* for details.

1054 - SCCP rcvd inv LSS - bad SSN

Description

SCCP received a message destined to a local subsystem that was discarded because of a bad subsystem number (SSN).

Example

```
RLGHNCXA21W 00-04-18 19:02:47 EST  EAGLE 35.0.0
0115.1054    CARD 1103,A  INFO   SCCP rcvd inv LSS - bad SSN
             SIO=03   OPC=   001-001-001  DPC=   002-002-002
             CDPA LENGTH=000   MSG TYPE=04
             CDPA: AI=10 PC=   003-003-003 SSN=005 TT=250
                   ADDR=12345678901234567890
             LSN=A1234567
```

NOTE: Two outputs are possible. The Legend includes abbreviations found in both variations.

Legend

ADDR	Address	CDPA	Called party address
CGPA	Calling party address	GTI	Global title indicator
DPC	Destination point code	CDPA Length	Called party address length
AI	Address Indicator	SSN	Subsystem number
LSN	Linkset name	MSG TYPE	Message type
NAI	Nature of address indicator	NI	Network indicator value
NP	Numbering plan	OPC	Origination point code
PC	Point code	PCI	Protocol control information
RI	Routing indicator	SIO	Service information octet
TT	Translation type	SSNI	Subsystem number indicator

Alarm Level

No alarm condition. The message is informational only.

Procedure

1. The EAGLE 5 ISS supports only one subsystem. All other local subsystem numbers are invalid. No further action is necessary.

1055 - SCCP rcvd inv SCMG - bad AFTPC

Description

SCCP received an SCCP management message (SCMG) that was discarded because of a bad affected point code (AFTPC). The point code does not appear in the EAGLE 5 ISS routing tables.

Example

```
RLGHNCXA21W 00-04-18 19:04:15 EST  EAGLE 35.0.0
0124.1055    CARD 1106  INFO   SCCP rcvd inv SCMG - bad AFTPC
             SIO=0a   OPC=   004-031-000  DPC=   000-071-000
             SCMG: MSG TYPE=000   MSG LEN=003
                   AFTPC=   004-219-000   AFTSS=000   MULT=000
             LSN=A1234567
```

Legend

AFTPC	Affected point code (for SCCP messages)
AFTSS	Affected subsystem (identifies the subsystem that failed)
DPC	Destination point code
LSN	Linkset name
MULT	SCCP management message multiplicity indicator
OPC	Origination point code
SCMG	SCCP management message
MSG LEN	Message length
MSG TYPE	Message type
SIO	Service information octet

Alarm Level

No alarm condition. The message is informational only.

Procedure

1. Verify the point code in the message, and verify whether the point code is required to be in the EAGLE 5 ISS routing tables.

2. If the point code is not required to be in the EAGLE 5 ISS routing tables, no further action is necessary.

3. If the point code is required to be in the EAGLE 5 ISS routing table, use the *ent-dstn* command to add the point code to the EAGLE 5 ISS routing tables. Refer to the *Database Administration Manual - SS7* for more information about the procedure used to enter point codes to the EAGLE 5 ISS routing tables.

1056 - SCCP rcvd inv SCMG - bad subsystem

Description

SCCP received an SCCP management message (SCMG) that was discarded because of an invalid subsystem.

Example

```
RLGHNCXA21W 00-04-18 19:04:15 EST  EAGLE 35.0.0
0124.1056    CARD 1106  INFO   SCCP rcvd inv SCMG - bad subsystem
             SIO=0a   OPC=   004-031-000  DPC=   000-071-000
             SCMG: MSG TYPE=000   MSG LEN=003
                   AFTPC=   004-219-000   AFTSS=000   MULT=000
             LSN=A1234567
```

Legend

AFTPC	Affected point code (for SCCP messages)
AFTSS	Affected subsystem (identifies the subsystem that failed)
DPC	Destination point code
LSN	Linkset name
MULT	SCCP management message multiplicity indicator
OPC	Origination point code
SCMG	SCCP management message
MSG LEN	Message length
MSG TYPE	Message type
SIO	Service information octet

Alarm Level

No alarm condition. The message is informational only.

Procedure

1. Verify the point code in the message, and verify the subsystem number as a valid SSN for the network.

2. Add the subsystem number to the EAGLE 5 ISS map tables using the *ent-map* command.

1057 - SCCP rcvd inv SCMG - bad length

Description

SCCP received an SCCP management message (SCMG) that was discarded because of an invalid length indicator.

Example

```
RLGHNCXA21W 00-04-18 19:04:15 EST  EAGLE 35.0.0
0124.1057    CARD 1106  INFO   SCCP rcvd inv SCMG - bad length
             SIO=0a   OPC=   004-031-000  DPC=   000-071-000
             SCMG: MSG TYPE=000   MSG LEN=003
                   AFTPC=   004-219-000   AFTSS=000   MULT=000
             LSN=A1234567
```

Legend

AFTPC	Affected point code (for SCCP messages)
AFTSS	Affected subsystem (identifies the subsystem that failed)
DPC	Destination point code
LSN	Linkset name
MULT	SCCP management message multiplicity indicator
OPC	Origination point code
SCMG	SCCP management message
MSG LEN	Message length
MSG TYPE	Message type
SIO	Service information octet

Alarm Level

No alarm condition. The message is informational only.

Procedure

1. This message indicates an SCCP message was discarded due to an invalid length indicator. No further action is necessary.

1058 - SCCP rcvd inv SCMG - bad msg type

Description

SCCP received an SCCP management message (SCMG) that was discarded because of an invalid message type.

Example

```
RLGHNCXA21W 00-04-18 19:05:37 EST  EAGLE 35.0.0
0128.1058    CARD 1106  INFO   SCCP rcvd inv SCMG - bad msg type
             SIO=0a   OPC=   004-034-000  DPC=   000-000-000
             SCMG: MSG TYPE=000   MSG LEN=003
             AFTPC=   004-219-000   AFTSS=000   MULT=000
             LSN=A1234567
```

Legend

AFTPC	Affected point code (for SCCP messages)
AFTSS	Affected subsystem (identifies the subsystem that failed)
DPC	Destination point code
LSN	Linkset name
MULT	SCCP management message multiplicity indicator
OPC	Origination point code
SCMG	SCCP management message
MSG LEN	Message length
MSG TYPE	Message type
SIO	Service information octet

Alarm Level

No alarm condition. The message is informational only.

Procedure

1. This indicates an SCCP message was discarded due to an invalid message type. No further action is necessary.

1059 - Telnet terminal connection disconnected

Description

Indicates that an established telnet connection on the EAGLE 5 ISS has disconnected.

Example

```
RLGHNCXA21W 00-04-18 18:59:30 EST  EAGLE 35.0.0
0102.1059    CARD 1105,B  INFO   Telnet terminal connection disconnected
             RIPADDR=192.168.57.52
             RIPORT=2336
             LIPADDR=192.168.53.46
             LIPORT=23
```

Legend

LIPADDR	Local IP Address
LIPORT	Local TCP Port Number
RIPADDR	Remote IP Address
RIPORT	Remote TCP Port Number

Alarm Level

No alarm condition. The message is informational only.

Procedure

1. No action necessary.

1060 - Map Screening cannot generate ATIER

Description

This message is generated because the MSU passed the SCCP conversion before the MAP screening and is of a different domain than the OPC of the inbound MSU. Therefore, the MSU is discarded and the Any Time Interrogation error (ATIER) is not generated.

Example

```
RLGHNCXA21W 00-11-18 18:59:23 EST  EAGLE 35.0.0
0018.1060 CARD 1103    INFO Map Screening cannot generate ATIER
             OPC=   001-001-003        DPC=   2-012-1
             CDPA:  NI=1     RI=0   GTI=04 SSNI=0  PCI=1
                    TT=250   NP=04  NAI=010  ADDR=123456789012345678901
                    PC=003-003-003  SSN=005
             CGPA:  NI=1     RI=0   GTI=04 SSNI=0  PCI=1
                    TT=100   NP=07  NAI=012  ADDR=012345678901234567890
                    PC=   001-001-001  SSN=004
             Op-Code=61  Forbidden Param=N/A  Action=Discard
```

Legend

ADDR	Address	CDPA	Called party address
CGPA	Calling party address	GTI	Global title indicator
NAI	Nature of address indicator	NI	Network indicator value
NP	Numbering plan	OPC	Origination point code
PC	Point code	PCI	Protocol control information
RI	Routing indicator	Op-Code	Operation Code
SSN	Subsystem number	SSNI	Subsystem number indicator
TT	Translation type	Param	Parameter

Alarm Level

No alarm condition. The message is informational only.

Procedure

1. The MSU indicated in the message was discarded. No further action is necessary.

1061 - Meas sync not allowed from old version

Description

This UIM is generated when the secondary MCP receives measurements data from a primary MCP that is running an older version of the software. This message indicates that measurements data was discarded by the secondary MCP due to the version mismatch. This problem occurs during a system upgrade to a new release.

Example

```
RLGHNCXA21W 00-04-18 19:09:14 EST  EAGLE 35.0.0
0140.1061  CARD 1201  INFO   Meas sync not allowed from old version
```

Alarm Level

No alarm condition. The message is informational only.

Procedure

1. This UIM should only occur during an upgrade. Complete the upgrade per approved procedure.

1062 - String Data Dump

Description

A screen set was created with too many rows.

Example

```
RLGHNCXA21W 00-04-18 19:05:43 EST  EAGLE 35.0.0
0128.1062    CARD 1101  INFO   String Data Dump
             LSN=A1234567
```

Alarm Level

No alarm condition. The message is informational only.

Procedure

1. This message indicates that the screen set is too large to be loaded. Remove some of the entries (one entry at a time).

2. If the screen set is still too large, use the *rtrv-scrset* command to see if there are any unnecessary entries already in the screen set that can be deleted.

3. Retry adding to the screen set with the *chg-scrset* command. If the message appears again, your screen set is too large. Try a different screen set or change the existing screen set.

1063 - SCCP screen set is too large

Description

The screen set is too large to fit on a LIM or SCCP card and has failed loading.

Example

```
RLGHNCXA21W 00-04-18 19:05:43 EST  EAGLE 35.0.0
0128.1063    CARD 1105  INFO   SCCP screen set is too large
```

Alarm Level

No alarm condition. The message is informational only.

Procedure

1. This message indicates that the screen set is too large to be loaded to a LIM or SCCP. Remove some of the entries (one entry at a time).

2. If the screen set is still too large, use the *rtrv-scrset* command to see if there are any unnecessary entries already in the screen set that can be deleted.

3. Retry adding to the screen set with the *chg-scrset* command. If the message appears again, your screen set is too large. Try a different screen set or change the existing screen set.

1064 - GWS rcvd TFP, AFTPC not in routing tbl

Description

The EAGLE 5 ISS has received a transfer controlled (TCP) for an affected point code (AFTPC) which does not appear in the EAGLE 5 ISS routing tables. The message was discarded by Gateway Screening (GWS).

Example

```
RLGHNCXA21W 00-04-18 19:05:52 EST  EAGLE 35.0.0
0129.1064    CARD 1105,A  INFO   GWS rcvd TFP, AFTPC not in routing tbl
             SIO=b0   OPC=s  004-040-000  DPC=s  000-001-000
             H0H1=41  AFTPC=099-099-003
             SR=scrb   LSN=A1234567
```

Legend

AFTPC	Affected point code (for SCCP messages)
DPC	Destination point code
H0H1	H0/H1 heading code
LSN	Linkset name
OPC	Origination point code
SIO	Service information octet
SR	Screening reference name

Alarm Level

No alarm condition. The message is informational only.

Procedure

1. Verify the affected point code in the message, and verify whether the affected point code is required to be in the EAGLE 5 ISS routing tables.

2. If the affected point code is not required to be in the EAGLE 5 ISS routing tables, no further action is necessary.

3. If the affected point code is required to be in the EAGLE 5 ISS routing table, use the *ent-dstn* command to add the affected point code to the EAGLE 5 ISS routing tables.

1065 - GWS rcvd TFR, AFTPC not in routing tbl

Description

The EAGLE 5 ISS has received a transfer restricted (TFR) for an affected point code (AFTPC) which does not appear in the EAGLE 5 ISS routing tables. The message was discarded by gateway screening (GWS).

Example

```
RLGHNCXA21W 00-04-18 19:05:57 EST  EAGLE 35.0.0
0130.1065    CARD 1201,A  INFO   GWS rcvd TFR, AFTPC not in routing tbl
             SIO=b0   OPC=s  004-041-000  DPC=s  001-000-000
             H0H1=43  AFTPC=099-099-003
             SR=scrb   LSN=A1234567
```

Legend

AFTPC	Affected point code (for SCCP messages)
DPC	Destination point code
H0H1	H0/H1 heading code
LSN	Linkset name
OPC	Origination point code
SIO	Service information octet
SR	Screening reference name

Alarm Level

No alarm condition. The message is informational only.

Procedure

1. Verify the affected point code in the message, and verify whether the affected point code is required to be in the EAGLE 5 ISS routing tables.

2. If the affected point code is not required to be in the EAGLE 5 ISS routing tables, no further action is necessary.

3. If the affected point code is required to be in the EAGLE 5 ISS routing table, use the *ent-dstn* command to add the affected point code to the EAGLE 5 ISS routing tables.

1066 - GWS rcvd TFA, AFTPC not in routing tbl

Description

The EAGLE 5 ISS has received a transfer allowed (TFA) for an affected point code (AFTPC) that does not appear in the EAGLE 5 ISS routing tables. The message was discarded by the gateway screening (GWS) feature.

Example

```
RLGHNCXA21W 00-04-18 19:06:35 EST  EAGLE 35.0.0
0131.1066    CARD 1201,A  INFO   GWS rcvd TFA, AFTPC not in routing tbl
             SIO=b0   OPC=s  004-042-000  DPC=s  002-000-000
             H0H1=45  AFTPC=099-099-003
             SR=scrb   LSN=A1234567
```

Legend

AFTPC	Affected point code (for SCCP messages)
DPC	Destination point code
H0H1	H0/H1 heading code
LSN	Linkset name
OPC	Origination point code
SIO	Service information octet
SR	Screening reference name

Alarm Level

No alarm condition. The message is informational only.

Procedure

1. Verify the affected point code in the message, and verify whether the affected point code is required to be in the EAGLE 5 ISS routing tables.

2. If the affected point code is not required to be in the EAGLE 5 ISS routing tables, no further action is necessary.

3. If the affected point code is required to be in the EAGLE 5 ISS routing table, use the *ent-dstn* command to add the affected point code to the EAGLE 5 ISS routing tables.

1067 - GWS rcvd UPU, AFTPC not in routing tbl

Description

The EAGLE 5 ISS has received a user part unavailable (UPU) for an affected point code (AFTPC) which does not appear in the EAGLE 5 ISS routing tables. The message was discarded by gateway screening (GWS).

Example

```
RLGHNCXA21W 00-04-18 19:06:42 EST  EAGLE 35.0.0
0132.1067    CARD 1201,A  INFO   GWS rcvd UPU, AFTPC not in routing tbl
             SIO=90   OPC=s  004-043-000  DPC=s  002-000-000
             H0H1=A1  AFTPC=099-099-003
             SR=scrb   LSN=A1234567
```

Legend

AFTPC	Affected point code (for SCCP messages)
DPC	Destination point code
H0H1	H0/H1 heading code
LSN	Linkset name
OPC	Origination point code
SIO	Service information octet
SR	Screening reference name

Alarm Level

No alarm condition. The message is informational only.

Procedure

1. Verify the affected point code in the message, and verify whether the affected point code is required to be in the EAGLE 5 ISS routing tables.

2. If the affected point code is not required to be in the EAGLE 5 ISS routing tables, no further action is necessary.

3. If the affected point code is required to be in the EAGLE 5 ISS routing table, use the *ent-dstn* command to add the affected point code to the EAGLE 5 ISS routing tables.

1068 - GWS rcvd RSP, AFTPC not in routing tbl

Description

The EAGLE 5 ISS has received a signaling route set test prohibited message (RSP) for an affected point code (AFTPC) which does not appear in the EAGLE 5 ISS routing tables. The message was discarded by gateway screening (GWS).

Example

```
RLGHNCXA21W 00-04-18 19:06:48 EST  EAGLE 35.0.0
0133.1068    CARD 1201,A  INFO   GWS rcvd RSP, AFTPC not in routing tbl
             SIO=b0   OPC=s  004-044-000  DPC=s  008-010-000
             H0H1=51  AFTPC=099-099-003
             SR=scrb   LSN=A1234567
```

Legend

AFTPC	Affected point code (for SCCP messages)
DPC	Destination point code
H0H1	H0/H1 heading code
LSN	Linkset name
OPC	Origination point code
SIO	Service information octet
SR	Screening reference name

Alarm Level

No alarm condition. The message is informational only.

Procedure

1. Verify the affected point code in the message, and verify whether the affected point code is required to be in the EAGLE 5 ISS routing tables.

2. If the affected point code is not required to be in the EAGLE 5 ISS routing tables, no further action is necessary.

3. If the affected point code is required to be in the EAGLE 5 ISS routing table, use the *ent-dstn* command to add the affected point code to the EAGLE 5 ISS routing tables.

1069 - GWS rcvd RSR, AFTPC not in routing table

Description

The EAGLE 5 ISS has received a signaling route test set restricted (RSR) for an affected point code (AFTPC) which does not appear in the EAGLE 5 ISS routing tables. The message was discarded by gateway screening (GWS).

Example

```
RLGHNCXA21W 00-04-18 19:07:27 EST  EAGLE 35.0.0
0134.1069   CARD 1201,A  INFO   GWS rcvd RSR with AFTPC not in routing tbl
           SIO=b0   OPC=s  004-045-004  DPC=s  002-072-002
           H0H1=52  AFTPC=099-099-003
           SR=scrb   LSN=A1234567
```

Legend

AFTPC	Affected point code (for SCCP messages)
DPC	Destination point code
H0H1	H0/H1 heading code
LSN	Linkset name
OPC	Origination point code
SIO	Service information octet
SR	Screening reference name

Alarm Level

No alarm condition. The message is informational only.

Procedure

1. Verify the affected point code in the message, and verify whether the affected point code is required to be in the EAGLE 5 ISS routing tables.

2. If the affected point code is not required to be in the EAGLE 5 ISS routing tables, no further action is necessary.

3. If the affected point code is required to be in the EAGLE 5 ISS routing table, use the *ent-dstn* command to add the affected point code to the EAGLE 5 ISS routing tables.

1070 - SLTC failure: invalid Point Code (OPC)

Description

The signaling link test control has reported an invalid point code in the signaling link test message (SLTM) received from the far end. The point code for the adjacent signaling point does not match the point code in the adjacent point code field in the linkset table.

Example

```
RLGHNCXA21W 00-04-18 19:08:05 EST  EAGLE 35.0.0
0135.1070    CARD 1201,A  INFO   SLTC failure: invalid Point Code (OPC)
             SIO=0a   OPC=   003-236-000  DPC=   000-071-000
             LSN=A1234567
```

Legend

DPC	Destination point code
LSN	Linkset name
OPC	Origination point code
SIO	Service information octet

Alarm Level

No alarm condition. The message is informational only.

Procedure

1. Enter the following command to display the linkset names and the adjacent point codes:

rtrv-ls

Following is an example of the output:

```
RLGHNCXA03W 00-06-10 11:43:04 EST EAGLE 35.0.0

                              L3T SLT              GWS GWS GWS
LSN          APCA   (SS7)  SCRN  SET SET BEI LST LNKS ACT MES DIS SLSCI NIS
lsa1         240-020-000   none  1   1   no  A   1    off off off no    off
lsa2         240-030-000   none  1   1   no  A   3    on  on  on  yes   off

Link set table is (114 of 255)  45 % FULL
```

2. The adjacent point code should match the adjacent point code in the message (004-046-000, for example). If it does not match, the link is not physically connected to the adjacent node. Determine the correct linkset name and adjacent point code. Use the *ent-ls* command to enter the correct information in the linkset table.

1071 - SLTC failure: invalid SLC

Description

The signaling link test control has reported an invalid signaling link code (SLC) in the signaling link test message (SLTM) received from the far end.

Example

```
RLGHNCXA21W 00-04-18 19:08:13 EST  EAGLE 35.0.0
0136.1071    CARD 1201,A  INFO   SLTC failure: invalid SLC
             ADJ PC=   004-046-000    SLC=02     LEN=0f
             DATA= 01 02 03 04 05 06 07 08 09 11 12 13 14 15
```

Legend

ADJ PC	Adjacent point code
DATA	Information from the upper layers of SCCP management
LEN	Data length
SLC	Signaling link code

Alarm Level

No alarm condition. The message is informational only.

Procedure

1. Contact the far-end to make sure both ends have provisioned the same SLC for the signaling link.

1072 - SLTC failure: no response

Description

The signaling link test control has reported “No Response” received for a signaling link test message (SLTM) sent to the far end.

Example

```
RLGHNCXA21W 00-04-18 19:08:21 EST  EAGLE 35.0.0
0137.1072    CARD 1201,A  INFO   SLTC failure:no response
             ADJ PC=   004-046-000    SLC=02     LEN=0f
             DATA= 01 02 03 04 05 06 07 08 09 11 12 13 14 15
```

Legend

ADJ PC	Adjacent point code
DATA	Information from the upper layers of SCCP management
LEN	Data length
SLC	Signaling link code

Alarm Level

No alarm condition. The message is informational only.

Procedure

1. Contact the far-end to find out why there is no response to the SLTM.

1073 - SLTC failure: bad data pattern

Description

The signaling link test control has detected an invalid data pattern in the signaling link test message (SLTM) received from the far end.

Example

```
RLGHNCXA21W 00-04-18 19:08:28 EST  EAGLE 35.0.0
0138.1073    CARD 1201,A  INFO   SLTC failure:bad data pattern
             ADJ PC=   004-046-000    SLC=02     LEN=0f
             DATA= 01 02 03 04 05 06 07 08 09 11 12 13 14 15
```

Legend

ADJ PC	Adjacent point code
DATA	Information from the upper layers of SCCP management
LEN	Data length
SLC	Signaling link code

Alarm Level

No alarm condition. The message is informational only.

Procedure

1. Contact the far-end and use your company procedures to test the facilities for the signaling link.

1074 - SCCP rcvd inv SCMG - invalid SOR

Description

SCCP received an SCCP management message (SCMG) that was discarded because of an invalid subsystem out of service request (SOR).

Example

```
RLGHNCXA21W 00-04-18 19:04:15 EST  EAGLE 35.0.0
0124.1074    CARD 1106  INFO   SCCP rcvd inv SCMG - invalid SOR
             SIO=0a   OPC=   004-031-000  DPC=   000-071-000
             SCMG:    MSG TYPE=000         MSG LEN=003
                      AFTPC=   004-219-000    AFTSS=000   MULT=000
             LSN=A1234567
```

Legend

AFTPC	Affected point code (for SCCP messages)
AFTSS	Affected subsystem (identifies the subsystem that failed)
DPC	Destination point code
LSN	Linkset name
MULT	SCCP management message multiplicity indicator
OPC	Origination point code
SCMG	SCCP management message
MSG LEN	Message length
MSG TYPE	Message type
SIO	Service information octet

Alarm Level

No alarm condition. The message is informational only.

Procedure

1. Verify the point code in the message, and verify the subsystem number as a valid SSN for the network.

2. Add the subsystem number to the EAGLE 5 ISS map tables using the *ent-map* command.

1075 - MTP: link bypassed SLT phase

Description

The link has aligned and may be brought into service without a successful signaling link test (SLT).

Example

```
RLGHNCXA21W 00-04-18 19:09:14 EST  EAGLE 35.0.0
0140.1075    CARD 1201,A  INFO   MTP: link bypassed SLT phase
```

Alarm Level

No alarm condition. The message is informational only.

Procedure

1. Enter the *rtrv-slk* command with the card location and port shown in this message (for example, card location 1201, port A). Following is an example of the output:

```
tekelecstp 00-02-19 21:17:04 EST EAGLE 35.0.0
rtrv-slk:loc = 1202:port = a
Command entered at terminal #3.

tekelecstp 94-02-19 21:17:04 EST EAGLE 35.0.0

                                      L2T         L1               PCR  PCR
LOC  PORT LSN         SLC TYPE     SET  BPS    MODE TSET  ECM   N1   N2
1201 A    lsa1         0  LIMV35   2    64000  DTE  ---   PCR   ---  3800
```

2. Use the *rtrv-ls* command using the linkset name (lsn) displayed in the output of Step 1. Following is an example of the output:

```
>  rtrv-ls:lsn = lsa1
   tekelecstp 00-06-10 11:43:04 EST EAGLE 35.0.0

                          SCR   L3T  SLT
       LSN       APCA (SS7)   SET   SET  SET BEI  LST LNKS GWSA GWSM GWSD DOMAIN
       lsa1      240-020-000  scr1  1    1   yes  A   4    off  off  off  SS7

                 TFATCABMLQ
                 2
                                      L2T          L1              PCR  PCR
                 LOC   PORT SLC TYPE     SET  BPS    MODE TSET  ECM   N1   N2
                 1201  a    3   LIMV35   2    64000  DTE  ---   BASIC ---  -----
                 1205  b    0   LIMDS0   1    56000  ---  ---   BASIC ---  -----
                   b    1   LIMOCU   1    56000  ---  ---   BASIC ---  -----
                 1211  a    2   LIMDS0   1    56000  ---  ---   BASIC ---  -----
       Link set table is (114 of 255) 45% full.
```

3. Enter the *rtrv-slt* command with the *sltset* parameter and the value shown in the SLTSET column from the output of Step 2 to determine whether the signaling link test message is on or off.

4. If the signaling link test message is off, enter the *chg-slt* command with the *sltset* parameter and the value used in Step 3, and the *enabled=on* parameter.

5. If the signaling link test message is on, enter the *rept-stat-card* command to verify the status of the card that contains the specified signaling link. The status of the card should be IS-NR (In-Service - Normal). If the card is out of service, put it back into service by entering the *rst-card* command.

6. If the fault is not cleared, enter the *rept-stat-slk* command to verify the status of the signaling link. The status of the signaling should be IS-NR (In-Service - Normal). If the signaling link is out of service, enter the *act-slk* command to put the signaling link back into service.

7. If the fault is not cleared, enter the *tst-slk* command specifying the signaling link that generated this message.

8. If the fault is not cleared, call Tekelec Technical Services at the appropriate number.

   Reference: “Customer Care Center” on page 1-13

1076 - SLTC failure: invalid Point Code (DPC)

Description

The signaling link test control (SLTC) has detected an invalid data pattern in the signaling link test message (SLTM) received from the adjacent point code.

Example

```
RLGHNCXA21W 00-04-18 19:09:22 EST  EAGLE 35.0.0
0141.1076    CARD 1201,A  INFO   SLTC failure:invalid Point Code (DPC)
             ADJ PC=   004-046-000   SLC=02     LEN=0f
             DATA= 01 02 03 04 05 06 07 08 09 11 12 13 14 15
```

Legend

ADJ PC	Adjacent point code
DATA	Information from the upper layers of SCCP management
LEN	Data length
SLC	Signaling link code

Alarm Level

No alarm condition. The message is informational only.

Procedure

1. Contact the far-end and use local procedures to test the facilities for the signaling link.

1077 - SLTC failure: failed link

Description

The signaling link test control failed because the link that requires testing has failed.

Example

```
RLGHNCXA21W 00-04-18 19:10:01 EST  EAGLE 35.0.0
0142.1077    CARD 1201,A  INFO   SLTC failure:failed link
             ADJ PC=004-046-000    SLC=02     LEN=0f
             DATA= 01 02 03 04 05 06 07 08 09 11 12 13 14 15
```

Legend

ADJ PC	Adjacent point code
DATA	Information from the upper layers of SCCP management
LEN	Data length
SLC	Signaling link code

Alarm Level

No alarm condition. The message is informational only.

Procedure

1. The link failed before testing could complete. Check for other messages relating to the link failure.

2. If the fault is not cleared, call Tekelec Technical Services at the appropriate number.

   Reference: “Customer Care Center” on page 1-13

1078 - SLTC success: manual test passed

Description

This message is the result of the successful completion of the *tst-slk* command.

Example

```
RLGHNCXA21W 00-04-18 19:10:08 EST  EAGLE 35.0.0
0143.1078    CARD 1201,A  INFO   SLTC success:manual test passed
             ADJ PC=004-046-000    SLC=02     LEN=0f
             DATA= 01 02 03 04 05 06 07 08 09 11 12 13 14 15
```

Legend

ADJ PC	Adjacent point code
DATA	Information from the upper layers of SCCP management
LEN	Data length
SLC	Signaling link code

Alarm Level

No alarm condition. The message is informational only.

Procedure

1. This message indicates successful completion of a signaling link test message. No further action is necessary.

1079 - SLTC aborted: unable to perform test

Description

The *tst-slk* command was entered and the specified signaling link was not in the IS-NR (In-Service - Normal) state. For the *tst-slk* command to be used, the specified signaling link must be in the IS-NR state.

Example

```
RLGHNCXA21W 00-04-18 19:10:16 EST  EAGLE 35.0.0
0144.1079    CARD 1201,A  INFO   SLTC aborted:unable to perform test
             ADJ PC=004-046-000    SLC=02     LEN=0f
             DATA= 01 02 03 04 05 06 07 08 09 11 12 13 14 15
```

Legend

ADJ PC	Adjacent point code
DATA	Information from the upper layers of SCCP management
LEN	Data length
SLC	Signaling link code

Alarm Level

No alarm condition. The message is informational only.

Procedure

1. Enter the *rept-stat-slk* command to verify the status of the signaling links.

2. Re-enter the *tst-slk* command specifying a signaling link that is in the IS-NR state.

1080 - disk measurement status unreadable

Description

The active MASP could not determine the measurement collection status so that the measurements task could perform routine polling and measurement collection. If the measurement collection status cannot be determined, the routine polling and measurement collection tasks cannot be performed.

Example

```
RLGHNCXA21W 00-04-18 19:10:54 EST  EAGLE 35.0.0
0145.1080    CARD 1116  INFO   disk measurement status unreadable
```

Alarm Level

No alarm condition. The message is informational only.

Procedure

1. Enter the *rept-meas* command. If the *rept-meas* command fails, a system problem is the likely cause. If any messages are generated with the *rept-meas* command failure, take the appropriate action for that message. If no messages are generated, call Tekelec Technical Services at the appropriate number.

Reference: “Customer Care Center” on page 1-13

2. If the *rept-meas* command is rejected with a system busy message, the disk is reserved by another command (for example, *copy-disk*). Check to see if another command is running (*copy-disk* or a *chg-db* command).

3. If the fault is not cleared, enter the *rept-stat-db* command to determine whether the active database is incoherent.

The following is an example of the output from an incoherent database.

```
oflnmoxa11w 00-10-08 15:56:40 CDT EAGLE 35.0.0
rept-stat-db
Command entered at terminal #4.
;

oflnmoxa11w 00-10-08 15:56:40 CDT EAGLE 35.0.0
DATABASE STATUS: >> NOT OK <<
        TDM 1114 ( STDBY)                TDM 1116 ( ACTV )
         C   LEVEL    TIME LAST BACKUP     C   LEVEL    TIME LAST BACKUP
         - -------- ---------------------  - -------- ---------------------
FD BKUP  Y   342256 00-10-07 00:40:29 CDT  Y   342256 00-10-07 00:40:29 CDT
FD CRNT  N   342374 INCOHERENT             Y   342375
        MDAL 1117
         - --------
```

4. Enter the appropriate *chg-db* command to restore the coherency of the active database. See the *Database Administration* manual for information about restoring the database.

5. If the fault is not cleared, the measurement control table may have been corrupted. Call Tekelec Technical Services at at the appropriate number.

   Reference: “Customer Care Center” on page 1-13

1081 - MTP: Changeback T5 timeout

Description

When a link changes back, the EAGLE 5 ISS sends up to six changeback declaration messages and starts the T4 timer. The EAGLE 5 ISS waits for a changeback acknowledgment message for each of these declarations. If the T4 timer expires before the EAGLE 5 ISS receives an acknowledgment message, the EAGLE 5 ISS sends the changeback declaration message again and starts the T5 timer. If the T5 timer expires before the EAGLE 5 ISS receives an acknowledgment message, this message is generated and the EAGLE 5 ISS restarts traffic on the link.

Example

```
RLGHNCXA21W 00-04-18 19:11:03 EST  EAGLE 35.0.0
0146.1081    CARD 1105, A  INFO   MTP: Changeback T5 timeout
```

Alarm Level

No alarm condition. The message is informational only.

Procedure

1. The system restarts traffic and no further action is necessary.

1082 - Amem single bit error report

Description

This message indicates that a GPSM-II or TSM card encountered a single bit dynamic ram error. This message gives the user a record of single bit errors for the last 24 hours.

Example

```
RLGHNCXA21W 00-04-18 19:12:00 EST  EAGLE 35.0.0
0147.1082    CARD 1101      INFO   Amem single bit error report
           Any Errors     :  YES   current hour-------v
           24 Hour History:  NNNYNN NNNNNN NNNNYN NYNNNY
```

Alarm Level

No alarm condition. The message is informational only.

Procedure

1. There is no immediate action needed, but the message indicates that the error was encountered and corrected. If many errors are reported then the card may be beginning to fail and should be targeted for replacement in the future.

1083 - REPT COND: system alive

Description

This message is a periodic system message indicating that the system is alive.

Example

```
RLGHNCXA21W 00-04-18 19:12:00 EST  EAGLE 35.0.0
0147.1083    SYSTEM      INFO   REPT COND: system alive
```

Alarm Level

No alarm condition. The message is informational only.

Procedure

1. No action is necessary.

1084 - GWS MSU discarded by redirect function

Description

This message indicates that an MSU has been discarded rather than redirected to the SCP as part of the Database Transport Access (DTA) feature.

Example

```
RLGHNCXA21W 00-04-18 19:12:00 EST  EAGLE 35.0.0
0003.1084    CARD 1205,A   INFO   GWS MSU discarded by redirect function
             SIO=01           OPC= s-003-237-002  DPC= s-006-006-000
             SR=scrb
             LSN=A1234567
```

NOTE: Four outputs are possible. The Legend includes abbreviations found in all variations.

Legend

ADDR	Address
AFTPC	Affected point code (for SCCP messages)
AFTSS	Affected subsystem (identifies the subsystem that failed)
AI	Address Indicator
CDPA	Called party address
CGPA	Calling party address
DATA	Information from the upper layers of SCCP management
DPC	Destination point code
H0H1	H0/H1 heading code
LSN	Linkset name
MULT	SCCP management message multiplicity indicator
OPC	Origination point code
PC	Point code
SCCP MT	SCCP message type
SCMG	SCCP management message
SIO	Service information octet
SR	Screening reference name
SSN	Subsystem number
TT	Translation type
TYPE	SCCP management message type

Alarm Level

No alarm condition. The message is informational only.

Procedure

1. Check to see if the redirect function is disabled by entering the following:

rtrv-gws-redirect

2. If the enabled parameter is set to OFF as in the following output, the redirect function needs to be enabled.

```
RLGHNCXA03W 00-02-10 11:43:04 EST EAGLE 35.0.0
ENABLED DPC         RI     SSN    TT      GTA
off     001-030-001 GT     10     25      1800833
```

3. Enter the following command to enable the redirect function:

chg-gws-redirect:enabled=on

1085 - GWS MSU too large to be redirected

Description

This message indicates that the system tried to encapsulate an MSU for redirection to an SCP (as part of the Database Transport Access feature).

The DTA feature encapsulates the entire data packet including level 2 MTP. Because the DTA feature requires approximately 24 octets, the original packet can contain a maximum of about 248 octets of "user data." If the size of the data is larger, the MSU cannot be redirected and is routed to its original destination.

Example

```
RLGHNCXA21W 00-04-18 19:12:00 EST  EAGLE 35.0.0
0003.1085    CARD 1205,A     INFO   GWS MSU too large to be redirected
             SIO=01          OPC= s-003-237-002  DPC= s-006-006-000
             SR=scrb
             LSN=A1234567
```

NOTE: Four outputs are possible. The Legend includes abbreviations found in all variations.

Legend

ADDR	Address
AFTPC	Affected point code (for SCCP messages)
AFTSS	Affected subsystem (identifies the subsystem that failed)
AI	Address Indicator
CDPA	Called party address
CGPA	Calling party address
DATA	Information from the upper layers of SCCP management
DPC	Destination point code
H0H1	H0/H1 heading code
LSN	Linkset name
MULT	SCCP management message multiplicity indicator
OPC	Origination point code
PC	Point code
SCCP MT	SCCP message type
SCMG	SCCP management message
SIO	Service information octet
SR	Screening reference name
SSN	Subsystem number
TT	Translation type
TYPE	SCCP management message type

Alarm Level

No alarm condition. The message is informational only.

Procedure

1. If MSUs are frequently discarded, there may be a problem on the origination end. To determine the number of MSUs that are discarded because the MSU is too large to be encapsulated, enter the following command:

   rept-meas:type=systot:enttype=stp:period=last

2. Check the DTAMSULOST report in the output message. If the number of discarded MSUs is low, no further action is necessary. If large quantities are MSUs are lost, the originating node may need to be reconfigured.

1086 - LFS test terminated with OAM switchover

Description

The link fault sectionalization (LFS) test terminated when the OAM switched over.

Example

```
RLGHNCXA21W 00-04-18 19:11:03 EST  EAGLE 35.0.0
0146.1086    CARD 1115    INFO   LFS test terminated with OAM switchover
```

Alarm Level

No alarm condition. The message is informational only.

Procedure

1. No action is necessary.

1087 - MTP RSTRT rcvd unexpected user traffic

Description

This message indicates the system encountered traffic during the MTP Restart process.

Example

```
RLGHNCXA21W 00-04-18 19:12:00 EST  EAGLE 35.0.0
0147.1087    CARD 1101    INFO   MTP RSTRT rcvd unexpected user traffic
             Report Date:00-03-30      Time:  16:27:19     :
```

Alarm Level

No alarm condition. The message is informational only.

Procedure

1. There is no immediate action needed, but the message indicates that the error was encountered.

1088 - REPT-MTP-RSTRT MTP Restart started

Description

This message indicates that a full MTP Restart has begun.

Example

```
RLGHNCXA21W 00-04-18 19:12:00 EST  EAGLE 35.0.0
0147.1088    CARD 1101     INFO   REPT-MTP-RSTRT MTP Restart started
             Report Date:00-03-30      Time:  16:27:19     :
```

Alarm Level

No alarm condition. The message is informational only.

Procedure

1. There is no immediate action needed, but the message indicates that MTP Restart has begun.

1089 - RCVRY-MTP-RSTRT MTP Restart completed

Description

This message indicates a full MTP Restart is complete.

Example

```
RLGHNCXA21W 00-04-18 19:12:00 EST  EAGLE 35.0.0
0147.1089    CARD 1101     INFO   RCVRY-MTP-RSTRT MTP Restart completed
             Report Date:00-03-30      Time:  16:27:19     :
```

Alarm Level

No alarm condition. The message is informational only.

Procedure

1. There is no immediate action needed, but the message indicates that MTP Restart is complete.

1090 - ITU GWY:CPC conversion failure

Description

This message indicates a protocol conversion failure. There are three possible reasons for the conversion failure.

- The point code was not in the database.
- The appropriate point code type was unavailable. There is no true point code or alias point code that matches the CPC.
- The database is corrupted. The master database and the card database must be synchronized.

Example

```
station5 00-04-18 19:12:00 EST  EAGLE 35.0.0
0010.1090    CARD 1205,B  INFO  ITU GWY: CPC conversion failure
             SIO=0a   OPC=   3-236-1  DPC=1-014-2
             CPC=3-095-6
             LSN=A1234567890
```

Legend

CPC	Capability point code
DPC	Destination point code
LSN	Linkset name
OPC	Origination point code
SIO	Service information octet

Alarm Level

No alarm condition. The message is informational only.

Procedure

1. Check the database to make sure the card database is synchronized with the master database. Enter the *rept-stat-db:display=except* command. If the databases are not synchronized, reload the card data by initializing the card. If the databases are synchronized, go to Step 2.

2. Enter the *rtrv-dstn:dpc* command. If the *rtrv-dstn* command fails, the point code is undefined or the destination point code is an alias and not a true point code.

3. To verify that the point code is an alias, enter the *rtrv-dstn:alias* command. If the command succeeds, you must provision the database with the true point code using the *chg-dstn:dpc=xxx:alias=yyy* command.

---

4. If the point code is not an alias, you must define the point code using the *ent-dstn:dpci=xxx:aliasi=yyy* command.

1091 - ITU GWY:OPC conversion failure

Description

This message indicates a protocol conversion failure. There are three possible reasons for the conversion failure.

- The point code is not in the database.
- The appropriate point code type was unavailable. There is no true point code or alias point code that matches the OPC.
- The database is corrupted.

Example

```
station5 00-04-18 19:12:00 EST  EAGLE 35.0.0
0010.1091    CARD 1205,B  INFO  ITU GWY: OPC conversion failure
             SIO=0a   OPC=   3-236-1  DPC=   1-014-2
             LSN=A1234567890
```

Legend

DPC	Destination point code
LSN	Linkset name
OPC	Origination point code
SIO	Service information octet

Alarm Level

No alarm condition. The message is informational only.

Procedure

1. Check the database to make sure the card database is synchronized with the master database. Enter the *rept-stat-db:display=except* command. If the databases are not synchronized, reload the card data by initializing the card. If the databases are synchronized, go to Step 2.

2. Enter the *rtrv-dstn:dpc* command. If the *rtrv-dstn* command fails, the point code is undefined or the destination point code is an alias and not a true point code.

3. To verify that the point code is an alias, enter the *rtrv-dstn:alias* command. If the command succeeds, you must provision the database with the true point code using the *chg-dstn:dpc=xxx:alias=yyy* command.

---

4. If the point code is not an alias, you must define the point code using the *ent-dstn:dpci=xxx:aliasi=yyy* command.

1092 - ITU GWY:HOH1 conversion failure

Description

This message occurs when there is an ANSI message with no ITU equivalent. The ANSI messages with no ITU equivalent are as follows:

Message	H0/H1 Code (Hex)
Transfer Restricted (TFR) when generated by an ITU National network	43
Transfer-Cluster Restricted (TCR)	44
Transfer-Cluster Allowed (TCA)	46
Transfer-Cluster Prohibit Signal (TCP)	42
Signaling-Route-Set-Test-Cluster-Prohibit (RCP)	53
Signaling-Route-Set-Test Cluster-Restrict (RCR)	54
Traffic-Restart-Waiting (TRW)	72

Example

```
station5 00-04-18 19:12:00 EST  EAGLE 35.0.0
0010.1092    CARD 1205,B  INFO  ITU GWY: H0H1 conversion failure
             SIO=08   OPC=    003-235-001  DPC=    006-006-000
             H0H1=42
             LSN=A1234567890
```

Legend

DPC	Destination point code
H0H1	H0/H1 heading code
LSN	Linkset name
OPC	Origination point code
SIO	Service information octet

Alarm Level

No alarm condition. The message is informational only.

Procedure

1. There is no immediate action needed, but the message indicates that the error was encountered.

1093 - ITU GWY:rcvd msg type cannot convert

Description

This message indicates the STP received a message type that has no equivalent in the opposite protocol. The following is the list of message types that have no equivalents and are discarded.

Message Type	Code
Confusion Message (CNF)	2F
Connect Message (CONN)	07
Continuity Test Message (COT)	05
Continuity Check Request Message (CCR)	11
Information Message (INF)	04
Information Request Message (INR)	03
Loop Back Acknowledge Message (LPA)	24
Overload Message (OLM)	30

Example

```
station5 00-04-18 19:12:00 EST  EAGLE 35.0.0
0110.1093    CARD 1205,B  INFO   ITU GWY:rcvd msg type cannot convert
             SIO=0e  OPC=   4-013-1      DPC=   1-003-0
             MSG TYPE=07
             LSN=A1234567890
```

Legend

DPC	Destination point code
LSN	Linkset name
OPC	Origination point code
MSG TYPE	Message type (for example, connection request, connection confirm, connection refused)
SIO	Service information octet

Alarm Level

No alarm condition. The message is informational only.

Procedure

1. There is no immediate action needed, but the message indicates that the error was encountered.

1094 - ITU GWY:Invalid ISUP msg structure

Description

This message indicates that an ISUP parameter or pointer to a parameter was invalid.

Example

```
station5 00-04-18 19:12:00 EST  EAGLE 35.0.0
0110.1094    CARD 1205,B  INFO   ITU GWY:Invalid ISUP msg structure
             SIO=0e  OPC=   4-013-1      DPC=   1-003-0
             MSG TYPE=07
             LSN=A1234567890
```

Legend

DPC	Destination point code
LSN	Linkset name
OPC	Origination point code
MSG TYPE	Message type (for example, connection request, connection confirm, connection refused)
SIO	Service information octet

Alarm Level

No alarm condition. The message is informational only.

Procedure

1. There is no immediate action needed, but the message indicates that the error was encountered.

1095 - ITU GWY:GRS buffer full

Description

This message indicates the circuit group reset (GRS) buffer is full.

Example

```
station5 00-04-18 19:12:00 EST  EAGLE 35.0.0
0110.1095    CARD 1205,B  INFO   ITU GWY:GRS buffer full
```

Alarm Level

No alarm condition. The message is informational only.

Procedure

1. There is no immediate action needed, but the message indicates that the error was encountered.

1096 - ITU GWY:RSC buffer full

Description

This message indicates the reset circuit (RSC) buffer is full.

Example

```
station5 00-04-18 19:12:00 EST  EAGLE 35.0.0
0110.1096    CARD 1205,B  INFO   ITU GWY: RSC buffer full
```

Alarm Level

No alarm condition. The message is informational only.

Procedure

1. There is no immediate action needed, but the message indicates that the error was encountered.

1097 - ITU GWY:CGB buffer full

Description

This message indicates the circuit group blocking (CGB) buffer is full.

Example

```
station5 00-04-18 19:12:00 EST  EAGLE 35.0.0
0110.1097    CARD 1205,B  INFO   ITU GWY: CGB buffer full
```

Alarm Level

No alarm condition. The message is informational only.

Procedure

1. There is no immediate action needed, but the message indicates that the error was encountered.

1098 - Unexpected disk access timeout

Description

This message is used to determine whether there are problems with the disk access system.

Example

```
station5 00-04-18 19:12:00 EST  EAGLE 35.0.0
0110.1098    CARD 1113    INFO   Unexpected disk access timeout
```

Alarm Level

No alarm condition. The message is informational only.

Procedure

1. If the target disk is the same CARD that corresponds to the GPSM-II, there is a software timing issue that needs to be addressed. If the target disk is the mate GPSM-II/TDM or the removable and access is physically impossible, no action is necessary.

1099 - String Data Dump

Description

This is a generic string UIM. This OAP related string falls under two categories.

Example

The strings that are generated in response to OAP conditions are as follows:

```
CAUTION: OAP Configuration changed
CAUTION: Invalid SEAS X25 Link 2 status
CAUTION: Invalid SEAS X25 Link 1 status
Change in PVC number is detected
```

The OAP generated strings are as follows:

```
ILLEGAL - EMS Agent status value
ILLEGAL _ Q3 Association value
LSMS Resynchronization in progress
Q3 association is Down
Q3 association is Up
Q3 association is Not Configured
EMS Agent is not running
MS Agent is running
Filesystem threshold %s %d
x25 link %d Down
x25 ln %d pvc %02d pvc st %01d ual st %01d
Out of seq code old %c new %c in msg id %d
Out of seq code old new %c in msg id %d
Unexpected seq code %c for MNT msgs
Unexpected length %d
Unexpected version number %s
Unexpected id %d
Unexpected seq code %c
Unexpected Priority %d
Incomplete message
Missing ETX
Extraneous %d bytes received
```

Alarm Level

No alarm condition. The message is informational only.

Procedure

1. No action necessary.

1100 - GWS rcvd H0/H1 that is not allowed

Description

This message indicates the STP has received an H0/H1 that is not allowed.

Example

```
RLGHNCXA21W 00-04-18 18:59:58 EST  EAGLE 35.0.0
0105.1100    CARD 1201,A  INFO   GWS rcvd H0H1 that is not allowed
             SIO=02   OPC= s-009-009-009  DPC= s-006-006-006
             H0H1=01    AFTPC=255-009-009
             SR=osp3    LSN=A1234567
```

NOTE: Four outputs are possible. The Legend includes abbreviations found in all variations.

Legend

ADDR	Address
AFTPC	Affected point code (for SCCP messages)
AFTSS	Affected subsystem (identifies the subsystem that failed)
AI	Address Indicator
CDPA	Called party address
CGPA	Calling party address
DATA	Information from the upper layers of SCCP management
DPC	Destination point code
H0H1	H0/H1 heading code
LSN	Linkset name
MULT	SCCP management message multiplicity indicator
OPC	Origination point code
PC	Point code
SCCP MT	SCCP message type
SCMG	SCCP management message
SIO	Service information octet
SR	Screening reference name
SSN	Subsystem number
TT	Translation type
TYPE	SCCP management message type

Alarm Level

No alarm condition. The message is informational only.

Procedure

1. There is no immediate action needed, but the message indicates that the error was encountered and corrected.

1102 - Invalid Length for Map IMEI Parameter

Description

This message indicates that the EIR subsystem received a Check-IMEI message in which the Map IMEI parameter had an invalid length.

Example

```
RLGHNCXA21W 00-04-18 19:00:11 EST  EAGLE 35.0.0
0107.1102    CARD 1103,A1  INFO  Invalid Length for Map IMEI Parameter
             SIO=03   OPC=   003-252-000  DPC=   000-071-000
             CDPA:   AI=10   SSN=05   TT=250
                     ADDR=ABCDEF1234567890ABCDE
             CGPA:   AI=12   PC=   001-001-001    SSN=002
             DATA=3a e2 38 c7 04 56 04 72 e0 e8 30 e9
                  2e cf 01 00 d0 02 83 01 f2 25 aa 0b
                  84 09 01 00 11 0a 19 49
             LSN=A1234567
```

Legend

SIO	Service information octet	OPC	Origination point code
DPC	Destination point code	CDPA	Called party address
AI	Address Indicator	SSN	Subsystem number
TT	Translation type	ADDR	Address
CGPA	Calling party address	PC	Point code
DATA	Hex dump of TCAP part of MSU	LSN	Linkset name

Alarm Level

No alarm condition. The message is informational only.

Procedure

1. No action at the EAGLE 5 ISS is necessary.

1103 - LSS:No Map IMEI Parameter present

Description

This message indicates that the EIR subsystem received a Check-IMEI message in which the Map IMEI parameter is not present.

Example

```
RLGHNCXA21W 00-04-18 19:00:11 EST  EAGLE 35.0.0
0107.1103    CARD 1103,A1  INFO  LSS:No Map IMEI Parameter present
             SIO=03   OPC=   003-252-000  DPC=   000-071-000
             CDPA:   AI=10   SSN=05   TT=250
                     ADDR=ABCDEF1234567890ABCDE
             CGPA:   AI=12   PC=001-001-001    SSN=002
             DATA=3a e2 38 c7 04 56 04 72 e0 e8 30 e9
                  2e cf 01 00 d0 02 83 01 f2 25 aa 0b
                  84 09 01 00 11 0a 19 49
             LSN=A1234567
```

Legend

SIO	Service information octet	OPC	Origination point code
DPC	Destination point code	CDPA	Called party address
AI	Address Indicator	SSN	Subsystem number
TT	Translation type	ADDR	Address
CGPA	Calling party address	PC	Point code
DATA	Hex dump of TCAP part of MSU	LSN	Linkset name

Alarm Level

No alarm condition. The message is informational only.

Procedure

1. No action at the EAGLE 5 ISS is necessary.

1104 - IP Connection Failed

Description

Reports that either an attempt to connect to an IP server failed, or that a client socket failed to establish a connection with the system.

Example

```
RLGHNCXA03W 99-04-10 16:28:08 EST EAGLE 35.0.0
0003.1104    DCM 1213,A    IP Connection Failed
             RIPADDR = 123.123.123.123
             RPORT = 1314
             LIPADDR = 123.123.123.124
             LPORT = 1315
             SNAME=LONGSOCKETNAME1
             Report Date: 02-04-10  Time: 16:27:19
```

Alarm Level

No alarm condition. The message is informational only.

Procedure

1. No action necessary.

Reports on connection status can be obtained for each DCM card with the following commands:

pass:loc=xxxx:cmd="connmgr -l" displays the connection manager event log.

pass:loc=xxxx:cmd="connmgr -c" displays socket client data.

pass:loc=xxxx:cmd="connmgr -s" displays socket server data.

1105 - REPT EVT:IMT GPL reloading

Description

This message indicates the IMT software download procedure is initiated. This is the first message that the system displays.

Example

```
RLGHNCXA21W 00-04-18 18:59:58 EST  EAGLE 35.0.0
0105.1105    SYSTEM     INFO   REPT EVT:IMT GPL reloading
             cards     loaded  :  1 of 25
```

Alarm Level

No alarm condition. The message is informational only.

Procedure

1. No action is necessary.

1106 - REPT COND:IMT GPL reloading

Description

This message displays the progress of the IMT software downloading procedure.

Example

```
RLGHNCXA21W 00-04-18 18:59:58 EST  EAGLE 35.0.0
0105.1106    SYSTEM     INFO   REPT COND:IMT GPL reloading
             cards     loaded  :  10 of 25
```

Alarm Level

No alarm condition. The message is informational only.

Procedure

1. No action is necessary.

1107 - SCCP XUDT (S) msg: Hop Counter violation

Description

This message indicates that the incoming MSU has a Hop counter value of zero or greater than 15 and the *F* bit in the segmentation parameter is not set. A XUDTS error response is generated and sent to the originating node. The message is discarded.

Example

```
RLGHNCXA21W 00-04-18 19:02:05 EST  EAGLE 35.0.0
0112.1107  CARD 1103,A1  INFO  SCCP XUDT (S) msg: Hop Counter violation
           SIO=03   OPC=   001-001-001     DPC=   002-002-002
           SCCP MSG TYPE=04
           CDPA:  NI=1  RI=0    GTI=04  SSNI=1  PCI=1
                  TT=250   NP=04  NAI=010  ADDR=123456789012345678901
                  PC=   003-003-003  SSN=005
           CGPA:  NI=1  RI=0    GTI=04  SSNI=1  PCI=1
                  TT=100   NP=07  NAI=012  ADDR=012345678901234567890
                  PC=   001-001-001  SSN=004
           LSN=A1234567  GTTSET=3  203 46
```

Legend

ADDR	Address	CDPA	Called party address
CGPA	Calling party address	GTI	Global title indicator
GTTSET	GTT Set Index	LSN	Linkset name
NAI	Nature of address indicator	NI	Network indicator value
NP	Numbering plan	PC	Point code
PCI	Point code indicator	RI	Routing indicator
SSN	Subsystem number	SSNI	Subsystem number indicator
TT	Translation type		
TRANSLATED PC	Translated point code		
TRANSLATED SS	Translated subsystem		

NOTE: If Global Title Translation is found, the GTTSET in which the translation is found appears. If Global Title Translation is not found, the GTTSET does not display.

Alarm Level

No alarm condition. The message is informational only.

Procedure

1. The sender of the discarded message is using an invalid message format. If there is only one occurrence, no action is necessary. However, if the condition continues, there

may be a problem at the node that is sending the invalid message. Contact that node and inform them of the problem.

1108 - SCCP XUDT (S) msg: inv opt portion len

Description

This message indicates that the incoming MSU has an invalid length in the optional portion (optional parameter length exceeding the MSU length or no end of optional parameters octet).The message is discarded.

Example

```
RLGHNCXA21W 00-04-18 19:02:05 EST  EAGLE 35.0.0
0112.1108  CARD 1103,A1  INFO  SCCP XUDT (S) msg: inv opt portion len
           SIO=03   OPC=   001-001-001     DPC=   002-002-002
           SCCP MSG TYPE=04
           CDPA:  NI=1  RI=0    GTI=04  SSNI=1  PCI=1
                  TT=250   NP=04  NAI=010  ADDR=123456789012345678901
                  PC=   003-003-003  SSN=005
           CGPA:  NI=1  RI=0    GTI=04  SSNI=1  PCI=1
                  TT=100   NP=07  NAI=012  ADDR=012345678901234567890
                  PC=   001-001-001  SSN=004
           LSN=A1234567  GTTSET=3  203 46
```

Legend

ADDR	Address	CDPA	Called party address
CGPA	Calling party address	GTI	Global title indicator
GTTSET	GTT Set Index	LSN	Linkset name
NAI	Nature of address indicator	NI	Network indicator value
NP	Numbering plan	PC	Point code
PCI	Point code indicator	RI	Routing indicator
SSN	Subsystem number	SSNI	Subsystem number indicator
TT	Translation type		
TRANSLATED PC	Translated point code		
TRANSLATED SS	Translated subsystem		

NOTE: If Global Title Translation is found, the GTTSET in which the translation is found appears. If Global Title Translation is not found, the GTTSET does not display.

Alarm Level

No alarm condition. The message is informational only.

Procedure

1. This message indicates an SCCP message was discarded due to an invalid length. No further action is necessary.

1109 - SCCP XUDT(S) msg: inv segmentation parm

Description

This message indicates that the length of the optional segmentation parameter is not equal to 6. The length of the segmentation parameter must be equal to 6. The message is discarded.

Example

```
RLGHNCXA21W 00-04-18 19:02:05 EST  EAGLE 35.0.0
0112.1109  CARD 1103,A1  INFO  SCCP XUDT(S) msg: inv segmentation parm
           SIO=03   OPC=   001-001-001     DPC=   002-002-002
           SCCP MSG TYPE=04
           CDPA:  NI=1  RI=0    GTI=04  SSNI=1  PCI=1
                  TT=250   NP=04  NAI=010  ADDR=123456789012345678901
                  PC=   003-003-003  SSN=005
           CGPA:  NI=1  RI=0    GTI=04  SSNI=1  PCI=1
                  TT=100   NP=07  NAI=012  ADDR=012345678901234567890
                  PC=   001-001-001  SSN=004
           LSN=A1234567  GTTSET=3  203 46
```

Legend

ADDR	Address	CDPA	Called party address
CGPA	Calling party address	GTI	Global title indicator
GTTSET	GTT Set Index	LSN	Linkset name
NAI	Nature of address indicator	NI	Network indicator value
NP	Numbering plan	PC	Point code
PCI	Point code indicator	RI	Routing indicator
SSN	Subsystem number	SSNI	Subsystem number indicator
TT	Translation type		
TRANSLATED PC	Translated point code		
TRANSLATED SS	Translated subsystem		

NOTE: If Global Title Translation is found, the GTTSET in which the translation is found appears. If Global Title Translation is not found, the GTTSET does not display.

Alarm Level

No alarm condition. The message is informational only.

Procedure

1. This message indicates an SCCP message was discarded due to an invalid segmentation parameter. No further action is necessary.

1110 - GWS rcvd AFTPC that is not allowed

Description

This indicates that a message was received by a gateway link and failed DESTFLD screening because of an affected point code value in the message.

Example

```
RLGHNCXA21W 00-02-07 11:02:30 EST  EAGLE 35.0.0
0100.1110    CARD 1105,B  INFO   GWS rcvd AFTPC that is not allowed
             SIO=0a   OPC= s-003-243-000  DPC= s-000-024-000
             H0H1=41   AFTPC=099-099-003
             SR=osp3    LSN=A1234567
```

Legend

AFTPC	Affected point code (for SCCP messages)
DPC	Destination point code
H0H1	H0/H1 heading code
LSN	Linkset name
OPC	Origination point code
SIO	Service information octet
SR	Screening reference name

Alarm Level

No alarm condition. The message is informational only.

Procedure

1. Verify the affected point code in the message, and verify whether the affected point code is required to be in the EAGLE 5 ISS routing tables.

2. If the affected point code is not required to be in the EAGLE 5 ISS routing tables, no further action is necessary.

3. If the affected point code is required to be in the EAGLE 5 ISS routing table, use the *ent-dstn* command to add the affected point code to the EAGLE 5 ISS routing tables.

1111 - GWS rcvd TCA, AFTPC not in routing tbl

Description

This indicates that a TCA message was received by a gateway link and failed DESTFLD screening because of an affected point code value in the message.

Example

```
RLGHNCXA21W 00-02-07 11:02:30 EST  EAGLE 35.0.0
0100.1111    CARD 1105,B  INFO   GWS rcvd TCA, AFTPC not in routing tbl
             SIO=0a   OPC= s-003-243-000  DPC= s-000-024-000
             H0H1=46   AFTPC=099-099-003
             SR=osp3    LSN=A1234567
```

Legend

AFTPC	Affected point code (for SCCP messages)
DPC	Destination point code
H0H1	H0/H1 heading code
LSN	Linkset name
OPC	Origination point code
SIO	Service information octet
SR	Screening reference name

Alarm Level

No alarm condition. The message is informational only.

Procedure

1. Verify the affected point code in the message, and verify whether the affected point code is required to be in the EAGLE 5 ISS routing tables.

2. If the affected point code is not required to be in the EAGLE 5 ISS routing tables, no further action is necessary.

3. If the affected point code is required to be in the EAGLE 5 ISS routing table, use the *ent-dstn* command to add the affected point code to the EAGLE 5 ISS routing tables.

1112 - GWS rcvd TCR, AFTPC not in routing tbl

Description

This indicates that a TCR message was received by a gateway link and failed DESTFLD screening because of an affected point code value in the message.

Example

```
RLGHNCXA21W 00-02-07 11:02:30 EST  EAGLE 35.0.0
0100.1112    CARD 1105,B  INFO   GWS rcvd TCR, AFTPC not in routing tbl
             SIO=0a   OPC= s-003-243-000  DPC= s-000-024-000
             H0H1=44   AFTPC=099-099-003
             SR=osp3    LSN=A1234567
```

Legend

AFTPC	Affected point code (for SCCP messages)
DPC	Destination point code
H0H1	H0/H1 heading code
LSN	Linkset name
OPC	Origination point code
SIO	Service information octet
SR	Screening reference name

Alarm Level

No alarm condition. The message is informational only.

Procedure

1. Verify the affected point code in the message, and verify whether the affected point code is required to be in the EAGLE 5 ISS routing tables.

2. If the affected point code is not required to be in the EAGLE 5 ISS routing tables, no further action is necessary.

3. If the affected point code is required to be in the EAGLE 5 ISS routing table, use the *ent-dstn* command to add the affected point code to the EAGLE 5 ISS routing tables.

1113 - GWS rcvd TCP, AFTPC not in routing tbl

Description

This indicates that a TCP message was received by a gateway link and failed DESTFLD screening because of an affected point code value in the message.

Example

```
RLGHNCXA21W 00-02-07 11:02:30 EST  EAGLE 35.0.0
0100.1113    CARD 1105,B  INFO   GWS rcvd TCP, AFTPC not in routing tbl
             SIO=0a   OPC= s-003-243-000  DPC= s-000-024-000
             H0H1=42   AFTPC=099-099-003
             SR=osp3    LSN=A1234567
```

Legend

AFTPC	Affected point code (for SCCP messages)
DPC	Destination point code
H0H1	H0/H1 heading code
LSN	Linkset name
OPC	Origination point code
SIO	Service information octet
SR	Screening reference name

Alarm Level

No alarm condition. The message is informational only.

Procedure

1. Verify the affected point code in the message, and verify whether the affected point code is required to be in the EAGLE 5 ISS routing tables.

2. If the affected point code is not required to be in the EAGLE 5 ISS routing tables, no further action is necessary.

3. If the affected point code is required to be in the EAGLE 5 ISS routing table, use the *ent-dstn* command to add the affected point code to the EAGLE 5 ISS routing tables.

1114 - Database BACKUP started

Description

A local database backup is beginning. This UIM follows the issue of the *chg-db:action=backup* command.

Example

```
RLGHNCXA21W 00-06-18 19:12:00 EST  EAGLE 35.0.0
0147.1114    CARD 1201,A  INFO   Database BACKUP started
```

Alarm Level

No alarm condition. The message is informational only.

Procedure

1. No action is necessary.

1115 - Database RESTORE started

Description

A local database restore is beginning. This UIM follows the issue of the *chg-db:action=restore* command.

Example

```
RLGHNCXA21W 00-06-18 19:12:00 EST  EAGLE 35.0.0
0147.1115    CARD 1201,A  INFO   Database RESTORE started
```

Alarm Level

No alarm condition. The message is informational only.

Procedure

1. No action is necessary.

1116 - Database action ended - OK

Description

A local database backup or restore has successfully completed. This UIM follows the issue of the *chg-db* command.

Example

```
RLGHNCXA21W 00-06-18 19:12:00 EST  EAGLE 35.0.0
0147.1116    CARD 1201,A  INFO   Database action ended - OK
```

Alarm Level

No alarm condition. The message is informational only.

Procedure

1. No action is necessary.

1117 - Database action ended - FAIL

Description

A local database backup or restore has unsuccessfully completed. This UIM follows the issue of the *chg-db* command.

Example

```
RLGHNCXA21W 00-06-18 19:12:00 EST  EAGLE 35.0.0
0147.1117    CARD 1201,A  INFO   Database action ended - FAILED
```

Alarm Level

No alarm condition. The message is informational only.

Procedure

1. No action is necessary.

1118 - Audit of LNP backup database completed

Description

The LNP backup database audit cycle has been completed.

Example

```
RLGHNCXA21W 00-02-07 12:01:43 EST  EAGLE 35.0.0
0014.1118    SYSTEM      Audit of LNP backup database completed
```

Alarm Level

No alarm condition. The message is informational only.

Procedure

1. No action necessary.

1119 - LNP database audit - internal error

Description

The LNPA task on either OAM is in an error state.

Example

```
RLGHNCXA21W 00-02-07 12:01:43 EST  EAGLE 35.0.0
0014.1119    CARD  1114    LNP - database audit - internal error
```

Alarm Level

No alarm condition. The message is informational only.

Procedure

1. Reboot the OAM.

2. If the problem persists, contact Tekelec Technical Services at the appropriate number.

   Reference: “Customer Care Center” on page 1-13.

1120 - TRBL Queue is full:elements overwritten

Description

This message indicates that more than 7 UIMs per second are being output. One or more might be lost.

Example

```
RLGHNCXA21W 00-02-07 12:01:43 EST  EAGLE 35.0.0
0014.1120    CARD 1113   INFO   RBL Queue is full;elements overwritten
```

Alarm Level

No alarm condition. The message is informational only.

Procedure

1. No action is necessary.

1121 - LNP rcvd query from unknown CGPA PC

Description

The LNP query receives a calling party point code that is not in the routing table. The system LNP subsystem normally sends a response back to the calling party PC in the query. The system did not respond to this query.

Example

```
RLGHNCXA21W 00-04-18 19:00:11 EST  EAGLE 35.0.0
0107.1121    CARD 1103,A1  INFO   LNP rcvd query from unknown CGPA PC
             SIO=03   OPC=   003-252-000  DPC=   000-071-000
             CDPA:   AI=10   SSN=05   TT=250
                     ADDR=ABCDEF1234567890ABCDE
             CGPA:   AI=12   PC=001-001-001    SSN=002
             DATA=3a e2 38 c7 04 56 04 72 e0 e8 30 e9
                  2e cf 01 00 d0 02 83 01 f2 25 aa 0b
                  84 09 01 00 11 0a 19 49
             LSN=A1234567
```

Legend

SIO	Service information octet	OPC	Origination point code
DPC	Destination point code	CDPA	Called party address
AI	Address Indicator	SSN	Subsystem number
TT	Translation type	ADDR	Address
CGPA	Calling party address	PC	Point code
DATA	Hex dump of TCAP part of MSU	LSN	Linkset name

Alarm Level

No alarm condition. The message is informational only.

Procedure

1. Provision a route to the Calling Party Point Code using the *ent-dstn* and *ent-rte* commands.

1122 - LNP rcvd query with undefined TT/SERV

Description

The LNP Query Subsystem received a message with an undefined Service. The Called Party Translation type in the incoming message determines the format of the MSU. This UIM can be issued when there is no LNP Service associated with the Translation Type of this MSU.

If the Translation Type of the MSU is provisioned as a Translation Type for LNPQS Service, the EAGLE 5 ISS attempts to determine the actual LNP Service for this message by examining the OP CODE value. If the OP CODE does not match any supported by the EAGLE 5 ISS Service (IN, AIN, IS-41), this UIM is issued.

This UIM can also be issued as a result of an error response from an end office because the EAGLE 5 ISS LNP database response returned an LRN that was not provisioned in the end office.

Trace tools and/or the hex dump in the UIM can be used to determine the TCAP information. Note that the GTT data is not contained in the SCCP layer because the EAGLE 5 ISS does not return this information in the LNP response to the end office.

Example

```
RLGHNCXA21W 00-04-18 19:00:11 EST  EAGLE 35.0.0
0107.1122    CARD 1103,A1  INFO   LNP rcvd query with undefined TT/SERV
             SIO=03   OPC=   003-252-000  DPC=   000-071-000
             CDPA:   AI=10   SSN=05   TT=250
                     ADDR=ABCDEF1234567890ABCDE
             CGPA:   AI=12   PC=001-001-001    SSN=002
             DATA=3a e2 38 c7 04 56 04 72 e0 e8 30 e9
                  2e cf 01 00 d0 02 83 01 f2 25 aa 0b
                  84 09 01 00 11 0a 19 49
             LSN=A1234567
```

Legend

SIO	Service information octet	OPC	Origination point code
DPC	Destination point code	CDPA	Called party address
AI	Address Indicator	SSN	Subsystem number
TT	Translation type	ADDR	Address
CGPA	Calling party address	PC	Point code
DATA	Hex dump of TCAP part of MSU	LSN	Linkset name

Alarm Level

No alarm condition. The message is informational only.

Procedure

1. If the IN, AIN, IS-41, PCS 1900, or LNPQS LNP Query translation type has not been provisioned, it needs to be provisioned using the `ent-lnp-serv` command.

   If any of the above LNP Query Translation Types has not been provisioned, it can be changed using the `chg-lnp-serv` command.

2. If the Translation Type has been provisioned correctly, an SSP node in the network is using the wrong Translation Type or an invalid query.

1123 - LNP rcvd query with Message Relay TT

Description

The LNP Query Subsystem received a message with a Translation Type reserved for Message Relay. This happens if another node sent a message to the system for Message Relay with the routing indicator set to rt-on-ssn and ssn set to system's LNP subsystem.

Example

```
RLGHNCXA21W 00-04-18 19:00:11 EST  EAGLE 35.0.0
0107.1123    CARD 1103,A1  INFO   LNP rcvd query with Message Relay TT
             SIO=03   OPC=   003-252-000  DPC=   000-071-000
             CDPA:   AI=10   SSN=05   TT=250
                     ADDR=ABCDEF1234567890ABCDE
             CGPA:   AI=12   PC=001-001-001    SSN=002
             DATA=3a e2 38 c7 04 56 04 72 e0 e8 30 e9
                  2e cf 01 00 d0 02 83 01 f2 25 aa 0b
                  84 09 01 00 11 0a 19 49
             LSN=A1234567
```

Legend

SIO	Service information octet	OPC	Origination point code
DPC	Destination point code	CDPA	Called party address
AI	Address Indicator	SSN	Subsystem number
TT	Translation type	ADDR	Address
CGPA	Calling party address	PC	Point code
DATA	Hex dump of TCAP part of MSU	LSN	Linkset name

Alarm Level

No alarm condition. The message is informational only.

Procedure

1. No further action is necessary.

1124 - LNP Database IMPORT started

Description

The database import operation has started on the active or standby OAM.

Example

```
RLGHNCXA21W 00-02-07 12:01:43 EST  EAGLE 35.0.0
0014.1124    CARD  1113    LNP Database IMPORT started
```

Alarm Level

No alarm condition. The message is informational only.

Procedure

1. No action necessary.

1125 - GWS rcvd CDPA that could not be RDCTd

Description

This message indicates the EAGLE 5 ISS received an MSU, with a called party address (CDPA) that is not allowed in gateway screening (GWS) and cannot be redirected.

Example

```
RLGHNCXA21W 00-04-18 18:59:23 EST  EAGLE 35.0.0
0101.1125    CARD 1205,B  INFO   GWS rcvd CDPA that could not be RDCTd
         SIO=0a   OPC= s-003-244-000  DPC= s-000-071-000
         SCCP MT=  18
         CDPA:  AI=10  PC= s-003-003-003  SSN=005  TT=250
                ADDR=123456789012345678909
         CGPA:  AI=10  PC= s-004-004-004  SSN=005  TT=251
                ADDR=123456789012345678909
         SR=scrb     LSN=A1234567
```

NOTE: Four outputs are possible. The Legend includes abbreviations found in all variations.

Legend

ADDR	Address
AFTPC	Affected point code (for SCCP messages)
AFTSS	Affected subsystem (identifies the subsystem that failed)
AI	Address Indicator
CDPA	Called party address
CGPA	Calling party address
DATA	Information from the upper layers of SCCP management
DPC	Destination point code
H0H1	H0/H1 heading code
LSN	Linkset name
MULT	SCCP management message multiplicity indicator
OPC	Origination point code
PC	Point code
SCCP MT	SCCP message type
SCMG	SCCP management message
SIO	Service information octet
SR	Screening reference name
SSN	Subsystem number
TT	Translation type
TYPE	SCCP management message type

Alarm Level

No alarm condition. The message is informational only.

Procedure

1. If this called party address (CDPA) is one that should be redirected through the network, add the CDPA to the gateway screening (GWS) tables assigned to the link reporting this message. Use the *chg-scr-cdpa* command to add the CDPA to the list of allowed CDPA codes. Refer to the *Database Administration Manual - Gateway Screening* for instructions on adding a CDPA to GWS.

2. If the CDPA should not be redirected through the network, no action is necessary.

1126 - GWS rcvd CGPA that could not be RDCTd

Description

This message indicates the EAGLE 5 ISS received an MSU, with a calling party address (CGPA) that is not allowed in gateway screening (GWS) and cannot be redirected.

Example

```
RLGHNCXA21W 00-04-18 18:59:23 EST  EAGLE 35.0.0
0101.1126    CARD 1205,B  INFO   GWS rcvd CGPA that could not be RDCTd
         SIO=0a   OPC= s-003-244-000  DPC= s-000-071-000
         SCCP MT=  18
         CDPA:  AI=10  PC= s-003-003-003  SSN=005  TT=250
                ADDR=123456789012345678909
         CGPA:  AI=10  PC= s-004-004-004  SSN=005  TT=251
                ADDR=123456789012345678909
         SR=scrb     LSN=A1234567
```

NOTE: Four outputs are possible. The Legend includes abbreviations found in all variations.

Legend

ADDR	Address
AFTPC	Affected point code (for SCCP messages)
AFTSS	Affected subsystem (identifies the subsystem that failed)
AI	Address Indicator
CDPA	Called party address
CGPA	Calling party address
DATA	Information from the upper layers of SCCP management
DPC	Destination point code
H0H1	H0/H1 heading code
LSN	Linkset name
MULT	SCCP management message multiplicity indicator
OPC	Origination point code
PC	Point code
SCCP MT	SCCP message type
SCMG	SCCP management message
SIO	Service information octet
SR	Screening reference name
SSN	Subsystem number
TT	Translation type
TYPE	SCCP management message type

Alarm Level

No alarm condition. The message is informational only.

Procedure

1. If this calling party address (CGPA) is one that should be redirected through the network, add the CGPA to the gateway screening (GWS) tables assigned to the link reporting this message. Use the *chg-scr-cgpa* command to add the CGPA to the list of allowed CGPA codes. Refer to the *Database Administration Manual - Gateway Screening* for instructions on adding a CGPA to GWS.

2. If the CGPA should not be redirected through the network, no action is necessary.

1127 - GWS rcvd AFTPC that could not be RDCTd

Description

This message indicates the EAGLE 5 ISS received an MSU, with an allowed affected point code (AFTPC) that is not allowed in gateway screening (GWS) and cannot be redirected.

Example

```
RLGHNCXA21W 00-04-18 18:59:23 EST  EAGLE 35.0.0
0101.1127    CARD 1205,B  INFO   GWS rcvd AFTPC that could not be RDCTd
         SIO=0a   OPC= s-003-244-000  DPC= s-000-071-000
         SCCP MT=  18
         CDPA:  AI=10  PC= s-003-003-003  SSN=005  TT=250
                ADDR=123456789012345678909
         CGPA:  AI=10  PC= s-004-004-004  SSN=005  TT=251
                ADDR=123456789012345678909
         SR=scrb     LSN=A1234567
```

NOTE: Four outputs are possible. The Legend includes abbreviations found in all variations.

Legend

ADDR	Address
AFTPC	Affected point code (for SCCP messages)
AFTSS	Affected subsystem (identifies the subsystem that failed)
AI	Address Indicator
CDPA	Called party address
CGPA	Calling party address
DATA	Information from the upper layers of SCCP management
DPC	Destination point code
H0H1	H0/H1 heading code
LSN	Linkset name
MULT	SCCP management message multiplicity indicator
OPC	Origination point code
PC	Point code
SCCP MT	SCCP message type
SCMG	SCCP management message
SIO	Service information octet
SR	Screening reference name
SSN	Subsystem number
TT	Translation type
TYPE	SCCP management message type

Alarm Level

No alarm condition. The message is informational only.

Procedure

1. If this calling allowed affected point code (AFTPC) is one that should be redirected through the network, add the AFTPC to the gateway screening (GWS) tables assigned to the link reporting this message. Use the *chg-scr-aftpc* command to add the AFTPC to the list of allowed AFTPC codes. Refer to the *Database Administration Manual - Gateway Screening* for instructions on adding a AFTPC to GWS.

2. If the AFTPC should not be redirected through the network, no action is necessary.

1128 - GWS rcvd TT that could not be RDCTd

Description

This message indicates the EAGLE 5 ISSreceived an MSU, with a translation type (TT) that is not allowed in gateway screening (GWS) and cannot be redirected.

Example

```
RLGHNCXA21W 00-04-18 18:59:23 EST  EAGLE 35.0.0
0101.1128    CARD 1205,B  INFO   GWS rcvd TT that could not be RDCTd
         SIO=0a   OPC= s-003-244-000  DPC= s-000-071-000
         SCCP MT=  18
         CDPA:  AI=10  PC= s-003-003-003  SSN=005  TT=250
                ADDR=123456789012345678909
         CGPA:  AI=10  PC= s-004-004-004  SSN=005  TT=251
                ADDR=123456789012345678909
         SR=scrb     LSN=A1234567
```

NOTE: Four outputs are possible. The Legend includes abbreviations found in all variations.

Legend

ADDR	Address
AFTPC	Affected point code (for SCCP messages)
AFTSS	Affected subsystem (identifies the subsystem that failed)
AI	Address Indicator
CDPA	Called party address
CGPA	Calling party address
DATA	Information from the upper layers of SCCP management
DPC	Destination point code
H0H1	H0/H1 heading code
LSN	Linkset name
MULT	SCCP management message multiplicity indicator
OPC	Origination point code
PC	Point code
SCCP MT	SCCP message type
SCMG	SCCP management message
SIO	Service information octet
SR	Screening reference name
SSN	Subsystem number
TT	Translation type
TYPE	SCCP management message type

Alarm Level

No alarm condition. The message is informational only.

Procedure

1. If this TT is one that should be redirected through the network, add the TT to the gateway screening (GWS) tables assigned to the link reporting this message. Use the *chg-scr-tt* command to add the TT to the list of allowed TT codes. Refer to the *Database Administration Manual - Gateway Screening* for instructions on adding a TT to GWS.

2. If this TT should not be redirected through the network, no action is necessary.

1129 - Ported subs SMSC matches Home SMSC Addr

Description

This message indicates that a ported out subscriber is fraudulently attempted to send SMS using the old networks SMSC. An error message was generated and returned to the originating MSC.

Example

```
RLGHNCXA21W 00-04-18 19:02:05 EST  EAGLE 35.0.0
0112.1129  CARD 1103,A1  INFO  Ported subs SMSC matches Home SMSC Addr
           SIO=03   OPC=   001-001-001     DPC=   002-002-002
           SCCP MSG TYPE=04
           CDPA:  NI=1  RI=0    GTI=04  SSNI=1  PCI=1
                  TT=250   NP=04  NAI=010  ADDR=123456789012345678901
                  PC=   003-003-003  SSN=005
           CGPA:  NI=1  RI=0    GTI=04  SSNI=1  PCI=1
                  TT=100   NP=07  NAI=012  ADDR=012345678901234567890
                  PC=   001-001-001  SSN=004
           LSN=A1234567  GTTSET=3  203 46
```

Legend

ADDR	Address	CDPA	Called party address
CGPA	Calling party address	GTI	Global title indicator
GTTSET	GTT Set Index	LSN	Linkset name
NAI	Nature of address indicator	NI	Network indicator value
NP	Numbering plan	PC	Point code
PCI	Point code indicator	RI	Routing indicator
SSN	Subsystem number	SSNI	Subsystem number indicator
TT	Translation type		
TRANSLATED PC	Translated point code		
TRANSLATED SS	Translated subsystem		

NOTE: If Global Title Translation is found, the GTTSET in which the translation is found appears. If Global Title Translation is not found, the GTTSET does not display.

Alarm Level

No alarm condition. The message is informational only.

Procedure

1. No action necessary.

1130 - LOCREQ rcvd - IS412GSM not provisioned

Description

The system received an IS-41 LOC Request message for which it attempted to issue a LOC Request response. However, G-Port found the IS-41 to GSM Migration prefix (specified by the IS412GSM parameter) is not provisioned on this system. With this UIM, G-Port is notifying the operator it cannot process the LOCREQ messages and is allowing it to fall through to the GTT for handling.

To be able to perform the IS-41 to GSM Migration feature and to accept LOC Request messages, you must first specify the IS412GSM prefix in GSMOPTS.

Example

```
RLGHNCXA21W 00-04-18 19:02:05 EST  EAGLE 35.0.0
0112.1130  CARD 1103,A1  INFO  LOCREQ rcvd - IS412GSM not provisioned
           SIO=03   OPC=   001-001-001     DPC=   002-002-002
           SCCP MSG TYPE=04
           CDPA:  NI=1  RI=0    GTI=04  SSNI=1  PCI=1
                  TT=250   NP=04  NAI=010  ADDR=123456789012345678901
                  PC=   003-003-003  SSN=005
           CGPA:  NI=1  RI=0    GTI=04  SSNI=1  PCI=1
                  TT=100   NP=07  NAI=012  ADDR=01234567890123456789O
                  PC=   001-001-001  SSN=004
           LSN=A1234567  GTTSET=3  203 46
```

Legend

ADDR	Address	CDPA	Called party address
CGPA	Calling party address	GTI	Global title indicator
GTTSET	GTT Set Index	LSN	Linkset name
NAI	Nature of address indicator	NI	Network indicator value
NP	Numbering plan	PC	Point code
PCI	Point code indicator	RI	Routing indicator
SSN	Subsystem number	SSNI	Subsystem number indicator
TT	Translation type		
TRANSLATED PC	Translated point code		
TRANSLATED SS	Translated subsystem		

NOTE: If Global Title Translation is found, the GTTSET in which the translation is found appears. If Global Title Translation is not found, the GTTSET does not display.

Alarm Level

No alarm condition. The message is informational only.

Procedure

1. Enter the *rtrv-gsmopts* command to display the IS412GSM setting in the GSM System Options. Following is an example of the output:

```
rlghncxa03w 03-05-20 09:04:14 EST  EAGLE 30.1.0
GSM OPTIONS
----------------------
DEFMCC      = NONE
DEFMNC      = NONE
SRFADDR     = 123456789abcdef
MSRNDIG     = RN
DEFMAPVR    = 1
SRIDN       = TCAP
IS412GSM    = 0123456789abcde

rlghncxa03w 03-03-20 09:04:14 EST  EAGLE 30.1.0
SRFADDR=123456789abcdef    SRFNAI=7    SRFNP=15
MSRNDIG=CCRNDN
MSRNNAI=7    MSRNNP=15 DEFMAPVR=2
;
```

This example shows a setting supporting the IS-41 LOC Request message. If the IS412GSM parameter is not specified, proceed to step 2. However, if it is set with a valid value, proceed to the step 3.

2. Use the *chg-gsmopts* command to specify the IS-41 to GSM migration prefix. Refer to the *Commands Manual* for details. Then re-issue the command that caused this UIM.

3. If the problem persists with the IS412GSM parameter specified, call Tekelec Technical Services at the appropriate number.

Reference: “Customer Care Center” on page 1-13

1131 - Invalid digits in IS41 MAP Digits parm

Description

A LOC Request message contained invalid data and will be passed to the GTT. G-Port determined a received Location Request message had invalid data in the called party number parameter fields. The verified fields must contain:

- Digits: from 5 to 21 digits
- Encoding scheme: BCD
- Numbering plan: Telephony

Example

```
RLGHNCXA21W 00-04-18 19:02:05 EST  EAGLE 35.0.0
0112.1131  CARD 1103,A1  INFO  Invalid digits in IS41 MAP Digits parm
           SIO=03   OPC=   001-001-001     DPC=   002-002-002
           SCCP MSG TYPE=04
           CDPA:  NI=1  RI=0    GTI=04  SSNI=1  PCI=1
                  TT=250   NP=04  NAI=010  ADDR=123456789012345678901
                  PC=   003-003-003  SSN=005
           CGPA:  NI=1  RI=0    GTI=04  SSNI=1  PCI=1
                  TT=100   NP=07  NAI=012  ADDR=01234567890123456789O
                  PC=   001-001-001  SSN=004
           LSN=A1234567  GTTSET=3  203 46
```

Legend

ADDR	Address	CDPA	Called party address
CGPA	Calling party address	GTI	Global title indicator
GTTSET	GTT Set Index	LSN	Linkset name
NAI	Nature of address indicator	NI	Network indicator value
NP	Numbering plan	PC	Point code
PCI	Point code indicator	RI	Routing indicator
SSN	Subsystem number	SSNI	Subsystem number indicator
TT	Translation type		
TRANSLATED PC	Translated point code		
TRANSLATED SS	Translated subsystem		

NOTE: If Global Title Translation is found, the GTTSET in which the translation is found appears. If Global Title Translation is not found, the GTTSET does not display.

Alarm Level

No alarm condition. The message is informational only.

Procedure

1. No action necessary.

1132 - SLAN DLK ping test completed

Description

This message indicates that the manual TCP/IP ping test has completed. The ping test is initiated by the *tst-dlk* command.

Example

```
RLGHNCXA21W 00-06-18 19:12:00 EST  EAGLE 35.0.0
0147.1132    CARD 1201    INFO   SLAN DLK ping test completed.
             TESTS REQUESTED= 0 PASSED COUNT=0  FAILED COUNT =00
             AVR RND TRIP=0   MAX RND TRIP=06  MIN RND TRIP=0
             HOST IPADDR  =194.4.201.50
```

Alarm Level

No alarm condition. The message is informational only.

Procedure

1. If the test passes with FAILED COUNT = 00, no further action is necessary.

2. If the test fails:

a. confirm that IP addresses are correct

b. confirm with the end user that their equipment and software is up and functioning properly

c. have the end user check their network and their cable connections

d. check the cable connections at the EAGLE 5 ISS

e. call Tekelec Technical Services at the appropriate number.
Reference: “Customer Care Center” on page 1-13

1133 - GX25 outbound data exceeds packet size

Description

This message indicates that the packet being converted by the X.25 gateway is too long to be handled by the X.25 network (when a network is used) or the link when there is a direct connection to the X.25 end user.

Example

```
RLGHNCXA21W 00-06-18 19:12:00 EST  EAGLE 35.0.0
0147.1133    CARD 1201,A  INFO   GX25 outbound data exceeds packet size
             CHANNEL=00       X_ADDR=841029159765432
             CODE=A2 00       PC   =116-006-001
```

Legend

CHANNEL	Logical channel
X_ADDR	The X.25 address for the X.25 end user (destination). Use the *rtrv-x25-dstn* command to determine the point code that corresponds to this X.25 address
CODE	left byte - length of TCAP packet in hexadecimal format right byte - always 00
PC	Point code for the SS7 end user (OPC). Use the *rtrv-x25-dstn* command to determine the X.25 address that corresponds to this point code.

Alarm Level

No alarm condition. The message is informational only.

Procedure

1. If this condition occurs often, change the packet size to 256. This packet size change must take place at both the end user and the EAGLE 5 ISS.

At the EAGLE 5 ISS end of the X.25 link, use the *chg-x25-slk* command to change the packet size.

2. If the fault is not cleared call Tekelec Technical Services at the appropriate number.

Reference: “Customer Care Center” on page 1-13

1134 - GX25 route not found

Description

This message indicates that the X.25 gateway was unable to find an X.25 route for an outgoing MSU or an incoming X.25 call request.

Example

```
RLGHNCXA21W 00-06-18 19:12:00 EST  EAGLE 35.0.0
0147.1134    CARD 1201,A  INFO   GX25 route not found
             CHANNEL=00       X_ADDR=841029159765432
             CODE=00 00       PC   =116-006-001
```

Legend

CHANNEL	Logical channel
X_ADDR	The X.25 address for the X.25 end user (destination). Use the *rtrv-x25-dstn* command to determine the point code that corresponds to this X.25 address
CODE	left byte - 00 = idle, 01 or 02 = waiting for call right byte - always 00
PC	Point code for the SS7 end user (OPC). Use the *rtrv-x25-dstn* command to determine the X.25 address that corresponds to this point code.

Alarm Level

No alarm condition. The message is informational only.

Procedure

1. Determine if both ends, as defined by their point codes and addresses, are permitted a connection. If so, a route needs to be defined. Use the *ent-x25-rte* command to define and configure the route. Refer to the *Database Administration Manual* for information about this procedure.

2. If the end points are not permitted a connection: 1) require that the X.25 end user (as defined by the PC= value) place the call with the correct X.25 address for the configured route, or 2) require that the SS7 end user (as defined by the X_ADDR= value) use the correct point code for the configured route.

3. If the fault is not cleared call Tekelec Technical Services at the appropriate number.

   Reference: “Customer Care Center” on page 1-13

1135 - GX25 route not available

Description

This message indicates that an X.25 route is not available for routing an MSU received from the SS7 end user. This should be a temporary condition following a failure at the X.25 end user. See messages 1143, 1144, and 1145.

Example

```
RLGHNCXA21W 00-06-18 19:12:00 EST  EAGLE 35.0.0
0147.1135    CARD 1201,A  INFO   GX25 route not available
             CHANNEL=03       X_ADDR=0000000000000000
             CODE=02 00      PC=   116-006-001
```

Legend

CHANNEL	Logical channel
X_ADDR	The X.25 address for the X.25 end user (destination). Use the *rtrv-x25-dstn* command to determine the point code that corresponds to this X.25 address
CODE	left byte - 00 = idle, 01 or 02 = waiting for call right byte - always 00
PC	Point code for the SS7 end user (OPC). Use the *rtrv-x25-dstn* command to determine the X.25 address that corresponds to this point code.

Alarm Level

No alarm condition. The message is informational only.

Procedure

1. Determine why the X.25 end user, as defined by the PC value, is out of service and attempt to re-establish the service.

2. If the fault is not cleared, call Tekelec Technical Services at the appropriate number.

   Reference: “Customer Care Center” on page 1-13

1136 - GX25 route already connected

Description

This message indicates that a call request was received from an X.25 end user and the X.25 route was already in the call established phase. Both connections are cleared to assure that only one connection is established at a time.

Example

```
RLGHNCXA21W 00-06-18 19:12:00 EST  EAGLE 35.0.0
0147.1136    CARD 1201,A  INFO   GX25 route already connected
             CHANNEL=00       X_ADDR=84102915841029159765432
             CODE=00 00       PC   =116-006-001
```

Legend

CHANNEL	Logical channel
X_ADDR	The X.25 address for the X.25 end user (destination). Use the *rtrv-x25-dstn* command to determine the point code that corresponds to this X.25 address
CODE	left byte - 00 = idle, 01 or 02 = waiting for call right byte - always 00
PC	Point code for the SS7 end user (OPC). Use the *rtrv-x25-dstn* command to determine the X.25 address that corresponds to this point code.

Alarm Level

No alarm condition. The message is informational only.

Procedure

If this fault reoccurs for this route:

1. Inform the X.25 end user, as defined by the X_ADDR value, to not permit this condition.

2. Use the *rtrv-x25-rte* command to verify that the *type* of route is correct.

3. If the fault is not cleared, call Tekelec Technical Services at the appropriate number.

   Reference: “Customer Care Center” on page 1-13

1137 - GX25 incorrect X25 address

Description

This message indicates that an X.25 end user attempted to make a connection and either the called or calling X.25 address was not in the correct domain for conversion.

Example

```
RLGHNCXA21W 00-06-18 19:12:00 EST  EAGLE 35.0.0
0147.1137    CARD 1201,A  INFO   GX25 incorrect X.25 address
             CHANNEL=00       X_ADDR=84102915841029159765432
             CODE=01 00       PC=   000-000-000
```

Legend

CHANNEL	Logical channel
X_ADDR	The X.25 address for the X.25 end user (destination). Use the *rtrv-x25-dstn* command to determine the point code that corresponds to this X.25 address
CODE	X.25 packet type left byte - 00 = incorrect calling address left byte - 01 = incorrect called address right byte - always 00
PC	Point code for the SS7 end user (OPC). Use the *rtrv-x25-dstn* command to determine the X.25 address that corresponds to this point code.

Alarm Level

No alarm condition. The message is informational only.

Procedure

1. Verify that the X.25 address (the X_ADDR= value) is correct.

2. If the X.25 address is not correct, advise the X.25 end user to use the correct address.

3. If the X.25 address is correct, the domain of the point code needs to be changed and the X.25 route redefined. The calling address must be in the X.25 network domain and the called address must be in the SS7 domain.

4. If the fault is not cleared, call Tekelec Technical Services at the appropriate number.

Reference: “Customer Care Center” on page 1-13

1138 - GX25 unsupported packet type received

Description

This message indicates that an unsupported packet type was received.

Example

```
RLGHNCXA21W 00-06-18 19:12:00 EST  EAGLE 35.0.0
0147.1138    CARD 1201,A  INFO   GX25 unsupported packet type received
             CHANNEL=00       X_ADDR=0000000000000000
             CODE=10 00       PC=   -----------
```

Legend

CHANNEL: Logical channel

X_ADDR: X.25 address

CODE: X.25 packet type
left byte - code bitmap:
bit 0 = unused (LSB)
bit 1 = unused
bit 2 = registration packet
bit 3 = interrupt packet
bit 4 = diagnostic packet
bit 5 = M-bit present
bit 6 = Q-bit present
bit 7 = D-bit present
right byte - always 00.

PC: With an invalid X.25 packet, the point code will always be invalid (----------).

Alarm Level

No alarm condition. The message is informational only.

Procedure

1. If problem persists, the X.25 end user may need to change the X.25 parameters to prevent transmission of the unsupported packet types. If the X.25 communications go through a network, the parameters may need to be changed on the network.

2. If the fault is not cleared, use the *rept-x25-meas* command and then call Tekelec Technical Services at the appropriate number.

Reference: “Customer Care Center” on page 1-13

1139 - GX25 unsupported MSU type received

Description

This message indicates that an unsupported MSU type was received and the MSU was discarded. Only MSUs with an SIO of x0, x1, x2, or x3 are supported.

Example

```
RLGHNCXA21W 00-06-18 19:12:00 EST  EAGLE 35.0.0
0147.1139    CARD 1201,A  INFO   GX25 unsupported MSU type received
             CHANNEL=00       X_ADDR=011900040078
             CODE=85 01       PC   =116-006-001
```

Legend

CHANNEL: Logical Channel

X_ADDR: X.25 Address

CODE:
left byte - SIO field value
right byte - SCCP message type when:
SIO = 03 (SCCP - data) or
SIO = 83 (SCCP - data)
- H0H1 when SIO = x0, x1, x2

PC: OPC (use the *rtrv-x25-dstn* command to determine the X.25 address that corresponds to this point code).

Alarm Level

No alarm condition. The message is informational only.

Procedure

1. Determine if the point code, as defined by the PC value, should be an X.25 end user.
2. If yes, advise the SS7 end user, as defined by the X_ADDR= value, that they are transmitting unsupported MSU types.
3. If not, correct the MTP routing to prevent routing to this link.

4. If the fault is not cleared, use the *rept-x25-meas* command and then call Tekelec Technical Services at the appropriate number.

   Reference: “Customer Care Center” on page 1-13

1140 - GX25 DPC not defined

Description

This message indicates that an MSU was received for which the destination point code (DPC) is not defined for X.25 conversion.

Example

```
RLGHNCXA21W 00-06-18 19:12:00 EST  EAGLE 35.0.0
0147.1140    CARD 1201,A  INFO   GX25 DPC not defined
             CHANNEL=00       X_ADDR=0000000000000000
             CODE=00 00        PC   =116-006-001
```

Legend

CHANNEL	Logical channel
X_ADDR	The X.25 address for the X.25 end user (destination). Use the *rtrv-x25-dstn* command to determine the point code that corresponds to this X.25 address
CODE	X.25 packet type
PC	Point code for the SS7 end user (OPC). Use the *rtrv-x25-dstn* command to determine the X.25 address that corresponds to this point code.

Alarm Level

No alarm condition. The message is informational only.

Procedure

1. Determine if the point code, as defined by the PC= value, should be an X.25 end user.

2. If yes, correct the configuration using the *ent-x25-dstn* command (to define the X.25 end user) and the *ent-x25-rte* command (to define an X.25 route).

3. If not, correct the MTP routing to prevent routing to the X.25 link set.

1141 - GX25 unrecognized X25 calling address

Description

This message indicates that the gateway has detected an unrecognized X.25 calling address in a call request packet.

Example

```
RLGHNCXA21W 00-06-18 19:12:00 EST  EAGLE 35.0.0
0147.1141    CARD 1201,A  INFO   GX25 unrecognized X25 calling address
             CHANNEL=03      X_ADDR=84102915
             CODE=00 00       PC=   000-000-000
```

Legend

CHANNEL	Logical channel
X_ADDR	The X.25 address for the X.25 end user (destination). Use the *rtrv-x25-dstn* command to determine the point code that corresponds to this X.25 address
CODE	X.25 packet type
PC	Point code for the SS7 end user (OPC). Use the *rtrv-x25-dstn* command to determine the X.25 address that corresponds to this point code.

Alarm Level

No alarm condition. The message is informational only.

Procedure

1. If the caller, as defined by the X_ADDR= value, is a valid X.25 end user, define the destination using the *ent-x25-dstn* command and define any needed routes using the *ent-x25-rte* command.

2. If the caller is not a valid X.25 end user, contact sender and determine why a connection was attempted.

3. If the fault is not cleared, use the *rept-x25-meas* command and then call Tekelec Technical Services at the appropriate number.

   Reference: “Customer Care Center” on page 1-13.

1142 - GX25 unrecognized X25 called address

Description

This message indicates that the Gateway has detected an unrecognized X.25 called address in a call request packet.

Example

```
RLGHNCXA21W 00-06-18 19:12:00 EST  EAGLE 35.0.0
0147.1142    CARD 1201,A  INFO  GX25 unrecognized X25 called address
             CHANNEL=03       X_ADDR=84102915
             CODE=00 00       PC=   116-006-001
```

Legend

CHANNEL	Logical channel
X_ADDR	The X.25 address for the X.25 end user (destination). Use the *rtrv-x25-dstn* command to determine the point code that corresponds to this X.25 address
CODE	X.25 packet type
PC	Point code for the SS7 end user (OPC). Use the *rtrv-x25-dstn* command to determine the X.25 address that corresponds to this point code.

Alarm Level

No alarm condition. The message is informational only.

Procedure

1. Determine if the called address, as defined by the X_ADDR value, is a valid address for an SS7 end user.

2. If yes, define the destination and route using the *ent-x25-dstn* and *ent-x25-rte* commands. Refer to the *Database Administration Manual - Features* for more information about this procedure.

3. If not, advise the X.25 end user, as defined by the PC value, to specify the correct address.

4. If the fault is not cleared, use the *rept-x25-meas* command and then call Tekelec Technical Services at the appropriate number.

   Reference: “Customer Care Center” on page 1-13

1143 - GX25 cannot make connection

Description

This message indicates that the X.25 gateway cannot make the desired connection. See also messages 1135 and 1144.

Example

```
RLGHNCXA21W 00-06-18 19:12:00 EST  EAGLE 35.0.0
0147.1143    CARD 1201,A  INFO   GX25 cannot make connection
             CHANNEL=03   X_ADDR=84102915
             CODE=09 00   PC   =116-006-001
```

Legend

CHANNEL	Logical channel
X_ADDR	The X.25 address for the X.25 end user (destination). Use the *rtrv-x25-dstn* command to determine the point code that corresponds to this X.25 address
PC	Point code for the SS7 end user (OPC). Use the *rtrv-x25-dstn* command to determine the X.25 address that corresponds to this point code.
CODE	**X.25 packet type (left byte)** 00 = DTE clear 01 = number busy 03 = invalid facility request 05 = network congestion 09 = out of order 0B = access barred 0D = not in service 11 = incorrect called address 13 = local procedure error 19 = collect call refused 21 = incompatible destination 29 = fast select not subscribed F0 = call rejected **X.25 reject reason (right byte) when left byte = F0** 01 = timeout 02 = internal 03 = collision 04 = rejected 07 = no LCN **(when left byte ≠ F0, right byte = X.25 call clear diagnostic code.**

Alarm Level

No alarm condition. The message is informational only.

Procedure

1. Examine the CODE data field in the message (see description below) for a possible fault explanation.

2. Verify that the X.25 end user is in service and attempt to re-establish service.

3. Verify that the X.25 addresses of the two nodes (given by X_ADDR and PC values in the message) are in agreement at both the X.25 end user and at the SS7 end user. Use the *rtrv-x25-dstn* command to determine an X.25 address that corresponds to a SS7 point code and vice versa.

4. Use the *rept-x25-meas* command to obtain more information about the X.25 links. If this information does not point to a resolution of the problem, go to the next action item.

5. Call Tekelec Technical Services at the appropriate number.

   Reference: “Customer Care Center” on page 1-13

1144 - GX25 logical channel cleared

Description

This message indicates that the X.25 gateway had a route connection cleared. Also see message 1135.

Example

```
RLGHNCXA21W 00-06-18 19:12:00 EST  EAGLE 35.0.0
0147.1144    CARD 1201,A  INFO   GX25 logical channel cleared
             CHANNEL=00       X_ADDR=84102915
             CODE=09 00       PC   =116-006-001
```

Legend

CHANNEL	Logical channel	
X_ADDR	The X.25 address for the X.25 end user (destination). Use the *rtrv-x25-dstn* command to determine the point code that corresponds to this X.25 address	
PC	Point code for the SS7 end user (OPC). Use the *rtrv-x25-dstn* command to determine the X.25 address that corresponds to this point code.	
CODE	**X.25 packet type (left byte)**	
	00 = DTE clear	0D = not in service
	01 = number busy	11 = incorrect called address
	03 = invalid facility request	13 = local procedure error
	05 = network congestion	19 = collect call refused
	09 = out of order	21 = incompatible destination
	0B = access barred	29 = fast select not subscribed
	right byte = diagnostic code.	

Alarm Level

No alarm condition. The message is informational only.

Procedure

1. Verify from the adjacent X.25 node if this indicates a problem or if it is a normal state of routinely clearing the call.

2. If is a problem, and the problem continues, use the *rept-x25-meas* command and contact Tekelec Technical Services at the appropriate number.

   Reference: “Customer Care Center” on page 1-13.

1145 - GX25 unexpected restart received

Description

This message indicates that the X.25 gateway has received an unexpected restart packet. A restart packet causes all active connections to be cleared and indicates that the X.25 network or, in the case of a direct X.25 connection, the X.25 end user has restarted and reset X.25 level 3.

Example

```
RLGHNCXA21W 00-06-18 19:12:00 EST  EAGLE 35.0.0
0147.1145    CARD 1201,A  INFO   GX25 unexpected restart received
             CHANNEL=00   X_ADDR=0000000000000000
             CODE=03 00   PC   =000-000-000
```

Legend

CHANNEL	Logical channel
X_ADDR	The X.25 address for the X.25 end user (destination). Use the *rtrv-x25-dstn* command to determine the point code that corresponds to this X.25 address
CODE	X.25 packet type
PC	Point code for the SS7 end user (OPC). Use the *rtrv-x25-dstn* command to determine the X.25 address that corresponds to this point code.

Alarm Level

No alarm condition. The message is informational only.

Procedure

1. Contact the X.25 end user or X.25 network provider, as appropriate.

2. If restarts continue, use the *rept-x25-meas* command and then call Tekelec Technical Services at the appropriate number.

   Reference: “Customer Care Center” on page 1-13.

1146 - REPT-XLST-TIMO: X-LIST entry expired

Description

This message indicates that the timer has expired for an x-list entry and that entry has been removed.

Example

```
RLGHNCXA21W 00-06-18 19:12:00 EST  EAGLE 35.0.0
0147.1146    CARD 1201    INFO   REPT-XLST-TIMO:X-LIST entry expired
             DPC=   001-001-001
```

Alarm Level

No alarm condition. The message is informational only.

Procedure

1. No further action is necessary.

1147 - MTP Invalid TFA received

Description

This message indicates the network elements of an adjacent node have not been configured properly.

Example

```
RLGHNCXA21W 00-06-18 19:12:00 EST  EAGLE 35.0.0
0147.1147    CARD 1201,A  INFO   MTP Invalid TFA received
             OPC=   001-001-001  CPC=   002-002-002
             LSN=lsn01a
```

Legend

CPC	Concerned point code
LSN	Linkset name
OPC	Origination point code

Alarm Level

No alarm condition. The message is informational only.

Procedure

1. Notify the craftsperson at the adjacent node of this error.

1148 - MTP Invalid TFR received

Description

This message indicates the network elements of an adjacent node have not been configured properly.

Example

```
RLGHNCXA21W 00-06-18 19:12:00 EST  EAGLE 35.0.0
0147.1148    CARD 1201,A  INFO   MTP Invalid TFR received
             OPC=   001-001-001  CPC=   002-002-002
             LSN=lsn01a
```

Legend

CPC	Concerned point code
LSN	Linkset name
OPC	Origination point code

Alarm Level

No alarm condition. The message is informational only.

Procedure

1. Notify the craftsperson at the adjacent node of this error.

1149 - SLK Level-3 T19 timer expired

Description

The link has been down for 5 minutes or the timer T19 has timed out.

Example

```
RLGHNCXA21W 00-06-18 19:12:00 EST  EAGLE 35.0.0
0147.1149    CARD 1201,A  INFO   SLK Level-3 T19 timer expired
```

Alarm Level

No alarm condition. The message is informational only.

Procedure

1. Activate measurements using the *chg-meas:collect=on* command. This starts measurements collection.

2. If the link is placed OOS-MT, use the measurements collected over the appropriate time period to determine the cause, and determine which action is now necessary.

   NOTE: See Chapter 4, "Measurements," for traffic measurements information.

1150 - SLK Inhibit Denied

Description

The request to inhibit the link has been denied by the far end.

Example

```
RLGHNCXA21W 00-06-18 19:12:00 EST  EAGLE 35.0.0
0147.1150    CARD 1201,A  INFO   SLK Inhibit Denied
```

Alarm Level

No alarm condition. The message is informational only.

Procedure

1. Inhibiting the link would cause the far end to prohibit the point code.

1151 - SLK Inhibit Response Timeout

Description

The system has sent a link inhibit request, but no inhibit acknowledge was received.

Example

```
RLGHNCXA21W 00-02-07 12:01:43 EST  EAGLE 35.0.0
0014.1151    CARD 1205,A nc00027  SLK Inhibit Response Timeout
```

Alarm Level

No alarm condition. The message is informational only.

Procedure

1. Try the inhibit command again. If still unsuccessful, contact the far-end office and verify the status.

1152 - SLK Uninhibit Denied

Description

The far end has denied the craftsperson’s request to uninhibit the link.

Example

```
RLGHNCXA21W 00-02-07 12:01:43 EST  EAGLE 35.0.0
0014.1152    CARD 1205,A nc00027  SLK Uninhibit Denied
```

Alarm Level

No alarm condition. The message is informational only.

Procedure

1. Contact the far end office to determine why this was denied.

1153 - SLK Uninhibit Response Timeout

Description

An uninhibit request was sent, but an uninhibit acknowledge was not received.

Example

```
RLGHNCXA21W 00-02-07 12:01:43 EST  EAGLE 35.0.0
0014.1153    CARD 1205,A nc00027  SLK Uninhibit Response Timeout
```

Alarm Level

No alarm condition. The message is informational only.

Procedure

1. Try the uninhibit request again. If still unsuccessful, contact the far-end.

1154 - MSU reception threshold exceeded

Description

This UIM is produced by the OAM. It is produced whenever the cumulative count of MSUs received on a given linkset exceeds the specified MSU_recvd_threshold within a specified time period.

Example

```
RLGHNCXA21W 00-02-07 12:01:43 EST  EAGLE 35.0.0
0014.1154    SYSTEM   INFO   MSU reception threshold exceeded
```

Alarm Level

No alarm condition. The message is informational only.

Procedure

1. No further action is necessary.

1155 - GWS MSU discard threshold exceeded

Description

This UIM is produced by the OAM. It is produced whenever the cumulative count of MSUs discarded due to gateway screening on a given linkset exceeds the specified MSU_reject_threshold within a specified time period.

Example

```
RLGHNCXA21W 00-02-07 12:01:43 EST  EAGLE 35.0.0
0014.1155    SYSTEM   INFO   GWS MSU discard threshold exceeded
```

Alarm Level

No alarm condition. The message is informational only.

Procedure

1. No further action is necessary.

1156 - ISCC loopback success

Description

The loop to transmit and receive data on the ISCC chip was successful.

Example e

```
RLGHNCXA21W 00-02-07 12:01:43 EST  EAGLE 35.0.0
0014.1156    SLK 1205,A nc00027  ISCC loopback success
```

Alarm Level

No alarm condition. The message is informational only.

Procedure

1. No action necessary.

1157 - ISCC loopback failed

Description

The loop to transmit and receive data on the ISCC chip was no successful.

Example

```
RLGHNCXA21W 00-02-07 12:01:43 EST  EAGLE 35.0.0
0014.1157    SLK 1205,A nc00027  ISCC loopback failed
```

Alarm Level

No alarm condition. The message is informational only.

Procedure

1. No action necessary.

1158 - ISCC loopback aborted

Description

The loop test to transmit and receive data on the ISCC chip was aborted because the request to activate link was received while running a loopback test.

Example

```
RLGHNCXA21W 00-02-07 12:01:43 EST  EAGLE 35.0.0
0014.1158    SLK 1205,A nc00027  ISCC loopback aborted
```

Alarm Level

No alarm condition. The message is informational only.

Procedure

1. No action necessary.

1159 - ISCC loopback in progress

Description

A loopback test request was received while the same loopback test is already in progress.

Example

```
RLGHNCXA21W 00-02-07 12:01:43 EST  EAGLE 35.0.0
0014.1159    SLK 1205,A nc00027  ISCC loopback in progress
```

Alarm Level

No alarm condition. The message is informational only.

Procedure

1. No action necessary.

1160 - GWS rcvd ISUP that is not allowed

Description

This message indicates gateway screening (GWS) has discarded an MSU because the ISUP is listed as one that is not allowed in this network.

Example

```
RLGHNCXA21W 00-04-18 18:59:58 EST  EAGLE 35.0.0
0105.1160   CARD 1205,A  INFO  GWS rcvd ISUP that is not allowed
             SIO=0a   OPC= s-003-247-000  DPC= s-002-000-000
             DATA=12 34 56 78 90 12 34 56 78 90 12 34
                  56 78 90 12 34 56 78 90 12 34 56 78
             SR=scrb  LSN=A1234567
```

Legend

DATA	Information from the upper layers of SCCP management
DPC	Destination point code
LSN	Linkset name
OPC	Origination point code
SIO	Service information octet
SR	Screening reference name

Alarm Level

No alarm condition. The message is informational only.

Procedure

1. This indicates that a MSU was discarded because it failed screening. No action is necessary, unless the MSU should have passed. If the MSU should have passed (verified by the fields displayed in the above message), go to step 2.

2. Using the *rtrv-scr-sio* command, verify that the screening reference specified in the above message does not allow MSUs with the priority value indicated.

3. If the MSU should have passed screening, use the *chg-scr-sio* command to add the pri data to the screening reference.

1161 - GWS rcvd nonSNM DESTFLD screening msg

Description

This message indicates gateway screening (GWS) received a message that is not a MTP network management message. Affected Destination (DESTFLD) screening makes sense only for MTP Network Management (SNM) messages. When a non-SNM message is screened for Affected Destination, it is forced to pass screening and this message is generated.

Example

```
RLGHNCXA21W 00-04-18 18:59:58 EST  EAGLE 35.0.0
0105.1161 CARD 1103,A INFO GWS rcvd ISUP nonSNM DESTFLD screening msg
          SIO=0a   OPC= s-003-247-000  DPC= s-002-000-000
          DATA=12 34 56 78 90 12 34 56 78 90 12 34
               56 78 90 12 34 56 78 90 12 34 56 78
          SR=scrb  LSN=A1234567
```

Legend

DATA	Information from the upper layers of SCCP management
DPC	Destination point code
LSN	Linkset name
OPC	Origination point code
SIO	Service information octet
SR	Screening reference name

Alarm Level

No alarm condition. The message is informational only.

Procedure

1. No further action is necessary.

1162 - GWS rcvd nonSCCP CGPA/CDPA screen msg

Description

This message indicates that a message that was not a SCCP message passed CGPA/CDPA screening. CDPA or CGPA screening makes sense only for SCCP messages. When a non-SCCP message is screened for CDPA or CGPA, it is forced to pass screening and this message is generated

Example

```
RLGHNCXA21W 00-04-18 18:59:58 EST  EAGLE 35.0.0
0105.1162 CARD 1103,A INFO GWS rcvd nonSCCP CGPA/CDPA screen msg
          SIO=0a   OPC= s-003-247-000  DPC= s-002-000-000
          DATA=12 34 56 78 90 12 34 56 78 90 12 34
               56 78 90 12 34 56 78 90 12 34 56 78
          SR=scrb  LSN=A1234567
```

Legend

DATA	Information from the upper layers of SCCP management
DPC	Destination point code
LSN	Linkset name
OPC	Origination point code
SIO	Service information octet
SR	Screening reference name

Alarm Level

No alarm condition. The message is informational only.

Procedure

1. No further action is necessary.

1163 - GWS rcvd invalid GTI in TT screening

Description

This message indicates that a message that was not a SCCP message or an SCCP message that does not contain a TT passed the Allowed TT screening. Allowed TT screening makes sense only for SCCP messages that contain TT. When a non-SCCP message or a SCCP message that does not contain a TT is screened for Allowed TT, it is forced to pass screening and this message is generated.

Example

```
RLGHNCXA21W 00-04-18 18:59:58 EST  EAGLE 35.0.0
0105.1163   CARD 1103,A  INFO  GWS rcvd invalid GTI in TT screening
             SIO=0a   OPC=003-247-000  DPC=002-000-000
             DATA=12 34 56 78 90 12 34 56 78 90 12 34
                  56 78 90 12 34 56 78 90 12 34 56 78
             SR=scrb  LSN=A1234567
```

Alarm Level

No alarm condition. The message is informational only.

Legend

SIO: Service information octet

OPC: Origination point code

DPC: Destination point code

DATA: Information from the upper layers of SCCP management

SR: Screen name

LSN: Linkset name

Procedure

1. No further action is necessary.

1164 - Inh LNP SS request already outstanding

Description

An *inh-map-ss* command is already entered and queued.

Example

```
RLGHNCXA21W 00-02-07 12:01:43 EST  EAGLE 35.0.0
0014.1164   SYSTEM  INFO  Inh LNP SS request already outstanding
```

Alarm Level

No alarm condition. The message is informational only.

Procedure

1. No action necessary.

1165 - Failure Inhibiting LNP SS

Description

The *inh-map-ss* command did not take the LNP subsystem off-line.

Example

```
RLGHNCXA21W 00-02-07 12:01:43 EST  EAGLE 35.0.0
0014.1165   SYSTEM    INFO        Failure Inhibiting LNP SS
```

Alarm Level

No alarm condition. The message is informational only.

Procedure

1. Enter the *inh-map-ss* command with the force parameter.

1166 - ACG Node Overload Level Change

Description

The *SCM* has detected that the node overload level for the system has changed.

Example

```
RLGHNCXA21W 00-02-07 12:01:43 EST  EAGLE 35.0.0
0014.1166   SYSTEM    INFO        ACG Node Overload Level Change
           OLD ACG LEVEL= 0    NEW ACG LEVEL= 10
```

Alarm Level

No alarm condition. The message is informational only.

Procedure

1. No action necessary.

1167 - LNP database audit is disabled

Description

The LNP database audit has been disabled. The following example will be output every 60 minutes to all LNP terminals.

Example

```
RLGHNCXA21W 00-02-07 12:01:43 EST  EAGLE 35.0.0
0014.1167    SYSTEM      INFO    LNP database audit is disabled
```

Alarm Level

No alarm condition. The message is informational only.

Procedure

1. Enter the following command to restore the LNP audit

   chg-lnpopts:aud=on

1168 - Audit of LNP database completed

Description

The LNP database audit cycle has been completed.

Example

```
RLGHNCXA21W 00-02-07 12:01:43 EST  EAGLE 35.0.0
0014.1168    SYSTEM      Audit of LNP databases completed
```

Alarm Level

No alarm condition. The message is informational only.

Procedure

1. No action necessary.

1169 - SCCP rcvd inv TCAP portion

Description

SCCP received a message from the network that it could not route and was discarded because of an invalid transaction capabilities application part(TCAP).

Example

```
RLGHNCXA21W 00-04-18 19:02:12 EST  EAGLE 35.0.0
0113.1169    CARD 1103,A1  INFO   SCCP rcvd inv TCAP portion
             SIO=0a   OPC=   004-009-000  DPC=   002-000-000
             CDPA:  AI=10  SSN=005  TT=250
                    ADDR=ABCDEF1234567890ABCDE
             CGPA:  AI=12  PC=   001-001-001   SSN=002
             DATA=3a e2 38 c7 04 56 04 72 e0 e8 30 e9
                  2e cf 01 00 d0 02 83 01 f2 25 aa 0b
                  84 09 01 00 11 0a 19 49
             LSN=A1234567
```

Legend

SIO	Service information octet	OPC	Origination point code
DPC	Destination point code	CDPA	Called party address
AI	Address Indicator	SSN	Subsystem number
TT	Translation type	ADDR	Address
CGPA	Calling party address	PC	Point code
DATA	Hex dump of TCAP part of MSU	LSN	Linkset name

Alarm Level

No alarm condition. The message is informational only.

Procedure

1. This indicates that SCCP discarded a message because the TCAP provided in the called party address is invalid in the EAGLE 5 ISS. No action is necessary.

1170 - Loopback prevented

Description

This loopback requires the transmission of a byte oriented code. No byte oriented code was transmitted.

Example

```
RLGHNCXA21W 00-02-07 12:01:43 EST  EAGLE 35.0.0
0014.1170    CARD 1201   INFO   Loopback prevented
```

Alarm Level

No alarm condition. The message is informational only.

Procedure

1. Enter valid parameters when setting up loopback.

1171 - Loopback invalid

Description

The loopback setup was not performed because invalid parameters were provided.

Example

```
RLGHNCXA21W 00-02-07 12:01:43 EST  EAGLE 35.0.0
0014.1171    CARD 1201   INFO   Loopback invalid
```

Alarm Level

No alarm condition. The message is informational only.

Procedure

1. Enter valid parameters when setting up loopback.

1172 -REPT-OVSZMSG: MTP MSU too large to rte

Description

An oversized MTP MSU was received and discarded.

Example

```
RLGHNCXA21W 00-02-07 12:01:43 EST  EAGLE 35.0.0
0014.1172   CARD 1103   INFO   REPT-OVSZMSG: MTP MSU too large to rte
            LEN=279  SIO=03  DPC= s-001-001-001  OPC= s-002-002-002
            LSN=A1234657
```

Alarm Level

No alarm condition. The message is informational only.

Procedure

1. No action necessary.

1173 -REPT-OVSZMSG: SCCP MSU too large to rte

Description

An oversized SCCP MSU was received and discarded.

Example

```
RLGHNCXA21W 00-02-07 12:01:43 EST  EAGLE 35.0.0
0014.1173  CARD 1103,A2  INFO   REPT-OVSZMSG: SCCP MSU too large to rte
            LEN=279
            SIO=03    OPC=   002-002-002    DPC=   001-001-001
            SCCP MT=004
            CDPA:  AI=8B  PC=   003-003-003  SSN=005  TT=250
                   ADDR=ABCDEF0123456789ABCDE
            CGPA:  AI=8B  PC=   004-004-004  SSN=006  TT=251
                   ADDR=919460365512345678912
            LSN=A1234657
```

Legend

ADDR	Address	AI	Address Indicator
CDPA	Called party address	CGPA	Calling party address
DPC	Destination point code	LEN	Data length
LSN	Linkset name	OPC	Origination point code
PC	Point code	SCCP MT	SCCP message type
SIO	Service information octet	SSN	Subsystem number
TT	Translation type		

Alarm Level

No alarm condition. The message is informational only.

Procedure

1. No action necessary.

1174 - Inh Local SS request alrdy outstanding

Description

An *inh-map-ss* command is already entered and queued.

Example

```
RLGHNCXA21W 00-02-07 12:01:43 EST  EAGLE 35.0.0
0014.1174   SYSTEM  INFO  Inh Local SS request alrdy outstanding
```

Alarm Level

No alarm condition. The message is informational only.

Procedure

1. No action necessary.

1175 - Failure Inhibiting Local SS

Description

The *inh-map-ss* command did not take the local subsystem off-line.

Example

```
RLGHNCXA21W 00-02-07 12:01:43 EST  EAGLE 35.0.0
0014.1175   SYSTEM    INFO     Failure Inhibiting Local SS
```

Alarm Level

No alarm condition. The message is informational only.

Procedure

1. Enter the *inh-map-ss* command with the force parameter.

1177 - Cnvrsn Discard: SCCP MSU too large

Description

An SCCP MSU received was too large and discarded.

Example

```
RLGHNCXA21W 00-02-07 12:01:43 EST  EAGLE 35.0.0
0014.1177  CARD 1103,A2  INFO   Cnvrsn Discard: SCCP MSU too large
            LEN=279
            SIO=03    OPC=   002-002-002    DPC=   001-001-001
            SCCP MT=004
            CDPA:  AI=8B  PC=003-003-003  SSN=005  TT=250
                   ADDR=ABCDEF0123456789ABCDE
            CGPA:  AI=8B  PC   =004-004-004  SSN=006  TT=251
                   ADDR=919460365512345678912
            LSN=A1234657
```

Legend

ADDR	Address	AI	Address Indicator
CDPA	Called party address	CGPA	Calling party address
DPC	Destination point code	LEN	Data length
LSN	Linkset name	OPC	Origination point code
PC	Point code	SCCP MT	SCCP message type
SIO	Service information octet	SSN	Subsystem number
TT	Translation type		

Alarm Level

No alarm condition. The message is informational only.

Procedure

1. No action necessary.

1178 - Conversion Discard: Invalid SCCP msg type

Description

This message indicates the STP received a message type that has no equivalent in the opposite protocol.

Example

```
station5 00-04-18 19:12:00 EST  EAGLE 35.0.0
0110.1178   CARD 1205,B  INFO  Conversion Discard: Invalid SCCP msg type
            SIO=0e  OPC=   4-013-1      DPC=   1-003-0
            MSG TYPE=004
            LSN=A1234657
```

Legend

DPC	Destination point code
LSN	Linkset name
OPC	Origination point code
MSG TYPE	Message type (for example, connection request, connection confirm, connection refused)
SIO	Service information octet

Alarm Level

No alarm condition. The message is informational only.

Procedure

1. There is no immediate action needed, but the message indicates that the error was encountered.

1179 - Cnvrsn Discard: CGPA PC alias undefined

Description

An SCCP MSU contained an undefined CGPA PC and was discarded.

Example

```
RLGHNCXA21W 00-02-07 12:01:43 EST  EAGLE 35.0.0
0014.1179  CARD 1103,A2  INFO   Cnvrsn Discard: CGPA PC alias undefined
            LEN=279
            SIO=03    OPC=   002-002-002    DPC=   001-001-001
            SCCP MT=004
            CDPA:  AI=8B  PC=003-003-003  SSN=005  TT=250
                   ADDR=ABCDEF0123456789ABCDE
            CGPA:  AI=8B  PC   =004-004-004  SSN=006  TT=251
                   ADDR=919460365512345678912
            LSN=A1234657
```

Legend

ADDR	Address	AI	Address Indicator
CDPA	Called party address	CGPA	Calling party address
DPC	Destination point code	LEN	Data length
LSN	Linkset name	OPC	Origination point code
PC	Point code	SCCP MT	SCCP message type
SIO	Service information octet	SSN	Subsystem number
TT	Translation type		

Alarm Level

No alarm condition. The message is informational only.

Procedure

1. Perform one of the following actions:

- Enable the proper Discard CGPA PC STP Option, based on the network type of the incoming message. Refer to the *Database Administration Manual - Global Title Translation* for details.

  OR

- Add the proper alias for the Calling Party Point Code corresponding to the destination network. Refer to the *Database Administration Manual - Global Title Translation* for details.

1180 - Conversion Discard: Aft. PC alias undefined

Description

An SCCP MSU contained an undefined affected point code alias.The message was discarded.

Example

```
RLGHNCXA21W 00-04-18 19:04:15 EST  EAGLE 35.0.0
0124.1180   CARD 1106  INFO  Conversion Discard: Aft. PC alias undefined
             SIO=0a   OPC=004-031-000  DPC=000-071-000
             SCMG:    MSG TYPE=000         MSG LEN=003
                      AFTPC=004-219-000    AFTSS=000   MULT=000
             LSN=A1234567
```

Legend

AFTPC	Affected point code (for SCCP messages)
AFTSS	Affected subsystem (identifies the subsystem that failed)
DPC	Destination point code
LSN	Linkset name
MULT	SCCP management message multiplicity indicator
OPC	Origination point code
SCMG	SCCP management message
MSG LEN	Message length
MSG TYPE	Message type
SIO	Service information octet

Alarm Level

No alarm condition. The message is informational only.

Procedure

1. Add the proper alias for the Affected point code corresponding to the destination network. Refer to the *Database Administration Manual - Global Title Translation* for details.

1181 - Conversion Discard: Invalid SCMG msg type

Description

An SCCP MSU contained an invalid SCCP management message (SCMG) and was discarded

Example

```
RLGHNCXA21W 00-04-18 19:04:15 EST  EAGLE 35.0.0
0124.1181   CARD 1106  INFO   Conversion Discard: Invalid SCMG msg type
             SIO=0a   OPC=004-031-000  DPC=000-071-000
             SCMG:    MSG TYPE=000         MSG LEN=003
                      AFTPC=004-219-000    AFTSS=000   MULT=000
             LSN=A1234567
```

Legend

AFTPC	Affected point code (for SCCP messages)
AFTSS	Affected subsystem (identifies the subsystem that failed)
DPC	Destination point code
LSN	Linkset name
MULT	SCCP management message multiplicity indicator
OPC	Origination point code
SCMG	SCCP management message
MSG LEN	Message length
MSG TYPE	Message type
SIO	Service information octet

Alarm Level

No alarm condition. The message is informational only.

Procedure

1. No action necessary.

1182 - Cnvrsn Discard - Invalid TCAP element

Description

An invalid element has been detected.

Example

```
Station 1234 00-03-30 16:20:08 EST  EAGLE 35.0.0
0018.1182 - CARD 1103,A  INFO Cnvrsn Discard:Invalid TCAP element
   SIO=03 OPC=   001-001-001  DPC=   002-002-002
   LEN=037 SCCP MT=009
   CGPA: AI=C3 PC=   004-004-004  SSN=005  TT=053
         ADDR=ABCDEF0123456789ABCDE
   PKG=E2  CMPNT=EA OFFSET=030 EXPECTED=OA  ACTUAL=AO
   LSN=A1234567
```

Legend

ADDR	Address	AI	Address Indicator
CGPA	Calling party address	CMPNT	Component
DPC	Destination point code	LEN	Data length
LSN	Linkset name	OPC	Origination point code
PC	Point code	PKG	Package
SIO	Service information octet	SCCP MT	SCCP message type
TT	Translation type	SSN	Subsystem number

Alarm Level

No alarm condition. The message is informational only.

Procedure

1. No action necessary.

1183 - Cnvrsn Discard - Invalid TCAP elem’t len

Description

An element’s length of contents field has received an element that extends beyond the end of its container element.

Example

```
Station 1234 00-03-30 16:20:08 EST  EAGLE 35.0.0
0018.1183  CARD 1103,A   INFO Cnvrsn Discard: Invalid TCAP elem’t len
   SIO=03 OPC=   001-001-001  DPC=   002-002-002
   LEN=037 SCCP MT=009
    CGPA: AI=C3 PC=004-004-004  SSN=005  TT=053
          ADDR=ABCDEF0123456789ABCDE
   PKG=E2  CMPNT=EA OFFSET=030 EXPECTED=OA  ACTUAL=AO
   LSN=A1234567
```

Legend

ADDR	Address	AI	Address Indicator
CGPA	Calling party address	CMPNT	Component
DPC	Destination point code	LEN	Data length
LSN	Linkset name	OPC	Origination point code
PC	Point code	PKG	Package
SIO	Service information octet	SCCP MT	SCCP message type
TT	Translation type	SSN	Subsystem number

Alarm Level

No alarm condition. The message is informational only.

Procedure

1. No action necessary.

1184 - Cnvrsn Discard: Invalid SCCP elem’t len

Description

An element’s length of contents field has received an element that extends beyond the end of its container element.

Example

```
RLGHNCXA21W 00-02-07 12:01:43 EST  EAGLE 5 ISS 35.0.0
0014.1184  CARD 1103,A2  INFO   Cnvrsn Discard: Invalid SCCP elem’t len
           LEN=279
           SIO=03    OPC=   002-002-002    DPC=   001-001-001
           SCCP MT=004
           CDPA:  AI=8B  PC=   003-003-003  SSN=005  TT=250
                  ADDR=ABCDEF0123456789ABCDE
           CGPA:  AI=8B  PC=   004-004-004  SSN=006  TT=251
                  ADDR=919460365512345678912
           LSN=A1234657
```

Legend

ADDR	Address	AI	Address Indicator
CDPA	Called party address	CGPA	Calling party address
DPC	Destination point code	LEN	Data length
LSN	Linkset name	OPC	Origination point code
PC	Point code	SCCP MT	SCCP message type
SIO	Service information octet	SSN	Subsystem number
TT	Translation type		

Alarm Level

No alarm condition. The message is informational only.

Procedure

1. No action necessary.

1185 - GTI input clock anomalies detected

Description

This message indicates additional high speed clock diagnostic data is available although the high speed clocks are valid.

Example

```
RLGHNCXA21W 00-02-07 12:01:43 EST  EAGLE 35.0.0
0024.1185    HS CLOCK      INFO      GTI input clock anomalies detected
             Reporting TDM Location        : 1114
             GTI Status Register           : 0xA3
             Primary LIU Violation Count   : 200
             Secondary LIU Violation Count : 125
             Report Date:02-07-21  Time:16:20:19
```

Alarm Level

No alarm condition. The message is informational only.

Procedure

1. No action necessary.

1189 - SCCP did not Route - DPC not in RTE Table

Description

SCCP did not route a message because the destination point code (DPC) is not in the route (RTE) table. The message was discarded.

Example

```
tekelecstp 05-06-03 14:40:24 EST  UNKNOWN ??.?.?-55.35.0
0114.1189  CARD 1103,A1  SCCP did not Route - DPC not in RTE Table
           TRANSLATED PC=   1-012-1 TRANSLATED SS=006
           SCCP MSG TYPE=04
           CDPA:  NI=0 RI=0    GTI=04  SSNI=1  PCI=0
                  TT=007 NP=01 NAI=004 ADDR=123456789012345678901
                  PC=   -------- SSN=006
           CGPA:  NI=0 RI=0    GTI=04  SSNI=1  PCI=0
                  TT=007 NP=01 NAI=004 ADDR=987654321098765432109
                  PC=   -------- SSN=006
           LSN=A1234567  GTTSET=3 (8)
```

Legend

ADDR	Address	CDPA	Called party address
CGPA	Calling party address	GTI	Global title indicator
GTTSET	GTT Set Index	LSN	Linkset name
NAI	Nature of address indicator	NI	Network indicator value
NP	Numbering plan	PC	Point code
PCI	Point code indicator	RI	Routing indicator
SSN	Subsystem number	SSNI	Subsystem number indicator
TT	Translation type		
TRANSLATED PC	Translated point code		
TRANSLATED SS	Translated subsystem		

NOTE: If Global Title Translation is found, the GTTSET in which the translation is found appears. If Global Title Translation is not found, the GTTSET does not display.

Alarm Level

No alarm condition. The message is informational only.

Procedure

1. Check the absence of the DPC in the Routing table by entering rtrv-rte:dpci=2-12-1 (for dpca, or dpcn, or dpcn24, whichever is applicable).

2. If routing to this destination is required, provision the Routing table. See *Chapter 2 - Configuring Destination Tables - Adding a Destination Point Code* in the *Database Administration Manual - SS7*.

3. If routing to this destination is not required, remove the destination point code from the Routing table. See *Chapter 2 - Configuring Destination Tables - Removing a Destination Point Code* in the *Database Administration Manual - SS7*.

1190 - SCCP rcvd inv Clg Party - bad GT ind

Description

The SCCP received a message from the network that was discarded because of a bad global title indicator in the calling party address and that GTT on CGPA is required.

Example

```
RLGHNCXA21W 00-04-18 19:02:05 EST  EAGLE 35.0.0
0112.1190  CARD 1103,A1  INFO  SCCP rcvd inv Clg Party - bad GT ind
           SIO=03   OPC=   001-001-001     DPC=   002-002-002
           SCCP MSG TYPE=04
           CDPA:  NI=1  RI=0    GTI=04  SSNI=1  PCI=1
                  TT=250   NP=04  NAI=010  ADDR=123456789012345678901
                  PC=   003-003-003  SSN=005
           CGPA:  NI=1  RI=0    GTI=04  SSNI=1  PCI=1
                  TT=100   NP=07  NAI=012  ADDR=01234567890123456789O
                  PC=   001-001-001  SSN=004
           LSN=A1234567  GTTSET=3  203 46
```

Legend

ADDR	Address	CDPA	Called party address
CGPA	Calling party address	GTI	Global title indicator
GTTSET	GTT Set Index	LSN	Linkset name
NAI	Nature of address indicator	NI	Network indicator value
NP	Numbering plan	PC	Point code
PCI	Point code indicator	RI	Routing indicator
SSN	Subsystem number	SSNI	Subsystem number indicator
TT	Translation type		
TRANSLATED PC	Translated point code		
TRANSLATED SS	Translated subsystem		

NOTE: If Global Title Translation is found, the GTTSET in which the translation is found appears. If Global Title Translation is not found, the GTTSET does not display.

Alarm Level

No alarm condition. The message is informational only.

Procedure

1. No action is necessary.

1191 - SCCP rcvd inv Clg Party - bad Selectors

Description

The SCCP received a message from the network requiring CGPA GTT, but the Enhanced GTT could not find a CGPA GTT set using the CGPA GTT selectors from the message.

Example

```
RLGHNCXA21W 00-04-18 19:02:05 EST  EAGLE 35.0.0
0112.1191  CARD 1103,A1  INFO  SCCP rcvd inv Clg Party - bad Selectors
           SIO=03   OPC=   001-001-001     DPC=   002-002-002
           SCCP MSG TYPE=04
           CDPA:  NI=1  RI=0    GTI=04  SSNI=1  PCI=1
                  TT=250   NP=04  NAI=010  ADDR=123456789012345678901
                  PC=   003-003-003  SSN=005
           CGPA:  NI=1  RI=0    GTI=02 SSNI=1  PCI=1
                  TT=100   NP=07  NAI=012  ADDR=01234567890123456789O
                  PC=   001-001-001  SSN=004
           LSN=A1234567  GTTSET=3  203 46
```

Legend

ADDR	Address	CDPA	Called party address
CGPA	Calling party address	GTI	Global title indicator
GTTSET	GTT Set Index	LSN	Linkset name
NAI	Nature of address indicator	NI	Network indicator value
NP	Numbering plan	PC	Point code
PCI	Point code indicator	RI	Routing indicator
SSN	Subsystem number	SSNI	Subsystem number indicator
TT	Translation type		
TRANSLATED PC	Translated point code		
TRANSLATED SS	Translated subsystem		

NOTE: If Global Title Translation is found, the GTTSET in which the translation is found appears. If Global Title Translation is not found, the GTTSET does not display.

Alarm Level

No alarm condition. The message is informational only.

Procedure

1. This UIM indicates that Enhanced GTT was attempted, but the GTT selectors lookup failed. GTT selectors are GTI & TT (along with NP & NAI for ITU MSUs with GTI=4). If this MSU should have been routed, continue to Step 2.

2. Use the following command to check whether GTT selectors in the arrived MSU are provisioned in the GTTSEL table:

   rtrv=gttsel

3. If the GTTSEL table does not have an entry with the GTT selectors in the arrived MSU, use the following command to add a record with the GTT selectors in the arrived MSU to the GTTSEL table:

   ent-gttsel

1192 - SCCP translation found: XLAT=UDTS

Description

GTT is found with a UDTS action.

Example

```
station1234 99-08-30 16:28:08 EST EAGLE 35.0.0
    0018.1192 CARD 1103,A    INFO  SCCP translation found:XLAT=UDTS
                SIO=03   OPC=   001-001-001   DPC=   002-002-002
                SCCP MSG TYPE=04
                CDPA:  NI=1  RI=0    GTI=04  SSNI=1  PCI=1
                       TT=250   NP=04  NAI=010  ADDR=123456789012345678901
                       PC=   003-003-003  SSN=005
                CGPA:  NI=1  RI=0    GTI=04  SSNI=1  PCI=1
                       TT=100   NP=07  NAI=012  ADDR=01234567890123456789O
                       PC=   001-001-001  SSN=004
               LSN=A1234567  GTTSET=3 (8)
```

Legend

ADDR	Address	CDPA	Called party address
CGPA	Calling party address	GTI	Global title indicator
GTTSET	GTT Set Index	LSN	Linkset name
NAI	Nature of address indicator	NI	Network indicator value
NP	Numbering plan	PC	Point code
PCI	Point code indicator	RI	Routing indicator
SSN	Subsystem number	SSNI	Subsystem number indicator
TT	Translation type		
TRANSLATED PC	Translated point code		
TRANSLATED SS	Translated subsystem		

NOTE: If Global Title Translation is found, the GTTSET in which the translation is found appears. If Global Title Translation is not found, the GTTSET does not display.

Alarm Level

No alarm condition. The message is informational only.

Procedure

1. No action is necessary.

1193 - SCCP translation found: XLAT=DISC

Description

GTT is found with a DISCARD action.

Example

```
station1234 99-08-30 16:28:08 EST EAGLE 35.0.0
    0018.1193    CARD 1103,A    INFO  SCCP translation found:XLAT=DISC
                 SIO=03   OPC=   001-001-001   DPC=   002-002-002
                 SCCP MSG TYPE=04
                 CDPA:  NI=1  RI=0    GTI=04  SSNI=1  PCI=1
                        TT=250   NP=04  NAI=010  ADDR=123456789012345678901
                        PC=   003-003-003  SSN=005
                 CGPA:  NI=1  RI=0    GTI=04  SSNI=1  PCI=1
                        TT=100   NP=07  NAI=012  ADDR=01234567890123456789
                        PC=   001-001-001  SSN=004
               LSN=A1234567  GTTSET=3 (8)
```

Legend

ADDR	Address	CDPA	Called party address
CGPA	Calling party address	GTI	Global title indicator
GTTSET	GTT Set Index	LSN	Linkset name
NAI	Nature of address indicator	NI	Network indicator value
NP	Numbering plan	PC	Point code
PCI	Point code indicator	RI	Routing indicator
SSN	Subsystem number	SSNI	Subsystem number indicator
TT	Translation type		
TRANSLATED PC	Translated point code		
TRANSLATED SS	Translated subsystem		

NOTE: If Global Title Translation is found, the GTTSET in which the translation is found appears. If Global Title Translation is not found, the GTTSET does not display.

Alarm Level

No alarm condition. The message is informational only.

Procedure

1. No action is necessary.

1195 - SCCP did not route - DPC/SS not in mapset

Description

The SCCP did not route a message because the destination point code and destination subsystem was not in the mapset. The message was discarded.

Example

```
station1234 99-08-30 16:28:08 EST EAGLE 35.0.0
    0019.1195 CARD 1104,A    SCCP did not route - DPC/SS not in mapset
                TRANSLATED PC=003-003-003  TRANSLATED SS=005
                CDPA:  NI=1  RI=0    GTI=04  SSNI=1  PCI=1
                       TT=250   NP=04  NAI=010  ADDR=123456789012345678901
                       PC=   003-003-003  SSN=005
                CGPA:  NI=1  RI=0    GTI=04  SSNI=1  PCI=1
                       TT=100   NP=07  NAI=012  ADDR=01234567890123456789O
                       PC=   004-004-004  SSN=003
                LSN=A1234567  GTTSET=3 (8)
```

Legend

ADDR	Address	CDPA	Called party address
CGPA	Calling party address	GTI	Global title indicator
GTTSET	GTT Set Index	LSN	Linkset name
NAI	Nature of address indicator	NI	Network indicator value
NP	Numbering plan	PC	Point code
PCI	Point code indicator	RI	Routing indicator
SSN	Subsystem number	SSNI	Subsystem number indicator
TT	Translation type		
TRANSLATED PC	Translated point code		
TRANSLATED SS	Translated subsystem		

NOTE: If Global Title Translation is found, the GTTSET in which the translation is found appears. If Global Title Translation is not found, the GTTSET does not display.

Alarm Level

No alarm condition. The message is informational only.

Procedure

1. If the DPC/SS indicated in the message should not be routed to, no further action is necessary.

2. If the DPC/SS should be routed to from the EAGLE 5 ISS, use the following command to enter the DPC/SS into the mapset (obtained as outcome of GT translation, with which load sharing is desired) in the MAP table:

ent-map

1196 - IP Connection Congestion Timeout

Description

This UIM indicates an M3UA or SUA association on the IPGWx GPL has been congested for 30 seconds. At the end of the 30 second period, the congested association is moved to the out-of-service state. All traffic buffered for the association is discarded, at which time this UIM message is displayed.

To prevent a M3UA or a SUA association from remaining congested forever, a 30 second timer is started when an association becomes congested. A separate timer is started for each association that becomes congested.

Approximately one second after the traffic has been discarded, the association is automatically allowed to accept incoming requests to reestablish the association. The timer is not configurable and is not displayed.

Example

```
RLGHNCXA21W 00-02-07 12:01:43 EST  EAGLE 35.0.0
0003.1196    CARD 1213,A   INFO      IP Connection Congestion Timeout
             ANAME   = LONGASSOCNAME1
```

Legend

ANAME Long Association Name

Alarm Level

No alarm condition. The message is informational only.

Procedure

1. This is an informational message. No further action is necessary.

1197 - IP Connection refused

Description

Reports that an attempt to connect to an IP client was rejected by the client.

Example

```
RLGHNCXA03W 99-04-10 16:28:08 EST EAGLE 35.0.0
0003.1197    DCM 1213,A    IP Connection refused
             RIPADDR = 123.123.123.123
             RPORT = 1314
             LIPADDR = 123.123.123.124
             LPORT = 1315
             SNAME=Unknown
             Report Date: 02-04-10  Time: 16:27:19
```

Alarm Level

No alarm condition. The message is informational only.

Procedure

1. No action necessary.

Reports on connection status can be obtained for each DCM card with the following commands:

`pass:loc=xxxx:cmd="connmgr -l"` displays the connection manager event log.

`pass:loc=xxxx:cmd="connmgr -c"` displays socket client data.

`pass:loc=xxxx:cmd="connmgr -s"` displays socket server data.

1198 - IP Connection, Cannot resolve RHOST

Description

Reports that an attempt to connect to an IP client failed because the hostname could not be found on the IP network.

Example

```
RLGHNCXA03W 99-04-10 16:28:08 EST EAGLE 35.0.0
0003.1198    DCM 1213,A    IP connection, Cannot resolve RHOST
             RIPADDR = Unknown
             RPORT = 1314
             LIPADDR = 123.123.123.124
             LPORT = 1315
             SNAME=LONGSOCKETNAME1
             Report Date: 02-04-10  Time: 16:27:19
```

Alarm Level

No alarm condition. The message is informational only.

Procedure

1. No action necessary.

Reports on connection status can be obtained for each DCM card with the following commands:

`pass:loc=xxxx:cmd="connmgr -l"` displays the connection manager event log.

`pass:loc=xxxx:cmd="connmgr -c"` displays socket client data.

`pass:loc=xxxx:cmd="connmgr -s"` displays socket server data.

1199 - LNP DTH Measurements Discarded for DPC

Description

Reports that LNP DTH measurements are being discarded because the capacity of the SSP DTH table has been exceeded.

Example

```
RLGHNCXA03W 00-04-10 16:28:08 EST EAGLE 35.0.0
1234.1199    SYSTEM       INFO LNP DTH Measurements Discarded for DPC
                 DPC=   001-001-001
                 Non-Zero Measurements Discarded: Yes
```

Alarm Level

No alarm condition. The message is informational only.

Procedure

1. If the Non-Zero Measurements Discarded flag is set **No**, the discarded measurements are all zero, no action is necessary.

NOTE: If the Non-Zero Measurements Discarded flag is set Yes, Daily LNP Measurements will be lost for the specified DPC from the time of the LIM 1199 occurrence until the end of the day.

2. To retrieve the prior hour LNP SSP measurement pegs follow the procedure in “Hourly Maintenance Measurements” on page 4-95 of this manual. To retrieve the prior hour LNP measurements or other specific periods set the Accessible Collection Period: **Last or Specific**.

Example: rept-meas:type=mtch:enttye=lnp:period=last

1200 - INW ALT card as first to be preloaded

Description

Reports the alternate card the system selected to be loaded with GPLs and data.

Example

```
RLGHNCXA21W 00-02-07 12:01:43 EST  EAGLE 35.0.0
0014.1200   SYSTEM      INFO  INW ALT card as first to be preloaded
           CARD=1203   GPL=SS7ANSI
```

Alarm Level

No alarm condition. The message is informational only.

Procedure

1. No action necessary.

1201 - INW MAIN card as last to be reset

Description

Reports the main card the system selected to be loaded with GPLs and data.

Example

```
RLGHNCXA21W 00-02-07 12:01:43 EST  EAGLE 35.0.0
0014.1201   SYSTEM      INFO  INW MAIN card as last to be reset
           CARD=1203   GPL=SS7ANSI
```

Alarm Level

No alarm condition. The message is informational only.

Procedure

1. No action necessary.

1202 - INW Asserted DDL inhibition

Description

Reports that card cross loading is inhibited.

Example

```
RLGHNCXA21W 00-02-07 12:01:43 EST  EAGLE 35.0.0
0014.1202   SYSTEM      INFO  INW Asserted DDL inhibition
          CARD=1203   GPL=SS7ANSI
```

Alarm Level

No alarm condition. The message is informational only.

Procedure

1. No action necessary.

1203 - INW Card reset command issued

Description

Reports that a card reset command has been issued.

Example

```
RLGHNCXA21W 00-02-07 12:01:43 EST  EAGLE 35.0.0
0014.1203   SYSTEM      INFO  INW Card reset command issued
          CARD=1203   GPL=SS7ANSI
```

Alarm Level

No alarm condition. The message is informational only.

Procedure

1. No action necessary.

1204 - INW Waiting for card loading validation

Description

Reports that INW is waiting for validation of card loading.

Example

```
RLGHNCXA21W 00-02-07 12:01:43 EST  EAGLE 35.0.0
0014.1204   SYSTEM      INFO  INW Waiting for card loading validation
            CARD=1203   GPL=SS7ANSI
```

Alarm Level

No alarm condition. The message is informational only.

Procedure

1. No action necessary.

1205 - INW Detected card loaded

Description

Reports that INW has detected a successful completion of a card loading.

Example

```
RLGHNCXA21W 00-02-07 12:01:43 EST  EAGLE 35.0.0
0014.1205   SYSTEM      INFO  INW Detected card loaded
          CARD=1203   GPL=SS7ANSI
```

Alarm Level

No alarm condition. The message is informational only.

Procedure

1. No action necessary.

1206 - INW Detected card reset or removed

Description

Reports that INW has detected the reset or removal of a card.

Example

```
RLGHNCXA21W 00-02-07 12:01:43 EST  EAGLE 35.0.0
0014.1206   SYSTEM      INFO  INW Detected card reset or removed
           CARD=1203   GPL=SS7ANSI
```

Alarm Level

No alarm condition. The message is informational only.

Procedure

1. No action necessary.

1207 - INW Allowed card to skip DDL inhibited

Description

Reports that a card is being allowed to crossload.

Example

```
RLGHNCXA21W 00-02-07 12:01:43 EST  EAGLE 35.0.0
0014.1207   SYSTEM      INFO  INW Allowed card to skip DDL inhibited
            CARD=1203   GPL=SS7ANSI
```

Alarm Level

No alarm condition. The message is informational only.

Procedure

1. No action necessary

1208 - INW Removed DDL inhibition

Description

Reports that INW has removed the Dynamic Data Loading (DDL) inhibition on a card.

Example

```
RLGHNCXA21W 00-02-07 12:01:43 EST  EAGLE 35.0.0
0014.1208   SYSTEM      INFO  INW Removed DDL inhibition
          CARD=1203   GPL=SS7ANSI
```

Alarm Level

No alarm condition. The message is informational only.

Procedure

1. No action necessary.

1209 - INW Need to reset/remove/inhibit card

Description

Reports that card must be manually reset, removed, or inhibited.

Example

```
RLGHNCXA21W 00-02-07 12:01:43 EST  EAGLE 35.0.0
0014.1209   SYSTEM      INFO  INW Need to reset/remove/inhibit card
            CARD=1203   GPL=SS7ANSI
```

Alarm Level

No alarm condition. The message is informational only.

Procedure

1. No action necessary.

1210 - INW Card failed to reset

Description

Reports that card has failed to reset.

Example

```
RLGHNCXA21W 00-02-07 12:01:43 EST  EAGLE 35.0.0
0014.1210   SYSTEM      INFO  INW Card failed to reset
          CARD=1203   GPL=SS7ANSI
```

Alarm Level

No alarm condition. The message is informational only.

Procedure

1. No action necessary.

1211 - INW Failed to assert DDL inhibition

Description

Reports that a DDL inhibition has failed.

Example

```
RLGHNCXA21W 00-02-07 12:01:43 EST  EAGLE 35.0.0
0014.1211   SYSTEM      INFO  INW Failed to assert DDL inhibition
           CARD=1203   GPL=SS7ANSI
```

Alarm Level

No alarm condition. The message is informational only.

Procedure

1. No action necessary.

1212 - INW Failed to remove DDL inhibition

Description

Reports that an attempt to remove DDL inhibition has failed.

Example

```
RLGHNCXA21W 00-02-07 12:01:43 EST  EAGLE 35.0.0
0014.1212   SYSTEM      INFO  INW Failed to remove DDL inhibition
           CARD=1203   GPL=SS7ANSI
```

Alarm Level

No alarm condition. The message is informational only.

Procedure

1. No action necessary.

1213- INW Card failed to DDL crossload

Description

Reports that a card failed to DDL crossload.

Example

```
RLGHNCXA21W 00-02-07 12:01:43 EST  EAGLE 35.0.0
0014.   SYSTEM      INFO  INW Card failed to DDL crossload
           CARD=1203   GPL=SS7ANSI
```

Alarm Level

No alarm condition. The message is informational only.

Procedure

1. No action necessary.

1214 - INW Allowed card to DDL crossload

Description

Reports that a card was allowed to crossload.

Example

```
RLGHNCXA21W 00-02-07 12:01:43 EST  EAGLE 35.0.0
0014.1214   SYSTEM      INFO  INW Allowed card to DDL crossload
           CARD=1203   GPL=SS7ANSI
```

Alarm Level

No alarm condition. The message is informational only.

Procedure

1. No action necessary.

1215 - GWS rcvd CDPA that could not be CNCFd

Description

This message indicates the EAGLE 5 ISS received an MSU, with a called party address (CDPA) that is not allowed in gateway screening (GWS) and cannot be converted.

Example

```
RLGHNCXA21W 00-04-18 18:59:23 EST  EAGLE 35.0.0
0101.1215    CARD 1205,B  INFO   GWS rcvd CDPA that could not be CNCFd
         SIO=0a   OPC= s-003-244-000  DPC= s-000-071-000
         SCCP MT=  18
         CDPA:  AI=10  PC= s-003-003-003  SSN=005  TT=250
                ADDR=ABCDEF1234567890ABCDE
         CGPA:  AI=10  PC= s-004-004-004  SSN=005  TT=251
                ADDR=ABCDEF1234567890ABCDE
         SR=scrb     LSN=A1234567
```

NOTE: Four outputs are possible. The Legend includes abbreviations found in all variations.

Legend

ADDR	Address
AFTPC	Affected point code (for SCCP messages)
AFTSS	Affected subsystem (identifies the subsystem that failed)
AI	Address Indicator
CDPA	Called party address
CGPA	Calling party address
DATA	Information from the upper layers of SCCP management
DPC	Destination point code
H0H1	H0/H1 heading code
LSN	Linkset name
MULT	SCCP management message multiplicity indicator
OPC	Origination point code
PC	Point code
SCCP MT	SCCP message type
SCMG	SCCP management message
SIO	Service information octet
SR	Screening reference name
SSN	Subsystem number
TT	Translation type
TYPE	SCCP management message type

Alarm Level

No alarm condition. The message is informational only.

Procedure

1. If this called party address (CDPA) is one that should be converted, add the CDPA to the gateway screening (GWS) tables assigned to the link reporting this message. Use the *chg-scr-cdpa* command to add the CDPA to the list of allowed CDPA codes. Refer to the *Database Administration Manual - Gateway Screening* for instructions on adding a CDPA to GWS.

2. If the CDPA should not be converted, no action is necessary.

1216 - GWS rcvd CGPA that could not be CNCFd

Description

This message indicates the EAGLE 5 ISS received an MSU, with a calling party address (CGPA) that is not allowed in gateway screening (GWS) and cannot be converted.

Example

```
RLGHNCXA21W 00-04-18 18:59:23 EST  EAGLE 35.0.0
0101.1216    CARD 1205,B  INFO   GWS rcvd CGPA that could not be CNCFd
         SIO=0a   OPC= s-003-244-000  DPC= s-000-071-000
         SCCP MT=  18
         CDPA:  AI=10  PC= s-003-003-003  SSN=005  TT=250
                ADDR=ABCDEF1234567890ABCDE
         CGPA:  AI=10  PC= s-004-004-004  SSN=005  TT=251
                ADDR=ABCDEF1234567890ABCDE
         SR=scrb     LSN=A1234567
```

NOTE: Four outputs are possible. The Legend includes abbreviations found in all variations.

Legend

ADDR	Address
AFTPC	Affected point code (for SCCP messages)
AFTSS	Affected subsystem (identifies the subsystem that failed)
AI	Address Indicator
CDPA	Called party address
CGPA	Calling party address
DATA	Information from the upper layers of SCCP management
DPC	Destination point code
H0H1	H0/H1 heading code
LSN	Linkset name
MULT	SCCP management message multiplicity indicator
OPC	Origination point code
PC	Point code
SCCP MT	SCCP message type
SCMG	SCCP management message
SIO	Service information octet
SR	Screening reference name
SSN	Subsystem number
TT	Translation type
TYPE	SCCP management message type

Alarm Level

No alarm condition. The message is informational only.

Procedure

1. If this calling party address (CGPA) is one that should be converted, add the CGPA to the gateway screening (GWS) tables assigned to the link reporting this message. Use the *chg-scr-cgpa* command to add the CGPA to the list of allowed CGPA codes. Refer to the *Database Administration Manual - Gateway Screening* for instructions on adding a CGPA to GWS.

2. If the CGPA should not be converted, no action is necessary.

1217 - GWS rcvd AFTPC that could not be CNCFd

Description

This message indicates the EAGLE 5 ISS received an MSU, with an allowed affected point code (AFTPC) that is not allowed in gateway screening (GWS) and cannot be converted.

Example

```
RLGHNCXA21W 00-04-18 18:59:23 EST  EAGLE 35.0.0
0101.1217    CARD 1205,B  INFO   GWS rcvd AFTPC that could not be CNCFd
         SIO=0a   OPC= s-003-244-000  DPC= s-000-071-000
         SCCP MT=  18
         CDPA:  AI=10  PC= s-003-003-003  SSN=005  TT=250
                ADDR=ABCDEF1234567890ABCDE
         CGPA:  AI=10  PC= s-004-004-004  SSN=005  TT=251
                ADDR=ABCDEF1234567890ABCDE
         SR=scrb     LSN=A1234567
```

NOTE: Four outputs are possible. The Legend includes abbreviations found in all variations.

Legend

ADDR	Address
AFTPC	Affected point code (for SCCP messages)
AFTSS	Affected subsystem (identifies the subsystem that failed)
AI	Address Indicator
CDPA	Called party address
CGPA	Calling party address
DATA	Information from the upper layers of SCCP management
DPC	Destination point code
H0H1	H0/H1 heading code
LSN	Linkset name
MULT	SCCP management message multiplicity indicator
OPC	Origination point code
PC	Point code
SCCP MT	SCCP message type
SCMG	SCCP management message
SIO	Service information octet
SR	Screening reference name
SSN	Subsystem number
TT	Translation type
TYPE	SCCP management message type

Alarm Level

No alarm condition. The message is informational only.

Procedure

1. If this calling allowed affected point code (AFTPC) is one that should be converted, add the AFTPC to the gateway screening (GWS) tables assigned to the link reporting this message. Use the *chg-scr-aftpc* command to add the AFTPC to the list of allowed AFTPC codes. Refer to the *Database Administration Manual - Gateway Screening* for instructions on adding a AFTPC to GWS.

2. If the AFTPC should not be converted, no action is necessary.

1218 - GWS rcvd TT that could not be CNCFd

Description

This message indicates the EAGLE 5 ISS received an MSU, with a translation type (TT) that is not allowed in gateway screening (GWS) and cannot be converted.

Example

```
RLGHNCXA21W 00-04-18 18:59:23 EST  EAGLE 35.0.0
0101.1218    CARD 1205,B  INFO   GWS rcvd TT that could not be CNCFd
         SIO=0a   OPC= s-003-244-000  DPC= s-000-071-000
         SCCP MT=  18
         CDPA:  AI=10  PC=s  003-003-003  SSN=005  TT=250
                ADDR=ABCDEF1234567890ABCDE
         CGPA:  AI=10  PC=s  004-004-004  SSN=005  TT=251
                ADDR=ABCDEF1234567890ABCDE
         SR=scrb     LSN=A1234567
```

NOTE: Four outputs are possible. The Legend includes abbreviations found in all variations.

Legend

ADDR	Address
AFTPC	Affected point code (for SCCP messages)
AFTSS	Affected subsystem (identifies the subsystem that failed)
AI	Address Indicator
CDPA	Called party address
CGPA	Calling party address
DATA	Information from the upper layers of SCCP management
DPC	Destination point code
H0H1	H0/H1 heading code
LSN	Linkset name
MULT	SCCP management message multiplicity indicator
OPC	Origination point code
PC	Point code
SCCP MT	SCCP message type
SCMG	SCCP management message
SIO	Service information octet
SR	Screening reference name
SSN	Subsystem number
TT	Translation type
TYPE	SCCP management message type

Alarm Level

No alarm condition. The message is informational only.

Procedure

1. If this TT is one that should be converted, add the TT to the gateway screening (GWS) tables assigned to the link reporting this message. Use the *chg-scr-tt* command to add the TT to the list of allowed TT codes. Refer to the *Database Administration Manual - Gateway Screening* for instructions on adding a TT to GWS.

2. If this TT should not be converted, no action is necessary.

1219 - SCCP rcvd inv Cld Party - bad GT ind

Description

This message indicates that SCCP received a message from the network that was discarded because of a bad global title indicator in the called party address.

Example

```
station1234 99-08-30 16:28:08 EST EAGLE 35.0.0
    0018.1219    CARD 1103,A  INFO  SCCP rcvd inv Cld Party - bad GT ind
                 SIO=03   OPC=   001-001-001   DPC=   002-002-002
                 SCCP MSG TYPE=04
                 CDPA:  NI=1  RI=0    GTI=04  SSNI=1  PCI=1
                        TT=250   NP=04  NAI=010  ADDR=123456789012345678901
                        PC=   003-003-003  SSN=005
                 CGPA:  NI=1  RI=0    GTI=04  SSNI=1  PCI=1
                        TT=100   NP=07  NAI=012  ADDR=012345678901234567890
                        PC=   001-001-001  SSN=004
               LSN=A1234567  GTTSET=3  203 46
```

Legend

ADDR	Address	CDPA	Called party address
CGPA	Calling party address	GTI	Global title indicator
GTTSET	GTT Set Index	LSN	Linkset name
NAI	Nature of address indicator	NI	Network indicator value
NP	Numbering plan	PC	Point code
PCI	Point code indicator	RI	Routing indicator
SSN	Subsystem number	SSNI	Subsystem number indicator
TT	Translation type		
TRANSLATED PC	Translated point code		
TRANSLATED SS	Translated subsystem		

NOTE: If Global Title Translation is found, the GTTSET in which the translation is found appears. If Global Title Translation is not found, the GTTSET does not display.

Alarm Level

No alarm condition. The message is informational only.

Procedure

1. This indicates that SCCP received a message that was discarded because the global title field in the called party address was invalid in the EAGLE 5 ISS. No action is necessary.

1220 - SCCP rcvd inv Cld Party - bad network

Description

This message indicates that SCCP received a message from the network that it could not route and was discarded because of an invalid network indicator in the called party address.

Example

```
station1234 99-08-30 16:28:08 EST EAGLE 35.0.0
    0018.1220    CARD 1103,A  INFO  SCCP rcvd inv Cld Party - bad network
                 SIO=03   OPC=   001-001-001   DPC=   002-002-002
                 SCCP MSG TYPE=04
                 CDPA:  NI=1  RI=0    GTI=04  SSNI=1  PCI=1
                        TT=250   NP=04  NAI=010  ADDR=123456789012345678901
                        PC=   003-003-003  SSN=005
                 CGPA:  NI=1  RI=0    GTI=04  SSNI=1  PCI=1
                        TT=100   NP=07  NAI=012  ADDR=01234567890123456789O
                        PC=   001-001-001  SSN=004
               LSN=A1234567  GTTSET=3  203 46
```

Legend

ADDR	Address	CDPA	Called party address
CGPA	Calling party address	GTI	Global title indicator
GTTSET	GTT Set Index	LSN	Linkset name
NAI	Nature of address indicator	NI	Network indicator value
NP	Numbering plan	PC	Point code
PCI	Point code indicator	RI	Routing indicator
SSN	Subsystem number	SSNI	Subsystem number indicator
TT	Translation type		
TRANSLATED PC	Translated point code		
TRANSLATED SS	Translated subsystem		

NOTE: If Global Title Translation is found, the GTTSET in which the translation is found appears. If Global Title Translation is not found, the GTTSET does not display.

Alarm Level

No alarm condition. The message is informational only.

Procedure

1. This indicates that SCCP discarded a message because the network indicator (national or international) provided in the called party address is invalid in the EAGLE 5 ISS. Contact that node and inform them of the problem.

1221 - SCCP rcvd inv Cld Party - no SSN

Description

This message indicates that SCCP received a message from the network that it could not route and was discarded because no subsystem number was present in the called party address.

Example

```
station1234 99-08-30 16:28:08 EST EAGLE 35.0.0
    0018.1221    CARD 1103,A    INFO  SCCP rcvd inv Cld Party - no SSN
                 SIO=03   OPC=   001-001-001   DPC=   002-002-002
                 SCCP MSG TYPE=04
                 CDPA:  NI=1  RI=0    GTI=04  SSNI=1  PCI=1
                        TT=250   NP=04  NAI=010  ADDR=123456789012345678901
                        PC=   003-003-003  SSN=---
                 CGPA:  NI=1  RI=0    GTI=04  SSNI=1  PCI=1
                        TT=100   NP=07  NAI=012  ADDR=01234567890123456789O
                        PC=   001-001-001  SSN=004
               LSN=A1234567  GTTSET=3  203 46
```

Legend

ADDR	Address	CDPA	Called party address
CGPA	Calling party address	GTI	Global title indicator
GTTSET	GTT Set Index	LSN	Linkset name
NAI	Nature of address indicator	NI	Network indicator value
NP	Numbering plan	PC	Point code
PCI	Point code indicator	RI	Routing indicator
SSN	Subsystem number	SSNI	Subsystem number indicator
TT	Translation type		
TRANSLATED PC	Translated point code		
TRANSLATED SS	Translated subsystem		

NOTE: If Global Title Translation is found, the GTTSET in which the translation is found appears. If Global Title Translation is not found, the GTTSET does not display.

Alarm Level

No alarm condition. The message is informational only.

Procedure

1. The sender of the discarded message is using an invalid message format. If there is only one occurrence, no action is necessary. However, if the condition continues, there may be problem at the node that is sending the invalid message. Contact that node and inform them of the problem.

1222 - SCCP rcvd inv Cld Party - bad Selectors

Description

This UIM indicates that SCCP received a message from the network requiring GTT, but the Enhanced GTT could not find a GTT set using the GTT selectors from the message.

Example

```
station1234 99-08-30 16:28:08 EST EAGLE 35.0.0
    0018.1222    CARD 1103,A    INFO  SCCP rcvd inv Cld Party - bad Selectors
                 SIO=03   OPC=   001-001-001   DPC=   002-002-002
                 SCCP MSG TYPE=09
                 CDPA:  NI=1  RI=0    GTI=04  SSNI=1  PCI=1
                        TT=250   NP=04  NAI=010  ADDR=123456789012345678901
                        PC=   003-003-003  SSN=005
                 CGPA:  NI=1  RI=0    GTI=04  SSNI=1  PCI=1
                        TT=100   NP=07  NAI=012  ADDR=01234567890123456789O
                        PC=   001-001-001  SSN=004
               LSN=A1234567  GTTSET=3  203 46
```

Legend

ADDR	Address	CDPA	Called party address
CGPA	Calling party address	GTI	Global title indicator
GTTSET	GTT Set Index	LSN	Linkset name
NAI	Nature of address indicator	NI	Network indicator value
NP	Numbering plan	PC	Point code
PCI	Point code indicator	RI	Routing indicator
SSN	Subsystem number	SSNI	Subsystem number indicator
TT	Translation type		
TRANSLATED PC	Translated point code		
TRANSLATED SS	Translated subsystem		

NOTE: If Global Title Translation is found, the GTTSET in which the translation is found appears. If Global Title Translation is not found, the GTTSET does not display.

Alarm Level

No alarm condition. The message is informational only.

Procedure

1. This indicates that Enhanced GTT was attempted, but the GTT selectors lookup failed. GTT selectors are GTI & TT (along with NP & NAI for ITU MSUs with GTI=4). If this MSU should have been routed, continue to Step 2.

2. Use the following command to check whether GTT selectors in the arrived MSU are provisioned in GTTSEL table:

   rtrv=gttsel

3. If the GTTSEL table does not have an entry with the GTT selectors in the arrived MSU, use the following command to add a record with the GTT selectors in the arrived MSU to the GTTSEL table:

   ent-gttsel

1223 - SCCP did not route - bad translation

Description

This message indicates that SCCP did not route a message because it could not translate the global title. The message was discarded.

Example

```
station1234 99-08-30 16:28:08 EST EAGLE 35.0.0
    0018.1223    CARD 1103,A    INFO  SCCP did not route - bad translation
                 SIO=03   OPC=   001-001-001   DPC=   002-002-002
                 SCCP MSG TYPE=04
                 CDPA:  NI=1  RI=0    GTI=04  SSNI=1  PCI=1
                        TT=250   NP=04  NAI=010  ADDR=123456789012345678901
                        PC=   003-003-003  SSN=005
                 CGPA:  NI=1  RI=0    GTI=04  SSNI=1  PCI=1
                        TT=100   NP=07  NAI=012  ADDR=01234567890123456789O
                        PC=   001-001-001  SSN=004
               LSN=A1234567  GTTSET=3  203 46
```

Legend

ADDR	Address	CDPA	Called party address
CGPA	Calling party address	GTI	Global title indicator
GTTSET	GTT Set Index	LSN	Linkset name
NAI	Nature of address indicator	NI	Network indicator value
NP	Numbering plan	PC	Point code
PCI	Point code indicator	RI	Routing indicator
SSN	Subsystem number	SSNI	Subsystem number indicator
TT	Translation type		
TRANSLATED PC	Translated point code		
TRANSLATED SS	Translated subsystem		

NOTE: If Global Title Translation is found, the GTTSET in which the translation is found appears. If Global Title Translation is not found, the GTTSET does not display.

Alarm Level

No alarm condition. The message is informational only.

Procedure

1. Enter the following command to verify the global title:

rtrv-gtt:type=x:gta=yyyyyyyyyyyyyyyyyyyy

where: *x* = SCCP message type

yyyyyyyyyyyyyyyyyyyy = cdpa address

2. If the global title is valid, refer to the *Database Administration Manual - Global Title Translation* to update the database.

If the message was correctly discarded, no action is necessary.

1224 - SCCP rcvd inv LSS - bad SSN

Description

This message indicates that SCCP received a message destined to a local subsystem that was discarded because of a bad subsystem number (SSN).

Example

```
station1234 99-08-30 16:28:08 EST EAGLE 35.0.0
    0018.1224    CARD 1103,A  INFO  SCCP rcvd inv LSS - bad SSN
                 SIO=03   OPC=   001-001-001   DPC=   002-002-002
                 SCCP MSG TYPE=04
                 CDPA:  NI=1  RI=0    GTI=04  SSNI=1  PCI=1
                        TT=250   NP=04  NAI=010  ADDR=123456789012345678901
                        PC=   003-003-003  SSN=005
                 CGPA:  NI=1  RI=0    GTI=04  SSNI=1  PCI=1
                        TT=100   NP=07  NAI=012  ADDR=012345678901234567890
                        PC=   001-001-001  SSN=004
               LSN=A1234567  GTTSET=3  203 46
```

Legend

ADDR	Address	CDPA	Called party address
CGPA	Calling party address	GTI	Global title indicator
GTTSET	GTT Set Index	LSN	Linkset name
NAI	Nature of address indicator	NI	Network indicator value
NP	Numbering plan	PC	Point code
PCI	Point code indicator	RI	Routing indicator
SSN	Subsystem number	SSNI	Subsystem number indicator
TT	Translation type		
TRANSLATED PC	Translated point code		
TRANSLATED SS	Translated subsystem		

NOTE: If Global Title Translation is found, the GTTSET in which the translation is found appears. If Global Title Translation is not found, the GTTSET does not display.

Alarm Level

No alarm condition. The message is informational only.

Procedure

1. The EAGLE 5 ISS only supports subsystem 1. All other local subsystem numbers are invalid. Contact that node and inform them of the problem. No further action is necessary.

1225 - SCCP did not route - DPC OOS

Description

This message indicates that SCCP did not route a message because the destination point code (DPC) was out-of-service (OOS). The message was discarded This output is generated for ITU applications (EIR, INP, G-Port, or G-Flex).

Example

```
station1234 99-08-30 16:28:08 EST EAGLE 35.0.0
    0019.1225    CARD 1104,A    SCCP did not route - DPC OOS
                 TRANSLATED PC=003-003-003  TRANSLATED SS=005
                 CDPA:  NI=1  RI=0    GTI=04  SSNI=1  PCI=1
                        TT=250   NP=04  NAI=010  ADDR=123456789012345678901
                        PC=   003-003-003  SSN=005
                 CGPA:  NI=1  RI=0    GTI=04  SSNI=1  PCI=1
                        TT=100   NP=07  NAI=012  ADDR=01234567890123456789O
                        PC=   004-004-004  SSN=003
               LSN=A1234567  GTTSET=3 (8)
```

Legend

ADDR	Address	CDPA	Called party address
CGPA	Calling party address	GTI	Global title indicator
GTTSET	GTT Set Index	LSN	Linkset name
NAI	Nature of address indicator	NI	Network indicator value
NP	Numbering plan	PC	Point code
PCI	Point code indicator	RI	Routing indicator
SSN	Subsystem number	SSNI	Subsystem number indicator
TT	Translation type		
TRANSLATED PC	Translated point code		
TRANSLATED SS	Translated subsystem		

NOTE: If Global Title Translation is found, the GTTSET in which the translation is found appears. If Global Title Translation is not found, the GTTSET does not display.

Alarm Level

No alarm condition. The message is informational only.

Procedure

1. Check the route and linksets by entering the *rept-stat-dstn* and *rept-stat-ls* commands.

2. Verify the link status using the *rept-stat-slk* command. For example, enter:

*rept-stat-slk:loc=**xxxx**:port=b*

where ***xxxx*** is the card location.

Following is an example of the output:

```
RLGHNCXA03W 00-09-27 17:00:36 EST  EAGLE 35.0.0
SLK     LSN          CLLI         PST           SST        AST
1201,B  nsp1         ls02clli     OOS-MT        Unavail     ----
   ALARM STATUS       =  No alarm
   UNAVAIL REASON     =  FL NA LI RI
Command Completed.
```

---

3. Check the UNAVAIL REASON field in the output of the *rept-stat-slk* command. Following is an explanation of the UNAVAIL REASON codes:

FL - The signaling link has a fault.

NA - The signaling link is not aligned.

LI - The signaling link has been inhibited locally.

RI - The signaling link has been inhibited remotely.

LB - The signaling link has been blocked locally.

RB - The signaling link has been blocked remotely.

FC - The signaling link is unavailable because of false congestion.

RD(xx.xxx) - The signaling link is unavailable because of a restart delay to prevent signaling link oscillation. The number in parentheses indicates the amount of time, in seconds, remaining in the restart delay period. The link is restarted automatically after this amount of time has elapsed.

---

4. If the UNAVAIL REASON indicates an alignment problem or fault, activate a loopback using the *act-lpb* command, or use a physical loopback. (For a V.35, you must use an appropriate physical V.35 loopback.) If the signaling link aligns, contact the far-end to correct the problem.

---

5. If the UNAVAIL REASON still indicates an alignment problem or fault, check the status of the card by entering the *rept-stat-card* command for the specified card.

---

6. If the *rept-stat-card* command indicates a problem with the card, reset the card by entering the *init-card* command with the specified card location. If the card does not come up and links align, try first reseating the card, then replacing the card (using the card replacement procedures in Appendix A, *Card Removal/Replacement Procedures*).

---

7. If the UNAVAIL REASON indicates a locally inhibited link, enter the *unhb-slk* command with the specified card location.

---

8. If the UNAVAIL REASON indicates a locally blocked link, enter the *ublk-slk* command with the specified card location.

---

9. Otherwise, this indicates a failure at the distant node. Routing to this node has been halted as a result of network management. Maintenance personnel should be aware of the OOS condition, but no action is necessary. Monitor the links to the DPC and verify the DPC status changes to IS-NR (In-Service - Normal).

1226 - SCCP did not route - DPC congested

Description

This message indicates that SCCP did not route a message because the destination point code (DPC) was congested. The message was discarded. This output is generated for ITU applications (EIR, INP, G-Port, or G-Flex).

Example

```
station1234 99-08-30 16:28:08 EST EAGLE 35.0.0
    0019.1226    CARD 1104,A    SCCP did not route - DPC congested
                 TRANSLATED PC=003-003-003  TRANSLATED SS=005
                 CDPA:  NI=1  RI=0    GTI=04  SSNI=1  PCI=1
                        TT=250   NP=04  NAI=010  ADDR=123456789012345678901
                        PC=   003-003-003  SSN=005
                 CGPA:  NI=1  RI=0    GTI=04  SSNI=1  PCI=1
                        TT=100   NP=07  NAI=012  ADDR=012345678901234567890
                        PC=   004-004-004  SSN=003
               LSN=A1234567  GTTSET=3 (8)
```

Legend

ADDR	Address	CDPA	Called party address
CGPA	Calling party address	GTI	Global title indicator
GTTSET	GTT Set Index	LSN	Linkset name
NAI	Nature of address indicator	NI	Network indicator value
NP	Numbering plan	PC	Point code
PCI	Point code indicator	RI	Routing indicator
SSN	Subsystem number	SSNI	Subsystem number indicator
TT	Translation type		
TRANSLATED PC	Translated point code		
TRANSLATED SS	Translated subsystem		

NOTE: If Global Title Translation is found, the GTTSET in which the translation is found appears. If Global Title Translation is not found, the GTTSET does not display.

Alarm Level

No alarm condition. The message is informational only.

Procedure

1. This indicates an SCCP message was discarded due to congestion at a distant node. Maintenance personnel should monitor the network and verify the nodes congestion status changes to zero (no congestion).

NOTE: A transfer controlled (TFC) should have been received on the link to indicate congestion to this node. When the congestion status changes, the congestion status indicator in the flow control messages will indicate what message type priorities can be transmitted to the distant node. If the condition persists, follow normal company procedures in dealing with congestion at distant nodes.

1227 - SCCP did not route - DPC not in MAP tbl

Description

This message indicates that SCCP did not route a message because the destination point code was not in the mated application (MAP) table. The message was discarded. This output is generated for ITU applications (EIR, INP, G-Port, or G-Flex).

Example

```
station1234 99-08-30 16:28:08 EST EAGLE 35.0.0
    0019.1227    CARD 1104,A    SCCP did not route - DPC not in MAP tbl
                 TRANSLATED PC=003-003-003  TRANSLATED SS=005
                 CDPA:  NI=1  RI=0    GTI=04  SSNI=1  PCI=1
                        TT=250   NP=04  NAI=010  ADDR=123456789012345678901
                        PC=   003-003-003  SSN=005
                 CGPA:  NI=1  RI=0    GTI=04  SSNI=1  PCI=1
                        TT=100   NP=07  NAI=012  ADDR=012345678901234567890
                        PC=   004-004-004  SSN=003
               LSN=A1234567  GTTSET=3 (8)
```

Legend

ADDR	Address	CDPA	Called party address
CGPA	Calling party address	GTI	Global title indicator
GTTSET	GTT Set Index	LSN	Linkset name
NAI	Nature of address indicator	NI	Network indicator value
NP	Numbering plan	PC	Point code
PCI	Point code indicator	RI	Routing indicator
SSN	Subsystem number	SSNI	Subsystem number indicator
TT	Translation type		
TRANSLATED PC	Translated point code		
TRANSLATED SS	Translated subsystem		

NOTE: If Global Title Translation is found, the GTTSET in which the translation is found appears. If Global Title Translation is not found, the GTTSET does not display.

Alarm Level

No alarm condition. The message is informational only.

Procedure

1. If the DPC that is indicated in the message should not be routed to, no further action is necessary.

2. If the DPC should be routed to from the EAGLE 5 ISS, refer to the *Commands Manual* and use the *ent-map* command to enter the DPC into the mated application (MAP) table.

1228 - SCCP did not route - SS OOS

Description

This message indicates that SCCP did not route a message because the destination subsystem (SSN) was Out-of -Service. The message was discarded.This output is generated for ITU applications (EIR, INP, G-Port, or G-Flex).

Example

```
station1234 99-08-30 16:28:08 EST EAGLE 35.0.0
    0019.1228    CARD 1104,A    SCCP did not route - SS OOS
                 TRANSLATED PC=003-003-003  TRANSLATED SS=005
                 CDPA:  NI=1  RI=0    GTI=04  SSNI=1  PCI=1
                        TT=250   NP=04  NAI=010  ADDR=123456789012345678901
                        PC=   003-003-003  SSN=005
                 CGPA:  NI=1  RI=0    GTI=04  SSNI=1  PCI=1
                        TT=100   NP=07  NAI=012  ADDR=012345678901234567890
                        PC=   004-004-004  SSN=003
               LSN=A1234567  GTTSET=3 (8)
```

Legend

ADDR	Address	CDPA	Called party address
CGPA	Calling party address	GTI	Global title indicator
GTTSET	GTT Set Index	LSN	Linkset name
NAI	Nature of address indicator	NI	Network indicator value
NP	Numbering plan	PC	Point code
PCI	Point code indicator	RI	Routing indicator
SSN	Subsystem number	SSNI	Subsystem number indicator
TT	Translation type		
TRANSLATED PC	Translated point code		
TRANSLATED SS	Translated subsystem		

NOTE: If Global Title Translation is found, the GTTSET in which the translation is found appears. If Global Title Translation is not found, the GTTSET does not display.

Alarm Level

No alarm condition. The message is informational only.

Procedure

1. This message indicates that an MSU was discarded because the DPC SSN that it was addressed to is out-of-service (OOS). Contact the distant end node that this message refers to and verify that action is being taken to bring the SCCP back into service.

1229 - SCCP did not route - SS congested

Description

This message indicates that SCCP did not route a message because the subsystem was congested. The message was discarded.This output is generated for ITU applications (EIR, INP, G-Port, or G-Flex).

Example

```
station1234 99-08-30 16:28:08 EST EAGLE 35.0.0
    0019.1229    CARD 1104,A    SCCP did not route - SS congested
                 TRANSLATED PC=003-003-003  TRANSLATED SS=005
                 CDPA:  NI=1  RI=0    GTI=04  SSNI=1  PCI=1
                        TT=250   NP=04  NAI=010  ADDR=123456789012345678901
                        PC=   003-003-003  SSN=005
                 CGPA:  NI=1  RI=0    GTI=04  SSNI=1  PCI=1
                        TT=100   NP=07  NAI=012  ADDR=012345678901234567890
                        PC=   004-004-004  SSN=003
               LSN=A1234567  GTTSET=3 (8)
```

Legend

ADDR	Address	CDPA	Called party address
CGPA	Calling party address	GTI	Global title indicator
GTTSET	GTT Set Index	LSN	Linkset name
NAI	Nature of address indicator	NI	Network indicator value
NP	Numbering plan	PC	Point code
PCI	Point code indicator	RI	Routing indicator
SSN	Subsystem number	SSNI	Subsystem number indicator
TT	Translation type		
TRANSLATED PC	Translated point code		
TRANSLATED SS	Translated subsystem		

NOTE: If Global Title Translation is found, the GTTSET in which the translation is found appears. If Global Title Translation is not found, the GTTSET does not display.

Alarm Level

No alarm condition. The message is informational only.

Procedure

1. This indicates an SCCP message was discarded due to congestion at a subsystem. Maintenance personnel should monitor the network and verify the subsystems congestion status changes to zero (no congestion).

NOTE: A transfer controlled (TFC) should have been received on the link to indicate congestion to this node. When the congestion status changes, the congestion status indicator in the flow control messages will indicate what message type priorities can be transmitted to the distant node. If the condition persists, follow normal company procedures in dealing with congestion at distant nodes.

1230 - SCCP did not route - SS not in MAP tbl

Description

This message indicates that SCCP did not route a message because the destination subsystem was not in the Mated Application (MAP) table. The message was discarded. This output is generated for ITU applications (EIR, INP, G-Port, or G-Flex).

Example

```
station1234 99-08-30 16:28:08 EST EAGLE 35.0.0
    0019.1230    CARD 1104,A    SCCP did not route - SS not in MAP tbl
                 TRANSLATED PC=003-003-003  TRANSLATED SS=005
                 CDPA:  NI=1  RI=0    GTI=04  SSNI=1  PCI=1
                        TT=250   NP=04  NAI=010  ADDR=123456789012345678901
                        PC=   003-003-003  SSN=005
                 CGPA:  NI=1  RI=0    GTI=04  SSNI=1  PCI=1
                        TT=100   NP=07  NAI=012  ADDR=012345678901234567890
                        PC=   004-004-004  SSN=003
               LSN=A1234567  GTTSET=3 (8)
```

Legend

ADDR	Address	CDPA	Called party address
CGPA	Calling party address	GTI	Global title indicator
GTTSET	GTT Set Index	LSN	Linkset name
NAI	Nature of address indicator	NI	Network indicator value
NP	Numbering plan	PC	Point code
PCI	Point code indicator	RI	Routing indicator
SSN	Subsystem number	SSNI	Subsystem number indicator
TT	Translation type		
TRANSLATED PC	Translated point code		
TRANSLATED SS	Translated subsystem		

NOTE: If Global Title Translation is found, the GTTSET in which the translation is found appears. If Global Title Translation is not found, the GTTSET does not display.

Alarm Level

No alarm condition. The message is informational only.

Procedure

1. If the subsystem indicated in the message is not a mated application to the EAGLE 5 ISS, no further action is necessary.

2. If the SCCP message should have been routed, refer to the *Commands Manual* and use the *ent-map* command to add the subsystem number to the mated application (MAP) table.

1231 - SCCP Encode Failure

Description

This message indicates that there is an SCCP encode failure.

Example

```
RLGHNCXA21W 00-04-18 19:02:47 EST  EAGLE 35.0.0
0115.1231    CARD 1103,A  INFO   SCCP Encode Failure
             SIO=03   OPC=   001-001-001  DPC=   002-002-002
             CDPA LENGTH=000   MSG TYPE=04
             CDPA: AI=10 PC=   003-003-003 SSN=005 TT=250
             ADDR=12345678901234567890
             LSN=A1234567
```

Legend

SIO	Service information octet	OPC	Origination point code
DPC	Destination point code	CDPA Length	Called party address length
AI	Address Indicator	SSN	Subsystem number
TT	Translation type	ADDR	Address
CGPA	Calling party address	PC	Point code
LSN	Linkset name	MSG TYPE	Message type

Alarm Level

No alarm condition. The message is informational only.

Procedure

1. Contact the distant end node this message refers to and verify action is being taken to correct the SCCP encode failure problem.

1232 - SCCP Encode Failure

Description

This message indicates that there is an SCCP encode failure.

Example

```
station1234 99-08-30 16:28:08 EST EAGLE 35.0.0
    0018.1232    CARD 1103,A    INFO  SCCP Encode Failure
                 SIO=03   OPC=   001-001-001   DPC=   002-002-002
                 SCCP MSG TYPE=04
                 CDPA:  NI=1  RI=0    GTI=04  SSNI=1  PCI=1
                        TT=250   NP=04  NAI=010  ADDR=123456789012345678901
                        PC=   003-003-003  SSN=005
                 CGPA:  NI=1  RI=0    GTI=04  SSNI=1  PCI=1
                        TT=100   NP=07  NAI=012  ADDR=01234567890123456789
                        PC=   001-001-001  SSN=004
               LSN=A1234567  GTTSET=3  203 46
```

Legend

ADDR	Address	CDPA	Called party address
CGPA	Calling party address	GTI	Global title indicator
GTTSET	GTT Set Index	LSN	Linkset name
NAI	Nature of address indicator	NI	Network indicator value
NP	Numbering plan	PC	Point code
PCI	Point code indicator	RI	Routing indicator
SSN	Subsystem number	SSNI	Subsystem number indicator
TT	Translation type		
TRANSLATED PC	Translated point code		
TRANSLATED SS	Translated subsystem		

NOTE: If Global Title Translation is found, the GTTSET in which the translation is found appears. If Global Title Translation is not found, the GTTSET does not display.

Alarm Level

No alarm condition. The message is informational only.

Procedure

1. Contact the distant end node this message refers to and verify action is being taken to correct the SCCP encode failure problem.

1233 - MTP Invalid ITU TFR RCVD

Description

This message indicates an ITU TFR (Transfer Restricted) procedure was received on a linkset that is not configured to receive these procedures.

Example

```
RLGHNCXA21W 00-11-18 19:12:00 EST  EAGLE 35.0.0
0147.1233    CARD 1201,A  INFO   MTP Invalid ITU TFR RCVD
             OPC=   001-001-001  CPC=   002-002-002
             LSN=lsn01a
```

Legend

CPC	Concerned point code
LSN	Linkset name
OPC	Origination point code

Alarm Level

No alarm condition. The message is informational only.

Procedure

1. Verify whether the MTP (Message Transfer Part) is supposed to support an ITU TFR on the linkset on which it was received. The ITU TFR procedure is valid for ITU national linksets only. As currently configured, the linkset does not accept TFRs.

2. If ITU TFRs are to be accepted on the linkset, you must reconfigure the linkset to accept them. Use the *itutfr=on* parameter in the *chg-ls* command to enable the transfer restricted procedure. You must specify this parameter on each ITU national linkset you want to receive ITU TFRs.

1234 - LNP Day Meas. Discarded for NPANXX

Description

This message is indicates that the Daily LNP NPANXX measurement counts are incorrect because of discards due to provisioning.

Example

```
station5 00-04-18 19:12:00 EST  EAGLE 35.0.0
0002.1234   CARD 1201   INFO  LNP Day Meas. Discarded for NPANXX
```

Alarm Level

No alarm condition. The message is informational only.

Procedure

1. Correct counts can be derived via calculation from LNP queries - discards - LRN pegs.

1237 - Dynamic database audit not current

Description

The dynamic database audit has detected that checksums are inconsistent. This means that one or more cards do not concur with the current network configuration.

Example

```
RLGHNCXA21W 00-02-07 12:01:43 EST  EAGLE 35.0.0
0014.1237   SYSTEM  INFO  Dynamic database audit not current
```

Alarm Level

No alarm condition. The message is informational only.

Procedure

1. No action necessary.

1238 - Full LNP database reload initiated

Description

This message indicates that a cold restart is required for a TSM/BLM card. In this case, the entire LNP database is reloaded to the card.

Example

```
station1234 96-08-01 16:28:08 EST EAGLE 35.0.0
1234.1238    SYSTEM       INFO  Full LNP database reload initiated:
             CARD=1101    GPL=SCCP    CAUSE=<xxxxxxxx>
```

where <xxxxxxxx> is one of the following parameters:

Parameter	Description
XILINX	M256 Xilinx version has changed.
POWER ON	Power on reset.
DB VER	LNP database version has changed.
DB LVL	Database level is not supported or difference exceeds incremental loading capability.
HW ERR	Hardware error bit checks on the card fail.
CHECKSUM	Checksum comparisons of the LNP database fail.
NO AUDIT	Unable to perform LNP DB audit. LNP audit not on or excessive number of unknown checksums.
USER REQ	User initiated init-card or init-sys command reload type cold.
OTHER	Other or unknown.

Alarm Level

No alarm condition. The message is informational only.

Procedure

1. If this UIM indicates that there is a hardware error or the database checksum test failed, there may be a hardware problem. When this condition repeats (the board resets and displays the same conditions again), do the following:
   a. Reseat the card.
   b. Replace the card to determine if it is defective.

2. For additional support, contact Tekelec Technical Services at the appropriate number.
   Reference: “Customer Care Center” on page 1-13.

1239 - LNP updates inhibited:loading mode stability

Description

This message indicates that LNP updates are being inhibited until the download sequence for a card or group of cards completes.

Example

```
station1234 96-08-01 16:28:08 EST EAGLE 35.0.0
1234.1239    SYSTEM       INFO DB updates inhibited:loading stability
```

Alarm Level

No alarm condition. The message is informational only.

Procedure

1. This is an automatic process and no action is necessary.

1240 - LNP updates allowed:loading mode stability

Description

This message indicates that the download sequence for a card or group of cards is completed and the LNP updates are allowed.

Example

```
station1234 96-08-01 16:28:08 EST EAGLE 35.0.0
1234.1240    SYSTEM       INFO DB updates allowed:loading stability
```

Alarm Level

No alarm condition. The message is informational only.

Procedure

1. This is an automatic process and no action is necessary.

1241 - LNP Incremental Loading

Description

This message indicates the progress in downloading the LNP database information to the applicable card or cards.

Example

```
tekelecstp 00-04-24 06:54:41 EST EAGLE 35.0.0
5402.1241    SYSTEM       INFO  REPT EVT: LNP Incremental Loading.
             Database levels loaded :     0 of  1143
             Card List: 1101
```

Alarm Level

No alarm condition. The message is informational only.

Procedure

1. No corrective action is required.

1242 - Conv to intl num - Dflt CC not found

Description

This message indicates that the default country code is not defined.

Example

```
station1234 99-08-30 16:28:08 EST EAGLE 35.0.0
    0018.1242 CARD 1103,A    INFO  Conv to intl num - Dflt CC not found
                SIO=03   OPC=   001-001-001   DPC=   002-002-002
                SCCP MSG TYPE=04
                CDPA:  NI=1  RI=0    GTI=04  SSNI=1  PCI=1
                       TT=250   NP=04  NAI=010  ADDR=123456789012345678901
                       PC=   003-003-003  SSN=005
                CGPA:  NI=1  RI=0    GTI=04  SSNI=1  PCI=1
                       TT=100   NP=07  NAI=012  ADDR=012345678901234567890
                       PC=   001-001-001  SSN=004
              LSN=A1234567  GTTSET=3  203 46
```

Legend

ADDR	Address	CDPA	Called party address
CGPA	Calling party address	GTI	Global title indicator
GTTSET	GTT Set Index	LSN	Linkset name
NAI	Nature of address indicator	NI	Network indicator value
NP	Numbering plan	PC	Point code
PCI	Point code indicator	RI	Routing indicator
SSN	Subsystem number	SSNI	Subsystem number indicator
TT	Translation type		
TRANSLATED PC	Translated point code		
TRANSLATED SS	Translated subsystem		

NOTE: If Global Title Translation is found, the GTTSET in which the translation is found appears. If Global Title Translation is not found, the GTTSET does not display.

Alarm Level

No alarm condition. The message is informational only.

Procedure

1. Define the default CC using the *chg-stpopts:defcc* command. Refer to the *Commands Manual* for the proper usage.

1243 - Conv to intl num - Dflt NC not found

Description

This message indicates that the default network destination code is not defined.

Example

```
station1234 99-08-30 16:28:08 EST EAGLE 35.0.0
    0018.1243 CARD 1103,A    INFO  Conv to intl num - Dflt NC not found
                SIO=03   OPC=   001-001-001   DPC=   002-002-002
                SCCP MSG TYPE=04
                CDPA:  NI=1  RI=0    GTI=04 SSNI=1  PCI=1
                       TT=250   NP=04  NAI=010  ADDR=123456789012345678901
                       PC=   003-003-003  SSN=005
                CGPA:  NI=1  RI=0    GTI=04  SSNI=1  PCI=1
                       TT=100   NP=07  NAI=012  ADDR=01234567890123456789
                       PC=   001-001-001  SSN=004
              LSN=A1234567  GTTSET=3  203 46
```

Legend

ADDR	Address	CDPA	Called party address
CGPA	Calling party address	GTI	Global title indicator
GTTSET	GTT Set Index	LSN	Linkset name
NAI	Nature of address indicator	NI	Network indicator value
NP	Numbering plan	PC	Point code
PCI	Point code indicator	RI	Routing indicator
SSN	Subsystem number	SSNI	Subsystem number indicator
TT	Translation type		
TRANSLATED PC	Translated point code		
TRANSLATED SS	Translated subsystem		

NOTE: If Global Title Translation is found, the GTTSET in which the translation is found appears. If Global Title Translation is not found, the GTTSET does not display.

Alarm Level

No alarm condition. The message is informational only.

Procedure

1. Define the default CC using the *chg-stpopts:defndc* command. Refer to the *Commands Manual* for the proper usage.

1244 - Conv to intl num - Dflt MCC not found

Description

This message indicates that the default E212 mobile country code is not defined.

Example

```
station1234 99-08-30 16:28:08 EST EAGLE 35.0.0
    0018.1244 CARD 1103,A    INFO  Conv to intl num - Dflt MCC not found
                SIO=03   OPC=   001-001-001   DPC=   002-002-002
                SCCP MSG TYPE=04
                CDPA:  NI=1  RI=0    GTI=04  SSNI=1  PCI=1
                       TT=250   NP=04  NAI=010  ADDR=123456789012345678901
                       PC=   003-003-003  SSN=005
                CGPA:  NI=1  RI=0    GTI=04  SSNI=1  PCI=1
                       TT=100   NP=07  NAI=012  ADDR=01234567890123456789O
                       PC=   001-001-001  SSN=004
              LSN=A1234567  GTTSET=3  203 46
```

Legend

ADDR	Address	CDPA	Called party address
CGPA	Calling party address	GTI	Global title indicator
GTTSET	GTT Set Index	LSN	Linkset name
NAI	Nature of address indicator	NI	Network indicator value
NP	Numbering plan	PC	Point code
PCI	Point code indicator	RI	Routing indicator
SSN	Subsystem number	SSNI	Subsystem number indicator
TT	Translation type		
TRANSLATED PC	Translated point code		
TRANSLATED SS	Translated subsystem		

NOTE: If Global Title Translation is found, the GTTSET in which the translation is found appears. If Global Title Translation is not found, the GTTSET does not display.

Alarm Level

No alarm condition. The message is informational only.

Procedure

1. Define the default CC using the *chg-gsmopts:defmcc* command. Refer to the *Commands Manual* for the proper usage.

1245 - Conv to intl num - Dflt MNC not found

Description

This message indicates that the default E212 mobile network code is not defined.

Example

```
station1234 99-08-30 16:28:08 EST EAGLE 35.0.0
    0018.1245 CARD 1103,A    INFO  Conv to intl num - Dflt MNC not found
                SIO=03   OPC=   01-001-001   DPC=   002-002-002
                SCCP MSG TYPE=04
                CDPA:  NI=1  RI=0    GTI=04  SSNI=1  PCI=1
                       TT=250   NP=04  NAI=010  ADDR=123456789012345678901
                       PC=   003-003-003  SSN=005
                CGPA:  NI=1  RI=0    GTI=04  SSNI=1  PCI=1
                       TT=100   NP=07  NAI=012  ADDR=01234567890123456789
                       PC=   001-001-001  SSN=004
              LSN=A1234567  GTTSET=3  203 46
```

Legend

ADDR	Address	CDPA	Called party address
CGPA	Calling party address	GTI	Global title indicator
GTTSET	GTT Set Index	LSN	Linkset name
NAI	Nature of address indicator	NI	Network indicator value
NP	Numbering plan	PC	Point code
PCI	Point code indicator	RI	Routing indicator
SSN	Subsystem number	SSNI	Subsystem number indicator
TT	Translation type		
TRANSLATED PC	Translated point code		
TRANSLATED SS	Translated subsystem		

NOTE: If Global Title Translation is found, the GTTSET in which the translation is found appears. If Global Title Translation is not found, the GTTSET does not display.

Alarm Level

No alarm condition. The message is informational only.

Procedure

1. Define the default CC using the *chg-gsmopts:defmnc* command. Refer to the *Commands Manual* for the proper usage.

1246 - Invalid length of conditioned digits

Description

This message indicates that the the length of the conditioned international number is less than 5 or greater than 15 digits.

Example

```
station1234 99-08-30 16:28:08 EST EAGLE 35.0.0
    0018.1246 CARD 1103,A    INFO  Invalid length of conditioned digits
                SIO=03   OPC=   001-001-001   DPC=   002-002-002
                SCCP MSG TYPE=04
                CDPA:  NI=1  RI=0    GTI=04  SSNI=1  PCI=1
                       TT=250   NP=04  NAI=010  ADDR=123456789012345678901
                       PC=   003-003-003  SSN=005
                CGPA:  NI=1  RI=0    GTI=04  SSNI=1  PCI=1
                       TT=100   NP=07  NAI=012  ADDR=012345678901234567890
                       PC=   001-001-001  SSN=004
              LSN=A1234567  GTTSET=3  203 46
```

Legend

ADDR	Address	CDPA	Called party address
CGPA	Calling party address	GTI	Global title indicator
GTTSET	GTT Set Index	LSN	Linkset name
NAI	Nature of address indicator	NI	Network indicator value
NP	Numbering plan	PC	Point code
PCI	Point code indicator	RI	Routing indicator
SSN	Subsystem number	SSNI	Subsystem number indicator
TT	Translation type		
TRANSLATED PC	Translated point code		
TRANSLATED SS	Translated subsystem		

NOTE: If Global Title Translation is found, the GTTSET in which the translation is found appears. If Global Title Translation is not found, the GTTSET does not display.

Alarm Level

No alarm condition. The message is informational only.

Procedure

1. Use an international number that is within the proper range - 5 or greater and 15 or less.

1247 - Conversion of MGT to IMSI not possible

Description

This message indicates that the E212 mobile country code for the E214 mobile network code is not defined.

Example

```
station1234 99-08-30 16:28:08 EST EAGLE 35.0.0
    0018.1247 CARD 1103,A    INFO  Conversion of MGT to IMSI not possible
                SIO=03   OPC=   001-001-001   DPC=   002-002-002
                SCCP MSG TYPE=04
                CDPA:  NI=1  RI=0    GTI=04  SSNI=1  PCI=1
                       TT=250   NP=04  NAI=010  ADDR=123456789012345678901
                       PC=   003-003-003  SSN=005
                CGPA:  NI=1  RI=0    GTI=04  SSNI=1  PCI=1
                       TT=100   NP=07  NAI=012  ADDR=012345678901234567890
                       PC=   001-001-001  SSN=004
              LSN=A1234567  GTTSET=3  203 46
```

Legend

ADDR	Address	CDPA	Called party address
CGPA	Calling party address	GTI	Global title indicator
GTTSET	GTT Set Index	LSN	Linkset name
NAI	Nature of address indicator	NI	Network indicator value
NP	Numbering plan	PC	Point code
PCI	Point code indicator	RI	Routing indicator
SSN	Subsystem number	SSNI	Subsystem number indicator
TT	Translation type		
TRANSLATED PC	Translated point code		
TRANSLATED SS	Translated subsystem		

NOTE: If Global Title Translation is found, the GTTSET in which the translation is found appears. If Global Title Translation is not found, the GTTSET does not display.

Alarm Level

No alarm condition. The message is informational only.

Procedure

1. Enter the E214 part for the E214 code in the database using the *chg-gsmopts:ccnc=xxxxxxxx:mccmnc=xxxxxxx* command. Refer to the *Commands Manual* for the proper usage.

1248 - GSM MAP Screening rcvd unknown originator

Description

This message occurs when an MSU arrives with an SSN and MAP Op-Code that exist in the GSM SSN and MAP Op-Code tables, but the CGPA address does not exist in the GSM MAP Screening table or the CgPA address exists in the table but with an incorrect NPV/NAIV value. In this case, the default action for the Op-Code applies.

Example

```
RLGHNCXA21W 00-11-18 18:59:23 EST  EAGLE 35.0.0
0018.1248     CARD 1103    INFO GSM MAP Screening rcvd unknown originator
              OPC=   001-001-003        DPC=   2-012-1
              CDPA:  NI=1     RI=0   GTI=04 SSNI=0  PCI=1
                     TT=   250   NP=04  NAI=010  ADDR=123456789012345678901
                     PC=003-003-003  SSN=005
              CGPA:  NI=1     RI=0   GTI=04 SSNI=0  PCI=1
                     TT=100   NP=07  NAI=012  ADDR=01234567890123456789O
                     PC=   001-001-001  SSN=004
                     DATA=3a e2 38 c7 04 56 04 72 e0 e8 30 e9
                          2e cf 01 00 d0 02 83 01 f2 25 aa 0b
                          84 09 01 00 11 0a 19 49
              Op-Code=61  Forbidden Param=N/A  Action=Discard
```

Legend

ADDR	Address	CDPA	Called party address
CGPA	Calling party address	GTI	Global title indicator
NAI	Nature of address indicator	NI	Network indicator value
NP	Numbering plan	OPC	Origination point code
PC	Point code	PCI	Protocol control information
RI	Routing indicator	Op-Code	Operation Code
SSN	Subsystem number	SSNI	Subsystem number indicator
TT	Translation type	Param	Parameter
DATA	Hex dump of TCAP part of MSU		

Alarm Level

No alarm condition. The message is informational only.

Procedure

1. To prevent the GSM screening from disallowing this MSU, add the CgPA address to the GSM MAP or correct the CgPA address NPV or NAIV.

2. Alternatively, you may choose to disable MPS Screening on the specific linkset entirely. In an emergency situation for example, you can prevent MAP Screening from occurring on any suspected linkset with the *chg-ls:gsmscrn=off* command. Using this command means no MAP Screening will be performed on any MSU arriving through the linkset, which results in UIM #1248 no longer appearing.

---

3. Another choice is to change the default action shown in the example. It shows the `Action=Discard` for any MSU with `Op-Code=61`. This choice lets you set the default action to `Pass`; specify the command *chg-gsms-opcode:opname=* <insert the *opname* corresponding to the Op-Code> *:ndfltact=pass.* This action does not prevent UIMs from being reported, but it does prevent the specified Op-Code from being discarded.

---

4. If the frequency of UIM #1248 messages is distracting, you can limit the number of UIMs displayed per time interval for a specific UIM. Use the command *set-uim-acthresh:limit=1:intrvl=5:uimn=1248* to limit the output of UIM #1248 to one output every 5 minutes.

   NOTE: Use this suggestion sparingly, if at all. This action has value in temporarily suppressing a large volume of UIMs while diagnosing a MAP Screening situation.

1249 - SCCP rcvd GSM MAP Opcode w/forbidden param

Description

This message occurs when an MSU is screened in the GSM MAP Screening table and the MSU was found to contain a forbidden parameter as provisioned in the GSM MAP Screening table. The action that applies is taken from the matching entry in the GSM MAP Screening table.

Example

```
RLGHNCXA21W 00-11-18 18:59:23 EST  EAGLE 35.0.0
0018.1249     CARD 1103    INFO SCCP rcvd GSM MAP Op-Code w/forbidden param
              OPC=   001-001-003 DPC=   2-012-1
              CDPA:  NI=1     RI=0   GTI=04 SSNI=0  PCI=1
                     TT=250   NP=04  NAI=010  ADDR=123456789012345678901
                     PC=   003-003-003  SSN=005
              CGPA:  NI=1     RI=0   GTI=04 SSNI=0  PCI=1
                     TT=100   NP=07  NAI=012  ADDR=012345678901234567890
                     PC=   001-001-001  SSN=004
                     DATA=3a e2 38 c7 04 56 04 72 e0 e8 30 e9
                          2e cf 01 00 d0 02 83 01 f2 25 aa 0b
                          84 09 01 00 11 0a 19 49
              Op-Code=### Forbidden Param=N/A  Action=PASS
```

Legend

ADDR	Address	CDPA	Called party address
CGPA	Calling party address	GTI	Global title indicator
NAI	Nature of address indicator	NI	Network indicator value
NP	Numbering plan	OPC	Origination point code
PC	Point code	PCI	Protocol control information
RI	Routing indicator	Op-Code	Operation Code
SSN	Subsystem number	SSNI	Subsystem number indicator
TT	Translation type	Param	Parameter
DATA	Hex dump of TCAP part of MSU		

Alarm Level

No alarm condition. The message is informational only.

Procedure

1. The GSM MAP Screening table has successfully screened the forbidden parameter. The resulting action is performed from the matching entry.

2. To alter the screening being performed, redefine the GSM MAP Screening table using the *gsmmap* commands.

1250 - SCCP rcvd undefined MAP Op-Code

Description

This message occurs when an MSU passes the origination or destination SSN screening process and the MAP Op-Code table is searched, but the Op-Code of the MSU is not found in the MAP Op-Code table. In this case, the default action from the STPOPTS table applies.

Example

```
RLGHNCXA21W 00-11-18 18:59:23 EST  EAGLE 35.0.0
0018.1250     CARD 1103    INFO SCCP rcvd undefined MAP Op-Code
              OPC=001-001-003 DPC=   2-012-1
              CDPA:  NI=1     RI=0   GTI=04 SSNI=0  PCI=1
                     TT=250   NP=04  NAI=010  ADDR=123456789012345678901
                     PC=   003-003-003  SSN=005
              CGPA:  NI=1     RI=0   GTI=04 SSNI=0  PCI=1
                     TT=100   NP=07  NAI=012  ADDR=01234567890123456789O
                     PC=   001-001-001  SSN=004
                     DATA=3a e2 38 c7 04 56 04 72 e0 e8 30 e9
                          2e cf 01 00 d0 02 83 01 f2 25 aa 0b
                          84 09 01 00 11 0a 19 49
              Op-Code=### Forbidden Param=N/A  Action=ATIERR
```

Legend

ADDR	Address	CDPA	Called party address
CGPA	Calling party address	GTI	Global title indicator
NAI	Nature of address indicator	NI	Network indicator value
NP	Numbering plan	OPC	Origination point code
PC	Point code	PCI	Protocol control information
RI	Routing indicator	Op-Code	Operation Code
SSN	Subsystem number	SSNI	Subsystem number indicator
TT	Translation type	Param	Parameter
DATA	Hex dump of TCAP part of MSU		

Alarm Level

No alarm condition. The message is informational only.

Procedure

1. The GSM MAP Opcode table was searched, and the Op-Code of the MSU was not found.

2. The GSM MAP Op-Code table has successfully screened an Op-Code that was not included in the GSM MAP Opcode table.

---

3. However, if the Op-Code should not be screened, you can add it into the GSM MAP Op-Code table.

---

4. To alter the screening being performed, change the default action for GSM screening when the Op-Code is not defined with the STPOPTS commands.

1251 - Measurements data copy failure

Description

Measurements data is copied to all MCPM cards after collection. Measurements data copy to a Secondary MCPM failed.

Example

```
station5 00-04-18 19:12:00 EST  EAGLE 35.0.0
0002.1251    CARD 1201     INFO    Measurements data copy failure
```

Alarm Level

No alarm condition. The message is informational only.

Procedure

1. There is no immediate action needed, but the message indicates that the error was encountered.

1252 - Report generation failure

Description

This message is generated by the Primary MCPM. The measurement report identified in the output message did not generate.

Example

```
station5 00-04-18 19:12:00 EST  EAGLE 35.0.0
0002.1252    CARD 1201     INFO    Report generation failure
IP:111.111.111.111              FTP Error: XXXX
File Name: tues_serv.csv
```

Alarm Level

No alarm condition. The message is informational only.

Procedure

1. Enter the *rept-ftp-meas* command to manually initiate the generation and FTP transfer of the indicated measurement report. Refer to the *Commands Manual* for the correct usage of this command.

1253 - Report transfer failure FTP Server

Description

This message is generated by the Primary MCPM. The FTP transfer of the indicated report failed.

Example

```
station5 00-04-18 19:12:00 EST  EAGLE 35.0.0
0002.1253   CARD 1201,A    INFO   Report transfer failure FTP Server
IP:111.111.111.111              FTP Error: XXXX
File Name: tues_serv.csv
```

Alarm Level

No alarm condition. The message is informational only.

Procedure

1. Enter the *rept-ftp-meas* command to manually initiate the generation and FTP transfer of the indicated measurement report. Refer to the *Commands Manual* for the correct usage of this command.

1254 - Scheduled transfer failure

Description

This message is generated by the Primary MCPM. Some of the reports scheduled to be generated and transferred were not transferred.

Example

```
station5 00-04-18 19:12:00 EST  EAGLE 35.0.0
0002.1254    CARD 1201     INFO    Scheduled transfer failure
```

Alarm Level

No alarm condition. The message is informational only.

Procedure

1. Enter the *rept-ftp-meas* command to manually initiate the generation and FTP transfer of the affected measurement report. Refer to the *Commands Manual* for the correct usage of this command.

1255 - IS-41 LNP Qry rejected: WNP is OFF

Description

The EAGLE 5 ISS has rejected an LNPQS query that is decoded as an IS-41 Query because the appropriate WNP (Wireless Number Portability) feature is not on.

Example

```
RLGHNCXA21W 03-04-18 19:02:05 EST  EAGLE 35.0.0
0112.1255    CARD 1103,A1  INFO   IS-41 LNP Qry rejected: WNP is OFF
             SIO=83   OPC=   001-101-001    DPC=   001-001-001
             CDPA: AI=cb  SSN=016  TT=012
                  ADDR=919380
             CGPA: AI=c3  PC=   001-101-001     SSN=016
             DATA=3a e2 38 c7 04 56 04 72 e0 e8 30 e9
                  2e cf 01 00 d0 02 83 01 f2 25 aa 0b
                  84 09 01 00 11 0a 19 49
             LSN=e1m1s1
```

Legend

SIO	Service information octet	OPC	Origination point code
DPC	Destination point code	CDPA Length	Called party address length
AI	Address Indicator	SSN	Subsystem number
TT	Translation type	ADDR	Address
CGPA	Calling party address	PC	Point code
DATA	Hex dump of TCAP part of MSU	MSG TYPE	Message type
LSN	Linkset name		

Alarm Level

No alarm condition. The message is informational only.

Procedure

1. If you want to support the WNP feature, issue the `chg-feat:wnp=on` command to process IS-41 LNP queries.

2. If you do not want to support the WNP feature, ignore this informational message.

3. For additional information or assistance about the WNP or any feature to purchase, call Tekelec Technical Services.

1256 - MNP Circular Route Detected

Description

This message indicates the network has incorrect number portability data for a subscriber.

Example

```
station1234 99-08-30 16:28:08 EST EAGLE 35.0.0
    0018.1256 CARD 1103,A    INFO  MNP Circular Route Detected
                SIO=03   OPC=   001-001-001   DPC=   002-002-002
                SCCP MSG TYPE=04
                CDPA:  NI=1  RI=0    GTI=04  SSNI=1  PCI=1
                       TT=250   NP=04  NAI=010  ADDR=123456789012345678901
                       PC=   003-003-003  SSN=005
                CGPA:  NI=1  RI=0    GTI=04  SSNI=1  PCI=1
                       TT=100   NP=07  NAI=012  ADDR=01234567890123456789
                       PC=   001-001-001  SSN=004
              LSN=A1234567  GTTSET=3  203 46
```

Legend

ADDR	Address	CDPA	Called party address
CGPA	Calling party address	GTI	Global title indicator
GTTSET	GTT Set Index	LSN	Linkset name
NAI	Nature of address indicator	NI	Network indicator value
NP	Numbering plan	PC	Point code
PCI	Point code indicator	RI	Routing indicator
SSN	Subsystem number	SSNI	Subsystem number indicator
TT	Translation type		
TRANSLATED PC	Translated point code		
TRANSLATED SS	Translated subsystem		

NOTE: If Global Title Translation is found, the GTTSET in which the translation is found appears. If Global Title Translation is not found, the GTTSET does not display.

Alarm Level

No alarm condition. The message is informational only.

Procedure

1. Verify and update number portability data.

1257 - DB restore has cleared and Disabled PDS

Description

A DB restore has rendered the data on PDS table obsolete. The PDS table will be updated when the OAM is rebooted.

Example

```
RLGHNCXA21W 00-02-07 12:01:43 EST  EAGLE 35.0.0
0014.1257   SYSTEM  INFO  DB restore has cleared and Disabled PDS
```

Alarm Level

No alarm condition. The message is informational only.

Procedure

1. No action necessary.

1258 - Map Screening cannot Forward MSU

Description

This message occurs when an MSU selected by MAP Screening for the Forward screening action cannot be forwarded.

Example

```
RLGHNCXA21W 00-11-18 18:59:23 EST  EAGLE 35.0.0
0018.1258     CARD 1103    INFO Map Screening cannot Forward MSU
              OPC=   001-001-003        DPC=   2-012-1
              CDPA:  NI=1     RI=0   GTI=04 SSNI=0  PCI=1
                     TT=250   NP=04  NAI=010  ADDR=123456789012345678901
                     PC=   003-003-003  SSN=005
              CGPA:  NI=1     RI=0   GTI=04 SSNI=0  PCI=1
                     TT=100   NP=07  NAI=012  ADDR=01234567890123456789O
                     PC=   001-001-001  SSN=004
              Op-Code=61  Forbidden Param=N/A  Action=Discard
```

Legend

ADDR	Address	CDPA	Called party address
CGPA	Calling party address	GTI	Global title indicator
NAI	Nature of address indicator	NI	Network indicator value
NP	Numbering plan	OPC	Origination point code
PC	Point code	PCI	Protocol control information
RI	Routing indicator	Op-Code	Operation Code
SSN	Subsystem number	SSNI	Subsystem number indicator
TT	Translation type	Param	Parameter

Alarm Level

No alarm condition. The message is informational only.

Procedure

1. If the DPC indicated in the message should not be routed to, no further action is necessary.

2. If the DPC should be routed to from the EAGLE 5 ISS, use the *ent-map* command to enter the DPC into the mated application (MAP) table.

3. If the subsystem indicated in the message is not a mated application to the EAGLE 5 ISS, no further action is necessary.

---

4. If the SCCP message should have been routed, use the *ent-map* command to add the subsystem number to the mated application (MAP) table.

1259 - Map Screening cannot Duplicate MSU

Description

This message occurs when an MSU selected by MAP Screening for the Duplicate screening action cannot be duplicated or routed to the duplicate node.

Example

```
RLGHNCXA21W 00-11-18 18:59:23 EST  EAGLE 35.0.0
0018.1259     CARD 1103    INFO Map Screening cannot Duplicate MSU
              OPC=   001-001-003        DPC=   2-012-1
              CDPA:  NI=1     RI=0   GTI=04 SSNI=0  PCI=1
                     TT=250   NP=04  NAI=010  ADDR=123456789012345678901
                     PC=   003-003-003  SSN=005
              CGPA:  NI=1     RI=0   GTI=04 SSNI=0  PCI=1
                     TT=100   NP=07  NAI=012  ADDR=01234567890123456789O
                     PC=   001-001-001  SSN=004
              Op-Code=61  Forbidden Param=N/A  Action=Discard
```

Legend

ADDR	Address	CDPA	Called party address
CGPA	Calling party address	GTI	Global title indicator
NAI	Nature of address indicator	NI	Network indicator value
NP	Numbering plan	OPC	Origination point code
PC	Point code	PCI	Protocol control information
RI	Routing indicator	Op-Code	Operation Code
SSN	Subsystem number	SSNI	Subsystem number indicator
TT	Translation type	Param	Parameter

Alarm Level

No alarm condition. The message is informational only.

Procedure

1. If the DPC indicated in the message should not be routed to, no further action is necessary.

2. If the DPC should be routed to from the EAGLE 5 ISS, use the *ent-map* command to enter the DPC into the mated application (MAP) table.

3. If the subsystem indicated in the message is not a mated application to the EAGLE 5 ISS, no further action is necessary.

---

4. If the SCCP message should have been routed, use the *ent-map* command to add the subsystem number to the mated application (MAP) table.

1260 - LSS: Unsupported TCAP msg type

Description

This message indicates that the LSS (local subsystem) received an SCCP message containing an unsupported TCAP (transaction capabilities application portion) message type.

Example

```
RLGHNCXA21W 99-12-18 18:59:23 EST  EAGLE 35.0.0
0101.1260    CARD 1103,A1   INFO   LSS: Unsupported TCAP msg type
             SIO=03   OPC=   001-001-001  DPC=   002-002-002
             CDPA:  AI=52  SSN=005  TT=250
                    ADDR=ABCDEF1234567890ABCDE
             CGPA:  AI=43  PC=   001-001-001  SSN=002
             LSN=A1234567
```

Legend

SIO	Service information octet	OPC	Origination point code
DPC	Destination point code	CDPA	Called party address
AI	Address Indicator	SSN	Subsystem number
TT	Translation type	ADDR	Address
CGPA	Calling party address	PC	Point code
LSN	Linkset name		

Alarm Level

No alarm condition. The message is informational only.

Procedure

1. No action at the EAGLE 5 ISS is necessary.

1261 - LSS: Invalid len in transaction portion

Description

This message indicates that the LSS (local subsystem) received a TCAP message containing an invalid length in the transaction portion of the message.

Example

```
RLGHNCXA21W 99-12-18 18:59:23 EST  EAGLE 35.0.0
0101.1261    CARD 1103,A1   INFO  LSS: Invalid len in transaction portion
             SIO=03   OPC=   001-001-001  DPC=   002-002-002
             CDPA:  AI=52  SSN=005  TT=250
                    ADDR=ABCDEF1234567890ABCDE
             CGPA:  AI=43  PC=   001-001-001  SSN=002
             LSN=A1234567
```

Legend

SIO	Service information octet	OPC	Origination point code
DPC	Destination point code	CDPA	Called party address
AI	Address Indicator	SSN	Subsystem number
TT	Translation type	ADDR	Address
CGPA	Calling party address	PC	Point code
LSN	Linkset name		

Alarm Level

No alarm condition. The message is informational only.

Procedure

1. No action at the EAGLE 5 ISS is necessary.

1262 - LSS: Invalid len in dialogue portion

Description

This message indicates that the LSS (local subsystem) received a TCAP message with an invalid length in the dialogue portion of the message.

Example

```
RLGHNCXA21W 99-12-18 18:59:23 EST  EAGLE 35.0.0
0101.1262    CARD 1103,A1   INFO   LSS: Invalid len in dialogue portion
             SIO=03   OPC=   001-001-001  DPC=   002-002-002
             CDPA:  AI=52  SSN=005  TT=250
                    ADDR=ABCDEF1234567890ABCDE
             CGPA:  AI=43  PC=   001-001-001  SSN=002
             LSN=A1234567
```

Legend

SIO	Service information octet	OPC	Origination point code
DPC	Destination point code	CDPA	Called party address
AI	Address Indicator	SSN	Subsystem number
TT	Translation type	ADDR	Address
CGPA	Calling party address	PC	Point code
LSN	Linkset name		

Alarm Level

Procedure

1. No action at the EAGLE 5 ISS is necessary.

1263 - LSS: Invalid len in component portion

Description

This message indicates that the LSS (local subsystem) received a TCAP message with an invalid length in the component portion of the message.

Example

```
RLGHNCXA21W 99-12-18 18:59:23 EST  EAGLE 35.0.0
0101.1263    CARD 1103,A    INFO   LSS: Invalid len in component portion
             SIO=03   OPC=   001-001-001  DPC=   002-002-002
             CDPA:  AI=52  SSN=005  TT=250
                    ADDR=ABCDEF1234567890ABCDE
             CGPA:  AI=43  PC=   001-001-001  SSN=002
             LSN=A1234567
```

Legend

SIO	Service information octet	OPC	Origination point code
DPC	Destination point code	CDPA	Called party address
AI	Address Indicator	SSN	Subsystem number
TT	Translation type	ADDR	Address
CGPA	Calling party address	PC	Point code
LSN	Linkset name		

Alarm Level

No alarm condition. The message is informational only.

Procedure

1. No action at the EAGLE 5 ISS is necessary.

1264 - LSS: No originating transaction ID

Description

This message indicates that the LSS (local subsystem) received a TCAP message that does not have an originating transaction ID.

Example

```
RLGHNCXA21W 99-12-18 18:59:23 EST  EAGLE 35.0.0
0101.1264    CARD 1103,A1   INFO   LSS: No originating transaction ID
             SIO=03   OPC=   001-001-001  DPC=   002-002-002
             CDPA:  AI=52  SSN=005  TT=250
                    ADDR=ABCDEF1234567890ABCDE
             CGPA:  AI=43  PC=   001-001-001  SSN=002
             LSN=A1234567
```

Legend

SIO	Service information octet	OPC	Origination point code
DPC	Destination point code	CDPA	Called party address
AI	Address Indicator	SSN	Subsystem number
TT	Translation type	ADDR	Address
CGPA	Calling party address	PC	Point code
LSN	Linkset name		

Alarm Level

No alarm condition. The message is informational only.

Procedure

1. No action at the EAGLE 5 ISS is necessary.

1265 - LSS: Invalid transaction ID len

Description

This message indicates that the LSS (local subsystem) received a TCAP message containing an invalid transaction ID length.

Example

```
RLGHNCXA21W 99-12-18 18:59:23 EST  EAGLE 35.0.0
0101.1265    CARD 1103,A1   INFO   LSS: Invalid transaction ID len
             SIO=03   OPC=   001-001-001  DPC=   002-002-002
             CDPA:  AI=52  SSN=005  TT=250
                    ADDR=ABCDEF1234567890ABCDE
             CGPA:  AI=43  PC=   001-001-001  SSN=002
             LSN=A1234567
```

Legend

SIO	Service information octet	OPC	Origination point code
DPC	Destination point code	CDPA	Called party address
AI	Address Indicator	SSN	Subsystem number
TT	Translation type	ADDR	Address
CGPA	Calling party address	PC	Point code
LSN	Linkset name		

Alarm Level

No alarm condition. The message is informational only.

Procedure

1. No action at the EAGLE 5 ISS is necessary.

1266 - LSS: Destination transaction ID in Begin

Description

This message indicates that the LSS (local subsystem) received a Begin TCAP message containing a destination transaction ID. (The Begin message should have an originating transaction ID only. A destination transaction ID is valid only in Abort, Continue, and End TCAP messages.)

Example

```
RLGHNCXA21W 99-12-18 18:59:23 EST  EAGLE 35.0.0
0101.1266  CARD 1103,A1   INFO   LSS: Destination transaction ID in Begin
             SIO=03   OPC=   001-001-001  DPC=   002-002-002
             CDPA:  AI=52  SSN=005  TT=250
                    ADDR=ABCDEF1234567890ABCDE
             CGPA:  AI=43  PC=   001-001-001  SSN=002
             LSN=A1234567
```

Legend

SIO	Service information octet	OPC	Origination point code
DPC	Destination point code	CDPA	Called party address
AI	Address Indicator	SSN	Subsystem number
TT	Translation type	ADDR	Address
CGPA	Calling party address	PC	Point code
LSN	Linkset name		

Alarm Level

No alarm condition. The message is informational only.

Procedure

1. No action at the EAGLE 5 ISS is necessary.

1267 - LSS: No External element

Description

This message indicates that the LSS (local subsystem) received a TCAP message that does not contain an External element in the dialogue portion of the message.

Example

```
RLGHNCXA21W 99-12-18 18:59:23 EST  EAGLE 35.0.0
0101.1267    CARD 1103,A1   INFO   LSS: No External element
             SIO=03   OPC=   001-001-001  DPC=   002-002-002
             CDPA:  AI=52  SSN=005  TT=250
                    ADDR=ABCDEF1234567890ABCDE
             CGPA:  AI=43  PC=   001-001-001  SSN=002
             LSN=A1234567
```

Legend

SIO	Service information octet	OPC	Origination point code
DPC	Destination point code	CDPA	Called party address
AI	Address Indicator	SSN	Subsystem number
TT	Translation type	ADDR	Address
CGPA	Calling party address	PC	Point code
LSN	Linkset name		

Alarm Level

No alarm condition. The message is informational only.

Procedure

1. No action at the EAGLE 5 ISS is necessary.

1268 - LSS: No External Object Identifier

Description

This message indicates that the LSS (local subsystem) received a TCAP message that does not contain an Object Identifier element in the External element in the dialogue portion of the message.

Example

```
RLGHNCXA21W 99-12-18 18:59:23 EST  EAGLE 35.0.0
0101.1268    CARD 1103,A1   INFO   LSS: No External Object Identifier
             SIO=03   OPC=   001-001-001  DPC=   002-002-002
             CDPA:  AI=52  SSN=005  TT=250
                    ADDR=ABCDEF1234567890ABCDE
             CGPA:  AI=43  PC=   001-001-001  SSN=002
             LSN=A1234567
```

Legend

SIO	Service information octet	OPC	Origination point code
DPC	Destination point code	CDPA	Called party address
AI	Address Indicator	SSN	Subsystem number
TT	Translation type	ADDR	Address
CGPA	Calling party address	PC	Point code
LSN	Linkset name		

Alarm Level

No alarm condition. The message is informational only.

Procedure

1. No action at the EAGLE 5 ISS is necessary.

1269 - LSS: Not Structured Dialogue

Description

This message indicates that the LSS (local subsystem) received a TCAP message with an Object Identifier value in the External element in the dialogue portion that does not indicate a structured dialogue as specified in ITU Q.773.

Example

```
RLGHNCXA21W 99-12-18 18:59:23 EST  EAGLE 35.0.0
0101.1269    CARD 1103,A1   INFO   LSS: Not Structured Dialogue
             SIO=03   OPC=   001-001-001  DPC=   002-002-002
             CDPA:  AI=52  SSN=005  TT=250
                    ADDR=ABCDEF1234567890ABCDE
             CGPA:  AI=43  PC=   001-001-001  SSN=002
             LSN=A1234567
```

Legend

SIO	Service information octet	OPC	Origination point code
DPC	Destination point code	CDPA	Called party address
AI	Address Indicator	SSN	Subsystem number
TT	Translation type	ADDR	Address
CGPA	Calling party address	PC	Point code
LSN	Linkset name		

Alarm Level

No alarm condition. The message is informational only.

Procedure

1. No action at the EAGLE 5 ISS is necessary.

1270 - LSS: No External ASN1-Type

Description

This message indicates that the LSS (local subsystem) received a TCAP message that does not have an ASN1-Type element in the External element in the dialogue portion of the message.

Example

```
RLGHNCXA21W 99-12-18 18:59:23 EST  EAGLE 35.0.0
0101.1270    CARD 1103,A1   INFO   LSS: No External ANS1-Type
             SIO=03   OPC=   001-001-001  DPC=   002-002-002
             CDPA:  AI=52  SSN=005  TT=250
                    ADDR=ABCDEF1234567890ABCDE
             CGPA:  AI=43  PC=   001-001-001  SSN=002
             LSN=A1234567
```

Legend

SIO	Service information octet	OPC	Origination point code
DPC	Destination point code	CDPA	Called party address
AI	Address Indicator	SSN	Subsystem number
TT	Translation type	ADDR	Address
CGPA	Calling party address	PC	Point code
LSN	Linkset name		

Alarm Level

No alarm condition. The message is informational only.

Procedure

1. No action at the EAGLE 5 ISS is necessary.

1271 - LSS: No Dialogue Request

Description

This message indicates that the LSS (local subsystem) received a TCAP message that odes not have a Dialogue Request element in the ASN1-Type element in the dialogue portion of the message.

Example

```
RLGHNCXA21W 99-12-18 18:59:23 EST  EAGLE 35.0.0
0101.1271    CARD 1103,A1   INFO   LSS: No Dialogue Request
             SIO=03   OPC=   001-001-001  DPC=   002-002-002
             CDPA:  AI=52  SSN=005  TT=250
                    ADDR=ABCDEF1234567890ABCDE
             CGPA:  AI=43  PC=   001-001-001  SSN=002
             LSN=A1234567
```

Legend

SIO	Service information octet	OPC	Origination point code
DPC	Destination point code	CDPA	Called party address
AI	Address Indicator	SSN	Subsystem number
TT	Translation type	ADDR	Address
CGPA	Calling party address	PC	Point code
LSN	Linkset name		

Alarm Level

No alarm condition. The message is informational only.

Procedure

1. No action at the EAGLE 5 ISS is necessary.

1272 - LSS: No Application Context Name

Description

This message indicates that the LSS (local subsystem) received a TCAP message that does not have an Application Context Name element in the Dialogue Request element in the dialogue portion of the message.

Example

```
RLGHNCXA21W 99-12-18 18:59:23 EST  EAGLE 35.0.0
0101.1272    CARD 1103,A1   INFO   LSS: No Application Context Name
             SIO=03   OPC=   001-001-001  DPC=   002-002-002
             CDPA:  AI=52  SSN=005  TT=250
                    ADDR=ABCDEF1234567890ABCDE
             CGPA:  AI=43  PC=   001-001-001  SSN=002
             LSN=A1234567
```

Legend

SIO	Service information octet	OPC	Origination point code
DPC	Destination point code	CDPA	Called party address
AI	Address Indicator	SSN	Subsystem number
TT	Translation type	ADDR	Address
CGPA	Calling party address	PC	Point code
LSN	Linkset name		

Alarm Level

No alarm condition. The message is informational only.

Procedure

1. No action at the EAGLE 5 ISS is necessary.

1273 - LSS: No ACN Object Identifier

Description

This message indicates that the LSS (local subsystem) received a TCAP message that does not have an Object Identifier element in the Application Context Name element in the dialogue portion of the message.

Example

```
RLGHNCXA21W 99-12-18 18:59:23 EST  EAGLE 35.0.0
0101.1273    CARD 1103,A1   INFO   LSS: No ACN Object Identifier
             SIO=03   OPC=   001-001-001  DPC=   002-002-002
             CDPA:  AI=52  SSN=005  TT=250
                    ADDR=ABCDEF1234567890ABCDE
             CGPA:  AI=43  PC=   001-001-001  SSN=002
             LSN=A1234567
```

Legend

SIO	Service information octet	OPC	Origination point code
DPC	Destination point code	CDPA	Called party address
AI	Address Indicator	SSN	Subsystem number
TT	Translation type	ADDR	Address
CGPA	Calling party address	PC	Point code
LSN	Linkset name		

Alarm Level

No alarm condition. The message is informational only.

Procedure

1. No action at the EAGLE 5 ISS is necessary.

1274 - LSS: No component portion

Description

This message indicates that the LSS (local subsystem) received a TCAP message that does not contain a component portion tag.

Example

```
RLGHNCXA21W 99-12-18 18:59:23 EST  EAGLE 35.0.0
0101.1274    CARD 1103,A1   INFO   LSS: No component portion
             SIO=03   OPC=   001-001-001  DPC=   002-002-002
             CDPA:  AI=52  SSN=005  TT=250
                    ADDR=ABCDEF1234567890ABCDE
             CGPA:  AI=43  PC=   001-001-001  SSN=002
             LSN=A1234567
```

Legend

SIO	Service information octet	OPC	Origination point code
DPC	Destination point code	CDPA	Called party address
AI	Address Indicator	SSN	Subsystem number
TT	Translation type	ADDR	Address
CGPA	Calling party address	PC	Point code
LSN	Linkset name		

Alarm Level

No alarm condition. The message is informational only.

Procedure

1. No action at the EAGLE 5 ISS is necessary.

1275 - LSS: No Invoke component

Description

This message indicates that the LSS (local subsystem) received a TCAP message that does not contain an Invoke component.

Example

```
RLGHNCXA21W 99-12-18 18:59:23 EST  EAGLE 35.0.0
0101.1275    CARD 1103,A1   INFO   LSS: No Invoke component
             SIO=03   OPC=   001-001-001  DPC=   002-002-002
             CDPA:  AI=52  SSN=005  TT=250
                    ADDR=ABCDEF1234567890ABCDE
             CGPA:  AI=43  PC=   001-001-001  SSN=002
             LSN=A1234567
```

Legend

SIO	Service information octet	OPC	Origination point code
DPC	Destination point code	CDPA	Called party address
AI	Address Indicator	SSN	Subsystem number
TT	Translation type	ADDR	Address
CGPA	Calling party address	PC	Point code
LSN	Linkset name		

Alarm Level

No alarm condition. The message is informational only.

Procedure

1. No action at the EAGLE 5 ISS is necessary.

1276 - LSS: No Invoke ID

Description

This message indicates that the LSS (local subsystem) received a TCAP message that does not contain an Invoke ID within the component.

Example

```
RLGHNCXA21W 99-12-18 18:59:23 EST  EAGLE 35.0.0
0101.1276    CARD 1103,A1   INFO   LSS: No Invoke ID
             SIO=03   OPC=   001-001-001  DPC=   002-002-002
             CDPA:  AI=52  SSN=005  TT=250
                    ADDR=ABCDEF1234567890ABCDE
             CGPA:  AI=43  PC=   001-001-001  SSN=002
             LSN=A1234567
```

Legend

SIO	Service information octet	OPC	Origination point code
DPC	Destination point code	CDPA	Called party address
AI	Address Indicator	SSN	Subsystem number
TT	Translation type	ADDR	Address
CGPA	Calling party address	PC	Point code
LSN	Linkset name		

Alarm Level

No alarm condition. The message is informational only.

Procedure

1. No action at the EAGLE 5 ISS is necessary.

1277 - LSS: No operation code

Description

This message indicates that the LSS (local subsystem) received a TCAP message that does not contain an operation code tag within the component.

Example

```
RLGHNCXA21W 99-12-18 18:59:23 EST  EAGLE 35.0.0
0101.1277    CARD 1103,A2    INFO   LSS: No operation code
             SIO=03   OPC=   001-001-001  DPC=   002-002-002
             CDPA:  AI=52  SSN=005  TT=250
                    ADDR=ABCDEF1234567890ABCDE
             CGPA:  AI=43  PC=   001-001-001  SSN=002
             LSN=A1234567
```

Legend

SIO	Service information octet	OPC	Origination point code
DPC	Destination point code	CDPA	Called party address
AI	Address Indicator	SSN	Subsystem number
TT	Translation type	ADDR	Address
CGPA	Calling party address	PC	Point code
LSN	Linkset name		

Alarm Level

No alarm condition. The message is informational only.

Procedure

1. No action at the EAGLE 5 ISS is necessary.

1278 - LSS: No parameter (set/sequence)

Description

This message indicates that the LSS (local subsystem) received a TCAP message that does not contain a parameter, parameter set, or a parameter sequence within the component.

Example

```
RLGHNCXA21W 99-12-18 18:59:23 EST  EAGLE 35.0.0
0101.1278    CARD 1103,A1   INFO   LSS: No parameter (set/sequence)
             SIO=03   OPC=   001-001-001  DPC=   002-002-002
             CDPA:  AI=52  SSN=005  TT=250
                    ADDR=ABCDEF1234567890ABCDE
             CGPA:  AI=43  PC=   001-001-001  SSN=002
             LSN=A1234567
```

Legend

SIO	Service information octet	OPC	Origination point code
DPC	Destination point code	CDPA	Called party address
AI	Address Indicator	SSN	Subsystem number
TT	Translation type	ADDR	Address
CGPA	Calling party address	PC	Point code
LSN	Linkset name		

Alarm Level

No alarm condition. The message is informational only.

Procedure

1. No action at the EAGLE 5 ISS is necessary.

1279 - LSS: Unsupported network type

Description

This message indicates that the LSS (local subsystem) received an SCCP message of an unsupported network type.

Example

```
RLGHNCXA21W 99-12-18 18:59:23 EST  EAGLE 35.0.0
0101.1279    CARD 1103,A   INFO   LSS: Unsupported network type
             SIO=03   OPC=   001-001-001  DPC=   002-002-002
             CDPA:  AI=52  SSN=005  TT=250
                    ADDR=ABCDEF1234567890ABCDE
             CGPA:  AI=43  PC=   001-001-001  SSN=002
             LSN=A1234567
```

Legend

SIO	Service information octet	OPC	Origination point code
DPC	Destination point code	CDPA	Called party address
AI	Address Indicator	SSN	Subsystem number
TT	Translation type	ADDR	Address
CGPA	Calling party address	PC	Point code
LSN	Linkset name		

Alarm Level

No alarm condition. The message is informational only.

Procedure

1. No action at the EAGLE 5 ISS is necessary.

1280 - LSS: Unsupported SCCP msg type

Description

This message indicates that the LSS (local subsystem) received an SCCP message of an unsupported SCCP message type.

Example

```
RLGHNCXA21W 99-12-18 18:59:23 EST  EAGLE 35.0.0
0101.1280    CARD 1103,A1   INFO   LSS: Unsupported SCCP msg type
             SIO=03   OPC=   001-001-001  DPC=   002-002-002
             CDPA:  AI=52  SSN=005  TT=250
                    ADDR=ABCDEF1234567890ABCDE
             CGPA:  AI=43  PC=   001-001-001  SSN=002
             LSN=A1234567
```

Legend

SIO	Service information octet	OPC	Origination point code
DPC	Destination point code	CDPA	Called party address
AI	Address Indicator	SSN	Subsystem number
TT	Translation type	ADDR	Address
CGPA	Calling party address	PC	Point code
LSN	Linkset name		

Alarm Level

No alarm condition. The message is informational only.

Procedure

1. No action at the EAGLE 5 ISS is necessary.

1281 - LSS: No SCCP CDPA SSN

Description

This message indicates that the LSS (local subsystem) received an SCCP message for which the subsystem number (SSN) for the called party (CDPA) is missing.

Example

```
RLGHNCXA21W 99-12-18 18:59:23 EST  EAGLE 35.0.0
0101.1281    CARD 1103,A1   INFO   LSS: No SCCP CDPA SSN
             SIO=03   OPC=   001-001-001  DPC=   002-002-002
             CDPA:  AI=50  SSN=000  TT=250
                    ADDR=ABCDEF1234567890ABCDE
             CGPA:  AI=43  PC=   001-001-001  SSN=002
             LSN=A1234567
```

Legend

SIO	Service information octet	OPC	Origination point code
DPC	Destination point code	CDPA	Called party address
AI	Address Indicator	SSN	Subsystem number
TT	Translation type	ADDR	Address
CGPA	Calling party address	PC	Point code
LSN	Linkset name		

Alarm Level

No alarm condition. The message is informational only.

Procedure

1. No action at the EAGLE 5 ISS is necessary.

1282 - LSS: Unsupported SCCP CDPA GTI

Description

This message indicates that the LSS (local subsystem) received an SCCP message for which the GTI (Global Title Indicator) value for the called party (CDPA) is unsupported.

Example

```
RLGHNCXA21W 99-12-18 18:59:23 EST  EAGLE 35.0.0
0101.1282    CARD 1103,A1   INFO   LSS: Unsupported SCCP CDPA GTI
             SIO=03   OPC=   001-001-001  DPC=   002-002-002
             CDPA:  AI=4E  SSN=005  TT=250
                    ADDR=ABCDEF1234567890ABCDE
             CGPA:  AI=43  PC=   001-001-001  SSN=002
             LSN=A1234567
```

Legend

SIO	Service information octet	OPC	Origination point code
DPC	Destination point code	CDPA	Called party address
AI	Address Indicator	SSN	Subsystem number
TT	Translation type	ADDR	Address
CGPA	Calling party address	PC	Point code
LSN	Linkset name		

Alarm Level

No alarm condition. The message is informational only.

Procedure

1. No action at the EAGLE 5 ISS is necessary.

1283 - LSS: Unsupported SCCP CGPA RI

Description

This message indicates that the LSS (local subsystem) received an SCCP message for which the RI (Routing Indicator) value for the calling party (CGPA) is unsupported.

Example

```
RLGHNCXA21W 99-12-18 18:59:23 EST  EAGLE 35.0.0
0101.1283    CARD 1103,A1   INFO   LSS: Unsupported SCCP CGPA RI
             SIO=03   OPC=   001-001-001  DPC=   002-002-002
             CDPA:  AI=52  SSN=005  TT=250
                    ADDR=ABCDEF1234567890ABCDE
             CGPA:  AI=12  PC=    001-001-001  SSN=002
             LSN=A1234567
```

Legend

SIO	Service information octet	OPC	Origination point code
DPC	Destination point code	CDPA	Called party address
AI	Address Indicator	SSN	Subsystem number
TT	Translation type	ADDR	Address
CGPA	Calling party address	PC	Point code
LSN	Linkset name		

Alarm Level

No alarm condition. The message is informational only.

Procedure

1. No action at the EAGLE 5 ISS is necessary.

1284 - LSS: Unknown SSP PC

Description

This message indicates that the LSS (local subsystem) received an SCCP message that contained an SSP (Service Switching Point) point code (PC) that is not in the EAGLE 5 ISS routing table. The SSP PC is the CGPA PC (if it exists) or the OPC, otherwise. In the example below, the SSP PC is 001-001-002.

Example

```
RLGHNCXA21W 99-12-18 18:59:23 EST  EAGLE 35.0.0
0101.1284    CARD 1103,A2   INFO   LSS: Unknown SSP PC
             SIO=03   OPC=   001-001-001  DPC=   002-002-002
             CDPA:  AI=52  SSN=005  TT=250
                    ADDR=ABCDEF1234567890ABCDE
             CGPA:  AI=43  PC=   001-001-002  SSN=002
             LSN=A1234567
```

Legend

SIO	Service information octet	OPC	Origination point code
DPC	Destination point code	CDPA	Called party address
AI	Address Indicator	SSN	Subsystem number
TT	Translation type	ADDR	Address
CGPA	Calling party address	PC	Point code
LSN	Linkset name		

Alarm Level

No alarm condition. The message is informational only.

Procedure

1. The LSS received a message that does not have a corresponding SSP point code entry in the EAGLE 5 ISS routing table.

2. You must decide whether you want to accept queries from that SSP.

a. If you choose to not respond to queries from that SSP, use the gateway screening feature to stop this information message from re-appearing by having the EAGLE 5 ISS reject queries from that specific SSP. No further action is necessary.

b. If you want to respond to queries from that SSP, continue with the next step.

---

3. List the routing table entry for the SSP in question with the *rtrv-rte* command.

a. If the retrieve route command shows the SSP point code has an EAGLE 5 ISS routing table entry, which is not expected since this message says no entry exists, contact Tekelec Technical Services at the appropriate number about this situation. Do not continue to other steps of this procedure.

Reference: “Customer Care Center” on page 1-13.

b. If the retrieve route command shows no entry in the routing table, which is expected here, continue with the next step.

---

4. List the destination table entry for the SSP in question with the *rtrv-dstn* command.

a. If the SSP point code is not in the EAGLE 5 ISS destination table, add that entry with the *ent-dstn* command. (For detailed information about using the *ent-dstn* command, refer to “Adding a Destination Point Code” in Chapter 2, “Configuring Destination Tables” in the *EAGLE Database Administration -- SS7* manual.) Proceed to Step 5.

b. If the SSP point code is in the EAGLE 5 ISS destination table, continue with the next step.

---

5. Enter the route set for the SSP point code by issuing one of more *ent-rte* commands. (For detailed information about using the *ent-rte* command, refer to “Adding a Route” in the chapter “SS7 Configuration” in the *EAGLE Database Administration - SS7* manual.)

1285 - LSS: No SCCP CGPA SSN

Description

This message indicates that the LSS (local subsystem) received an SCCP message in which the subsystem number (SSN) for the calling party (CGPA) is missing.

Example

```
RLGHNCXA21W 99-12-18 18:59:23 EST  EAGLE 35.0.0
0101.1285    CARD 1103,A1   INFO   LSS: No SCCP CGPA SSN
             SIO=03   OPC=   001-001-001  DPC=   002-002-002
             CDPA:  AI=52  SSN=005  TT=250
                    ADDR=ABCDEF1234567890ABCDE
             CGPA:  AI=41  PC=   001-001-001  SSN=000
             LSN=A1234567
```

Legend

SIO	Service information octet	OPC	Origination point code
DPC	Destination point code	CDPA	Called party address
AI	Address Indicator	SSN	Subsystem number
TT	Translation type	ADDR	Address
CGPA	Calling party address	PC	Point code
LSN	Linkset name		

Alarm Level

No alarm condition. The message is informational only.

Procedure

1. No action at the EAGLE 5 ISS is necessary.

1286 - LSS: Invalid INAP CalledPartyNumber len

Description

This message indicates that the LSS (local subsystem) received an INAP message in which the Called Party Number parameter length is invalid.

Example

```
RLGHNCXA21W 99-12-18 18:59:23 EST  EAGLE 35.0.0
0101.1286   CARD 1103,A1   INFO   LSS: Invalid INAP CalledPartyNumber len
             SIO=03   OPC=   001-001-001  DPC=   002-002-002
             CDPA:  AI=52  SSN=005  TT=250
                    ADDR=ABCDEF1234567890ABCDE
             CGPA:  AI=43  PC=   001-001-001  SSN=002
             LSN=A1234567
```

Legend

SIO	Service information octet	OPC	Origination point code
DPC	Destination point code	CDPA	Called party address
AI	Address Indicator	SSN	Subsystem number
TT	Translation type	ADDR	Address
CGPA	Calling party address	PC	Point code
LSN	Linkset name		

Alarm Level

No alarm condition. The message is informational only.

Procedure

1. No action at the EAGLE 5 ISS is necessary.

1287 - LSS: Unsupported ACN Object ID len

Description

This message indicates that the LSS (local subsystem) received a TCAP message in which the length of the Application Context Name's Object Identifier is unsupported.

Example

```
RLGHNCXA21W 99-12-18 18:59:23 EST  EAGLE 35.0.0
0101.1287    CARD 1103,A1   INFO   LSS: Unsupported ACN Object ID len
             SIO=03   OPC=   001-001-001  DPC=   002-002-002
             CDPA:  AI=52  SSN=005  TT=250
                    ADDR=ABCDEF1234567890ABCDE
             CGPA:  AI=43  PC=   001-001-001  SSN=002
             LSN=A1234567
```

Legend

SIO	Service information octet	OPC	Origination point code
DPC	Destination point code	CDPA	Called party address
AI	Address Indicator	SSN	Subsystem number
TT	Translation type	ADDR	Address
CGPA	Calling party address	PC	Point code
LSN	Linkset name		

Alarm Level

No alarm condition. The message is informational only.

Procedure

1. No action at the EAGLE 5 ISS is necessary.

1288 - LSS: Unsupported operation code

Description

This message indicates that the LSS (local subsystem) received a TCAP message in which the operation code is unsupported.

Example

```
RLGHNCXA21W 99-12-18 18:59:23 EST  EAGLE 35.0.0
0101.1288    CARD 1103,A1   INFO   LSS: Unsupported operation code
             SIO=03   OPC=   001-001-001  DPC=   002-002-002
             CDPA:  AI=52  SSN=005  TT=250
                    ADDR=ABCDEF1234567890ABCDE
             CGPA:  AI=43  PC=   001-001-001  SSN=002
             LSN=A1234567
```

Legend

SIO	Service information octet	OPC	Origination point code
DPC	Destination point code	CDPA	Called party address
AI	Address Indicator	SSN	Subsystem number
TT	Translation type	ADDR	Address
CGPA	Calling party address	PC	Point code
LSN	Linkset name		

Alarm Level

No alarm condition. The message is informational only.

Procedure

1. No action at the EAGLE 5 ISS is necessary.

1289 - LSS: No parameter sequence

Description

This message indicates that the LSS (local subsystem) received a TCAP message that has a single parameter or a parameter set instead of the expected parameter sequence.

Example

```
RLGHNCXA21W 99-12-18 18:59:23 EST  EAGLE 35.0.0
0101.1289    CARD 1103,A1   INFO   LSS: No parameter sequence
             SIO=03   OPC=   001-001-001  DPC=   002-002-002
             CDPA:  AI=52  SSN=005  TT=250
                    ADDR=ABCDEF1234567890ABCDE
             CGPA:  AI=43  PC=   001-001-001  SSN=002
             LSN=A1234567
```

Legend

SIO	Service information octet	OPC	Origination point code
DPC	Destination point code	CDPA	Called party address
AI	Address Indicator	SSN	Subsystem number
TT	Translation type	ADDR	Address
CGPA	Calling party address	PC	Point code
LSN	Linkset name		

Alarm Level

No alarm condition. The message is informational only.

Procedure

1. No action at the EAGLE 5 ISS is necessary.

1290 - LSS: No INAP ServiceKey parameter

Description

This message indicates that the LSS (local subsystem) received an INAP message that does not contain the Service Key parameter.

Example

```
RLGHNCXA21W 99-12-18 18:59:23 EST  EAGLE 35.0.0
0101.1290    CARD 1103,A1   INFO   LSS: No INAP ServiceKey parameter
             SIO=03   OPC=   001-001-001  DPC=   002-002-002
             CDPA:  AI=52  SSN=005  TT=250
                    ADDR=ABCDEF1234567890ABCDE
             CGPA:  AI=43  PC=   001-001-001  SSN=002
             LSN=A1234567
```

Legend

SIO	Service information octet	OPC	Origination point code
DPC	Destination point code	CDPA	Called party address
AI	Address Indicator	SSN	Subsystem number
TT	Translation type	ADDR	Address
CGPA	Calling party address	PC	Point code
LSN	Linkset name		

Alarm Level

No alarm condition. The message is informational only.

Procedure

1. No action at the EAGLE 5 ISS is necessary.

1291 - LSS: No INAP CalledPartyNumber param

Description

This message indicates that the LSS (local subsystem) received an INAP message that does not contain an Called Party Number parameter.

Example

```
RLGHNCXA21W 99-12-18 18:59:23 EST  EAGLE 35.0.0
0101.1291  CARD 1103,A1   INFO   LSS: No INAP CalledPartyNumber param
             SIO=03   OPC=   001-001-001  DPC=   002-002-002
             CDPA:  AI=52  SSN=005  TT=250
                    ADDR=ABCDEF1234567890ABCDE
             CGPA:  AI=43  PC=   001-001-001  SSN=002
             LSN=A1234567
```

Legend

SIO	Service information octet	OPC	Origination point code
DPC	Destination point code	CDPA	Called party address
AI	Address Indicator	SSN	Subsystem number
TT	Translation type	ADDR	Address
CGPA	Calling party address	PC	Point code
LSN	Linkset name		

Alarm Level

No alarm condition. The message is informational only.

Procedure

1. No action at the EAGLE 5 ISS is necessary.

1292 - LSS: Parameters out of sequence

Description

This message indicates that the LSS (local subsystem) received a TCAP message in which the mandatory and conditional parameters are not in the correct sequence.

Example

```
RLGHNCXA21W 99-12-18 18:59:23 EST  EAGLE 35.0.0
0101.1292    CARD 1103,A1   INFO   LSS: Parameters out of sequence
             SIO=03   OPC=   001-001-001  DPC=   002-002-002
             CDPA:  AI=52  SSN=005  TT=250
                    ADDR=ABCDEF1234567890ABCDE
             CGPA:  AI=43  PC=   001-001-001  SSN=002
             LSN=A1234567
```

Legend

SIO	Service information octet	OPC	Origination point code
DPC	Destination point code	CDPA	Called party address
AI	Address Indicator	SSN	Subsystem number
TT	Translation type	ADDR	Address
CGPA	Calling party address	PC	Point code
LSN	Linkset name		

Alarm Level

No alarm condition. The message is informational only.

Procedure

1. No action at the EAGLE 5 ISS is necessary.

1293 - LSS: Invalid num of digits in INAP CdPN

Description

This message indicates that the LSS (local subsystem) received an INAP message containing an invalid number of digits in the Called Party Number (CdPN) parameter.

Example

```
RLGHNCXA21W 99-12-18 18:59:23 EST  EAGLE 35.0.0
0101.1293    CARD 1103,A1   INFO   LSS: Invalid num of digits in INAP CdPN
             SIO=03   OPC=   001-001-001  DPC=   002-002-002
             CDPA:  AI=52  SSN=005  TT=250
                    ADDR=ABCDEF1234567890ABCDE
             CGPA:  AI=43  PC=   001-001-001  SSN=002
             LSN=A1234567
```

Legend

SIO	Service information octet	OPC	Origination point code
DPC	Destination point code	CDPA	Called party address
AI	Address Indicator	SSN	Subsystem number
TT	Translation type	ADDR	Address
CGPA	Calling party address	PC	Point code
LSN	Linkset name		

Alarm Level

No alarm condition. The message is informational only.

Procedure

1. No action at the EAGLE 5 ISS is necessary.

1294 - Invalid digits in MAP MSISDN parameter

Description

This message indicates that no valid digits were found in the MAP MSISDN parameter.

Example

```
station1234 00-10-30 16:28:08 EST EAGLE 35.0.0
    0018.1294 CARD 1103,A    INFO  Invalid digits in MAP MSISDN parameter
                SIO=03   OPC=   001-001-001   DPC=   002-002-002
                SCCP MSG TYPE=04
                CDPA:  NI=1  RI=0    GTI=04     SSNI=1  PCI=1
                       TT=250  NP=04   NAI=010  ADDR=123456789012345678901
                       PC=   003-003-003  SSN=005
                CGPA:  NI=1  RI=0    GTI=04     SSNI=1  PCI=1
                       TT=100  NP=07   NAI=012  ADDR=01234567890123456789O
                       PC=   001-001-001  SSN=004
              LSN=A1234567  GTTSET=3  203 46
```

Legend

ADDR	Address	CDPA	Called party address
CGPA	Calling party address	GTI	Global title indicator
GTTSET	GTT Set Index	LSN	Linkset name
NAI	Nature of address indicator	NI	Network indicator value
NP	Numbering plan	PC	Point code
PCI	Point code indicator	RI	Routing indicator
SSN	Subsystem number	SSNI	Subsystem number indicator
TT	Translation type		
TRANSLATED PC	Translated point code		
TRANSLATED SS	Translated subsystem		

NOTE: If Global Title Translation is found, the GTTSET in which the translation is found appears. If Global Title Translation is not found, the GTTSET does not display.

Alarm Level

No alarm condition. The message is informational only.

Procedure

1. Change the message to have valid digits (digits length greater than 0) in the MSISDN parameter.

1295 - Translation PC is EAGLE 5 ISS’s

Description

This message indicates that the point code translation is invalid because it is one the EAGLE 5 ISS’s own point codes.

Example

```
station1234 00-10-30 16:28:08 EST EAGLE 35.0.0
    0018.1295 CARD 1103,A    INFO  Translation PC is EAGLE’s
                SIO=03   OPC=   001-001-001   DPC=   002-002-002
                SCCP MSG TYPE=04
                CDPA:  NI=1  RI=0    GTI=04  SSNI=1  PCI=1
                       TT=250   NP=04  NAI=010  ADDR=123456789012345678901
                       PC=   003-003-003  SSN=005
                CGPA:  NI=1  RI=0    GTI=04  SSNI=1  PCI=1
                       TT=100   NP=07  NAI=012  ADDR=01234567890123456789O
                       PC=   001-001-001  SSN=004
              LSN=A1234567  GTTSET=3  203 46
```

Legend

ADDR	Address	CDPA	Called party address
CGPA	Calling party address	GTI	Global title indicator
GTTSET	GTT Set Index	LSN	Linkset name
NAI	Nature of address indicator	NI	Network indicator value
NP	Numbering plan	PC	Point code
PCI	Point code indicator	RI	Routing indicator
SSN	Subsystem number	SSNI	Subsystem number indicator
TT	Translation type		
TRANSLATED PC	Translated point code		
TRANSLATED SS	Translated subsystem		

NOTE: If Global Title Translation is found, the GTTSET in which the translation is found appears. If Global Title Translation is not found, the GTTSET does not display.

Alarm Level

No alarm condition. The message is informational only.

Procedure

1. Change the translation point code for the entry to a non-EAGLE 5 ISS's point code. Provision the entity data from the EPAP/ELAP. Refer to the *EPAP Administration Manual* or the *ELAP Administration Manual*, and see the topic "Manage Network Entities" for details about changing this entity data.

1296 - Translation PC type is ANSI

Description

This message indicates that the point code translation is invalid because it is an ANSI point code.

Example

```
station1234 11-10-30 16:28:08 EST EAGLE 35.0.0
    0018.1296 CARD 1103,A    INFO  Translation PC type is ANSI
                SIO=03   OPC=   001-001-001   DPC=   002-002-002
                SCCP MSG TYPE=04
                CDPA:  NI=1  RI=0    GTI=04  SSNI=1  PCI=1
                       TT=250   NP=04  NAI=010  ADDR=123456789012345678901
                       PC=   003-003-003  SSN=005
                CGPA:  NI=1  RI=0    GTI=04  SSNI=1  PCI=1
                       TT=100   NP=07  NAI=012  ADDR=01234567890123456789O
                       PC=   001-001-001  SSN=004
              LSN=A1234567  GTTSET=3  203 46
```

Legend

ADDR	Address	CDPA	Called party address
CGPA	Calling party address	GTI	Global title indicator
GTTSET	GTT Set Index	LSN	Linkset name
NAI	Nature of address indicator	NI	Network indicator value
NP	Numbering plan	PC	Point code
PCI	Point code indicator	RI	Routing indicator
SSN	Subsystem number	SSNI	Subsystem number indicator
TT	Translation type		
TRANSLATED PC	Translated point code		
TRANSLATED SS	Translated subsystem		

NOTE: If Global Title Translation is found, the GTTSET in which the translation is found appears. If Global Title Translation is not found, the GTTSET does not display.

Alarm Level

No alarm condition. The message is informational only.

Procedure

1. Change the translation point code type to a non-ANSI type. Provision the point code type from the EPAP. Refer to the *EPAP Administration Manual* and see the topic "Manage Network Entities" for details about changing this entity data.

1297 - Invalid length of prefix/suffix digits

Description

This message indicates that the attempted digit action of prefixing or suffixing the entity ID is invalid because the combined length of the entity ID and GT digits is greater than 21 digits.

Example

```
station1234 11-10-30 16:28:08 EST EAGLE 35.0.0
    0018.1297 CARD 1103,A    INFO  Invalid length of prefix/suffix digits
                SIO=03   OPC=   001-001-001   DPC=   002-002-002
                SCCP MSG TYPE=04
                CDPA:  NI=1  RI=0    GTI=04  SSNI=1  PCI=1
                       TT=250   NP=04  NAI=010  ADDR=123456789012345678901
                       PC=   003-003-003  SSN=005
                CGPA:  NI=1  RI=0    GTI=04  SSNI=1  PCI=1
                       TT=100   NP=07  NAI=012  ADDR=012345678901234567890
                       PC=   001-001-001  SSN=004
              LSN=A1234567  GTTSET=3  203 46
```

Legend

ADDR	Address	CDPA	Called party address
CGPA	Calling party address	GTI	Global title indicator
GTTSET	GTT Set Index	LSN	Linkset name
NAI	Nature of address indicator	NI	Network indicator value
NP	Numbering plan	PC	Point code
PCI	Point code indicator	RI	Routing indicator
SSN	Subsystem number	SSNI	Subsystem number indicator
TT	Translation type		
TRANSLATED PC	Translated point code		
TRANSLATED SS	Translated subsystem		

NOTE: If Global Title Translation is found, the GTTSET in which the translation is found appears. If Global Title Translation is not found, the GTTSET does not display.

Alarm Level

No alarm condition. The message is informational only.

Procedure

1. Change the attempted digit action or decrease the length of the entity ID or the GT digits to a length of 21 digits or less. Provision the digit action or the entity ID length from the EPAP. Refer to the *EPAP Administration Manual* for details.

1298 - Updates inhibited: loading stability

Description

The SCCP card was auto inhibited because GTT and LNP are on at the same time. This is an invalid configuration.

Example

```
RLGHNCXA21W 00-02-07 12:01:43 EST  EAGLE 35.0.0
0014.1298   SYSTEM  INFO  Updates inhibited: loading stability
            CARD=1203   GPL=VSCCP
```

Alarm Level

No alarm condition. The message is informational only.

Procedure

1. No action necessary.

1299 - Updates allowed: loading stability

Description

The auto-inhibited SCCP card problem has been corrected. Updates are now allowed.

Example

```
RLGHNCXA21W 00-02-07 12:01:43 EST  EAGLE 35.0.0
0014.1299   SYSTEM  INFO  Updates allowed: loading stability
             CARD=1203   GPL=VSCCP
```

Alarm Level

No alarm condition. The message is informational only.

Procedure

1. No action necessary.

1300 - REPT EVT: Incremental Loading

Description

This message indicates the progress in downloading the SCCP database information to the applicable card or cards.

Example

```
RLGHNCXA21W 00-04-18 18:59:58 EST  EAGLE 35.0.0
0105.1300    SYSTEM     INFO   REPT EVT: Incremental Loading
             Database levels loaded  :  1 of 25
             Card list: 1101, 1103
```

Alarm Level

No alarm condition. The message is informational only.

Procedure

1. No corrective action is required.

1301 - SECMTPMATE - rcvd mate PC on non C-link

Description

This message indicates the EAGLE 5 ISS received a MTP message that failed the mate SID verification. The message was discarded.

Example

```
RLGHNCXA21W 00-04-18 18:59:58 EST  EAGLE 35.0.0
0105.1301   CARD 1205,A  INFO  SECMTPMATE - rcvd mate PC on non C-link
             SIO=0a   OPC= s-003-247-000  DPC= s-002-000-000
             DATA=12 34 56 78 90 12 34 56 78 90 12 34
                  56 78 90 12 34 56 78 90 12 34 56 78
             SR=scrb  LSN=A1234567
```

Legend

DATA	Information from the upper layers of SCCP management
DPC	Destination point code
LSN	Linkset name
OPC	Origination point code
SIO	Service information octet
SR	Screening reference name

Alarm Level

No alarm condition. The message is informational only.

Procedure

1. No action necessary.

1302 - SECMTPSID - rcvd MSU with OPC = SID

Description

This message indicates the EAGLE 5 ISS received a MTP message that failed the self SID verification. The message was discarded.

Example

```
RLGHNCXA21W 00-04-18 18:59:58 EST  EAGLE 35.0.0
0105.1302   CARD 1205,A  INFO  SECMTPSID - rcvd MSU with OPC = SID
             SIO=0a   OPC= s-003-247-000  DPC= s-002-000-000
             DATA=12 34 56 78 90 12 34 56 78 90 12 34
                  56 78 90 12 34 56 78 90 12 34 56 78
             SR=scrb  LSN=A1234567
```

Legend

DATA	Information from the upper layers of SCCP management
DPC	Destination point code
LSN	Linkset name
OPC	Origination point code
SIO	Service information octet
SR	Screening reference name

Alarm Level

No alarm condition. The message is informational only.

Procedure

1. No action necessary.

1303 - SECMTPSNM - no rte to OPC/AFTPC

Description

This message indicates the EAGLE 5 ISSEAGLE 5 ISS received a MTP network management message that failed the MTP Network Management Message OPC Verification. The message was discarded.

Example

```
RLGHNCXA21W 00-02-07 11:02:30 EST  EAGLE 35.0.0
0100.1303    CARD 1105,B  INFO   SECMTPSNM - no rte to OPC/AFTPC
             SIO=0a   OPC= s-003-243-000  DPC= s-000-024-000
             H0H1=41   AFTPC=s  099-099-003
             SR=osp3    LSN=A1234567
```

Legend

AFTPC	Affected point code (for SCCP messages)
DPC	Destination point code
H0H1	H0/H1 heading code
LSN	Linkset name
OPC	Origination point code
SIO	Service information octet
SR	Screening reference name

Alarm Level

No alarm condition. The message is informational only.

Procedure

1. No action necessary.

1304 - SECSCCPSCMG - no rte to AFTPC

Description

This message indicates the EAGLE 5 ISS received a MTP network management message that failed the SCMG AFTPC Verification. The message was discarded.

Example

```
RLGHNCXA21W 00-04-18 18:59:30 EST  EAGLE 35.0.0
0102.1304    CARD 1205,B  INFO   SECSCCPSCMG - no rte to AFTPC
             SIO=03  OPC=s  003-245-000  DPC=s  001-004-000
             SCMG:    TYPE=000  AFTPC=003-003-003
                      MULT=000  AFTSS=005
             SR=scrb  LSN=A1234567
```

Legend

AFTPC	Affected point code (for SCCP messages)
AFTSS	Affected subsystem (identifies the subsystem that failed)
DPC	Destination point code
LSN	Linkset name
MULT	SCCP management message multiplicity indicator
OPC	Origination point code
SCMG	SCCP management message
SIO	Service information octet
SR	Screening reference name
TYPE	SCCP management message type

Alarm Level

No alarm condition. The message is informational only.

Procedure

1. No action necessary.

1305 - MTP rcvd UPU - User SCCP, Cause invalid

Description

This message is generated for a UPU message for a SCCP user when the unavailability cause indicates a SCCP translation exists for a node that does not have a SCCP user part.

Example

```
RLGHNCXA21W 00-02-07 11:02:30 EST  EAGLE 35.0.0
0100.1305    CARD 1201,A  INFO   MTP rcvd UPU - user SCCP, Cause invalid
             SIO=03   OPC=   003-232-000  DPC=   001-004-000
             AFTPC=004-000-001  UPU=03  UNAVAIL CAUSE=001
             LSN=A1234567
```

Alarm Level

No alarm condition. The message is informational only.

Procedure

1. No action necessary.

1306 - GSMOPTS: EIR Global Response is ON

Description

The EIR Global Response Type is on. The EIR Global Response Type is set by the **chg-gsmopts** command and the **eirgrsp** parameter.

The Global Response Type is used to override the response that is returned to the MSC (Mobile Switching Center). The default value is OFF. When this parameter to OFF, the normal list logic is applied to the IMEI. If the Global Response Type is set to a value other than OFF, there is no list logic processing, and the response corresponding to the **eirgrsp** value is sent to the MSC.

For more information about **eirgrsp**, refer to the **chg-gsmopts** command in the *Commands Manual*.

Example

```
RLGHNCXA21W 03-08-18 19:09:14 EST  EAGLE 35.0.0
0140.1306  CARD 1201  INFO  GSMOPTS: EIR Global Response is ON
```

Alarm Level

No alarm condition. The message is informational only.

Procedure

1. No corrective action is required.

1307 - GSMOPTS: EIR Global Response is OFF

Description

The EIR Global Response Type is off. The EIR Global Response Type is set by the **chg-gsmopts** command and the **eirgrsp** parameter.

The Global Response Type is used to override the response that is returned to the MSC (Mobile Switching Center). The default value is OFF. When this parameter to OFF, the normal list logic is applied to the IMEI. If the Global Response Type is set to a value other than OFF, there is no list logic processing, and the response corresponding to the **eirgrsp** value is sent to the MSC.

For more information about **eirgrsp**, refer to the **chg-gsmopts** command in the *Commands Manual*.

Example

```
RLGHNCXA21W 03-08-18 19:09:14 EST  EAGLE 35.0.0
0140.1306  CARD 1201  INFO  GSMOPTS: EIR Global Response is OFF
```

Alarm Level

No alarm condition. The message is informational only.

Procedure

1. No corrective action is required.

1308 - Updates inhibited: Target -Cell CRC Fail

This message appears if the target-cell checksums do not match. This message, similar to UIM 1239, but including the table id, shall be issued by the Eagle User Interface (UI) for each event.

Example

```
station1234 96-08-01 16:28:08 EST EAGLE 35.0.0
1234.1308   SYSTEM INFO   Updates inhibited:Target-Cell CRC Fail
       CARD=1107 TABLE=50 OFFSET=XXXX TRGT CRC=1423697
```

Alarm Level

No alarm condition. The message is informational only.

Procedure

1. This is an automatic process and no action is necessary.

1309 - Updates inhibited: Source-Cell CRC Fail

If the source cell fails validation this message, similar to UIM 1239, but including the table id, shall be issued by the Eagle User Interface (UI) for each event.

Example

```
station1234 96-08-01 16:28:08 EST EAGLE 35.0.0
1234.1309   SYSTEM INFO   Updates inhibited:Source-Cell CRC Fail
       CARD=1107 TABLE=50 OFFSET=XXXX
```

Alarm Level

No alarm condition. The message is informational only.

Procedure

1. This is an automatic process and no action is necessary.

1310 - System Meas. Limit exceeded for LRN

Description

This UIM is issued if the Measurements Platform is not enabled and if the number of provisioned LRNs exceeds 100,000. When the limit of 100,00 is exceeded, this UIM is notification that the LNP LRN measurements report will be truncated, and additional LRN measurements will not be collected or reported.

Example

```
RLGHNCXA21W 00-04-18 19:09:14 EST  EAGLE 35.0.0
0140.1310  CARD 1201   INFO    System Meas. Limit exceeded for LRN
```

Alarm Level

No alarm condition. The message is informational only.

Procedure

1. You have two options if this UIM appears:

- Install the Measurements Platform to increase the reporting limits, or
- If you have any unused LRN entries, you can remove them such that the number of provisioned LRNs does not exceed the limit of 100,000.

1311 - System Meas. Limit exceeded for NPANXX

Description

This UIM is issued if the Measurements Platform is not enabled and if the number of provisioned NPANXXs exceeds 150,000. When the limit of 150,000 is exceeded, this UIM is notification that the LNP NPANXX measurements report will be truncated, and additional NPANXX measurements will not be collected or reported.

Example

```
RLGHNCXA21W 00-04-18 19:09:14 EST  EAGLE 35.0.0
0140.1311  CARD 1201  INFO   System Meas. limit exceeded for NPANXX
```

Alarm Level

No alarm condition. The message is informational only.

Procedure

1. You have two options if this UIM appears:
   - Install the Measurements Platform to increase the reporting limits, or
   - If you have any unused NPANXX entries, you can remove them such that the number of provisioned NPANXXs does not exceed the limit of 150,000.

1320 - FPT value unprovisioned for frame

Description

This UIM is periodically raised at hourly intervals, starting at the system initialization time, for all the provisioned frames if the Frame Power Threshold value is not provisioned for that frame.

Example

```
RLGHNCXA21W 00-04-18 19:05:43 EST  EAGLE 35.0.0
0021.1320    CARD 1113  INFO   FTP value unprovisioned for frame CF00
```

Alarm Level

No alarm condition. The message is informational only.

Procedure

1. Verify that the Frame Power Threshold value is not configured for the provisioned frame for which the UIM is generated by using the following command:

   rtrv-frm-pwr

2. Configure the appropriate Frame Power Threshold value for the frame using the following command:

   ent-frm-pwr

   Otherwise, notify the Customer Care Center about the generated UIM. Reference: “Customer Care Center” on page 1-13.

1321 - Eagle RTDB Birthdate Mismatch

Description

This message appears if the EAGLE 5 ISS connects to an ELAP and the birthdates do not match between the RTDB on the ELAP and the RTDB on the EAGLE 5 ISS.

Example

```
RLGHNCXA21W 00-04-18 19:09:14 EST  EAGLE 35.0.0
0008.1321  SYSTEM     INFO         Eagle RTDB Birthdate Mismatch
```

Alarm Level

No alarm condition. The message is informational only.

Procedure

1. Call the Customer Care Center. See “Customer Care Center” on page 1-13.

1322 - Eagle RTDB Levels Invalid

This message will appear if the EAGLE 5 ISS connects to an ELAP and the ELAP's RTDB db-level is less-than the EAGLE's RTDB db-level.

Example

```
RLGHNCXA21W 00-04-18 19:09:14 EST  EAGLE 35.0.0
0008.1322  SYSTEM     INFO         Eagle RTDB Levels Invalid
```

Alarm Level

No alarm condition. The message is informational only.

Procedure

1. Call the Customer Care Center. See “Customer Care Center” on page 1-13.

1323 - Eagle/Elap TN Quantity Mismatch

This message appears if the EAGLE 5 ISS connects to an ELAP that has a greater number of TNs provisioned than the EAGLE's quantity keys allow.

Example

```
RLGHNCXA21W 00-04-18 19:09:14 EST  EAGLE 35.0.0
0008.1323  SYSTEM     INFO         Eagle/Elap TN Quantity Mismatch
```

Alarm Level

No alarm condition. The message is informational only.

Procedure

1. Call the Customer Care Center. See “Customer Care Center” on page 1-13.

1324 - Eagle/Elap NPANXX Quantity Mismatch

This message appears if the EAGLE 5 ISS connects to an ELAP that has a greater number of NPANXXs provisioned than the EAGLE's quantity keys allow.

Example

```
RLGHNCXA21W 00-04-18 19:09:14 EST  EAGLE 35.0.0
0008.1324  SYSTEM     INFO    Eagle/Elap NPANXX Quantity Mismatch
```

Alarm Level

No alarm condition. The message is informational only.

Procedure

1. Call the Customer Care Center. See “Customer Care Center” on page 1-13.

1325 - Eagle/Elap LRN Quantity Mismatch

This message appears if the EAGLE 5 ISS connects to an ELAP that has a greater number of LRNs provisioned than the EAGLE's quantity keys allow.

Example

```
RLGHNCXA21W 00-04-18 19:09:14 EST  EAGLE 35.0.0
0008.1325  SYSTEM     INFO    Eagle/Elap LRN Quantity Mismatch
```

Alarm Level

No alarm condition. The message is informational only.

Procedure

1. Call the Customer Care Center. See “Customer Care Center” on page 1-13.

1326 - Eagle RTDB Depth Alert

RTDB data is stored as inverse tree structures the trees have a maximum depth allowed. This alarm indicates that the maximum depth has been reached for a tree. If the alarm was initiated during a data update, the update will continually fail until there is manual intervention.

Example

```
RLGHNCXA21W 00-04-18 19:09:14 EST  EAGLE 35.0.0
0008.1326  SYSTEM     INFO    Eagle RTDB Depth Alert
```

Alarm Level

No alarm condition. The message is informational only.

Procedure

1. Call the Customer Care Center. See “Customer Care Center” on page 1-13.

1330 - Mismatched UA Routing Context

This message is issued in the following scenarios:

1. If routing context is present in a M3UA Data message received by the Eagle, and no routing key for the receiving M3UA association contains a matching routing context value

2. If routing context is absent in a M3UA Data message received by the Eagle, and the receiving M3UA association's application server is referenced by a routing key containing routing context

3. If routing context is present in a M3UA ASP-Active or ASP-Inactive or DAUD message received by the Eagle, and no routing key for the receiving M3UA association contains a matching routing context value, then a UIM will be generated.

4. If routing context is present in a SUA message received by the Eagle, and no routing key for the receiving SUA association contains a matching routing context value

Example

```
RLGHNCXA21W 00-02-07 12:01:43 EST  EAGLE 35.0.0
3409.1330    CARD 1305,A   INFO      Mismatched UA Routing Context
             ANAME = m3ua_assoc_0003    M3UA RC=3
```

Legend

ANAME — The name of the M3UA or SUA Association. This is followed by the user adapter type (M3UA or SUA) and the value of the Routing Context received in the message. If the Routing Context is absent from the message, RC will be displayed as "none."

Alarm Level

No alarm condition. The message is informational only.

Procedure

1. The use of Routing Context in the Eagle Routing Key configuration and the use of the Routing Context by the far-end Application Server should be made to match so that they are either both using Routing Context –OR- they are both not using Routing Context.
2. Call the Customer Care Center. See "Customer Care Center" on page 1-13.

1331 - IP Route Table Entry Conflict

Description

A conflict exists between user configured static IP routes and dynamically added routes. (The Integrate Message Feeder application monitoring dynamically creates host specific IP routes to an IMF VIP address.) There are two scenarios in which such a conflict can result:

1. If an Integrated Message Feeder application receives a service accept message and attempts to add a host specific IP route for the IP address received in the service accept message and there is an user configured static IP route (entered by ENT-IP-RTE Eagle command) whose destination is the same IP address, then the route is not added and the UIM is sent indicating the route and result.

2. If a user enters a host specific IP route using the *ent-ip-rte* command and there currently exists a dynamically added route with the same destination IP address, then the dynamic route is deleted, the static route is added, and this UIM indicating the result is generated.

Examples

```
RLGHNCXA21W 00-02-07 12:01:43 EST  EAGLE 35.0.0
0003.1331 CARD 1213 INFO      IP Route Table Entry Conflict
            Dynamic IP Route Add Fail
            Destination = 172.130.155.110
            Gateway     = 172.120.154.111
            Mask        = 255.255.255.255
          Report “Date:02-02-21 Time:02:07:19
```

Alarm Level

No alarm condition. The message is informational only.

Procedure

1. Resolve the IP Address conflict. One must either change the Integrated Message Feeder application VIP address or delete the static IP address using the following command:

   dlt-ip-rte

1332 - Invalid Initial M2PA FSN Received

The Eagle received an initial M2PA DATA message with an invalid FSN (Forward Sequence Number). The expected FSN in M2PA for the first DATA message received after link alignment is 0 for M2PA RFC. Older versions of M2PA (before Draft 9) used an initial FSN of 1. This UIM indicates that the two ends of the link have mismatched configurations.

Eagle versions prior to 34.3 support M2PA Draft 6 but do not support M2PA RFC.

If both ends of the M2PA association are on Eagle release 34.3 or later, verify that both ends have the VER parameter set to match on the M2PA association (VER=D6 or VER=M2PA must be the same on both ends).

If one end of the M2PA association is on an Eagle release prior to 34.3 and the other is 34.3 or greater, verify that the association VER parameter in the later release is set to D6 for backward compatibility.

Example

```
RLGHNCXA21W 00-04-18 19:09:14 EST  EAGLE 34.3.0
5781.1332  CARD 1301,A    INFO    Invalid Initial M2PA FSN Received
```

Legend

FSN	Forward Sequence Number
M2PA	SS7 MTP2 - User Peer-to-Peer Adaptation Layer

Alarm Level

No alarm condition. The message is informational only. However, the link will not stay aligned and a link alarm will be present.

Procedure

1. To change the M2PA version used by the signaling link at the Eagle perform the following commands:
   - Use the dact-slk:loc=xxxx:link=yy command to deactivate the signaling link.
   - Use the chg-assoc:open=no command to close the M2PA association used by the signaling link.
   - Use the chg-assoc:ver=<d6/rfc> command to change the M2PA version on the association used by the signaling link to match the configured M2PA version of the M2PA peer.

- Use the chg-assoc:open=yes command to activate the M2PA association used by the signaling link
- Activate the signaling using the act-slk:loc=xxxx:link=yy command.

2. Otherwise change the M2PA version at the M2PA peer to match the version configured for the signaling link/association at the Eagle.

3. If the fault is not cleared call the Customer Care Center. See “Customer Care Center” on page 1-13.

1333 - IPGW RCVD MSG DISCARDED

Description

When processing a received PDU at the IPGWx L2 layer, various errors can be detected which cause the MSU to be pegged and discarded. The SG responds to a number of these MSU's with error messages and transmits them to the customer. Some scenarios exist where a received PDU causes an error to be pegged, the message to be discarded, and the SG to not respond with an error message. A new UIM is issued when a PDU excluding UA ERROR messages is received at the IPGWx L2 layer and results in the SG discarding the message plus pegging an error count. The generation of this UIM is paced (every 30 seconds), and in situations where multiple messages are discarded within a 30 second window of time, a UIM is only generated for the first message discarded.

Example

```
RLGHNCXA21W 00-02-07 12:01:43 EST  EAGLE 35.0.0
0003.1333 CARD 1305,A INFO      IPGW RCVD MSG DISCARDED
          IP CONNECTION NAME=LONGASSSOCNAME12 ADPTR=SUA
          REASON=Invalid Version (Error Code=0x02)
          DIAGNOSTIC=ASP UP Rcvd; Version=0x02
          Report Date:02-07-21 Time:16:20:19
```

Alarm Level

No alarm condition. The message is informational only.

Procedure

1. Table 3-22 summarizes why the UIM was issued. The "reason" text in the UIM identifies why the UIM was displayed. Look at the reason and take action based on that field. Most of the time, to correct the issue, the customer needs to stop issuing the message. The UIM's diagnostic field usually indicates which message was received.

Table 3-22. SG Received Messages Discarded

REASON MSG DISCARDED AND PEGGED	UIM 'REASON' TEXT	UIM 'DIAGNOSTIC' TEXT
PDU received with invalid version	Invalid Version (Error Code=0x01)	<msg rcvd> Rcvd; Version=<version value rcvd> Ex. ASP-Inactive Rcvd; Version=0x02

Table 3-22. SG Received Messages Discarded (Continued)

1. PDU has unsupported class 2. PDU received was M3UA DATA on an SUA Association. 3. PDU received was SUA CLDT/CLDR on an M3UA Association	Unsupported Message Class (Error Code=0x03)	Class=<Message Class Value>; Type=<Message Type Value> Ex: Class=0x09; Type=0x01
PDU has unsupported type	Unsupported Message Type (Error Code=0x04)	Type=<Msg Type Value >; Class=<Message Class Value > Ex: Type=0x15; Class=0x02
ASP-ACTIVE contains an unsupported traffic mode Type or a Traffic Mode Type that is inconsistent with the presently configured mode for the AS.	Unsupported Traffic Mode (Error Code=0x05)	<MSG> Rcvd; Mode=<traffic mode received > Ex : ASP-Active Rcvd; Mode=0x03
1. PDU received was DAVA/DUNA/DRST/DUPU in the ASP-Inactive/ASP-Active States(end nodes shouldn't generate these) 2. ASP-UP received while in ASP-ACTIVE state 3. ASP-ACTIVE received while in ASP-DOWN state	Unexpected Message (Error Code=0x06)	1. DUNA Msg Rcvd 2. DAVA Msg Rcvd 3. DRST Msg Rcvd 4. DUPU Msg Rcvd 5. ASP-UP Rcvd while in ASP-Act State 6. ASP-Act Rcvd while in ASP-Down State
1. PDU could not be decoded or invalid length. 2. ASP-UP-ACK/ASP-DOWN-ACK/ASP-ACTIVE-ACK/ASP-INACTIVE-ACK received in the ASP-Inactive/ASP-Active States while in server mode (not client) 3. ASP-INACTIVE-ACK received while in client mode and in ASP-ACTIVE state 4. CLDT/CLDR /DATA contains multiple routing contexts	Protocol Error (Error Code=0x07)	1. <Message> Decode Failed 2. <Message> Encode Failed 3. <Message> Length Invalid 4. ASP-UP-Ack Rcvd 5. ASP-Down-Ack Rcvd 6. ASP-Active-Ack Rcvd 7. ASP-Inactive-Ack Rcvd 8. M3UA to MTP3 Conversion Failed 9. <CLDT/CLDR> to SCCP Conversion Failed
ASP-UP received on a connection with ALW=NO	Refused Managment Blocking (Error Code=0x0d)	ASP-UP Rcvd when ALW=NO
Sent if a UA Message is received with an invalid parameter value.	Invalid Parameter Value (Error Code=0x11)	<msg rcvd> Rcvd; Value=<parameter value rcvd > Ex. ASP-Inactive Rcvd; Value=0x00000009

Table 3-22. SG Received Messages Discarded (Continued)

PDU has fixed length parameters of incorrect size	Parameter Field Error (Error Code=0x12)	<msg rcvd> Rcvd; Length=<invalid parameter length > Ex. ASP-Inactive Rcvd; Length=0x0200
Sent if a UA message received contains an invalid parameter.	Unexpected Parameter (Error Code=0x13)	<msg rcvd> Rcvd; Parm Tag=<parameter tag rcvd > Ex. DATA Rcvd; Parm Tag=0x0500
SUA DAUD PDU received lacks Routing Context and multiple RC's are configured for the connection	Destination Status Unknown (Error Code=0x14)	<msg rcvd> Rcvd; No RC Rcvd
1. Invalid Network Appearance value received in a M3UA message 2. DATA's network type doesn't match card's GPL type (M3UA only)	Invalid Network Appearance (Error Code=0x15)	1. <Msg Type> Rcvd; NA=<NA value rcvd > Ex: DAUD Rcvd; NA=0x00000011 2. DATA Network Type Mismatch
1. PDU is missing one or more mandatory parameters 2. DATA contains no routing context and the connection the PDU was received on is associated with more than 1 routing context	Missing Parameter (Error Code=0x16)	1. <Msg Type> Rcvd; Missing Tag=<tag value > Ex: CLDT Rcvd; Missing Tag= 0x0006 2. Hdr Len Invalid
1. ASP-ACTIVE received with routing context but no routing key(s) are provisioned for AS 2. CLDT/CLDR's network type doesn't match card's GPL type 3. PDU contains one or more routing contexts that could not be matched to one associated with the connection the PDU was received on	Invalid Routing Context (Error Code=0x19)	For this error code, use existing UIM "Mismatched UA Routing Context" in [16] only if the message is still processed. If the message is discarded, issue UIM format 62. <msg rcvd> Rcvd; RC=<routing context value> Ex: DAUD Rcvd; RC=0x00000008
ASP-ACTIVE received without routing context and no routing key(s) are provisioned for AS	No Configured AS for ASP (Error Code=0x1a)	<msg rcvd> Rcvd; No RC Configed
CLDT/CLDR/DATA received while in the ASP-Inactive State (server mode)	Invalid ASP State	1. CLDT Rcvd while in ASP-Inact State 2. CLDR Rcvd while in ASP-Inact State 3. DATA Rcvd while in ASP-Inact State

Table 3-22. SG Received Messages Discarded (Continued)

Received a PDU and no AS is configured	Association has no configured AS.	<MSG Type> Rcvd Ex: ASP-Active Rcvd
Received a MSU in an invalid link state	Link State not ISNR	MSU Rcvd; link state=<current link state> Ex. MSU Rcvd when link state OOS
Received an Invalid SCCP message type (TALI only)	Received Invalid SCCP Message Type	SIO=xx OPC=&&-###-###-### DPC=&&-###-###-###
Received an Invalid SCCP message class (TALI only)	Received Invalid SCCP Message Class	SIO=xx OPC=&&-###-###-### DPC=&&-###-###-###
SCCP called party information not present (TALI only)	SCCP Called Party Not Present	SIO=xx OPC=&&-###-###-### DPC=&&-###-###-###
SCCP calling party information not present (TALI only)	SCCP Calling Party Not Present	SIO=xx OPC=&&-###-###-### DPC=&&-###-###-###
A message was discarded and there is no error code.	No ERR Received	Reason Unknown
Attempting to assign the ASP ID while in the ASP Active or Inactive States.	Invalid ASP ID(Error Code=0xf)	ASP ID must be assigned in ASP-Down

1334 - IPGW TX MSG DISCARDED

Description

A new UIM is issued for message discards in the transmit path. The generation of this UIM is paced (every 30 seconds), and in situations where multiple messages are discarded within a 30-second window of time, a UIM is only generated for the first transmitted message that is discarded.

Example

```
RLGHNCXA21W 00-02-07 12:01:43 EST  EAGLE 35.0.0
0003.1334 CARD 1305,A INFO      IPGW TX MSG DISCARDED
          IP CONNECTION NAME=LONGASSSOCNAME ADPTR=M3UA
           REASON=M3UA Conversion Error
           DIAGNOSTIC=DATA TX Failed; UA Protocol Error
           Report Date:02-07-21 Time:16:20:19
```

Alarm Level

No alarm condition. The message is informational only.

Procedure

1. Correct the problem based on the “reason” text displayed. The following reasons listed in Table 3-23 cause a discard in the transmit path and appear in this UIM.

Table 3-23. SG Messages Discarded in the Transmit Path

UIM 'REASON' TEXT	UIM SPECIFIC TEXT
No SS7 Route to Destination	SIO=xx OPC=&&-###-###-### DPC=&&-###-###-###
No Routing Key Available	SIO=xx OPC=&&-###-###-### DPC=&&-###-###-###
No Connection Available for Point Code	SIO=xx OPC=&&-###-###-### DPC=&&-###-###-###
No Connection Available for Routing Key	SIO=xx OPC=&&-###-###-### DPC=&&-###-###-###
Congested Connection	SIO=xx OPC=&&-###-###-### DPC=&&-###-###-###
Invalid SCCP Message Type	Use existing UIM # 1023 - "SCCP rcvd unknown msg type". See reference [18].
Invalid SCCP Message Class	Use existing UIM # 1025 – "SCCP rcvd inv msg class". See reference [18].
Circular Routing	SIO=xx OPC=&&-###-###-### DPC=&&-###-###-###
Invalid SIO for SUA	SIO=xx OPC=&&-###-###-### DPC=&&-###-###-###
M3UA Conversion Error	MTP3 to M3UA Conversion Failed
SUA Conversion Error	<UDT/XUDT/UDTS/XUDTS> to SUA Conversion Failed
AS-Pending overflow	Max MSUs queued for pended AS or Admin removal of Pended AS/Rtekey
AS Timer TR Expired	<# of buffers in queue> Pended MSUs discarded Ex: 5 Pended MSUs discarded
Reroute Failure	SIO=xx OPC=&&-###-###-### DPC=&&-###-###-###
Unexpected for APC	SIO=xx OPC=&&-###-###-### DPC=&&-###-###-###

1335 - Table Information

Description

An update to the SCCP contained an invalid table identifier.

Example

```
RLGHNCXA21W 00-02-07 12:01:43 EST  EAGLE 35.0.0
0003.1335  CARD 1105   INFO     Table Information
                                Table 4294967296 Invalid Table ID
           Report Date:02-07-21 Time:16:20:19
```

Alarm Level

No alarm condition. The message is informational only.

Procedure

1. No action is necessary.

1336 - IPGW UA ERROR MSG RECEIVED

Description

This UIM is issued for message discards in the transmit path. The generation of this UIM is paced (every 30 seconds), and in situations where multiple messages are discarded within a 30-second window of time, a UIM is only generated for the first transmitted message that was discarded.

This UIM is being displayed because the customer is sending an error message to the SG. The following is a list of all the possible error codes that can appear in the UIM for received UA ERROR messages. Each one has the error code appended in parenthesis.

- Invalid Version (0x01)
- Unsupported Message Class (0x03)
- Unsupported Message Type (0x04)
- Unsupported Traffic Mode (0x05)
- Unexpected Message (0x06)
- Protocol Error (0x07)
- Invalid Stream Identifier (0x09)
- Refused Management Blocking (0x0d)
- ASP Identifier Required (0x0e)
- Invalid ASP Identifier (0x0f)
- Invalid Parameter Value (0x11)
- Parameter Field Error (0x12)
- Unexpected Parameter (0x13)
- Destination Status Unknown (0x14)
- Invalid Network Appearance (0x15)
- Missing Parameter (0x16)
- Invalid Routing Context (0x19)
- No Configured AS for ASP (0x1a)
- Subsystem Status Unknown (0x1b)
- Invalid Loadsharing Label (0x1c)

Example

```
RLGHNCXA21W 00-02-07 12:01:43 EST  EAGLE 35.0.0
0003.1336 CARD 1305,A INFO      IPGW UA ERROR MSG RECEIVED
          IP CONNECTION NAME=association1 ADPTR=M3UA
           ERROR CODE=Missing Parameter (0x16)
           Report Date:02-07-21 Time:16:20:19
```

Alarm Level

No alarm condition. The message is informational only.

Procedure

1. No action is necessary.

1337 - UA HEARTBEAT TIMEOUT

Description

If T(beat ack) expires before a Heartbeat Ack message is received from the customer, the association is torn down. A new UIM is issued when the association is torn down and the existing format I53 is used for this UIM. The generation of this UIM is paced (every 30 seconds).

Example

```
RLGHNCXA21W 00-02-07 12:01:43 EST  EAGLE 35.0.0
0003.1337 CARD 1305,A   INFO      UA HEARTBEAT TIMEOUT
          ANAME = LONGASSOCNAME1  M3UA
```

Legend

ANAME Long Association Name

Alarm Level

No alarm condition. The message is informational only.

Procedure

1. If this UIM is displayed on the screen, then the connection is torn down. Need to follow steps to reestablish the connection.

2. If this scenario keeps repeating after reestablishing a connection, then there is a problem with the connection and that will need to be investigated.

1338 - SCCP did not route - no PC in CgPA

Description

GTT on CgPA PC is required, but CgPA PC is not present in the MSU.

Example

```
RLGHNCXA21W 00-04-18 19:02:05 EST  EAGLE 35.0.0
0112.1338  CARD 1103,A1  INFO  SCCP did not route - no PC in CgPA
           SIO=03   OPC=   001-001-001     DPC=   002-002-002
           SCCP MSG TYPE=04
           CDPA:  NI=1  RI=0    GTI=04  SSNI=1  PCI=1
                  TT=250   NP=04  NAI=010  ADDR=123456789012345678901
                  PC=   003-003-003  SSN=005
           CGPA:  NI=1  RI=0    GTI=02 SSNI=1  PCI=1
                  TT=100   NP=07  NAI=012  ADDR=012345678901234567890
                  PC=   001-001-001  SSN=004
           LSN=A1234567
```

Legend

ADDR	Address	CDPA	Called party address
CGPA	Calling party address	DPC	Destination point code
GTI	Global title indicator	LSN	Linkset name
MSG TYPE	Message type	NAI	Nature of address indicator
NI	Network indicator value	NP	Numbering plan
OPC	Origination point code	PC	Point code
PCI	Protocol control information	RI	Routing indicator
SIO	Service information octet	SSN	Subsystem number
SSNI	Subsystem number indicator	TT	Translation type

Alarm Level

No alarm condition. The message is informational only.

Procedure

1. No action is necessary.

1339 - SCCP did not route - no dflt Clg PC Set

Description

GTT on CgPA is required, CgPA GTI=0, so GTT on CgPA PC is attempted, but the default CgPA PC set in the SCCPOPTS table is not provisioned.

Example

```
RLGHNCXA21W 00-04-18 19:02:05 EST  EAGLE 35.0.0
0112.1339  CARD 1103,A1  INFO  SCCP did not route - no dflt Clg PC Set
           SIO=03   OPC=001-001-001     DPC=   002-002-002
           SCCP MSG TYPE=04
           CDPA:  NI=1  RI=0    GTI=04  SSNI=1  PCI=1
                  TT=250   NP=04  NAI=010  ADDR=123456789012345678901
                  PC=   003-003-003  SSN=005
           CGPA:  NI=1  RI=0    GTI=02 SSNI=1  PCI=1
                  TT=100   NP=07  NAI=012  ADDR=01234567890123456789O
                  PC=   001-001-001  SSN=004
           LSN=A1234567
```

Legend

ADDR	Address	CDPA	Called party address
CGPA	Calling party address	DPC	Destination point code
GTI	Global title indicator	LSN	Linkset name
MSG TYPE	Message type	NAI	Nature of address indicator
NI	Network indicator value	NP	Numbering plan
OPC	Origination point code	PC	Point code
PCI	Protocol control information	RI	Routing indicator
SIO	Service information octet	SSN	Subsystem number
SSNI	Subsystem number indicator	TT	Translation type

Alarm Level

No alarm condition. The message is informational only.

Procedure

1. This indicates that Enhanced GTT was attempted, but the GTT selectors lookup failed. GTT selectors are GTI & TT (along with NP & NAI for ITU MSUs with GTI=4). If this MSU should have been routed, continue to Step 2.

2. Use the following command to check whether GTT selectors in the arrived MSU are provisioned in SCCPOPTS table:

   rtrv=sccpopts

3. If the SCCPOPTS table does not have an entry with the GTT selectors in the arrived MSU, use the following command to add a record with the GTT selectors in the arrived MSU to the SCCPOPTS table:

   ent-sccpopts

1340 - REPT COND: TRBL resynch required

Description

Under conditions of prolonged, high alarm activity the alarm processing capacity of the EAGLE 5 ISS can be reached. In an effort to keep the internal state machine current, alarms normally generated to the UI are discarded.

Under this scenario, when alarm processing recovers sufficiently, this message is generated to indicate to the attached network or element management systems that they should resynchronize with the EAGLE 5 ISS.

The generation of this message is expected to be limited to large configurations during severe outages, and the expected occurrence rate of this message is low; however, it has been added as a precaution. Although alarms may have been discarded, the internal alarm state of the EAGLE 5 ISS has been maintained and is stable.

Example

```
tekelecstp 99-03-09 12:01:43 EST  EAGLE 35.0.0
5061.1340   SYSTEM    INFO  REPT COND: TRBL resynch required
```

Alarm Level

No alarm condition. The message is informational only.

Procedure

1. The attached network or element management systems (such as Harris NetBoss) should use this message as an indication that they should perform the following command to synchronize alarm status with the EAGLE 5 ISS:

rept-stat-trbl

NOTE: Network or element management systems attached thru terminals configured as EMSALM type terminals must not filter this message. Please see the chg-trm command in the Commands Manual for further details.

1349 - MSU invalid size – discarded

Description

An MSU less than 5 bytes or greater than 279 bytes was detected by the MTP layer 3 software in an ATM card. A four byte MSU may cause the ATM connection to bounce (four byte PDUs are used for SSCF control). MSU length limit is 279 bytes.

Example

```
Station1234 06-07-21 16:28:08 EST Rel 35.1.0-56.28.0
0010.1004    CARD 1205,B   INFO     MSU invalid size – discarded
                 LEN=4
                 SIO=15   OPC=001-001-001    DPC=002-002-002
                 LSN=ABCD123
                 Report Date:06-07-21  Time:16:20:19
```

Alarm Level

No alarm condition. The message is informational only.

Procedure

1. No action necessary.

1490 - Telnet terminal connection successful

Description

Indicates that a telnet connection has been established with the EAGLE 5 ISS from the specified location, but no terminal has yet been selected.

Example

```
RLGHNCXA21W 00-04-18 18:59:30 EST  EAGLE 35.0.0
0102.1490    CARD 1105,B  INFO   Telnet terminal connection successful
             RIPADDR=192.168.57.52
             RIPORT=2336
             LIPADDR=192.168.53.46
             LIPORT=23
```

Legend

LIPADDR	Local IP Address
LIPORT	Local TCP Port Number
RIPADDR	Remote IP Address
RIPORT	Remote TCP Port Number

Alarm Level

No alarm condition. The message is informational only.

Procedure

1. No action necessary.

1491 - Terminal enabled

Description

This message indicates that the specified telnet terminal has been successfully selected by a user via telnet.

Example

```
RLGHNCXA21W 00-04-18 18:59:30 EST  EAGLE 35.0.0
0105.1491    SYSTEM     INFO   Terminal enabled.
             TERMINAL 20
```

Alarm Level

No alarm condition. The message is informational only.

Procedure

1. No action necessary.

1492 -Terminal failed

Description

This message indicates that the specified telnet terminal has been disconnected.

Example

```
RLGHNCXA21W 00-04-18 18:59:30 EST  EAGLE 35.0.0
0105.1492    SYSTEM     INFO   Terminal failed.
             TERMINAL 20
```

Alarm Level

No alarm condition. The message is informational only.

Procedure

1. No action necessary.

1493 -SSH Host Keys Regenerated

Description

This message indicates that the OA&M IP Security Enhancements feature has successfully generated new host pubic/private key pairs. This occurs during cold restarts of an IPSM card. During initialization, this UIM displays the new key.

NOTE: This UIM indicates a new public/private key is in effect. The old key is now invalid. The new key must be installed on SSH clients (on the FTRA) before any connections are permitted.

Example

```
RLGHNCXA21W 03-08-18 18:59:30 EST  EAGLE 30.2.0
0105.1493    SYSTEM     INFO   SSH Host Keys Regenerated
             DSA Server Host Key FTRA-formatted Fingerprint=
             xx xx xx xx xx xx xx xx xx xx xx xx xx xx xx xx
```

Alarm Level

No alarm condition. The message is informational only.

Procedure

1. Record the DSA Server Host Key FTRA-formatted fingerprint that is in the last line of the UIM.
2. Save the fingerprint.

   The fingerprint will be installed on the FTRA if the FTP Retrieve and Replace feature is used.

   NOTE: Refer to the *FTP-Based Table Retrieve Application (FTRA) User Guide* **for the fingerprint installation procedure.**

1494 -SSH Host Keys Loaded

Description

This message indicates that the OA&M IP Security Enhancements feature has successfully preserved existing host pubic/private key pairs. This occurs during reloads, init-card, and alw-card operations. During initialization, this UIM shows the state of the existing host key.

Example

```
RLGHNCXA21W 03-08-18 18:59:30 EST  EAGLE 30.2.0
0105.1494    SYSTEM     INFO   SSH Host Keys Loaded
             DSA Server Host Key FTRA-formatted Fingerprint=
             xx xx xx xx xx xx xx xx xx xx xx xx xx xx xx xx
```

Alarm Level

No alarm condition. The message is informational only.

Procedure

1. No action necessary.

1495 - Awaiting LSMS bulk download

Description

This UIM is issued after the CHG-DB:ACTION=BEGINEDL command is successfully processed. It repeats at 5 minute intervals thereafter until the database download stream from the LSMS begins. As soon as the LSMS starts sending data, UIM 1496: “LSMS bulk download in progress” is issued instead.

Example

```
tekelecstp 99-03-09 12:01:43 EST  EAGLE 35.0.0
5061.1495   SYSTEM      INFO  Awaiting LSMS Bulk Download
```

Alarm Level

No alarm condition. The message is informational only.

Procedure

1. No action necessary.

1496 - LSMS bulk download in progress

Description

This UIM is issued as soon as the first bulk download record is received from the LSMS, and then at 5 minute intervals thereafter, until the LSMS signals to the system that the entire download stream has been sent. This UIM lets the operator now that the LSMS has actually started sending the DB download stream to the system, and that the transmission of the download stream is still underway.

Example

```
tekelecstp 99-03-09 12:01:43 EST  EAGLE 35.0.0
5061.1496   SYSTEM      INFO  LSMS bulk download in progress
```

Alarm Level

No alarm condition. The message is informational only.

Procedure

1. No action necessary.

1497 - LSMS bulk download complete

Description

This UIM is issued as LSMS signals to the system that the entire download stream has been transmitted. The system operator may now complete the bulk download progress by issuing one of the following:

- CHG-DB:ACTION=FINISHEDL command to copy the LNP DB from the BLM card to the OAM fixed disks,

  or

- CHG-DB:ACTION=CANCELEDL command to prevent the copy to the OAM fixed disks

Example

```
tekelecstp 99-03-09 12:01:43 EST  EAGLE 35.0.0
5061.1497   SYSTEM      INFO  LSMS bulk download complete
```

Alarm Level

No alarm condition. The message is informational only.

Procedure

1. No action necessary.

1498 - LSMS bulk download cancelled at LSMS

Description

This UIM is issued when LSMS signals to the system that the bulk download has been cancelled at the LSMS GUI. The UIM informs the system operator that the bulk download is no longer in progress. The operator can cancel the bulk download (from the system) by issuing CHG-DB:ACTION=CANCELEDL, which will once again allow the system to accept LNP DB update requests.

Example

```
tekelecstp 99-03-09 12:01:43 EST  EAGLE 35.0.0
5061.1498   SYSTEM    INFO  LSMS bulk download cancelled at LSMS
```

Alarm Level

No alarm condition. The message is informational only.

Procedure

1. No action necessary.

4

Measurements

Contents ..... Page

Introduction 4-4

OAM Based Measurements 4-5

Measurements Platform 4-6

Report Parameters 4-12

Reports 4-13

STP System Totals (SYSTOT) Measurements 4-13

enttype=stp 4-13

enttype=tt 4-19

enttype=stplan 4-23

Component Measurements 4-25

enttype=lnkset 4-25

enttype=link 4-29

Network Management Measurements 4-33

enttype=stp 4-33

enttype=link 4-37

enttype=lnkset 4-40

Daily Availability Measurements 4-41

Day-To-Hour Availability Measurements 4-44

Availability Measurements 4-46
enttype=link 4-46
enttype=stplan 4-50
Daily Maintenance Measurements 4-54
enttype=stp 4-54
enttype=link 4-58
enttype=lnkset 4-63
enttype=lnp 4-64
enttype=np 4-70
enttype=stplan 4-74
enttype=mapscrn 4-77
Day-to-Hour Maintenance Measurements 4-82
enttype=stp 4-82
enttype=link 4-86
enttype=lnkset 4-91
enttype=stplan 4-92
Hourly Maintenance Measurements 4-95
enttype=lnp 4-95
enttype=np 4-101
enttype=mapscrn 4-106
Gateway Measurements 4-111
enttype=stp 4-111
enttype=origni 4-113
enttype=origninc 4-114
enttype=lnkset 4-115
enttype=lsdestni 4-118
enttype=lsorigni 4-119

Record Base Measurements....4-122
enttype=stp....4-123
enttype=lnkset....4-126
enttype=link....4-127
Maintenance Status Reports....4-129
enttype=link....4-130
enttype=lnkset....4-133

Introduction

This section describes EAGLE 5 ISS measurements. Measurements provide support for:

- STP performance management
- SS7 traffic monitoring and engineering
- Specific feature performance analysis (STPLAN)

Measurements provide operations and maintenance personnel with network performance and STP performance data in accordance with:

- Telcordia GR-82-CORE, Issue 5, December 2001
- Telcordia GR-310-CORE, Issue 1, November 1994
- Telcordia GR-478-CORE, Issue 4, Februar
- 2000
- Telcordia GR-778-CORE, Issue 1, November 1994
- Telcordia GR-2878-CORE, Issue 4, December 1999

The primary functions of Measurements are as follows:

- Collection: Measurements are collected at 5, 30, and 60-minute intervals.
- Storage: Measurements are stored in dedicated RAM tables and/or disks after collection. Most are retained for 24 hours. LNP, INP, G-Port, MAP Screening, and Daily EIR measurements are retained for 7 days.
- Retrieval: Measurements data is retrieved from the RAM storage area and/or disk. ACTIVE measurement data is retrieved and reported from the application cards.
- Reporting: Measurement reports are available on-demand/scheduled as follows:

  30-minute intervals (scheduled and on-demand)

  cumulative day-to-hour (on-demand)

  daily (scheduled and on-demand)

  hourly LNP and INP (scheduled and on-demand)

  active 5 minute data (on-demand)

  optional 15-minute interval (refer to “Optional 15-Minute Measurements” on page 4-10)

There are twelve types of measurement reports on the EAGLE 5 ISS. The measurement reports fall into four categories. The categories and types of measurement reports are as follows:

Traffic Engineering Reports

- STP system totals (SYSTOT)
- Component measurements (COMP)

- Network management (NM)

Error Tracking/Troubleshooting Reports

- Daily availability (AVLD)
- Day-to-hour availability (AVLDTH)
- Availability (AVL)

Daily Maintenance Reports

- Daily maintenance measurements (MTCD)
- Day-to-hour maintenance measurements (MTCDTH)
- Hourly maintenance measurements (MTCH)

Network Usage Reports

- Gateway (GTWY)
- Record Base (RBASE)

Maintenance Status Reports

- Maintenance Status Indicators (MTCS)

OAM Based Measurements

The collection of measurements is a separate task from reporting. Measurements collection is activated automatically upon system power-up, or through administrative commands. Collection is organized by ENTTYPE and reporting period. Collection occurs per link every 5 minutes, and separately every 30 minutes. Measurements are generated on the application cards and periodically collected by the OAM and stored for later retrieval on the TDMs. The command related to measurements collection is *chg-meas*.

Reports can be scheduled or printed on-demand. Scheduled measurements are directed to the Traffic Unsolicited Output Message group. No other unsolicited output is sent to this output group. Scheduled and on-demand reports are accessible by the following administrative commands:

- *chg-meas* -Turns collection on/off and schedules automatic report generation.
- *rtrv-meas-sched* -Verifies collection state and automatic report schedules.
- *rept-meas* - Generates individual measurement reports for schedule-enttype-entid combinations.
- *chg-trm* - Used to configure terminals to collect measurement reports on a system that contains less than 700 links.

Refer to the *System Administration Manual - System Management* for information on configuring the measurements terminal.

Before a report is printed, measurement collection must be activated. Refer to the *Commands Manual* for more information on how to use measurement commands.

Measurements Platform

The Measurements Platform is reqiured for an EAGLE 5 ISS with more than 700 links. It provides a dedicated processor for collecting and reporting STP, LNP, INP, G-FLEX, G-PORT, and EIR measurements data. The platform consists of multiple Measurement Collection and Polling Module (MCPM) cards in a primary/secondaries configuration, in which a single primary MCPM performs all collection and reporting functions. The secondary MCPM cards serve as backup for the primary. The EAGLE 5 ISS interface is via the standard IMT bus and allows communications with the network elements and the OAM. The interface to the customer's network supports the FTP transfer of Measurements reports to an FTP server.

The Primary MCPM maintains constant communication with all Secondary cards as a way of each monitoring the health status of the other. If the primary MCPM fails before or during collection, a secondary MCPM card assumes the Primary role and begins/continues collection.

Enabling the Measurements Platform feature (feature bit is turned on), allows the Measurements Platform to be provisioned and tested without transferring measurement functionality from the OAM to the Platform. Once the Platform hardware, software, and ethernet connections have been provisioned and verified, the transfer of measurements functionality from the OAM to the Measurement Platform is initiated by setting the *Measurements Platform Installed* bit, which is set by the system only once. From the point that the *Measurements Platform Installed* bit is set and initial data transfer has occurred, the measurements functionality of the OAM is limited to operator interface for measurement configuration and on-demand report requests. The Measurements Platform assumes the collection duties and stores the collected data in MCPM RAM. Following collection, scheduled reports are automatically generated and transferred to the customer's FTP server via the FTP interface.

NOTE: Existing FTP file server reports are overwritten by subsequent requests that produce the identical file name.

Reports can be scheduled or printed on-demand. Scheduled and on-demand reports are accessible by the following administrative commands:

- *chg-measopts* - Used to enable or disable the automatic generation and FTP transfer of scheduled measurement reports to the FTP server.
- *rept-stat-meas* - Reports the status of the measurements subsystem including card location and state, Alarm level, and Subsystem State.
- *rept-ftp-meas* - Manually initiates generation and FTP transfer of a measurements report from the MCPM to the FTP server.
- *rtrv-measopts* - Generates a user interface display showing the enabled/disabled status of all FTP scheduled reports.

Refer to the *Commands Manual* for more information on how to use measurement commands.

Report files are divided into three sections:

1. System header
2. Individual report header
3. Report data

The system header size varies depending on embedded data. A typical size of 250 bytes is used in all calculations in the examples in this manual. The report header size varies depending on the report type, but is always the same size for an individual report type. The size of the report data section varies depending on the number of entities being reported, and the particular data items being reported for each entity (i.e. a count of 0 versus a large count). For the estimates given in this manual, 6 characters are assumed for each data item, including the comma delimiter. Other variable quantities, such as the number of entities in the report, are stated with each example. The output file sizes calculated in this manual are rough estimates only. They are not intended to be an exact representation of output file size, which could vary significantly depending on the configuration of a particular system.

Table 4-1. Measurements Platform System Header

Field Name	Description	Unit
CLLI	The Common Language Location Identifier for the STP	ASCII Text
SWREL	The software release currently running on the STP	ASCII Text
RPTDATE	The date on which the report was generated	YYYY-MM-DD
RPTIME	The time at which the report was generated (24 hour clock)	HH:MM:SS
TZ	An abbreviation for the time zone	ASCII Text
RPTTYPE	The type of report being generated	ASCII Text
RPTPD	The period of the report	ASCII Text
IVALDATE	The date for the report interval	YYYY-MM-DD
IVALSTART	The starting time of the report interval	HH:MM:SS
IVALEND	The ending time of the report interval	HH:MM:SS
NUMENTIDS	The number of entities contained in the report	Integer

Example header format:

```
"CLLI","SWREL","RPTDATE","RPTIME","TZ","RPTTYPE","RPTPD","IVALDATE",
"IVALSTART","IVALEND","NUMENTIDS"<cr><lf>
"tekelecstp","35.0.0-39.1.0","1999-01-17","15:51:37","EST",
"STP SYSTEM TOTAL MEASUREMENTS ON
STP","LAST","1999-01-17","15:00:00","15:30:00",1<cr><lf>
<cr><lf>
```

File Naming Conventions

CLLI-based Names Disabled

File names consist of three fields, separated by underscores, followed by the *.csv* extension so that the files can be readily identified as comma seperated variable format. Due to the overall length of the file names, long file names (beyond 8.3 format) are utilized The three fields in the name are:

1. Up to 13 characters for the report type (sched-entity, i.e. systot-stp, mtcdth-lnkset)

2. 8 characters for the report date (yyyymmdd). This reflects the date the data is generated.

3. 4 characters for the ending report time (hhmm). This is defined as the common boundary between the end of the last period and the beginning of the next period. For example, the half hour from 2:00PM to 2:30PM would end at 1430. A day-to-hour period ends on the hour. A daily period or specific request for the final hour or half-hour of a day ends at 2400, midnight.

Output file name examples:

Half hourly STP system totals generated 1999-02-24 at 15:22:00 for the last period would be (the period from 1430 to 1500 on 02/24/99):

`systot-stp_19990224_1500.csv`

Maintenance daily linkset report generated 2001-07-17 at any time would be (the period from 0000 to 2400 on 07/16/01):

`mtcd-lnkset_20010716_2400.csv`

Maintenance day-to-hour link report generated 2003-04-29 at 08:32:00 would be (the period from 0000 to 0800 on 04/29/03):

`mtcdth-link_20030429_0800.csv`

Half hourly STP system totals generated 1999-02-23 at 00:15:20 for the specific end time 0030 would be (the period from 0000 to 0030 on 02/23/99):

`systot-stp_19990223_0030.csv`

Half hourly STP system totals generated 1999-02-24 at 00:15:30 for the specific end time 2330 would be (the period from 2300 to 2330 on 02/23/99):

`systot-stp_19990223_2330.csv`

Half hourly STP system totals generated 1999-02-24 at any time for the specific end time 2400 or 0000 would be (the period from 2330 to 2400 on 02/23/99):

`systot-stp_19990223_2400.csv`

Some applications will reformat fields when opening the .csv file. Use a text editor when opening .csv files to examine file content as presented in output file examples in this document.

CLLI-based Names Enabled

File names consist of four fields, seperated by underscores, followed by the *.csv* extension so that the files can be readily identified as comma seperated variable format. The four fields in the name are:

1. Up to 11 characters for the CLLI of the EAGLE 5 ISS.

2. Up to 13 characters for the report type (sched-entity, i.e. systot-stp, mtcdth-lnkset)

3. 4 characters for the report date (mmdd) This reflects the date the data is generated.

4. 4 characters for the ending report time (hhmm). This is defined as the common boundary between the end of the last period and the beginning of the next period. For example, the half hour from 2:00PM to 2:30PM would end at 1430. A day-to-hour period ends on the hour. A daily period or specific request for the final hour or half-hour of a day ends at 2400, midnight.

Output file name examples:

Half hourly STP system totals generated 02-24 at 15:22:00 for the last period would be (the period from 1430 to 1500 on 02/24:

wnrtpaah01w_systot-stp_0224_1500.csv

Maintenance daily linkset report generated 07-17 at any time would be (the period from 0000 to 2400 on 07/16:

wnrtpaah01w_mtcd-lnkset_0716_2400.csv

Maintenance day-to-hour link report generated 04-29 at 08:32:00 would be (the period from 0000 to 0800 on 04/29:

wnrtpaah01w_mtcdth-link_0429_0800.csv

Half hourly STP system totals generated 02-23 at 00:15:20 for the specific end time 0030 would be (the period from 0000 to 0030 on 02/23):

wnrtpaah01w_systot-stp_0223_0030.csv

Half hourly STP system totals generated 02-24 at 00:15:30 for the specific end time 2330 would be (the period from 2300 to 2330 on 02/23):

wnrtpaah01w_systot-stp_0223_2330.csv

Half hourly STP system totals generated 1999-02-24 at any time for the specific end time 2400 or 0000 would be (the period from 2330 to 2400 on 02/23/99):

wnrtpaah01w_systot-stp_0223_2400.csv

Some applications will reformat fields when opening the .csv file. Use a text editor when opening .csv files to examine file content as presented in output file examples in this document.

Optional 15-Minute Measurements

The Measurements Platform has the capability to collect and report STP, link, and linkset measurements on a 15-minute basis. All of the measurements available for 30-minute collection are available every 15 minutes when the feature option is operational.

The feature is controlled by a feature access key and a measurement option. Turning on the feature requires a part number. The feature cannot be turned off once turned on. It is a Permanently ON feature. Upon turn on, the collection period defaults to the 30-minute option. Refer to the *Database Administration Manual - System Management* for details on implementing the 15-minute measurements feature.

The feature becomes operational when the collection period has been changed to 15 minutes. The collection period is changed from 30 minutes to 15 minutes (and vice versa) by using the *chg-measopts:collect15min* command. Refer to the *Commands Manual* for detailed usage information. When the 30-minute option is selected, measurements data is collected and reported each half-hour at hh:00 and hh:30. When the 15-minute option is selected, measurements data is collected and reported four times each hour at hh:00, hh:15, hh:30, and hh:45. The current state of the option is displayed with the Measurements Platform options. Report types supported by 15 minute measurements are:

- systot
- comp
- gtwy
- avl

After 15-minute measurements collection and reporting is operational, 15-minute reports are retrieved using *rept-meas* or *rept-ftp-meas* commands. Refer to the *Commands Manual* for detailed usage information.

Data Collection Details

The various scenarios for making 15-minute collection operational, and the impact on data collection are shown in Table 4-2. The first column specifies the four quarter-hour intervals during which 15-minute collection could be made operational. The second column identifies the impact of making 15-minute collection operational during the specified time window. If 15-minute collection is made operational during the first or third quarter hour, there is no impact on the collected data. If 15-minute collection is made operational during the second or fourth quarter hour, the data that is collected and stored for that quarter-hour actually represents 30 minutes of data. This is not an error and no measurements data is lost. Rather it is a side effect of making 15-minute collection operational after the previous quarter-hour boundary has already passed.

Table 4-2. Enabling 15-Minute Measurements - Impacts

Time Window for Making 15-Minute Measurements Operational	Impact on Data Collection	Data Loss
xx00 to xx15	15 minutes of data will be collected for the quarter-hour xx15	None
xx15 to xx30	The xx15 interval will contain no data. The xx30 interval will contain 30 minutes of data	None
xx30 to xx45	15 minutes of data will be collected for the quarter-hour xx45	None
xx45 to xx00	The xx45 interval will contain no data. The xx00 interval will contain 30 minutes of data	None

Some quarter-hour measurements data may not be available for 24 hours after making 15-minute collection operational. This condition exists for quarter-hour intervals for which 15-minute collection has not yet occurred. Data that was collected on a 30-minute basis is available for reporting for up to 24 hours after it is collected. Once the 15-minute collection option is enabled, this data remains available on a half-hour basis (*xx00* and *xx30*) but is not available on a quarter-hour basis *(xx15* and *xx45*). After the 15-minute collection option has been enabled for 24 hours, all 15-minute measurements data is available on a quarter-hour basis (*xx00*, *xx15*, *xx30*, and *xx45*).

In addition, full 30-minute data coverage will not be available until 24 hours after making 15-minute collection not operational. Reports for specific periods will always contain the amount of data collected for that period. If SEAS reporting is enabled, for 24 hours after 15-min measurements are made not operational, 30-minute demand SEAS reports for time periods prior to feature status change will only contain 15 minutes of data, and SEAS will not support reporting at the *xx15* and *xx45* times.

Also note that in the exception case of making 15-minute collection not operational, if the feature is made not operational in the first 15 minutes of a half-hour (*xx00-xx15* or *xx30-xx45*) and a demand report is requested in the second 15 minutes of a half-hour (*xx15-xx30* or *xx45-xx60*) for period=last (or period unspecified), the report given will be the last 15-minute interval (*xx00-xx15* or *xx30-xx45*), not the last collected 15-minute interval (*xx45-xx00* or *xx15-xx30*). Note that collection did not occur during this 15-minute period, and `Measurements data not current` will be issued. To get a report for the last collected 15-minute interval, *period=specific* has to issued with the command with the correct QH/HH value.

If the feature control status of 15-minute measurements is turned on and a report is requested for the active interval (*period=active*) prior to the next scheduled measurements collection (based on the current 15-minute measurements status), then the data will be correct but the starting time for the period shown in the report will be incorrect. As soon as the next scheduled collection occurs, then active reports will show the correct data and the correct starting time.

A similar limitation also exists for *period=last*. If the feature control status of 15-minute measurements is turned on and a report is requested for the last interval prior to the next scheduled measurements collection (based on the current 15-minute measurements status), then the start and end times for the period shown in the report will be incorrect. The data presented in the report will correspond to the start and end times. As soon as the next scheduled collection occurs, then *period=last* reports will show the correct start and end times and the corresponding data for that interval.

If collection has not occurred since changing the operation status, then *period=specific* needs to be issued to get the last period collected.

Report Parameters

Reports are available for the following entities:

- EIR - Equipment Identity Register
- LINK - Signaling link
- LNKSET - Linkset
- LNP - Local number portability
- LSDESTNI - Linkset destination network identifier
- LSORIGNI - Linkset originating network identifier
- MAPSCRN - Global Systems for Mobile Communications Mobile Application Part Screening Measurements
- NP - Intelligent network application part based number portability
- ORIGNI - Originating network identifier
- ORIGNINC - Originating network identifier for network cluster
- STP - All nodes
- TT - Translation type
- STPLAN - TCP-IP links

There are four accessible periods for which measurements may be reported:

- *Last* is used to access the previous collection interval.
- *Specific* is used to access a specific interval (one of the previous 48 half hour intervals).
- *Active* is used to access measurements for the current collection interval.
- *All* is used to access measurements for all collection intervals retained.

Reports

The tables that follow in this chapter define the parameters used in the measurement reports. Included in the tables are the event name, description and unit of measurement as described in Telcordia GR-82-CORE.

The Example Commands and the Example Outputs are separated according to the collection method used to collect and report measurements.

- OAM Indicates measurements are collected by the OAM and stored for retrieval on the TDMs.
- MP Indicates measurements are collected and stored by the Measurements Platform. Scheduled reports are automatically generated and transferred to the customer's FTP server via the FTP interface.

NOTE: The Status Event Name appearing in the Measurement Tables only appears when using the Measurements Platform. The Example Outputs and the Example Inputs are examples. Variations exist and are likely. Refer to the Commands Manual for complete (options, variables) information on command usage.

The Measurements Platform is required for systems with more than 700 links. In this case, the *chg-meas:collect=off* can be used to disable the output without affecting the actual collection. If OAM based scheduled reported are disabled via this mechanism, then the TRAF output group may be turned-off since there is no output directed to it.

STP System Totals (SYSTOT) Measurements

These measurements are used to monitor the overall performance of the STP.

Entity types: STP, Translation Type (TT), STPLAN

Accumulation interval: Every 30 minutes

Optional MP Accumulation Interval: Every 15 minutes

STP retention period: 24 hours

Reporting modes: Scheduled, On-Demand

Accessible collection periods: Last, Specific (MP)

enttype=stp

Example Commands:

OAM: *rept-meas:type=systot:enttype=stp*

MP *rept-ftp-meas:type=systot:enttype=stp*

Table 4-3. STP System Total STP Measurements

Event Name	Description	Unit
CRSYSAL	**Number of Critical System Alarms** - The total number of critical system alarms.	peg count
DTAMSULOST	**DTA MSUs Lost** - The total number of MSUs that were discarded because the original MSU was too large to be encapsulated.	peg count
DURINTFL	**Duration of Internal Node Failure** - Total time that messages could not be switched to outgoing link (apart from any link interface failure).	milli-seconds
GFGTMATCH	**G-Flex GTTs with Match** - The total number of G-Flex Global Title Translations successfully completed.	peg count
GFGTNOMCH	**G-Flex GTTs No Match** - The total number of G-Flex Global Title Translations completed that did not match an entry in the GSM database.	peg count
GFGTNOLKUP	**G-Flex GTTs No Look-up** - The total number of G-Flex Global Title Translations that could not be looked up in the GSM database because of some error.	peg count
GTTPERFD	**GTTs Performed** - The sum total of MSUs that successfully completed SCCP translation. This includes all GTT modes as well as translations on Global Title (digits), on CgPA PC and OPC (Point Codes), and on CgPA SSN (Subsystem).	peg count
GTTUN0NS	**GTTs Unable to Perform** - Diagnostic 0: No Translation for Address of Such Nature - The sum total of times that the specified type of translation in an MSU was not supported by the STP. **NOTE: This register contains the sum of the GTTUN0NS register in the systot-tt report and the CGGTTUN0NS register in the systot-cgtt report.**	peg count
GTTUN1NT	**GTTs Unable to Perform** - Diagnostic 1: No Translation for This Address - The sum total of times that SCCP could not find a translation in the translation table. This includes Global Title translations, Point Code translations, and Subsystem translations. **NOTE: This register contains the sum of the GTTUN1NT register in the systot-tt report and the CGGTTUN1NT register in the systot-cgtt report.**	peg count
IDPRMSERR	The total number of MSUs selected for IDPR service which could not be processed due to errors in encoding, decoding, or formatting.	peg count

Table 4-3. STP System Total STP Measurements (Continued)

Event Name	Description	Unit
IDPRMSFAIL	Total number of MSUs selected for IDPR service which fell through to GTT due to (1) no match on MSISDN in MNPDB, or (2) match on MSISDN but no association to RN or SP.	peg count
IDPRMSRCV	Total number of MSUs received and selected for IDPR service. This register includes counts for MSUs that resulted in both successful and unsuccessful MNPDB lookups.	peg count
IDPRMSSUCC	Number of MSUs selected for IDPR service for which the MNPDB lookup resulted in a match on MSISDN with association to an RN or SP.	peg count
MASYSAL	**Number of Major System Alarms** - The total number of major system alarms.	peg count
MISYSAL	**Number of Minor System Alarms** - The total of minor system alarms.	peg count
MSIDPNOMCH	Total number of IDP messages that did not fully meet the criteria of the IDP Screening for Prepaid feature. These messages are relayed to their destination by GTT.	peg count
MSIDPMATCH	Total number of IDP messages that did meet the criteria of the IDP Screening for Prepaid feature. Instead of sending the IDP message onward, a Continue message is sent to the originating MSC. The criteria involves matching the following TCAP fields with Eagle Common Screening Lists: 1. CgPA and CdPA are provisioned in the In-Network Subscriber List. **2.** The Teleservice and Service Key values are in the Service Key/Teleservice List.	peg count
MSINVDPC	**MSUs Rcvd – Invalid DPC** - Number of MSUs received and discarded because the DPC could not be found in the STP routing table.	peg count
MSINVLNK	**MSUs Discarded – Invalid Link** - Number of MSUs discarded because of an incorrect SLC. (The SLC refers to a nonexistent link or the same link.)	peg count
MSINVSIF	**MSUs Discarded – Invalid SIF** - Number of MSUs that have been received and discarded because of an invalid SIF.	peg count
MSINVSIO	**MSUs Rcvd – Invalid service indicator octet (SIO)** - Number of MSUs received and discarded because the service requested in the service indicator octet (SIO) was not supported by the STP.	peg count
MSINVSLC	**MSUs Discarded – Invalid SLC** - Number of MSUs discarded because of an invalid SLC code in the ECO/COO.	peg count

Table 4-3. STP System Total STP Measurements (Continued)

Event Name	Description	Unit
MSNACDPC	**MSUs Discarded – Inaccessible DPC -** The total number of MSUs discarded because of an inaccessible DPC.	peg count
MSSCCPDISC	MSUs Discarded - Translation found, but provisioned ACTION caused the MSU to be discarded.	peg count
MSSCCPFL	**MSUs Discarded – Routing Failure -** Number of MSUs discarded due to an SCCP routing failure.	peg count
MSUDSCRD	**MSUs Discarded – Gateway Screening** - The total number of MSUs that failed gateway screening and were discarded. See linkset report for individual peg counts.	peg count
MSULOST1	**MSUs Discarded – Level 2/Level 3 Queue Full** - Number of MSUs discarded because the level 2 to level 3 queue was full.	peg count
MSULOST2	**MSUs Discarded – Route On Hold Buffer Overflow** - Number of MSUs discarded because the routing buffer was in overflow.	peg count
MSULOST3	**MSUs Discarded – LS On Hold Buffer Overflow** - Number of MSUs discarded because the linkset-on-hold buffer was in overflow.	peg count
MSULOST4	**MSUs Discarded – Rcvd Queue Full** - Number of MSUs discarded because the receive queue was full.	peg count
MSULOST5	**MSUs Discarded – LIM Init** - Number of MSUs discarded while the LIM card was initializing.	peg count
NMSCCPMH	The current daily system-wide peak SCCP message handling load in transactions per second.	xact per second
OMSINVDPC	**MSUs Originated – Invalid DPC -** Number of MSUs with an invalid DPC.	peg count
ORIGMSUS	**Originated MSUs -** The total number of outgoing MSUs successfully passed to MTP level 2 for transmission, while carrying the STP point code in the OPC field.	peg count
ORMSUOCT	**Originate MSU Octets -** The total number of outgoing octets associated with MSUs carrying the STP point code in the OPC field. This includes octets added in MTP level 2 processing.	octets
OVSZMSG	**Oversized MTP 3 Messages** - Number of messages received by an HSL that exceeds 272 octets (level 3) and is discarded.	peg count
PKSCCPMH	The overall system-wide peak SCCP message handling load in transactions per second. Value is the highest recorded since it was last reset using the rept-stat-sccp:mode=peakreset command.	xact per second

Table 4-3. STP System Total STP Measurements (Continued)

Event Name	Description	Unit
STATUS	**Indication of Data Validity** - ***K*** indicates good data; ***I*** indicates incomplete interval; ***N*** indicates data not current.	status
THRSWMSU	**Through-Switched MSUs -** The total number of MSUs that did not carry the STP point code in the OPC or the DPC, and were successfully passed to MTP level 2 for transmission.	peg count
TRMDMSUS	**Terminated MSUs -** The total number of incoming MSUs carrying the STP point code in the DPC.	peg count
TRMSUOCT	**Terminated MSU Octets -** The total number of octets associated with incoming MSUs carrying the STP point code in the DPC. Includes octets removed in MTP level 2 processing.	octets
TSMSUOCT	**Through-Switched MSU Octets -** The total number of octets associated with MSUs that did not carry the STPs point code in the OPC or the DPC, and were successfully passed to MTP level 2 for transmission.	octets
XLXTELEI	**X-List Entry Not Created** - The total number of times that an x-list was not created because the Exception List Exclusion Indicator (ELEI) for the cluster is set to *yes*.	peg count
XLXTSPACE	**X-List Entry Not Created** - The total number of times an x-list entry was not created because there is no more space in the route/destination table.	peg count
MSUSCCPFLR	**MSU SCCP Failure** - Total MSUs discarded due to SCCP conversion failure.	peg count

OAM Example Output:

```
eagle10706 03-08-16 10:30:09 EST  EAGLE5 33.0.0
    TYPE OF REPORT: STP SYSTEM TOTAL MEASUREMENTS ON STP
    REPORT PERIOD: LAST
    REPORT INTERVAL:  03-08-16  10:00:00 THRU 10:29:59

    STP-SYSTOT MEASUREMENTS

    ORIGMSUS   =       425, TRMDMSUS   =       420, THRSWMSU   =    730980,
    ORMSUOCT   =      8490, TRMSUOCT   =      8400, TSMSUOCT   =  14619600,
    DURINTFL   =         0, DTAMSULOST =         0, MSINVDPC   =         5,
    MSINVSIO   =         0, OMSINVDPC  =         0, MSINVLNK   =         0,
    MSINVSIF   =         0, MSNACDPC   =         5, MSINVSLC   =         0,
    GTTPERFD   =         0, GTTUN0NS   =         0, GTTUN1NT   =         0,
    MSSCCPFL   =         0, MSULOST1   =         0, MSULOST2   =         0,
    MSULOST3   =         0, MSULOST4   =         0, MSULOST5   =         0,
    CRSYSAL    =         1, MASYSAL    =         2, MISYSAL    =         9,
    XLXTSPACE  =         0, XLXTELEI   =         0, MSUDSCRD   =         0,
    OVSZMSG    =         0, GFGTMATCH  =         0, GFGTNOMCH  =         0,
    GFGTNOLKUP =         0, MSUSCCPFLR =         0, NMSCCPMH   =      4567,
    PKSCCPMH   =     38495, MSSCCPDISC =        23, IDPRMSERR  =         2,
    IDPRMSFAIL =        12, IDPRMSRCV  =      8374, IDPRMSSUCC =      8360,
    MSIDPNOMCH =         0, MSIDPMATCH =         0
;
```

```
    eagle10706 03-08-16 10:30:10 EST  EAGLE5 33.0.0
    END OF HALF-HOURLY STP-SYSTOT MEASUREMENT REPORT
;
```

MP Example Output File Name: **`systot-stp_19990117_1530.csv`**

MP Example Output File Format:

```
"CLLI","SWREL","RPTDATE","RPTIME","TZ","RPTTYPE","RPTPD","IVALDATE",
"IVALSTART","IVALEND","NUMENTIDS"<cr><lf>
"tekelecstp","31.3.0-51.0.0",”2003-08-17","15:51:37","EST",
"STP SYSTEM TOTAL MEASUREMENTS ON
STP","LAST",”2003-08-17","15:00:00","15:30:00",1<cr><lf>
<cr><lf>
"STATUS","ORIGMSUS","TRMDMSUS","THRSWMSU","ORMSUOCT","TRMSUOCT","TSMSUOCT","DURINT
FL",
"DTAMSULOST","MSINVDPC","MSINVSIO","OMSINVDPC","MSINVLNK","MSINVSIF","MSNACDPC","M
SINVSLC",
"GTTPERFD","GTTUN0NS","GTTUN1NT","MSSCCPFL","MSULOST1","MSULOST2",
"MSULOST3","MSULOST4","MSULOST5","CRSYSAL","MASYSAL","MISYSAL","XLXTSPACE","XLXTEL
EI","MSUDSCRD",
"OVSZMSG","GFGTMATCH","GFGTNOMCH","GFGTNOLKUP",“MSUSCCPFLR”,”NMSCCPMH”,”PKSCCPMH”,
”MSUSCCPDISC”,"IDPRMSERR","IDPRMSFAIL","IDPRMSRCV","IDPRMSSUCC",”MSIDPNOMCH”,”MSID
PMATCH”<cr><lf>
"K",425,420,730980,8490,8400,14619600,0,0,5,0,0,0,0,5,0,0,0,0,0,0,0,0,0,0,0,0,0,
0,1,2,9,0,0,0,0,0,9658,82379,39,2,12,8374,8360<cr><lf>
```

Example typical file size:

System header	+ Report header	+ Report data		
250	+ 463	+ 272	=	985 bytes

enttype=tt

Example Commands:

OAM: *rept-meas:type=systot:enttype=tt*

MP *rept-ftp-meas:type=systot:enttype=tt*

Table 4-4. STP System Total Translation Type Measurements

Event Name	Description	Unit
AGTTPERFD	Advanced CdPA GTTs Performed - The total number of MSUs that successfully passed Advanced CdPA Global Title Translation (AGTT). This register appears in the SYSTOT-TT report ONLY.	peg count
GTTPERFD	**GTTs Performed -** The total number of MSUs that successfully completed global title translation (GTT). Also includes G-Port and INP MSUs that got a match in either the G-Port, INP or GTT DB.	peg count
GTTUN0NS	**GTTs Unable to Perform - Diagnostic 0: No Translation for Address of Such Nature -** Total number of times that the specified translation type in an MSU was not supported by the STP or the form of the GTT was incorrect for the given translation type. Also includes G-Port, INP and GTT MSUs that did not match on new selectors (GTI,NP,NAI) in addition to ones not matching on TT.	peg count
GTTUN1NT	**GTTs Unable to Perform - Diagnostic 1: No Translation for This Address -** Number of times that a match for the global title could not be found in the translation table. Also includes G-Port, INP MSUs that fell through to GTT, got a selector match, but still did not get a match on the GTA.	peg count
STATUS	**Indication of Data Validity - *K*** indicates good data; ***I*** indicates incomplete interval; ***N*** indicates data not current.	status

OAM Example Output:

```
> rept-meas:type=systot:enttype=tt:tt=xxx

Command Accepted - Processing

    eagle10706 05-08-11 14:29:40 EST Rel 34.0.0-0.0.0
    rept-meas:type=systot:enttype=tt:tt=xxx
    Command entered at terminal #5.
;

    eagle10706 05-08-11 14:29:40 EST Rel 34.0.0-0.0.0
    Measurements Report will be generated.
;

    eagle10706 05-08-11 14:29:40 EST Rel 34.0.0-0.0.0
    TYPE OF REPORT: STP SYSTEM TOTAL MEASUREMENTS ON TT
    REPORT PERIOD: LAST
    REPORT INTERVAL:  05-08-11,  13:30:00 THROUGH 13:59:59

    TT-SYSTOT MEASUREMENTS
```

```
    TT-SYSTOT MEASUREMENTS: xxx

    These measurements are from 05-08-11, 13:30:00 through 13:59:59.
    GTTPERFD   =         0, GTTUN0NS   =         0, GTTUN1NT   =         0,
    AGTTPERFD  =         0

;

    eagle10706 05-08-11 14:29:41 EST Rel 34.0.0-0.0.0
    END OF ON-DEMAND TT-SYSTOT MEASUREMENT REPORT
;
```

MP Example Output File Name: **`systot-tt_19990117_1530.csv`**

MP Example Output File Format:

```
"CLLI","SWREL","RPTDATE","RPTIME","TZ","RPTTYPE","RPTPD","IVALDATE",
"IVALSTART","IVALEND","NUMENTIDS"<cr><lf>
"tekelecstp","34.0.0-55.1.0",”2005-01-17","15:51:37","EST",
"STP SYSTEM TOTAL MEASUREMENTS ON CDPA
TT","LAST",”2005-01-17","15:00:00","15:30:00",256<cr><lf>
<cr><lf>
"STATUS","TT","GTTPERFD","GTTUN0NS","GTTUN1NT","AGTTPERFD"<cr><lf>
"K",xxx,0,0,0,0<cr><lf>

. . . . .

"K",yyy,0,0,0,0<cr><lf>
```

Assuming each data line will be:

4 char status + 4 char TT + 4*(6 char data) + 2 = 34 chars

For a report of 256 TTs, typical file size is:

System header	+	Report header	+	Report data	=	
250	+	60	+	8704	=	9014 bytes

enttype=cgtt

Example Commands:

OAM: *rept-meas:type=systot:enttype=cgtt*

MP *rept-ftp-meas:type=systot:enttype=cgtt*

Table 4-5. Calling Party GTT Measurements

Event Name	Description	Unit
CGGTTPERFD	CgPA GTTs Performed - The total number of MSUs that successfully passed CgPA global title translation (GTT)(CgPA GTA, CgPA PC, or OPC). This register is pegged only when the CgPA TT is present in the MSU. Since GTT can be done on the CgPA PC or on the OPC, the CgPA GTA is not a pre-requisite to perform GTT. This register appears in the SYSTOT-CGTT report ONLY, which is only generated if the Origin Based SCCP Routing feature is enabled and turned on.	peg count
CGGTTUN0NS	CgPA GTTs Unable to Perform - Diagnostic 0: CgPA selectors not found - The total number of times that the specified type of translation in an MSU was not supported by the STP. This register counts MSUs for which CgPA selectors were not found. This register appears in the SYSTOT-CGTT report ONLY, which is only generated if the Origin Based SCCP Routing feature is enabled and turned on.	peg count
CGGTTUN1NT	Origin Based GTTs Unable to Perform - Diagnostic 1: - The number of times that a match for the global title or point code could not be found in the translation table because: Translation not found in CgPA GTA GTTSET or in CgPA PC GTTSET or in OPC GTTSET. GTT on CgPA PC is required, but CgPA PC is not present in the MSU. Default CgPA PC set in SCCPOPTS table is required but is not provisioned. This register appears in the SYSTOT-CGTT report ONLY, which is only generated if the Origin Based SCCP Routing feature is enabled and turned on.	peg count
STATUS	Indication of data validity - "K" indicates good data; "I" indicates incomplete interval; "N" indicates data not current.	Status

OAM Example Output:

```
eagle10706 05-08-11 14:29:42 EST Rel 35.0.0-0.0.0
TYPE OF REPORT: STP SYSTEM TOTAL MEASUREMENTS ON CGTT
REPORT PERIOD: LAST
REPORT INTERVAL:  05-08-11,  13:30:00 THROUGH 13:59:59

CGTT-SYSTOT MEASUREMENTS
```

```
CGTT-SYSTOT MEASUREMENTS: xxx

These measurements are from 05-08-11, 13:30:00 through 13:59:59.
CGGTTPERFD   =       0, CGGTTUN0NS   =       0, CGGTTUN1NT   =       0

;

eagle10706 05-08-11 14:29:42 EST Rel 34.0.0-0.0.0
END OF ON-DEMAND CGTT-SYSTOT MEASUREMENT REPORT
;
eagle10706 05-08-11 14:29:41 EST Rel 34.0.0-0.0.0
END OF ON-DEMAND TT-SYSTOT MEASUREMENT REPORT
;
```

MP Example Output File Name: **`systot-cgtt_20050117_1530.csv`**

MP Example Output File Format:

```
"CLLI","SWREL","RPTDATE","RPTIME","TZ","RPTTYPE","RPTPD","IVALDATE",
"IVALSTART","IVALEND","NUMENTIDS"<cr><lf>
"tekelecstp","34.0.0-55.1.0",”2005-01-17","15:51:37","EST",
"STP SYSTEM TOTAL MEASUREMENTS ON CGPA
TT","LAST",”2005-01-17","15:00:00","15:30:00",256<cr><lf>
<cr><lf>
"STATUS","TT","CGGTTPERFD","CGGTTUN0NS","CGGTTUN1NT"<cr><lf>
"K",xxx,0,0,0<cr><lf>

. . . . .

"K",yyy,0,0,0<cr><lf>
```

Assuming each data line will be:

4 char status + 4 char TT + 3*(6 char data) + 2 = 28 chars

For a report of 256 TTs, typical file size is:

System header	+	Report header	+	Report data		
250	+	55	+	7168	=	7473 bytes

enttype=stplan

NOTE: The peg counts for STPLAN measurements have the possibility of rolling over during periods of high STPLAN message transmit and receive. On the measurement reports these measurements show up as negative numbers. This indicates STPLAN transmit and receive measurements have values greater than four gigabytes of data.

Example Commands:

OAM: *rept-meas:type=systot:enttype=stplan*

MP *rept-ftp-meas:type=systot:enttype=stplan*

Table 4-6. STP System Total STPLAN Measurements

Event Name	Description	Unit
ENETALNERR	**Ethernet Alignment Error** - Number of packets not received over the STPLAN interface because of ethernet alignment errors.	peg count
ENETBUSBSY	**Ethernet Bus Busy -** Number of transmissions attempted when the STPLAN ethernet bus was busy.	peg count
ENETCOLERR	**Ethernet Collision Error -** Number of packets not transmitted by STPLAN because of excessive collisions on the STPLAN ethernet bus.	peg count
ENETCRCERR	**Ethernet CRC Error** - Number of packets not received on the STPLAN ethernet due to CRC errors.	peg count
ENETOCTRCV	**Ethernet Octets Received** - The total number of octets received on the STPLAN ethernet interface.	peg count
ENETOCTXMT	**Ethernet Octets Transmitted** - The total number of octets transmitted on the STPLAN ethernet interface.	peg count
ENETOVRERR	**Ethernet Receive Buffer Overflow Errors** - Number of packets not received by STPLAN because of a receive buffer overflow.	peg count
IPADDRERR	**IP Address Error**- The total number of inbound IP datagrams discarded on the STPLAN interface due to a bad destination address.	peg count
IPHDRERR	**IP Header Errors** - The total number of inbound IP datagrams discarded on the STPLAN interface due to header errors.	peg count
IPPROTERR	**IP Protocol Error** - Number of inbound IP datagrams discarded by STPLAN due to an error in the packet (invalid protocol).	peg count
SLANDISC1	**STPLAN Discarded 1** - Number of indicated messages not copied to the host due to the STPLAN feature being disabled.	peg count
SLANDISC2	**STPLAN Discarded 2** - Number of MSUs discarded due to the host being unreachable.	peg count
SLANDSBLD	**STPLAN Disabled** - The duration that the STPLAN screening/copy feature was disabled.	msecs

Table 4-6. STP System Total STPLAN Measurements (Continued)

Event Name	Description	Unit
SLANSCRND	**STPLAN Screened** - Number of MSUs that were copied to the STPLAN interface after passing gateway screening.	peg count
SLANXMIT	**STPLAN Transmit** - Number of MSUs sent to the host destination.	peg count
STATUS	**Indication of Data Validity** - ***K*** indicates good data; ***I*** indicates incomplete interval; ***N*** indicates data not current.	status
TCPCONNFLD	**TCP Connections Failed -** The total number of TCP connections that have failed on the STPLAN interface.	peg count
TCPRCVERR	**TCP Receive Error** - The total number of TCP segments received on the STPLAN interface in error.	peg count
TCPRSTSENT	**TCP Reset Sent** - The total number of TCP segments sent containing the reset (RST) flag on the STPLAN interface.	peg count
TCPSEGRCVD	**TCP Segment Received -** The total number of TCP segments received on the STPLAN interface.	peg count
TCPSEGSENT	**TCP Segment Sent -** The total number of TCP segments sent on the STPLAN interface.	peg count
TCPSEGXMT2	**TCP Segment Retransmitted -** The total number of TCP segments retransmitted on the STPLAN interface.	peg count

OAM Example Output:

```
    tekelecstp 01-08-23 11:00:11 EST EAGLE 34.0.0
    TYPE OF REPORT: STP SYSTEM TOTAL MEASUREMENTS ON STPLAN
    REPORT PERIOD: LAST
    REPORT INTERVAL:  01-08-23  10:30:00 THRU 10:59:59
    STPLAN-SYSTOT MEASUREMENTS

    Measurement data represents an incomplete interval.
    SLANDSBLD  =         0, SLANDISC1  =         0, SLANDISC2  =         0,
    SLANSCRND  =         0, SLANXMIT   =         0, ENETALNERR =         0,
    ENETCRCERR =         0, ENETCOLERR =         0, ENETBUSBSY =         0,
    ENETOVRERR =         0, ENETOCTXMT =         0, ENETOCTRCV =         0,
    TCPCONNFLD =         0, TCPSEGRCVD =         0, TCPSEGSENT =         0,
    TCPSEGXMT2 =         0, TCPRCVERR  =         0, TCPRSTSENT =         0,
    IPHDRERR   =         0, IPADDRERR  =         0, IPPROTERR  =         0

;

    tekelecstp 01-08-23 11:00:12 EST EAGLE 34.0.0
    END OF HALF-HOURLY STPLAN-SYSTOT MEASUREMENT REPORT
;
```

MP Example Output File Name: **`systot-stplan_19990117_1530.csv`**

MP Example Output File Format:

```
"CLLI","SWREL","RPTDATE","RPTIME","TZ","RPTTYPE","RPTPD","IVALDATE",
"IVALSTART","IVALEND","NUMENTIDS"<cr><lf>
```

```
"tekelecstp","34.0.0-39.1.0","1999-01-17","15:51:37","EST",
"STP SYSTEM TOTAL MEASUREMENTS ON STPLAN","LAST","1999-01-17","15:00:00","15:30:00",1<cr><lf>
<cr><lf>
"STATUS","SLANDSBLD","SLANDISC1","SLANDISC2","SLANSCRND","SLANXMIT","ENETALNERR","
ENETCRCERR",
"ENETCOLERR","ENETBUSBSY","ENETOVRERR","ENETOCTXMT","ENETOCTRCV","TCPCONNFLD","TCP
SEGRCVD",
"TCPSEGSENT","TCPSEGXMT2","TCPRCVERR","TCPRSTSENT","IPHDRERR","IPADDRERR","IPPROTE
RR"<cr><lf>
"K",0,0,0,0,0,0,0,0,0,0,0,0,0,0,0,0,0,0,0,0,0<cr><lf>
```

Example typical file size:

System header + Report header + Report data

250 + 275 + 132 = 657 bytes

Component Measurements

Component Measurements provides performance data related to links and linksets.

Entity Types: Link, Lnkset

Accumulation Interval: 30 minutes

Optional MP Accumulation Interval: Every 15 minutes

STP Retention Period: 24 hours

Reporting Modes: Scheduled, On-Demand

Accessible Collection Periods: Last, Specific, Active (OAM)

enttype=lnkset

Certain registers are reported for HSLs or LSLs only. Other registers have different interpretations for HSLs than for LSLs. These registers are summarized in Table 4-7.

Table 4-7. HSL LSL Differences for Component Linksets

Event Name	LSL Usage	HSL Usage
MSURECVD	As described	Applies to MTP level 3 messages
MSUSRGTT	As described	Applies to MTP level 3 messages
MSUTRAN	MSUs transmitted and acknowledeged by level 2	MTP level 3 messages offered to SAAL level for transmission
OCTRCGTT	As described	Applies to MTP level 3 message bytes
OCTRECVD	As described	Applies to MTP level 3 message bytes
OCTTRAN	Octets associated with MSUs transmitted and acknowledged by level 2	Bytes/octets associated with MTP level 3 messages offered to the SAAL level for transmission
SDURECVD	Not reported	As described

Table 4-7. HSL LSL Differences for Component Linksets

Event Name	LSL Usage	HSL Usage
SDUSTRAN	Not reported	As described
SDURETRN	Not reported	As described
ATMNDCRCV	Not reported	As described
ATMNDCTRN	Not reported	As described

Example Commands:

OAM: *rept-meas:type=com*p:*enttype=lnkset:lsn=xy212*

MP: *rept-ftp-meas:type=com*p:*enttype=lnkset*

Table 4-8. Component Linkset Measurements

Event Name	Description	Unit
ATMNDCRCV	**Total incoming NDC** - Valid ATM cells on the HSL's VCL, including UI and OAM cells but excluding idle/unassigned cells.	peg count
ATMNDCTRN	**Total outgoing NDC** - Valid ATM cells on the HSL's VCL, including UI and OAM cells but excluding idle/unassigned cells.	peg count
MSGWSDSLIM	**MSUs lost due to Gateway Screening being Disabled on a LIM** - These MSUs were discarded because the gateway screening function was disabled. Gateway screening may have been disabled due to "load shedding" indicating high traffic volume in the system, or because the screenset was unavailable. This condition can also occur if the screenset data is invalid or *gateway screening disabled* is on.	peg count
MSURECVD	**MSUs Received** - Total number of MSUs received, including those for which retransmission has been requested.	peg count
MSUSRGTT	**MSUs Received Requiring GTT** - Total number of incoming MSUs requiring global title translation (GTT).	peg count
MSUTRAN	**MSUs Transmitted** - Total number of MSUs transmitted to the far-end, including retransmissions.	peg count
OCTRCGTT	**MSU Octets Received for MSUs Requiring GTT** - Total number of octets received associated with incoming MSUs requiring global title translation (GTT), including octets removed in MTP level 2 processing.	octets
OCTRECVD	**MSU Octets Received** - Total number of octets associated with MSUs received, including those removed for MTP level 2 processing and those for which retransmission has been requested.	octets
OCTTRAN	**MSU Octets Transmitted** - Total number of octets associated with MSUs transmitted to the far-end, including those added in MTP level 2 processing and retransmissions.	octets

Table 4-8. Component Linkset Measurements (Continued)

Event Name	Description	Unit
SDURECVD	**SSCOP SD PDUs Received** - The number of SSCOP sequenced data (SD) PDUs that were received during the indicated interval.	peg count
SDURETRN	**SSCOP SD PDUs Retransmitted** - The number of SSCOP SD PDUs that were retransmitted, based on an accumulated count of such retransmissions conveyed to layer management.	peg count
SDUSTRAN	**SSCOP SD PDUs Transmitted** - The number of SSCOP SD PDUs that were transmitted, including retransmissions.	peg count
STATUS	**Indication of Data Validity** - ***K*** indicates good data; ***I*** indicates incomplete interval; ***N*** indicates data not current.	status
TDLSINAC	**Total Duration of Link Set Inactivity** - The total time that all links in the linkset were unavailable to MTP level 3, regardless if they were made unavailable manually or automatically.	seconds
ZTTMAPI	**Translation Type Mapping Translation Performed** - MSUs Received on the Gateway Linkset - The total number of Translation Type Mapping translations performed for incoming Message Signal Units (MSUs) received on the specified linkset.	peg count
ZTTMAPO	**Translation Type Mapping Translation Performed** - MSUs Transmitted on the Gateway Linkset - The total number of translations performed on outgoing Message Signal Units (MSUs) for the specified linkset.	peg count
MTPMSCNVTD	Total MTP Routed SCCP MSUs Converted.	peg count
GTTMSCNVTD	Total GT Routed SCCP MSUs Converted	peg count

OAM Example Output:

```
    eagle10706 03-08-16 10:30:11 EST  EAGLE5 34.0.0
    TYPE OF REPORT: COMPONENT MEASUREMENTS ON LNKSET
    REPORT PERIOD: LAST
    REPORT INTERVAL:  03-08-16  10:00:00 THRU 10:29:59

    LNKSET-COMP MEASUREMENTS: lsn1    (SAAL)

    MSUTRAN    =    120755, MSURECVD   =    147190, OCTTRAN    =   2415100,
    OCTRECVD   =   2943800, MSUSRGTT   =         0, OCTRCGTT   =         0,
    TDLSINAC   =         0, MSGWSDSLIM =         0, ZTTMAPO    =         0,
    ZTTMAPI    =         0, ATMNDCTRN  =         0, ATMNDCRCV  =         0,
    SDUSTRAN   =         0, SDURECVD   =         0, SDURETRN   =         0,
    MTPMSCNVTD =         0, GTTMSCNVTD =         0

;

    eagle10706 03-08-16 10:30:12 EST  EAGLE5 34.0.0
    LNKSET-COMP MEASUREMENTS: lsn2
```

```
    MSUTRAN    =    120740, MSURECVD   =    147196, OCTTRAN    =   2414790,
    OCTRECVD   =   2943920, MSUSRGTT   =         0, OCTRCGTT   =         0,
    TDLSINAC   =         0, MSGWSDSLIM =         0, ZTTMAPO    =         0,
    ZTTMAPI    =         0, MTPMSCNVTD =         0, GTTMSCNVTD =         0

;

    eagle10706 03-08-16 10:30:13 EST  EAGLE5 34.0.0
    LNKSET-COMP MEASUREMENTS: lsn3

    MSUTRAN    =    144895, MSURECVD   =    147190, OCTTRAN    =   2897900,
    OCTRECVD   =   2943800, MSUSRGTT   =         0, OCTRCGTT   =         0,
    TDLSINAC   =         0, MSGWSDSLIM =         0, ZTTMAPO    =         0,
    ZTTMAPI    =         0, MTPMSCNVTD =         0, GTTMSCNVTD =         0

;

    eagle10706 03-08-16 10:30:14 EST  EAGLE5 34.0.0
    LNKSET-COMP MEASUREMENTS: lsn4    (SAAL)

    MSUTRAN    =         0, MSURECVD   =         0, OCTTRAN    =         0,
    OCTRECVD   =         0, MSUSRGTT   =         0, OCTRCGTT   =         0,
    TDLSINAC   =         0, MSGWSDSLIM =         0, ZTTMAPO    =         0,
    ZTTMAPI    =         0, ATMNDCTRN  =         0, ATMNDCRCV  =         0,
    SDUSTRAN   =         0, SDURECVD   =         0, SDURETRN   =         0,
    MTPMSCNVTD =         0, GTTMSCNVTD =         0

;

    eagle10706 03-08-16 10:30:14 EST EAGLE 34.0.0
    END OF HALF-HOURLY LNKSET-COMP MEASUREMENT REPORT
;
```

MP Example Output File Name: **`comp-lnkset_19990117_1530.csv`**

```
"CLLI","SWREL","RPTDATE","RPTIME","TZ","RPTTYPE","RPTPD","IVALDATE",
"IVALSTART","IVALEND","NUMENTIDS"<cr><lf>
"tekelecstp","34.0.0-51.0.0","2003-08-17","15:51:37","EST",
"COMPONENT MEASUREMENTS ON
LNKSET","LAST","2003-08-17","15:00:00","15:30:00",100<cr><lf>
<cr><lf>
"STATUS","LSN","LNKTYPE","MSUTRAN","MSURECVD","OCTTRAN","OCTRECVD","MSUSRGTT",
"OCTRCGTT","TDLSINAC","MSGWSDSLIM","ZTTMAPO","ZTTMAPI","ATMNDCTRN","ATMNDCRCV",
"SDUSTRAN","SDURECVD","SDURETRN","MTPMSCNVTD","GTTMSCNVTD"<cr><lf>
"K","lsn001","SAAL",120755,147190,2415100,2943800,0,0,0,0,0,0,0,0,0,0,0,0<cr><lf
>
"K","lsn002","MTP2",120740,147196,2414790,2943920,0,0,0,0,0,0,,,,,,0,0<cr><lf>
"K","lsn003","MTP2",144895,147190,2897900,2943800,0,0,0,0,0,0,,,,,,0,0<cr><lf>
"K","lsn004","SAAL",0,0,0,0,0,0,0,0,0,0,0,0,0,0,0,0,0<cr><lf>
. . . . .

"K","lsnxxx","MTP2",144895,147190,2897900,2943800,0,0,0,0,0,0,,,,,,0,0<cr><lf>
```

Assuming each data line will be:

4 char status + 8 char LSN + 7 char LKNTYPE + 17*(6 char data) + 2 = 123 chars

For a report of 500 linksets, typical file size is:

System header + Report header + Report data

250 + 220 + 61500 = 61970 bytes

enttype=link

Certain registers are reported for HSLs or LSLs only. Other registers have different interpretations for HSLs than for LSLs. These registers are summarized in Table 4-9.

Table 4-9. HSL LSL Differences for Component Links

Event Name	LSL Usage	HSL Usage
MSUDISC0	As described	Applies to MTP level 3 messages
MSUDISC1	As described	Applies to MTP level 3 messages
MSUDISC2	As described	Applies to MTP level 3 messages
MSUDISC3	As described	Applies to MTP level 3 messages
MSURECVD	As described	Applies to MTP level 3 messages
MSURETRN	MSUs retransmitted by level 2	not reported for HSLs, see SDURETRN
MSUSRGTT	As described	Applies to MTP level 3 messages
MSUTRAN	MSUs transmitted and acknowledeged by level 2	MTP level 3 messages offered to SAAL level for transmission
OCTRCGTT	As described	Applies to MTP level 3 message bytes
OCTRECVD	As described	Applies to MTP level 3 message bytes
OCTTRAN	Octets associated with MSUs transmitted and acknowledged by level 2	Bytes/octets associated with MTP level 3 messages offered to the SAAL level for transmission
SDURECVD	Not reported	As described
SDUSTRAN	Not reported	As described
SDURETRN	Not reported	As described
ATMNDCRCV	Not reported	As described
ATMNDCTRN	Not reported	As described

Example Commands:

OAM: *rept-meas:type=comp:enttype=link:loc=xxxx:link=x*

MP: *rept-ftp-meas:type=comp:enttype=link*

Table 4-10. Component Link Measurements

Event Name	Description	Unit
ATMNDCRCV	**Total incoming NDC** - Valid ATM cells on the HSL's VCL, including UI and OAM cells but excluding idle/unassigned cells.	peg count

Table 4-10. Component Link Measurements (Continued)

Event Name	Description	Unit
ATMNDCTRN	**Total outgoing NDC** - Valid ATM cells on the HSL's VCL, including UI and OAM cells but excluding idle/unassigned cells.	peg count
DURLKOTG	**Duration of Link Outage** - The total time a link was unavailable to MTP level 3 for any reason.	seconds
ECCNGLV1	**Event Count for Entering Level 1 Link Congestion** - The total number of times that link congestion level 1 was entered.	peg count
ECCNGLV2	**Event Count for Entering Level 2 Link Congestion** - The total number of times that link congestion level 2 was entered.	peg count
ECCNGLV3	**Event Count for Entering Level 3 Link Congestion** - The total number of times that link congestion level 3 was entered.	peg count
LNKAVALT	**Link Available Time** - The total time the link was available to MTP level 3.	seconds
MSUDISC0	**Priority 0 MSUs Discarded Due to Congestion** - The total number of priority 0 MSUs discarded due to congestion (any level).	peg count
MSUDISC1	**Priority 1 MSUs Discarded Due to Congestion** - The total number of priority 1 MSUs discarded due to congestion (any level).	peg count
MSUDISC2	**Priority 2 MSUs Discarded Due to Congestion** - The total number of priority 2 MSUs discarded due to congestion (any level).	peg count
MSUDISC3	**Priority 3 MSUs Discarded Due to Congestion** - The total number of priority 3 MSUs discarded due to congestion (any level).	peg count
MSURECVD	**MSUs Received** - Total number of MSUs received, including those for which retransmission has been requested.	peg count
MSURETRN	**MSUs Retransmitted** - Number of MSUs retransmitted from the STP on this link.	peg count
MSUSRGTT	**MSUs Received Requiring GTT** - Total number of incoming MSUs requiring global title translation (GTT).	peg count
MSUTRAN	**MSUs Transmitted** - Total number of MSUs transmitted to the far-end, including retransmissions.	peg count
MTCEUSG	**Link Maintenance Usage** - The total time the link was manually made unavailable to MTP level 3.	seconds
NMGWSDSABL	**Number of Times GWS Disabled** - Number of times that gateway screening was disabled because of a processor overload.	peg count

Table 4-10. Component Link Measurements (Continued)

Event Name	Description	Unit
OCTRCGTT	**MSU Octets Received for MSUs Requiring GTT** - Total number of octets received associated with incoming MSUs requiring global title translation (GTT), including octets removed in MTP level 2 processing.	octets
OCTRECVD	**MSU Octets Received** - Total number of octets associated with MSUs received, including those removed for MTP level 2 processing and those for which retransmission has been requested.	octets
OCTRETRN	**MSU Octets Retransmitted** - The total number of MSU octets retransmitted. This register is NOT reported for HSLs.	octets
OCTTRAN	**MSU Octets Transmitted** - Total number of octets associated with MSUs transmitted to the far-end, including those added in MTP level 2 processing and retransmissions.	octets
SDURECVD	**SSCOP SD PDUs Received** - The number of SSCOP sequenced data (SD) PDUs that were received during the indicated interval.	peg count
SDURETRN	**SSCOP SD PDUs Retransmitted** - The number of SSCOP SD PDUs that were retransmitted, based on an accumulated count of such retransmissions conveyed to layer management.	peg count
SDUSTRAN	**SSCOP SD PDUs Transmitted** - The number of SSCOP SD PDUs that were transmitted, including retransmissions.	peg count
STATUS	**Indication of Data Validity** - ***K*** indicates good data; ***I*** indicates incomplete interval; ***N*** indicates data not current.	status
TDCNGLV1	**Total Duration of Level 1 Link Congestion** - The total time the link was in level 1 congestion.	seconds
TDCNGLV2	**Total Duration of Level 2 Link Congestion** - The total time the link was in level 2 congestion.	seconds
TDCNGLV3	**Total Duration of Level 3 Link Congestion** - The total time the link was in level 3 congestion.	seconds

OAM Example Output:

```
stdcfg2b 04-03-28 01:00:05 EST EAGLE 34.0.0-53.26.0
TYPE OF REPORT: COMPONENT MEASUREMENTS ON LINK
REPORT PERIOD: LAST
REPORT INTERVAL:  04-03-28  00:30:00 THRU 00:59:59

LINK-COMP MEASUREMENTS: LOC: 1201, PORT: A  , LSN: e2m1s1

These measurements are from 04-03-28, 00:30:00 through 00:59:59.
MSUTRAN    =        20, MSURECVD   =        20, MSURETRN   =         0,
OCTRETRN   =         0, OCTTRAN    =       400, OCTRECVD   =       400,
MTCEUSG    =         0, DURLKOTG   =         0, MSUSRGTT   =         0,
```

```
    OCTRCGTT   =         0, TDCNGLV1   =         0, TDCNGLV2   =         0,
    TDCNGLV3   =         0, ECCNGLV1   =         0, ECCNGLV2   =         0,
    ECCNGLV3   =         0, MSUDISC0   =         0, MSUDISC1   =         0,
    MSUDISC2   =         0, MSUDISC3   =         0, LNKAVAIL   =       183,
    NMGWSDSABL =         0

;

    stdcfg2b 04-03-28 01:00:05 EST EAGLE 34.0.0-53.26.0
    LINK-COMP MEASUREMENTS: LOC: 1201, PORT: B  , LSN: e2m1s2

    These measurements are from 04-03-28, 00:30:00 through 00:59:59.
    MSUTRAN    =        20, MSURECVD   =        20, MSURETRN   =         0,
    OCTRETRN   =         0, OCTTRAN    =       400, OCTRECVD   =       400,
    MTCEUSG    =         0, DURLKOTG   =         0, MSUSRGTT   =         0,
    OCTRCGTT   =         0, TDCNGLV1   =         0, TDCNGLV2   =         0,
    TDCNGLV3   =         0, ECCNGLV1   =         0, ECCNGLV2   =         0,
    ECCNGLV3   =         0, MSUDISC0   =         0, MSUDISC1   =         0,
    MSUDISC2   =         0, MSUDISC3   =         0, LNKAVAIL   =       183,
    NMGWSDSABL =         0

;

    stdcfg2b 04-03-28 01:00:05 EST EAGLE 34.0.0-53.26.0
    LINK-COMP MEASUREMENTS: LOC: 1202, PORT: B  , LSN: e2m1s3  (SAAL)

These measurements are from 04-03-28, 00:30:00 through 00:59:59.
    MSUTRAN    =         5, MSURECVD   =         1, OCTTRAN    =        89,
    OCTRECVD   =        17, MTCEUSG    =         0, DURLKOTG   =       117,
    MSUSRGTT   =         0, OCTRCGTT   =         0, TDCNGLV1   =         0,
    TDCNGLV2   =         0, TDCNGLV3   =         0, ECCNGLV1   =         0,
    ECCNGLV2   =         0, ECCNGLV3   =         0, MSUDISC0   =         0,
    MSUDISC1   =         0, MSUDISC2   =         0, MSUDISC3   =         0,
    LNKAVAIL   =      1684, NMGWSDSABL =         0, ATMNDCTRN  =     16845,
    ATMNDCRCV  =     16841, SDUSTRAN   =     16845, SDURECVD   =     16841,
    SDURETRN   =         0

;

    stdcfg2b 04-03-28 01:00:06 EST EAGLE 34.0.0-53.26.0
    END OF HALF-HOURLY LINK-COMP MEASUREMENT REPORT
;
```

MP Example Output File Name: **comp-link_20040117_1530.csv**

MP Example Output File Format:

```
"CLLI","SWREL","RPTDATE","RPTIME","TZ","RPTTYPE","RPTPD","IVALDATE",
"IVALSTART","IVALEND","NUMENTIDS"<cr><lf>
"tekelecstp","34.0.0-53.26.0","2004-01-17","15:51:37","EST",
"COMPONENT MEASUREMENTS ON
LINK","LAST","2004-01-17","15:00:00","15:15:00",500<cr><lf>
<cr><lf>
"STATUS","LSN","LOC","LINK","LNKTYPE","MSUTRAN","MSURECVD","MSURETRN","OCTRETRN","
OCTTRAN","OCTRECVD",
"MTCEUSG","DURLKOTG","MSUSRGTT","OCTRCGTT","TDCNGLV1","TDCNGLV2","TDCNGLV3","ECCNG
LV1",
```

```
"ECCNGLV2","ECCNGLV3","MSUDISC0","MSUDISC1","MSUDISC2","MSUDISC3","LNKAVAIL",
"NMGWSDSABL","ATMNDCTRN","ATMNDCRCV","SDUSTRAN","SDURECVD","SDURETRN"<cr><lf>
"K","lsn004","1201","B","MTP2",0,0,0,0,0,0,0,0,0,0,0,0,0,0,0,0,0,0,0,0,1800,0,,,,,
<cr><lf>
"K","lsn030","1202","B","MTP2",0,0,0,0,0,0,0,0,0,0,0,0,0,0,0,0,0,0,0,0,1800,0,,,,,
<cr><lf>
"K","lsn122","1203","A","SAAL",5,1,,89,,17,0,117,0,0,0,0,0,0,0,0,0,0,0,1684,0,16
845,16841,
16845,16841,0<cr><lf>
. . . . .

"K","lsnxxx","5314","B1","MTP2",0,0,0,0,0,0,0,0,0,0,0,0,0,0,0,0,0,0,0,0,1800,0,,,,
,<cr><lf
```

Assuming each data line will be:

4 char status + 9 char LSN + 6 char LOC + 4 char LINK +
7 char LKNTYPE + 27*(6 char data) + 2 = 194 chars

For a report of 500 linksets, the typical file size is:

System header	+	Report header	+	Report data		
250	+	339	+	97000	=	97589 bytes

Network Management Measurements

Network Management Reports provide measurement data on STP traffic, Global Title Translations, and MTP Network Management.

Entity Types: STP, Lnkset, and Link

Accumulation Interval: 5 minutes

STP Retention Period: 5 minutes

Reporting Mode: Scheduled, On-demand, SEAS autonomous

Accessible Collection Period: Last (STP, Lnkset, and Link), Active [OAM (Lnkset and Link)]

enttype=stp

Example Commands:

OAM: *rept-meas:type=nm:enttype=stp*

MP: *rept-ftp-meas:type=nm:enttype=stp*

Table 4-11. Network Management STP Measurements

Event Name	Description	Unit
GTTPERFD	**GTTs Performed** - The total number of MSUs that successfully completed global title translation (GTT).	peg count
GTTUN0NS	**GTTs Unable to Perform - Diagnostic 0: No Translation for Address of Such Nature –** Total number of times that the specified translation type in an MSU was not supported by the STP or the form of the GTT was incorrect for the given translation type.	peg count
GTTUN1NT	**GTTs Unable to Perform - Diagnostic 1: No Translation for This Address –** Number of times that a match for the global title could not be found in the translation table.	peg count
MSINVSIF	**MSUs Discarded – Invalid SIF** - Number of MSUs that have been received and discarded because of an invalid SIF.	peg count
MSINVDPC	**MSUs Rcvd – Invalid DPC -** Number of MSUs received and discarded because the DPC could not be found in the STP routing table.	peg count
MSINVLNK	**MSUs Discarded – Invalid Link** - Number of MSUs discarded because of an incorrect SLC. (The SLC refers to a nonexistent link or the same link.)	peg count
MSINVSIO	**MSUs Rcvd – Invalid Service Indicator Octet (SIO)** - Number of MSUs received and discarded because the service requested in the service indicator octet (SIO) was not supported by the STP.	peg count
MSINVSLC	**MSUs Discarded – Invalid SLC -** Number of MSUs discarded because of an invalid SLC code in the ECO/COO.	peg count
MSNACDPC	**MSUs Discarded – Inaccessible DPC -** The total number of MSUs discarded because of an inaccessible DPC.	peg count
MSSCCPFL	**MSUs Discarded – Routing Failure -** Number of MSUs discarded due to a routing failure.	peg count
MSUDSCRD	**MSUs Discarded – Gateway Screening** - The total number of MSUs that failed gateway screening and have been discarded.	peg count
MSULOST1	**MSUs Discarded – Level 2/Level 3 Queue Full** - Number of MSUs discarded because the level 2 to level 3 queue was full.	peg count
MSULOST2	**MSUs Discarded – Route On Hold Buffer Overflow** - Number of MSUs discarded because the routing buffer was in overflow.	peg count
MSULOST3	**MSUs Discarded – LS On Hold Buffer Overflow** - Number of MSUs discarded because the linkset-on-hold buffer was in overflow.	peg count

Table 4-11. Network Management STP Measurements (Continued)

Event Name	Description	Unit
MSULOST4	**MSUs Discarded – Rcv Queue Full** - Number of MSUs discarded because the receive queue was full.	peg count
NMTSKDSC0	**Network Management Task Discard from Processor Overload** - The total number of network management tasks (messages) discarded because of a processor overload (task priority = 0).	peg count
NMTSKDSC1	**Network Management Task Discard from Processor Overload** - The total number of network management tasks (messages) discarded because of a processor overload (task priority = 1).	peg count
NMTSKDSC2	**Network Management Task Discard from Processor Overload** - The total number of network management tasks (messages) discarded because of a processor overload (task priority = 2).	peg count
NMTSKDSC3	**Network Management Task Discard from Processor Overload** - The total number of network management tasks (messages) discarded because of a processor overload (task priority = 3).	peg count
OMSINVDPC	**MSUs Originated – Invalid DPC** - Number of MSUs originated with an invalid DPC.	peg count
ORIGMSUS	**Originated MSUs** - The total number of outgoing MSUs successfully passed to MTP level 2 for transmission, while carrying the STP point code in the OPC field.	peg count
ORMSUOCT	**Originate MSU Octets** - The total number of outgoing octets associated with MSUs carrying the STP point code in the OPC field. This includes octets added in MTP level 2 processing.	octets
OVSZMSG	**Oversized MTP 3 Messages** - Oversized MTP 3 messages exceeding 272 octets (level 3) that are received by an HSL and are discarded.	peg count
STATUS	**Indication of Data Validity** - ***K*** indicates good data; ***I*** indicates incomplete interval; ***N*** indicates data not current.	status
THRSWMSU	**Through-Switched MSUs** - The total number of MSUs that did not carry the STP point code in the OPC or the DPC, and were successfully passed to MTP level 2 for transmission.	peg count
TRMDMSUS	**Terminated MSUs** - The total number of incoming MSUs carrying the STP point code in the DPC.	peg count
TRMSUOCT	**Terminated MSU Octets** - The total number of octets associated with incoming MSUs carrying the STP point code in the DPC. Includes octets removed in MTP level 2 processing.	octets
TSMSUOCT	**Through-Switched MSU Octets** - The total number of octets associated with MSUs that did not carry the STP point code in the OPC or the DPC, and were successfully passed to MTP level 2 for transmission	octets

OAM Example Output:

```
    eagle10506 03-04-15 17:13:02 EST EAGLE 34.0.0
    TYPE OF REPORT: NETWORK MANAGEMENT MEASUREMENTS ON STP
    REPORT PERIOD: LAST
    REPORT INTERVAL:  03-04-15,  17:05:00 THROUGH 17:09:59

    STP-NM MEASUREMENTS

    These measurements are from 03-04-15, 17:05:00 through 17:09:59.
    ORIGMSUS   =        80, TRMDMSUS   =        80, THRSWMSU   =         0,
    ORMSUOCT   =      1540, TRMSUOCT   =      1540, TSMSUOCT   =         0,
    MSINVDPC   =         0, MSINVSIO   =         0, OMSINVDPC  =         0,
    MSINVLNK   =         0, GTTPERFD   =         0, GTTUN0NS   =         0,
    GTTUN1NT   =         0, MSSCCPFL   =         0, MSINVSIF   =         0,
    MSNACDPC   =         0, MSINVSLC   =         0, MSUDSCRD   =         0,
    MSULOST1   =         0, MSULOST2   =         0, MSULOST3   =         0,
    MSULOST4   =         0, NMTSKDSC0  =         0, NMTSKDSC1  =         0,
    NMTSKDSC2  =         0, NMTSKDSC3  =         0, OVSZMSG    =         0

;

    eagle10506 03-04-15 17:13:03 EST EAGLE 34.0.0
    END OF ON-DEMAND STP-NM MEASUREMENT REPORT
;
```

MP Example output file name: **`nm-stp_19990117_1550.csv`**

MP Example output file format:

```
"CLLI","SWREL","RPTDATE","RPTIME","TZ","RPTTYPE","RPTPD","IVALDATE",
"IVALSTART","IVALEND","NUMENTIDS"<cr><lf>
"tekelecstp","34.0.0-39.1.0","1999-01-17","15:51:37","EST",
"NETWORK MANAGEMENT MEASUREMENTS ON
STP","LAST","1999-01-17","15:45:00","15:50:00",1<cr><lf>
<cr><lf>
"STATUS","ORIGMSUS","TRMDMSUS","THRSWMSU","ORMSUOCT","TRMSUOCT","TSMSUOCT",
"MSINVDPC","MSINVSIO","OMSINVDPC","MSINVLNK","GTTPERFD","GTTUN0NS","GTTUN1NT",
"MSSCCPFL","MSINVSIF","MSNACDPC","MSINVSLC","MSUDSCRD","MSULOST1","MSULOST2",
"MSULOST3","MSULOST4","NMTSKDSC0","NMTSKDSC1","NMTSKDSC2","NMTSKDSC3","OVSZMSG"<cr
><lf>
"K",80,80,0,1540,1540,0,0,0,0,0,0,0,0,0,0,0,0,0,0,0,0,0,0,0,0,0,0<cr><lf>
```

Typical file size is:

System header	+ Report header	+ Report data		
250	+ 315	+ 477	=	1042 bytes

enttype=link

Certain registers are reported for HSLs or LSLs only. Other registers have different interpretations for HSLs than for LSLs. These registers are summarized in Table 4-12.

Table 4-12. HSL LSL Differences for Network Management Links

Event Name	LSL Usage	HSL Usage
DRFEPRO	As described	N/A - Not reported
DRBSYLNK	As described	N/A - Not reported
DRLCLPRO	As described	Initiated by MAAL - REPORT_LOCAL_PROCESSOR_OUTAGE

Example Commands:

OAM: *rept-meas:type=nm:enttype=link:loc=xxxx:link=x*

MP: *rept-ftp-meas:type=nm:enttype=link*

Table 4-13. Network Management Link Measurements

Event Name	Description	Unit
DRFEPRO	**Duration of Far-End Processor Outage** - The cumulative duration that a link was unavailable to MTP level 3 because of a processor outage at the far-end network element (SIPO received).	seconds
DRBSYLNK	**Cumulative Duration of Busy Link Status**- The total elapsed time between the receipt of a busy LSSU, and when the next message was acknowledged. This is the sum of all occurrences of busy link status.	seconds
DRLCLPRO	**Duration of Local Processor Outage** - The cumulative duration that a link was unavailable to MTP level 3 because of a processor outage at the near-end network element. For HSLs, this is initiated by `MAAL-REPORT_LOCAL_PROCESSOR_OUTAGE`	seconds
DRLNKUNV	**Duration of Links Unavailable** - The total time a link was unavailable to MTP level 3 for any reason.	seconds
ECCNGLV1	**Event Count for Entering Level 1 Link Congestion** - The total number of times that link congestion level 1 was entered.	peg count
ECCNGLV2	**Event Count for Entering Level 2 Link Congestion** - The total number of times that link congestion level 2 was entered.	peg count
ECCNGLV3	**Event Count for Entering Level 3 Link Congestion** - The total number of times that link congestion level 3 was entered.	peg count
MSUDISC0	**Priority 0 MSUs Discarded Due to Congestion** - The total number of priority 0 MSUs discarded due to congestion (any level).	peg count

Table 4-13. Network Management Link Measurements (Continued)

Event Name	Description	Unit
MSUDISC1	**Priority 1 MSUs Discarded Due to Congestion -** The total number of priority 1 MSUs discarded due to congestion (any level).	peg count
MSUDISC2	**Priority 2 MSUs Discarded Due to Congestion -** The total number of priority 2 MSUs discarded due to congestion (any level).	peg count
MSUDISC3	**Priority 3 MSUs Discarded Due to Congestion -** The total number of priority 3 MSUs discarded due to congestion (any level).	peg count
NMGWSDSABL	**Number of Times GWS Disabled** - Number of times that gateway screening was disabled because of a processor overload.	peg count
STATUS	**Indication of Data Validity** - ***K*** indicates good data; ***I*** indicates incomplete interval; ***N*** indicates data not current.	status
TDCNGLV1	**Total Duration of Level 1 Link Congestion -** The total time the link was in level 1 congestion.	seconds
TDCNGLV2	**Total Duration of Level 2 Link Congestion -** The total time the link was in level 2 congestion.	seconds
TDCNGLV3	**Total Duration of Level 3 Link Congestion -** The total time the link was in level 3 congestion.	seconds

OAM Example Output:

```
    eagle10506 03-04-15 14:15:17 EST EAGLE 34.0.0
    TYPE OF REPORT: NETWORK MANAGEMENT MEASUREMENTS ON LINK
    REPORT PERIOD: LAST
    REPORT INTERVAL:  03-04-15,  14:10:00 THROUGH 14:14:59

    LINK-NM MEASUREMENTS: LOC: 1201, LINK: A  , LSN: lsn123

    These measurements are from 03-04-15, 14:10:00 through 14:14:59.
    DRLNKUNV   =         0, TDCNGLV1   =         0, TDCNGLV2   =         0,
    TDCNGLV3   =         0, ECCNGLV1   =         0, ECCNGLV2   =         0,
    ECCNGLV3   =         0, MSUDISC0   =         0, MSUDISC1   =         0,
    MSUDISC2   =         0, MSUDISC3   =         0, DRFEPRO    =         0,
    DRBSYLNK   =         0, NMGWSDSABL =         0, DRLCLPRO   =         0

;
    eagle10506 03-04-15 14:15:18 EST EAGLE 34.0.0
    END OF ON-DEMAND LINK-NM MEASUREMENT REPORT
;

    eagle10506 03-04-15 14:15:26 EST EAGLE 34.0.0
    TYPE OF REPORT: NETWORK MANAGEMENT MEASUREMENTS ON LINK
    REPORT PERIOD: LAST
    REPORT INTERVAL:  03-04-15,  14:10:00 THROUGH 14:14:59

    LINK-NM MEASUREMENTS: LOC: 1204, LINK: A  , LSN: lsn123   (SAAL)

    These measurements are from 03-04-15, 14:10:00 through 14:14:59.
    DRLNKUNV   =         0, TDCNGLV1   =         0, TDCNGLV2   =         0,
    TDCNGLV3   =         0, ECCNGLV1   =         0, ECCNGLV2   =         0,
```

```
    ECCNGLV3   =         0, MSUDISC0   =         0, MSUDISC1   =         0,
    MSUDISC2   =         0, MSUDISC3   =         0, NMGWSDSABL =         0,
    DRLCLPRO   =         0

;

    eagle10506 03-04-15 14:15:27 EST EAGLE 34.0.0
    END OF ON-DEMAND LINK-NM MEASUREMENT REPORT
;
```

MP Example Output File Name: **`nm-link_19990117_1550.csv`**

MP Example Output File Format:

```
"CLLI","SWREL","RPTDATE","RPTIME","TZ","RPTTYPE","RPTPD","IVALDATE",
"IVALSTART","IVALEND","NUMENTIDS"<cr><lf>
"tekelecstp","34.0.0-39.1.0","1999-01-17","15:51:37","EST",
"NETWORK MANAGEMENT MEASUREMENTS ON
LINK","LAST","1999-01-17","15:45:00","15:50:00",200<cr><lf>
"NUMBER OF ENTIDS: 200"<cr><lf>
<cr><lf>
"STATUS","LSN","LOC","LINK","LNKTYPE","DRLNKUNV","TDCNGLV1","TDCNGLV2","TDCNGLV3",
"ECCNGLV1","ECCNGLV2","ECCNGLV3","MSUDISC0","MSUDISC1","MSUDISC2","MSUDISC3",
"DRFEPRO","DRBSYLNK","NMGWSDSABL","DRLCLPRO"<cr><lf>
"K","LSN27A","1201","A3","MTP2",0,0,0,0,0,0,0,0,0,0,0,0,0,0,0<cr><lf>

. . . . .

"K","LSN27B","1304","A","SAAL",0,0,0,0,0,0,0,0,0,0,0,,,0,0<cr><lf>
```

Assuming each data line will be:

4 char status + 8 char LSN + 7 char LOC + 5 char LINK +
7 char LNKTYPE + 15*(6 char data) + 2 = 123 chars

For a report of 200 links, the typical file size is:

System header + Report header + Report data

250 + 208 + 24600 = 25058 bytes

enttype=lnkset

Example Commands:

OAM: *rept-meas:type=nm:enttype=lnkset*:lsn=lsnxxx

MP: *rept-ftp-meas:type=nm:enttype=lnkset*

Table 4-14. Network Management Linkset Measurements

Event Name	Description	Unit
OCTTRAN	**MSU Octets Transmitted** - The total number of octets associated with MSUs transmitted to the far-end, including those added in MTP{ level 2 processing and retransmissions.	octets
OCTRECVD	**MSU Octets Received** - The total number of octets associated with MSUs received, including those removed for MTP level 2 processing and those for which retransmission has been requested.	octets
MSUTRAN	**MSUs Transmitted** - Total number of MSUs transmitted to the far-end, including retransmissions.	peg count
MSURECVD	**MSUs Received** - The total number of MSUs received, including those for which retransmission has been requested.	peg count
STATUS	**Indication of Data Validity** - ***K*** indicates good data; ***I*** indicates incomplete interval; ***N*** indicates data not current.	status

OAM Example Output:

```
    tekelecstp 99-02-15 14:15:17 EST EAGLE 34.0.0
    TYPE OF REPORT: NETWORK MANAGEMENT MEASUREMENTS ON LNKSET
    REPORT PERIOD: LAST
    REPORT INTERVAL:  99-02-15,  14:10:00 THROUGH 14:14:59

    LNKSET-NM MEASUREMENTS: lsnxxx

    These measurements are from 99-02-15, 14:10:00 through 14:14:59.
    OCTTRAN    =         0, OCTRECVD   =         0, MSUTRAN    =         0,
    MSURECVD   =         0
;
    tekelecstp 99-02-15 14:15:18 EST EAGLE 34.0.0
    END OF ON-DEMAND LNKSET-NM MEASUREMENT REPORT
;
```

MP Example Output File Name: **nm-lnkset_19990117_1550.csv**

MP Example Output File Format:

```
"CLLI","SWREL","RPTDATE","RPTIME","TZ","RPTTYPE","RPTPD","IVALDATE",
"IVALSTART","IVALEND","NUMENTIDS"<cr><lf>
"tekelecstp","34.0.0-39.1.0","1999-01-17","15:51:37","EST",
"NETWORK MANAGEMENT MEASUREMENTS ON
LINKSET","LAST","1999-01-17","15:45:00","15:50:00",200<cr><lf>
<cr><lf>
"STATUS","LSN","LNKTYPE","OCTTRAN","OCTRECVD","MSUTRAN","MSURECVD"<cr><lf>
"K","lsnxxx","SAAL",0,0,0,0<cr><lf>

. . . . .

"K","lsnxxx","MTP2",0,0,0,0<cr><lf>
```

Assuming each data line will be:

4 char status + 8 char LSN + 7 char LNKTYPE + 4*(6 char data) + 2 = 45 chars

For a report of 200 linksets, the typical file size is:

System header + Report header + Report data

250 + 69 + 9000 = 9319 bytes

Daily Availability Measurements

Daily Availability (AVLD) Reports provide measurements pertaining to link management.

Entity Types: Link

Accumulation Interval: 24 hours

STP Retention Period: 24 hours

Reporting Mode: On-demand, scheduled (MP only)

Accessible Collection Period: Last

Example Commands:

OAM: *rept-meas:type=avld:enttype=link:loc=xxxx:link=x:nzo=no*

MP *rept-ftp-meas:type=avld:enttype=link*

Table 4-15. Daily Availability Link Measurements

Event Name	Description	Unit
DRDCLFLR	**Cumulative Duration of Signaling Link Declared Failures All Types -** The cumulative duration of all link failures.	seconds
DRFEPRO	**Duration of Far-End Processor Outage** - The cumulative duration that a link was unavailable to MTP level 3 because of a processor outage at the far-end network element (SIPO received).	seconds
DRLCLPRO	**Duration of Local Processor Outage** - The cumulative duration that a link was unavailable to MTP level 3 because of a processor outage at the near-end network element.	seconds
DRLKINHB	**Duration of Signaling Link Mgmt Inhibit** - The duration that a signaling link was unavailable because a signaling link was inhibited.	seconds
FARMGINH	**Number of Far-End Management Inhibits** - Number of times that a link was successfully inhibited from the far-end.	peg count
NEARMGIH	**Number of Near-End Management Inhibits** - Number of times a link was unavailable to MTP level 3 because it was locally inhibited.	peg count
NMDCLFLR	**Number of Signaling Link Declared Failures All Types -** The cumulative total of all link failures.	peg count
STATUS	**Indication of Data Validity** - ***K*** indicates good data; ***I*** indicates incomplete interval; ***N*** indicates data not current.	status
SURCVERR	**Number of Signal Units Received In Error -** The number of signal units received with checksum errors, indicating transmission errors. For HSLs, this register reflects the number of SSCOP PDUs received with any errors.	peg count

OAM Example Output:

```
    eagle10506 03-04-15 13:10:34 EST EAGLE 34.0.0
    TYPE OF REPORT: DAILY AVAILABILITY MEASUREMENTS ON LINK
    REPORT PERIOD: LAST
    REPORT INTERVAL:  03-04-15,  00:00:00 THROUGH 12:59:59

    LINK-AVLD MEASUREMENTS: LOC: 1201, LINK: A   , LSN: lsn123

    These measurements are from 03-04-15, 00:00:00 through 12:59:59.
    NEARMGIH   =         0, FARMGINH   =         0, NMDCLFLR   =         0,
    DRDCLFLR   =         0, SURCVERR   =         0, DRLKINHB   =         0,
    DRFEPRO    =         0, DRLCLPRO   =         0

;

    eagle10506 03-04-15 13:10:35 EST EAGLE 34.0.0
    END OF ON-DEMAND LINK-AVLD MEASUREMENT REPORT
;
```

```
    eagle10506 03-04-15 13:10:44 EST EAGLE 34.0.0
    TYPE OF REPORT: DAILY AVAILABILITY MEASUREMENTS ON LINK
    REPORT PERIOD: LAST
    REPORT INTERVAL:  03-04-15,  00:00:00 THROUGH 12:59:59

    LINK-AVLD MEASUREMENTS: LOC: 1204, LINK: A  , LSN: lsn123    (SAAL)

    These measurements are from 03-04-15, 00:00:00 through 12:59:59.
    NEARMGIH   =         0, FARMGINH   =         0, NMDCLFLR   =         0,
    DRDCLFLR   =         0, SURCVERR   =         0, DRLKINHB   =         0,
    DRLCLPRO   =         0

;

    eagle10506 03-04-15 13:10:45 EST EAGLE 34.0.0
    END OF ON-DEMAND LINK-AVLD MEASUREMENT REPORT
;
```

MP Example Output File Name: **`avld-link_19990116_2400.csv`**

MP Example Output File Format:

```
"CLLI","SWREL","RPTDATE","RPTIME","TZ","RPTTYPE","RPTPD","IVALDATE",
"IVALSTART","IVALEND","NUMENTIDS"<cr><lf>
"tekelecstp","34.0.0-39.1.0","1999-01-17","15:51:37","EST",
"DAILY AVAILABILITY MEASUREMENTS ON
LINK","LAST","1999-01-16","00:00:00","24:00:00",600<cr><lf>
<cr><lf>
"STATUS","LOC","LINK","LNKTYPE","NEARMGIH","FARMGINH","NMDCLFLR","DRDCLFLR",
"SURCVERR","DRLKINHB","DRFEPRO","DRLCLPRO"<cr><lf>
"K","1204","A","SAAL",0,0,0,0,0,0,,0<cr><lf>

. . . . .

"K","5204","B3","MTP2",0,0,0,0,0,0,0,0<cr><lf>
```

Assuming each data line will be:

4 char status + 8 char LSN + 7 char LOC + 5 char LINK +
7 char LNKTYPE + 8*(6 char data) + 2 = 81 chars

For a report of 600 links, the typical file size is:

System header	+	Report header	+	Report data	=	
250	+	128	+	48600	=	48978 bytes

Day-To-Hour Availability Measurements

Day-To-Hour Availability (AVLDTH) Reports provide measurements pertaining to link management accumulating through the day.

Entity Types: Link

Accumulation Interval: Daily total to the last full hour

STP Retention Period: 1 hour

Reporting Mode: On-demand

Accessible Collection Period: Last

Example Commands:

OAM: *rept-meas:type=avldth:enttype=link:loc=xxxx:link=x:nzo=no*

MP: *rept-ftp-meas:type=avldth:enttype=link*

Table 4-16. Day-To-Hour Availability Link Measurements

Event Name	Description	Unit
DRDCLFLR	**Cumulative Duration of Signaling Link Declared Failures All Types -** The cumulative duration of all link failures.	seconds
DRFEPRO	**Duration of Far-End Processor Outage** - The cumulative duration that a link was unavailable to MTP level 3 because of a processor outage at the far-end network element (SIPO received).	seconds
DRLCLPRO	**Duration of Local Processor Outage** - The cumulative duration that a link was unavailable to MTP level 3 because of a processor outage at the near-end network element.	seconds
DRLKINHB	**Duration of Signaling Link Mgmt Inhibit** - The duration that a signaling link was unavailable because a signaling link was inhibited.	seconds
FARMGINH	**Number of Far-End Management Inhibits** - Number of times that a link was successfully inhibited from the far-end.	peg count
NEARMGIH	**Number of Near-End Management Inhibits** - Number of times a link was unavailable to MTP level 3 because it was locally inhibited.	peg count
NMDCLFLR	**Number of Signaling Link Declared Failures All Types -** The cumulative total of all link failures.	peg count
STATUS	**Indication of Data Validity** - ***K*** indicates good data; ***I*** indicates incomplete interval; ***N*** indicates data not current.	status
SURCVERR	**Number of Signal Units Received In Error -** The number of signal units received with checksum errors, indicating transmission errors. For HSLs, this register reflects the number of SSCOP PDUs received with any errors.	peg count

OAM Example Output:

```
    eagle10506 03-04-15 13:10:34 EST EAGLE 34.0.0
    TYPE OF REPORT: DAY-TO-HOUR AVAILABILITY MEASUREMENTS ON LINK
    REPORT PERIOD: LAST
    REPORT INTERVAL:  03-04-15,  00:00:00 THROUGH 12:59:59

    LINK-AVLDTH MEASUREMENTS: LOC: 1201, LINK: A  , LSN: lsn123

    These measurements are from 03-04-15, 00:00:00 through 12:59:59.
    NEARMGIH   =         0, FARMGINH   =         0, NMDCLFLR   =         0,
    DRDCLFLR   =         0, SURCVERR   =         0, DRLKINHB   =         0,
    DRFEPRO    =         0, DRLCLPRO   =         0

;

    eagle10506 03-04-15 13:10:35 EST EAGLE 34.0.0
    END OF ON-DEMAND LINK-AVLDTH MEASUREMENT REPORT
;


    eagle10506 03-04-15 13:10:44 EST EAGLE 34.0.0
    TYPE OF REPORT: DAY-TO-HOUR AVAILABILITY MEASUREMENTS ON LINK
    REPORT PERIOD: LAST
    REPORT INTERVAL:  03-04-15,  00:00:00 THROUGH 12:59:59

    LINK-AVLDTH MEASUREMENTS: LOC: 1204, LINK: A  , LSN: lsn123   (SAAL)

    These measurements are from 03-04-15, 00:00:00 through 12:59:59.
    NEARMGIH   =         0, FARMGINH   =         0, NMDCLFLR   =         0,
    DRDCLFLR   =         0, SURCVERR   =         0, DRLKINHB   =         0,
    DRLCLPRO   =         0

;

    eagle10506 03-04-15 13:10:45 EST EAGLE 34.0.0
    END OF ON-DEMAND LINK-AVLDTH MEASUREMENT REPORT
;
```

MP Example Output File Name: **`avldth-link_19990117_1500.csv`**

MP Example Output File Format:

```
"CLLI","SWREL","RPTDATE","RPTIME","TZ","RPTTYPE","RPTPD","IVALDATE",
"IVALSTART","IVALEND","NUMENTIDS"<cr><lf>
"tekelecstp","34.0.0-39.1.0","1999-01-17","15:51:37","EST",
"DAY-TO-HOUR AVAILABILITY MEASUREMENTS ON LINK","LAST",
"1999-01-17","00:00:00","15:00:00",600<cr><lf>
<cr><lf>
"STATUS","LSN","LOC","LINK","LNKTYPE","NEARMGIH","FARMGINH","NMDCLFLR","DRDCLFLR",
"SURCVERR","DRLKINHB","DRFEPRO","DRLCLPRO"<cr><lf>
"K","lsn234","1201","A","SAAL",0,0,0,0,0,0,,0<cr><lf>

. . . . .

"K","lsn789","5201","B3","MTP2",0,0,0,0,0,0,0,0<cr><lf>
```

Assuming each data line will be:

4 char status + 8 char LSN + 7 char LOC + 5 char LINK +
7 char LNKTYPE + 8*(6 char data) + 2 = 81 chars

For a report of 600 links, the typical file size is:

System header	+	Report header	+	Report data		
250	+	128	+	48600	=	48978 bytes

Availability Measurements

Availability Measurements (AVL) provide measurements relating to the availability of signaling links.

Entity Types: Link, STPLAN

Accumulation Interval: 30 minutes

Optional MP Accumulation Interval: Every 15 minutes

STP Retention Period: 24 hours

Reporting Mode: On-demand, scheduled (MP)

Accessible Collection Period: Last, active (OAM), or specific

enttype=link

Certain registers are reported for HSLs or LSLs only. Other registers have different interpretations for HSLs than for LSLs. These registers are summarized in Table 4-17..

Table 4-17. HSL LSL Differences for Availability Links

Event Name	LSL Usage	HSL Usage
SUSRECVD	Level 2 signaling units (all types) received	SSCOP PDUs (all types) received
SUSTRAN	Level 2 signaling units (all types) transmitted	SSCOP PDUs (all types) transmitted
SURCVERR	Level 2 signaling units (all types) received with errors	SSCOP PDUs (all types) received with errors
NDCFLABN	As described	N/A - not reported
NDCLFALP	As described	N/A - not reported
NDCLFSYNC	No data received on the line	DS1: LOS, LOF, or LCD indications
NDCFLXDA	Level 2 timer t7 expired	Timer NO_RESPONSE expired for POLL/STAT response
NDCFLXDC	Level 2 timer t6 expired	Timer NO_CREDIT expired
PCRN1N2EXC	As described	N/A - not reported

Example Commands:

OAM: *rept-meas:type=avl:enttype=link:loc=xxxx:link=x*

MP: *rept-ftp-meas:type=avl:enttype=link*

Table 4-18. Availability Link Measurements

Event Name	Description	Unit
DRDCLFLR	**Cumulative Duration of Signaling Link Declared Failures All Types -** The cumulative duration of all link failures.	seconds
DRFEPRO	**Duration of Far-End Processor Outage** - The cumulative duration that a link was unavailable to MTP level 3 because of a processor outage at the far-end network element (SIPO received).	seconds
DRLCLPRO	**Duration of Local Processor Outage** - The cumulative duration that a link was unavailable to MTP level 3 because of a processor outage at the near-end network element.	seconds
DRLKINHB	**Duration of Signaling Link Mgmt Inhibit** - The duration that a signaling link was unavailable because a signaling link was inhibited.	seconds
FARMGINH	**Number of Far-End Management Inhibits** - The total number of times that a link was inhibited by far-end management.	peg count
NDCLFLABN	**Number of Signaling Link Failures** – **Abnormal FIB/BSN** - Number of times the signaling link was taken out-of-service because of abnormal FIB/BSN received. A count was accumulated if two backward sequence number values in three consecutively received MSUs or FISUs are not the same as the previous one or any of the forward sequence numbers of the signal units in the retransmission buffer at the time they are retransmitted.	peg count
NDCLFALP	**Link Failure – Alignment or Proving Failure** - Number of times a signaling link was returned to out-of-service because of the excessive error rate detected by the alignment error rate monitor (AERM).	peg count
NDCLFINTR	**Link Failure – Too Many Interrupts** - Number of times the threshold for interrupts was exceeded. For instance, if there is excess noise on the line causing spurious interrupts, the STP recognizes that the threshold has been exceeded, and disables the link. This prevents the card from rebooting.	peg count
NDCLFSYNC	**Link Failure - Loss of Synchronization** - Number of times that the link was taken out-of-service because of a loss of synchronization.	peg count
NDCFLXDA	**Number of Signaling Link Failures** – **Excessive Delay of Acknowledgment** - Number of times a signaling link was out-of-service due to an excessive delay in acknowledgments.	peg count

Table 4-18. Availability Link Measurements (Continued)

Event Name	Description	Unit
NDCFLXDC	**Number of Signaling Link Failures – Excessive Duration of Congestion** - Number of times a signaling link was out-of-service because the timer T6 (remote congestion) expired.	peg count
NDCFLXER	**Number of Signaling Link Failures – Excessive Error Rate** - Number of times a signaling link was out-of-service because it reached the signal unit error rate monitor (SUERM) threshold.	peg count
NEARMGIH	**Number of Near-End Management Inhibits** - Number of times a link was unavailable to MTP level 3 because it was locally inhibited.	peg count
NMDCLFLR	**Number of Signaling Link Declared Failures All Types** - The cumulative total of all link failures.	peg count
NMFEPRO	**Number of Far-End Processor Outages** - The total number of far-end processor outages.	peg count
NMLCLPRO	**Number of Local Processor Outages** - The total number of local processor outages.	peg count
PCRN1N2EXC	**PCR N1 or N2 Count Exceeded** - The total number of forced retransmissions when preventive cyclic retransmission (PCR) is used as the error correction method on a link.	peg count
STATUS	**Indication of Data Validity** - ***K*** indicates good data; ***I*** indicates incomplete interval; ***N*** indicates data not current.	status
SURCVERR	**Number of SUs Received in Error** - The total number of SUs received in which errors were detected.	peg count
SUSRECVD	**Signaling Units Received** - The total number of signaling units received.	peg count
SUSTRAN	**Signaling Units Transmitted** - The total number of signaling units transmitted.	peg count

OAM Example Output:

```
eagle10506 03-04-15 12:33:05 EST EAGLE 34.0.0
TYPE OF REPORT: AVAILABILITY MEASUREMENTS ON LINK
REPORT PERIOD: LAST
REPORT INTERVAL:  03-04-15,  12:00:00 THROUGH 12:29:59

LINK-AVL MEASUREMENTS: LOC: 1201, LINK: A  , LSN: lsn123

These measurements are from 03-04-15, 12:00:00 through 12:29:59.
NEARMGIH   =         0, FARMGINH   =         0, NMDCLFLR   =         0,
DRDCLFLR   =         0, SURCVERR   =         0, DRLKINHB   =         0,
NDCFLABN   =         0, NDCLFSYNC  =         0, NDCFLXDA   =         0,
NDCFLXER   =         0, NDCFLXDC   =         0, NDCLFALP   =         0,
NDCLFINTR  =         0, NMFEPRO    =         0, NMLCLPRO   =         0,
DRFEPRO    =         0, DRLCLPRO   =         0, SUSRECVD   =   3300944,
SUSTRAN    =   3299200, PCRN1N2EXC =         0

;
```

```
    eagle10506 03-04-15 12:33:06 EST EAGLE 34.0.0
    END OF ON-DEMAND LINK-AVL MEASUREMENT REPORT
;

    eagle10506 03-04-15 12:33:16 EST EAGLE 34.0.0
    TYPE OF REPORT: AVAILABILITY MEASUREMENTS ON LINK
    REPORT PERIOD: LAST
    REPORT INTERVAL:  03-04-15,  12:00:00 THROUGH 12:29:59

    LINK-AVL MEASUREMENTS: LOC: 1204, LINK: A  , LSN: lsn123    (SAAL)

    These measurements are from 03-04-15, 12:00:00 through 12:29:59.
    Measurement data represents an incomplete interval.
    NEARMGIH   =         0, FARMGINH   =         0, NMDCLFLR   =         0,
    DRDCLFLR   =         0, SURCVERR   =         0, DRLKINHB   =         0,
    NDCLFSYNC  =         1, NDCFLXDA   =         0, NDCFLXER   =         0,
    NDCFLXDC   =         0, NDCLFINTR  =         0, NMLCLPRO   =         0,
    DRLCLPRO   =         0, SUSRECVD   =         0, SUSTRAN    =       110

;

    eagle10506 03-04-15 12:33:17 EST EAGLE 34.0.0
    END OF ON-DEMAND LINK-AVL MEASUREMENT REPORT
;
```

MP Example Output File Name: **`avl-link_19990117_1530.csv`**

MP Example Output File Format:

```
"CLLI","SWREL","RPTDATE","RPTIME","TZ","RPTTYPE","RPTPD","IVALDATE",
"IVALSTART","IVALEND","NUMENTIDS"<cr><lf>
"tekelecstp","34.0.0-39.1.0","1999-01-17","15:51:37","EST",
"AVAILABILITY MEASUREMENTS ON
LINK","LAST","1999-01-17","15:00:00","15:30:00",600<cr><lf>
<cr><lf>
"STATUS","LSN","LOC","LINK","LNKTYPE","NEARMGIH","FARMGINH","NMDCLFLR","DRDCLFLR",
"SURCVERR","DRLKINHB","NDCFLABN","NDCLFSYNC","NDCFLXDA","NDCFLXER","NDCFLXDC",
"NDCLFALP","NDCLFINTR","NMFEPRO","NMLCLPRO","DRFEPRO","DRLCLPRO","SUSRECVD",
"SUSTRAN","PCRN1N2EXC"<cr><lf>
"K","LS027A","1201","B2","MTP2",0,0,0,0,0,0,0,0,0,0,0,0,0,0,0,0,0,3300944,3299200,
0<cr><lf>

. . . . .

"K","LS288B","1204","A","SAAL",0,0,0,0,0,0,,1,0,0,0,,0,,0,,0,0,110,<cr><lf>
```

Assuming each data line will be:

4 char status + 8 char LSN + 7 char LOC + 5 char LINK +
7 char LNKTYPE + 20*(6 char data) + 2 = 153 chars

For a report of 600 links, the typical file size is:

System header + Report header + Report data

250 + 272 + 91800 = 92322 bytes

enttype=stplan

This enttype consists of measurements for LIM, TSM, and ACM cards.The outputs are separate for the OAM based measurements and combined for the MP based measurements. The MP based measurements appear after the OAM measurements for the ACM cards. The Status Event appears with the ACM measurements.

> **NOTE: The peg counts for STPLAN measurements have the possibility of rolling over during periods of high STPLAN message transmit and receive. On the measurement reports these measurements show up as negative numbers. This indicates STPLAN transmit and receive measurements have values greater than four gigabytes of data.**

Example Commands:

OAM: *rept-meas:type=avl:enttype=stplan*

MP: *rept-ftp-meas:type=avl:enttype=stplan*

Link Interface Module (LIM) measurements

Table 4-19. Availability STPLAN LIM Measurements

Event Name	Description	Unit
SLANDISC1	**STPLAN Discarded 1** - Number of indicated messages not copied to the host due to the STPLAN feature being disabled.	peg count
SLANDSBLD	**STPLAN Disabled** - The duration that the STPLAN screening/copy feature was disabled.	msecs
SLANSCRND	**STPLAN Screened** - Number of MSUs that were copied to the STPLAN interface after passing gateway screening.	peg count

OAM LIM Example Output:

```
    tekelecstp 03-02-06 11:02:07 WET EAGLE 34.0.0
    TYPE OF REPORT: AVAILABILITY MEASUREMENTS ON STPLAN
    REPORT PERIOD: LAST
    REPORT INTERVAL:  03-02-06,  10:30:00 THROUGH 10:59:59

    STPLAN-AVL MEASUREMENTS: LOC: 1201

    These measurements are from 03-02-06, 10:30:00 through 10:59:59.
    SLANDSBLD  =         0, SLANDISC1  =         0, SLANSCRND  =         0

;

    tekelecstp 03-02-06 11:02:09 WET EAGLE 34.0.0
    END OF ON-DEMAND STPLAN-AVL MEASUREMENT REPORT
;
```

Transaction Service Module (TSM) measurements

Table 4-20. Availability STPLAN TSM Measurements

Event Name	Description	Unit
SLANDSBLD	**STPLAN Disabled** - The duration that the STPLAN screening/copy feature was disabled.	msecs
SLANSCRND	**STPLAN Screened** - Number of MSUs that were copied to the STPLAN interface after passing gateway screening.	peg count

OAM TSM Example Output:

```
    tekelecstp 03-02-06 11:02:21 EST EAGLE 34.0.0
    TYPE OF REPORT: AVAILABILITY MEASUREMENTS ON STPLAN
    REPORT PERIOD: LAST
    REPORT INTERVAL:  03-02-06,  10:30:00 THROUGH 10:59:59

    STPLAN-AVL MEASUREMENTS: LOC: 1208

    These measurements are from 03-02-06, 10:30:00 through 10:59:59.
    SLANDSBLD  =         0, SLANSCRND  =         0

;

    tekelecstp 03-02-06 11:02:22 EST EAGLE 34.0.0
    END OF ON-DEMAND STPLAN-AVL MEASUREMENT REPORT
;
```

Application Communications Module (ACM) measurements

Table 4-21. Availability STPLAN ACM Measurements

Event Name	Description	Unit
ENETALNERR	**Ethernet Alignment Error** - Number of packets not received over the STPLAN interface because of ethernet alignment errors.	peg count
ENETBUSBSY	**Ethernet Bus Busy** - Number of transmissions attempted when the STPLAN ethernet bus was busy.	peg count
ENETCOLERR	**Ethernet Collision Error** - Number of packets not transmitted by STPLAN because of excessive collisions on the STPLAN ethernet bus.	peg count
ENETCRCERR	**Ethernet CRC Error** - Number of packets not received on the STPLAN ethernet due to CRC errors.	peg count
ENETOCTRCV	**Ethernet Octets Received** - The total number of octets received on the STPLAN ethernet interface.	peg count
ENETOCTXMT	**Ethernet Octets Transmitted** - The total number of octets transmitted on the STPLAN ethernet interface.	peg count
ENETOVRERR	**Ethernet Receive Buffer Overflow Errors** - Number of packets not received by STPLAN because of a receive buffer overflow.	peg count

Table 4-21. Availability STPLAN ACM Measurements (Continued)

Event Name	Description	Unit
IPADDRERR	**IP Address Error**- The total number of inbound IP datagrams discarded on the STPLAN interface due to a bad destination address.	peg count
IPHDRERR	**IP Header Errors** - The total number of inbound IP datagrams discarded on the STPLAN interface due to header errors.	peg count
IPPROTERR	**IP Protocol Error** - Number of inbound IP datagrams discarded by STPLAN due to an error in the packet (invalid protocol).	peg count
SLANDISC2	**STPLAN Discarded 2** - Number of MSUs discarded due to the host being unreachable.	peg count
SLANXMIT	**STPLAN Transmit** - Number of MSUs sent to the host destination.	peg count
STATUS	**Indication of Data Validity** - ***K*** indicates good data; ***I*** indicates incomplete interval; ***N*** indicates data not current.	status
TCPCONNFLD	**TCP Connections Failed -** The total number of TCP connections that have failed on the STPLAN interface.	peg count
TCPSEGRCVD	**TCP Segment Received -** The total number of TCP segments received on the STPLAN interface.	peg count
TCPSEGSENT	**TCP Segment Sent -** The total number of TCP segments sent on the STPLAN interface.	peg count
TCPSEGXMT2	**TCP Segment Retransmitted -** The total number of TCP segments retransmitted on the STPLAN interface.	peg count
TCPRCVERR	**TCP Receive Error** - The total number of TCP segments received on the STPLAN interface in error.	peg count
TCPRSTSENT	**TCP Reset Sent** - The total number of TCP segments sent containing the reset (RST) flag on the STPLAN interface.	peg count

OAM ACM Example Output:

```
tekelecstp 03-02-06 11:02:34 EST EAGLE 34.0.0
TYPE OF REPORT: AVAILABILITY MEASUREMENTS ON STPLAN
REPORT PERIOD: LAST
REPORT INTERVAL:  03-02-06,  10:30:00 THROUGH 10:59:59

STPLAN-AVL MEASUREMENTS: LOC: 1101

These measurements are from 03-02-06, 10:30:00 through 10:59:59.
SLANDISC2  =         0, SLANXMIT   =         0, ENETALNERR =         0,
ENETCRCERR =         0, ENETCOLERR =         0, ENETBUSBSY =         0,
ENETOVRERR =         0, ENETOCTXMT =         0, ENETOCTRCV =    124804,
TCPCONNFLD =         0, TCPSEGRCVD =         0, TCPSEGSENT =         0,
TCPSEGXMT2 =         0, TCPRCVERR  =         0, TCPRSTSENT =         0,
IPHDRERR   =         0, IPADDRERR  =         0, IPPROTERR  =         0

;
```

```
    tekelecstp 03-02-06 11:02:36 EST EAGLE 34.0.0
    END OF ON-DEMAND STPLAN-AVL MEASUREMENT REPORT
;
```

MP Example Output File Name: **avl-stplan_19990117_1530.csv**

MP Example Output File Format:

```
"CLLI","SWREL","RPTDATE","RPTIME","TZ","RPTTYPE","RPTPD","IVALDATE",
"IVALSTART","IVALEND","NUMENTIDS"<cr><lf>
"tekelecstp","34.0.0-39.1.0","1999-01-17","15:51:37","EST",
"AVAILABILITY MEASUREMENTS ON
STPLAN","LAST","1999-01-17","15:00:00","15:30:00",3<cr><lf>
<cr><lf>
"STATUS","TYPE","LOC","SLANDSBLD","SLANDISC1","SLANDISC2","SLANSCRND","SLANXMIT",
"ENETALNERR","ENETCRCERR","ENETCOLERR","ENETBUSBSY","ENETOVRERR","ENETOCTXMT",
"ENETOCTRCV","TCPCONNFLD","TCPSEGRCVD","TCPSEGSENT","TCPSEGXMT2","TCPRCVERR",
"TCPRSTSENT","IPHDRERR","IPADDRERR","IPPROTERR"<cr><lf>
"K","LIM","1201",0,0,0,,,,,,,,,,,,,,,,<cr><lf>
"K","TSM","2201",0,,0,,,,,,,,,,,,,,,,,<cr><lf>
"K","ACM","4101",,,,0,0,0,0,0,0,0,0,124804,0,0,0,0,0,0,0,0,0<cr><lf>
```

Typical file size is:

System header	+ Report header	+ Report data		
250	+ 53	+ 30	=	333 bytes

Daily Maintenance Measurements

The Daily Maintenance (MTCD) reports provide measurements useful in determining STP performance based on traffic.

Entity Types: STP, Link, Lnkset, STPLAN, LNP, NP, EIR, and MAPSCRN

Default Accumulation Interval: 24 hours

STP Retention Period: 24 hours (STP, Link, Lnkset, STPLAN)
7 days (LNP, NP, EIR, MAPSCRN)

Reporting Modes: Scheduled and On-Demand

Accessible Collection Periods: Last, Specific

enttype=stp

Example Commands:

OAM: *rept-meas:type=mtcd:enttype=stp*

MP: *rept-ftp-meas:type=mtcd:enttype=stp*

Table 4-22. Daily Maintenance STP Measurements

Event Name	Description	Unit
CRSYSAL	**Critical System Alarms** - The total number of critical system alarms.	peg count
DRDCLFLR	**Cumulative Duration of Signaling Link Declared Failures All Types** - The cumulative duration of all link failures.	seconds
DURLKOTG	**Duration of Link Outage** - The total time a link was unavailable to MTP level 3 for any reason.	seconds
DTAMSULOST	**DTA MSUs Lost** - The total number of MSUs that were discarded because the redirect function was turned off or the original MSU was too large to be encapsulated.	peg count
GFGTMATCH	**G-Flex GTTs with Match** - The total number of G-Flex Global Title Translations successfully completed.	peg count
GFGTNOMCH	**G-Flex GTTs No Match** - The total number of G-Flex Global Title Translations completed that did not match an entry in the GSM database.	peg count
GFGTNOLKUP	**G-Flex GTTs No Look-up** - The total number of G-Flex Global Title Translations that could not be looked up in the GSM database because of some error.	peg count
GTTPERFD	**GTTs Performed** - The total number of MSUs that successfully completed global title translation (GTT). Also includes G-Flex and INP MSUs that got a match in either the G-Flex, INP or GTT DB.	peg count

Table 4-22. Daily Maintenance STP Measurements (Continued)

Event Name	Description	Unit
GTTUN0NS	**GTTs Unable to Perform - Diagnostic 0: No Translation for Address of Such Nature –** Total number of times that the specified translation type in an MSU was not supported by the STP or the form of the GTT was incorrect for the given translation type. Also includes G-Flex, INP and GTT MSUs that did not match on new selectors (GTI, NP, NAI) in addition to ones not matching on TT.	peg count
GTTUN1NT	GTTs Unable to Perform - Diagnostic 1: No Translation for This Address - The sum total of times that SCCP could not find a translation in the translation table. This includes Global Title translations, Point Code translations, and Subsystem translations. **NOTE: Note: In general, this register contains the sum of the GTTUN1NT register in the systot-tt report and the CGGTTUN1NT**	peg count
MSINVDPC	**MSUs Rcvd – Invalid DPC** - Number of MSUs received and discarded because the DPC could not be found in the STP routing table.	peg count
OMSINVDPC	**MSUs Originated – Invalid DPC** - Number of MSUs originated with an invalid DPC.	peg count
MSINVSIF	**MSUs Discarded – Invalid SIF** - Number of MSUs that have been received and discarded because of an invalid SIF.	peg count
MSINVSIO	**MSUs Rcvd – Invalid Service Indicator Octet (SIO)** - Number of MSUs received and discarded because the service requested in the service indicator octet (SIO) was not supported by the STP.	peg count
MASYSAL	**Major system alarms** - The total number of major system alarms.	peg count
MISYSAL	**Minor system alarms** - The total number of minor system alarms.	peg count
MSINVLNK	**MSUs Discarded – Invalid Link** - Number of MSUs discarded because of an incorrect SLC. (The SLC refers to a nonexistent link or the same link.)	peg count
MSINVSLC	**MSUs Discarded – Invalid SLC** - Number of MSUs discarded because of an invalid SLC code in the ECO/COO.	peg count
MSNACDPC	**MSUs Discarded – Inaccessible DPC** - The total number of MSUs discarded because of an inaccessible DPC.	peg count
MSSCCPFL	**MSUs Discarded – Routing Failure** - Number of MSUs discarded due to an SCCP routing failure. Also includes G-Flex, INP MSUs that got a match from either the G-Flex, INP or GTT DB but cannot be routed due to PC or SS congestion, PC or SS unavailable, SS unequipped, or an unqualified error.	peg count

Table 4-22. Daily Maintenance STP Measurements (Continued)

Event Name	Description	Unit
MSUDSCRD	**MSUs Discarded – Gateway Screening** - The total number of MSUs that failed gateway screening and were discarded. See linkset report for individual peg counts.	peg count
MSULOST1	**MSUs Discarded – Level 2/Level 3 Queue Full** - Number of MSUs discarded because the level 2 to level 3 queue was full.	peg count
MSULOST2	**MSUs Discarded – Route On Hold Buffer Overflow** - Number of MSUs discarded because the routing buffer was in overflow.	peg count
MSULOST3	**MSUs Discarded – LS On Hold Buffer Overflow** - Number of MSUs discarded because the linkset-on-hold buffer was in overflow.	peg count
MSULOST4	**MSUs Discarded – Rcv Queue Full** - Number of MSUs discarded because the receive queue was full.	peg count
MSULOST5	**MSUs Discarded – LIM Init** - Number of MSUs discarded while the LIM card was initializing.	peg count
MTPRESTS	**MTP Restarts Initiated** - Number of times MTP restart was initiated by the STP. The count does not include the number of MTP restarts initiated as a result of messages from adjacent nodes.	peg count
ORIGMSUS	**Originated MSUs** - The total number of outgoing MSUs successfully passed to MTP level 2 for transmission, while carrying the STP point code in the OPC field.	peg count
OVSZMSG	**Oversized MTP 3 Messages** - Oversized MTP 3 messages exceeding 272 octets (level 3) that are received by an HSL and are discarded.	peg count
STATUS	**Indication of Data Validity** - ***K*** indicates good data; ***I*** indicates incomplete interval; ***N*** indicates data not current.	status
THRSWMSU	**Through-Switched MSUs** - The total number of MSUs that did not carry the STP point code in the OPC or the DPC, and were successfully passed to MTP level 2 for transmission.	peg count
TRMDMSUS	**Terminated MSUs** - The total number of incoming MSUs carrying the STP point code in the DPC.	peg count
TTMAPPF	**Translation Type Mapping Translations Performed** - The total number of Translation Type Mapping translations performed (that is, a mapped SS7 message translation type was found for the existing SS7 message translation type).	peg count
XLXTELEI	**X-List Entry Not Created** - The total number of times that an X-List entry was not created because the ELEI for the cluster was set to ‘yes’.	peg count
XLXTSPACE	**X-List Entry Not Created** - The total number of times an X-List entry was not created due to lack of space in the route/destination table.	peg count

Table 4-22. Daily Maintenance STP Measurements (Continued)

Event Name	Description	Unit
MSUSCCPFLR	**MSU SCCP Failure** - Total MSUs discarded due to SCCP conversion failure.	peg count

OAM Example Output:

```
    tekelecstp 97-01-02 15:51:37 EST EAGLE 34.0.0
    TYPE OF REPORT: DAILY MAINTENANCE MEASUREMENTS ON STP
    REPORT PERIOD: LAST
    REPORT INTERVAL:  97-01-01,  00:00:00 THROUGH 23:59:59

    STP-MTCD MEASUREMENTS

    These measurements are from 03-08-01, 00:00:00 through 23:59:59.
    ORIGMSUS   =  36102314, TRMDMSUS   =         0, THRSWMSU   =   6055635,
    MTPRESTS   =         0, DTAMSULOST =         0, MSINVDPC   =         1,
    MSINVSIO   =         0, OMSINVDPC  =         0, MSINVLNK   =         0,
    MSINVSIF   =         0, MSNACDPC   =         1, MSINVSLC   =         0,
    GTTPERFD   =         0, GTTUN0NS   =         0, GTTUN1NT   =         0,
    MSSCCPFL   =         0, MSUDSCRD   =         0, MSULOST1   =         0,
    MSULOST2   =         0, MSULOST3   =         0, MSULOST4   =         0,
    MSULOST5   =         0, DRDCLFLR   =     86400, DURLKOTG   =     86400,
    CRSYSAL    =       288, MASYSAL    =       600, MISYSAL    =       960,
    XLXTSPACE  =         0, XLXTELEI   =         0, TTMAPPF    =         0,
    OVSZMSG    =         0, GFGTMATCH  =         0, GFGTNOMCH  =         0,
    GFGTNOLKUP =         0, MSUSCCPFLR =         0

;
    tekelecstp 97-01-02 15:51:39 EST EAGLE 34.0.0
    END OF ON-DEMAND STP-MTCD MEASUREMENT REPORT
;
```

MP Example Output File Name: **`mtcd-stp_19990116_2400.csv`**

MP Example Output File Format:

```
"CLLI","SWREL","RPTDATE","RPTIME","TZ","RPTTYPE","RPTPD","IVALDATE",
"IVALSTART","IVALEND","NUMENTIDS"<cr><lf>
"tekelecstp","34.0.0-51.0.0","3003-08-17","15:51:37","EST",
"DAILY MAINTENANCE MEASUREMENTS ON
STP","LAST","2003-08-16","00:00:00","24:00:00",1<cr><lf>
<cr><lf>
"STATUS","ORIGMSUS","TRMDMSUS","THRSWMSU","MTPRESTS","DTAMSULOST","MSINVDPC",
"MSINVSIO","OMSINVDPC","MSINVLNK","MSINVSIF","MSNACDPC","MSINVSLC","GTTPERFD",
"GTTUN0NS","GTTUN1NT","MSSCCPFL","MSULOST1","MSULOST2","MSULOST3","MSULOST4",
"MSULOST5","DRDCLFLR","DURLKOTG","CRSYSAL","MASYSAL","MISYSAL","XLXTSPACE",
"XLXTELEI","TTMAPPF","MSUDSCRD","OVSZMSG","GFGTMATCH","GFGTNOMCH","GFGTNOLKUP",
"MSUSCCPFLR"<cr><lf>
"K",36102314,0,6055635,0,0,1,0,0,0,0,1,0,0,0,0,0,0,0,0,0,0,0,0,0,0,86400,86400,
288,600,960,0,0,0,0,0<cr><lf>
```

Typical file size:

System header + Report header + Report data

250 + 405 + 220 = 875 bytes

enttype=link

Certain registers are reported for HSLs or LSLs only. Other registers have different interpretations for HSLs than for LSLs. These registers are summarized in Table 4-23.

Table 4-23. HSL LSL Differences for Daily Maintenance Links

Event Name	LSL Usage	HSL Usage
DRBSYLNK	As described	N/A - not reported
NEGACKS	As described	N/A - not reported
SDURETRAN	N/A - not reported	As described
SURCVERR	Applies to FISU, LSSU, and MSUs	Applies to PDUs
TLNKACTV	As described	Time the link is active and giving MSUs to SAAL
NDCFLABN	As described	N/A - not reported
NDCFLXDA	Level 2 timer t7 expired	Timer NO_RESPONSE expired for POLL/STAT response
NDCFLXDC	Level 2 timer t6 expired	Timer NO_CREDIT expired
PCRN1N2EXC	As described	N/A - not reported
MSURETRN	As described	N/A - not reported
MSURCERR	As described	N/A - not reported
OCTRETRN	As described	N/A - not reported

Example Commands:

OAM: *rept-meas:type=mtcd:enttype=link:loc=xxxx:link=x*

MP: *rept-ftp-meas:type=mtcd:enttype=link*

Table 4-24. Daily Maintenance Link Measurements

Event Name	Description	Unit
ACHGOVRS	**Number of Automatic Changeovers -** Number of times that a changeover procedure was used to divert traffic from one link to alternative links.	peg count
DRBSYLNK	**Cumulative Duration of Busy Link Status-** The total elapsed time between the receipt of a busy LSSU, and when the next message was acknowledged. This is the sum of all occurrences of busy link status.	seconds
DRDCLFLR	**Cumulative Duration of Signaling Link Declared Failures All Types -** The cumulative duration of all link failures.	seconds
DRFEPRO	**Duration of Far-End Processor Outage** - The cumulative duration that a link was unavailable to MTP level 3 because of a processor outage at the far-end network element (SIPO received).	seconds

Table 4-24. Daily Maintenance Link Measurements (Continued)

Event Name	Description	Unit
DRLCLPRO	**Duration of Local Processor Outage** - The cumulative duration that a link was unavailable to MTP level 3 because of a processor outage at the near-end network element.	seconds
DRLKINHB	**Duration Link Inhibited -** The cumulative duration that a link was inhibited at the local or far-end network element.	seconds
ECCNGLV1	**Event Count for Entering Level 1 Link Congestion -** The total number of times that link congestion level 1 was entered.	peg count
ECCNGLV2	**Event Count for Entering Level 2 Link Congestion -** The total number of times that link congestion level 2 was entered.	peg count
ECCNGLV3	**Event Count for Entering Level 3 Link Congestion -** The total number of times that link congestion level 3 was entered.	peg count
FARMGINH	**Number of Far-End Management Inhibits -** Number of times a link was inhibited successfully from the far-end.	peg count
LNKAVAIL	**Link Available Time** - The total time the link was available to MTP level 3.	seconds
MSUDISC0	**Priority 0 MSUs Discarded Due to Congestion -** The total number of priority 0 MSUs discarded due to congestion (any level).	peg count
MSUDISC1	**Priority 1 MSUs Discarded Due to Congestion -** The total number of priority 1 MSUs discarded due to congestion (any level).	peg count
MSUDISC2	**Priority 2 MSUs Discarded Due to Congestion -** The total number of priority 2 MSUs discarded due to congestion (any level).	peg count
MSUDISC3	**Priority 3 MSUs Discarded Due to Congestion -** The total number of priority 3 MSUs discarded due to congestion (any level).	peg count
MSURCERR	The number of MSUs received in error.	peg count
MSURECVD	**MSUs Received -** Total number of MSUs received, including those for which retransmission has been requested.	peg count
MSURETRN	**MSUs Retransmitted** - Number of MSUs retransmitted because of errors.	peg count
MSUTRAN	**MSUs Transmitted -** Total number of MSUs transmitted to the far-end, including retransmissions.	peg count

Table 4-24. Daily Maintenance Link Measurements (Continued)

Event Name	Description	Unit
NDCFLABN	**Number of Signaling Unit Failures** - Abnormal FIB/BSN - Number of times the signaling link was taken out-of-service because the STP received abnormal FIBs/BSNs. A count accumulates if two backward sequence number values in three consecutively received MSUs, or FISUs are not the same as the previous one, or any of the forward sequence numbers of the signal units in the retransmission buffer at the time they are retransmitted.	peg count
NDCFLXDA	**Number of Signaling Link Failures** - Excessive Delay of Acknowledgment - Number of times a signaling link was out-of-service due to an excessive delay in acknowledgments.	peg count
NDCFLXDC	**Number of Signaling Link Failures** - Excessive Duration of Congestion - Number of times a signaling link was out-of-service because the timer T6 (remote congestion) expired.	peg count
NDCFLXER	**Number of Signaling Link Failures** - Excessive Error Rate - Number of times a signaling link was out-of-service because it reached the signal unit error rate monitor (SUERM) threshold.	peg count
NEARMGIH	**Number of Near-End Management Inhibits** - Number of times a link was unavailable to MTP level 3 because it was locally inhibited.	peg count
NEGACKS	**Number of Negative Acknowledgments Received** - Number of times the BSN in an MSU was inverted, indicating a retransmission request.	peg count
NMLCLPRO	**Number of Local Processor Outages** - The total number of local processor outages in this STP.	peg count
NMDCLFLR	**Number of Signaling Link Declared Failures All Types** - The cumulative total of all link failures.	peg count
NMFEPRO	**Number of Far-End Processor Outages** - Number of far-end processor outages that have occurred.	peg count
OCTRECVD	**MSU Octets Received** - Total number of octets associated with MSUs received, including those removed for MTP level 2 processing and those for which retransmission has been requested.	octets
OCTRETRN	The number MSU octets retransmitted	peg count
OCTTRAN	**MSU Octets Transmitted** - Total number of octets associated with MSUs transmitted to the far-end, including those added in MTP level 2 processing and retransmissions.	octets
PCRN1N2EXC	**PCR N1 or N2 Count Exceeded** - The total number of forced retransmissions when preventive cyclic retransmission (PCR) is used as the error correction method on a link.	peg count

Table 4-24. Daily Maintenance Link Measurements (Continued)

Event Name	Description	Unit
SDURETRN	**SSCOP SD PDUs Retransmitted** - The number of SSCOP SD PDUs that were retransmitted, based on an accumulated count of such retransmissions, conveyed to layer management. This measurement replaces the MTP level 2 negative acknowledgements.	peg count
STATUS	**Indication of Data Validity** - ***K*** indicates good data; ***I*** indicates incomplete interval; ***N*** indicates data not current.	status
SURCVERR	**Number of Signal Units Received In Error -** Number of signal units received with checksum errors, indicating transmission errors.	peg count
TDCNGLV1	**Total Duration of Level 1 Link Congestion -** The total time the link was in level 1 congestion.	seconds
TDCNGLV2	**Total Duration of Level 2 Link Congestion -** The total time the link was in level 2 congestion.	seconds
TDCNGLV3	**Total Duration of Level 3 Link Congestion -** The total time the link was in level 3 congestion.	seconds
TLNKACTV	**Signaling link active time -** the total time that the signaling link is in service and actively transmitting MSUs	seconds

OAM Example Output:

```
    eagle10506 03-04-15 13:11:01 EST EAGLE 34.0.0
    TYPE OF REPORT: DAILY MAINTENANCE MEASUREMENTS ON LINK
    REPORT PERIOD: LAST
    REPORT INTERVAL:  03-04-15,  00:00:00 THROUGH 12:59:59

    LINK-MTCD MEASUREMENTS: LOC: 1201, LINK: A  , LSN: lsn123

    These measurements are from 03-04-15, 00:00:00 through 12:59:59.
    MSUTRAN    =        95, MSURECVD   =        95, MSURETRN   =         0,
    OCTRETRN   =         0, OCTTRAN    =      1900, OCTRECVD   =      1900,
    TDCNGLV1   =         0, TDCNGLV2   =         0, TDCNGLV3   =         0,
    ECCNGLV1   =         0, ECCNGLV2   =         0, ECCNGLV3   =         0,
    MSUDISC0   =         0, MSUDISC1   =         0, MSUDISC2   =         0,
    MSUDISC3   =         0, TLNKACTV   =         0, LNKAVAIL   =      3159,
    ACHGOVRS   =         0, NEARMGIH   =         0, FARMGINH   =         0,
    NMDCLFLR   =         0, DRDCLFLR   =         0, SURCVERR   =         0,
    NEGACKS    =         0, DRLKINHB   =         0, NDCFLABN   =         0,
    NDCFLXDA   =         0, NDCFLXER   =         0, NDCFLXDC   =         0,
    NMFEPRO    =         0, NMLCLPRO   =         0, DRFEPRO    =         0,
    DRLCLPRO   =         0, MSURCERR   =         0, DRBSYLNK   =         0,
    PCRN1N2EXC =         0

;

    eagle10506 03-04-15 13:11:02 EST EAGLE 34.0.0
    END OF ON-DEMAND LINK-MTCD MEASUREMENT REPORT
;

    eagle10506 03-04-15 13:11:17 EST EAGLE 34.0.0
    TYPE OF REPORT: DAILY MAINTENANCE MEASUREMENTS ON LINK
    REPORT PERIOD: LAST
```

```
    REPORT INTERVAL:  03-04-15,  00:00:00 THROUGH 12:59:59

    LINK-MTCD MEASUREMENTS: LOC: 1204, LINK: A  , LSN: lsn123    (SAAL)

    These measurements are from 03-04-15, 00:00:00 through 12:59:59.
    MSUTRAN    =         0, MSURECVD   =         0, OCTTRAN    =         0,
    OCTRECVD   =         0, TDCNGLV1   =         0, TDCNGLV2   =         0,
    TDCNGLV3   =         0, ECCNGLV1   =         0, ECCNGLV2   =         0,
    ECCNGLV3   =         0, MSUDISC0   =         0, MSUDISC1   =         0,
    MSUDISC2   =         0, MSUDISC3   =         0, TLNKACTV   =         0,
    LNKAVAIL   =         0, ACHGOVRS   =         0, NEARMGIH   =         0,
    FARMGINH   =         0, NMDCLFLR   =         0, DRDCLFLR   =         0,
    SURCVERR   =         0, DRLKINHB   =         0, NDCFLXDA   =         0,
    NDCFLXER   =         0, NDCFLXDC   =         0, NMLCLPRO   =         0,
    DRLCLPRO   =         0, SDURETRN   =         0

;
    eagle10506 03-04-15 13:11:19 EST EAGLE 34.0.0
    END OF ON-DEMAND LINK-MTCD MEASUREMENT REPORT
;
```

MP Example Output File Name: **`mtcd-link_19990116_2400.csv`**

MP Example Output File Format:

```
"CLLI","SWREL","RPTDATE","RPTIME","TZ","RPTTYPE","RPTPD","IVALDATE",
"IVALSTART","IVALEND","NUMENTIDS"<cr><lf>
"tekelecstp","34.0.0-39.1.0","1999-01-17","15:51:37","EST",
"DAILY MAINTENANCE MEASUREMENTS ON
LINK","LAST","1999-01-16","00:00:00","24:00:00",500<cr><lf>
<cr><lf>
"STATUS","LSN","LOC","LINK","LNKTYPE","MSUTRAN","MSURECVD","MSURETRN","OCTRETRN",
"OCTTRAN","OCTRECVD","TDCNGLV1","TDCNGLV2","TDCNGLV3","ECCNGLV1","ECCNGLV2",
"ECCNGLV3","MSUDISC0","MSUDISC1","MSUDISC2","MSUDISC3","TLNKACTV","LNKAVAIL",
"ACHGOVRS","NEARMGIH","FARMGINH","NMDCLFLR","DRDCLFLR","SURCVERR","NEGACKS",
"DRLKINHB","NDCFLABN","NDCFLXDA","NDCFLXER","NDCFLXDC","NMFEPRO","NMLCLPRO",
"DRFEPRO","DRLCLPRO","MSURCERR","DRBSYLNK","PCRN1N2EXC","SDURETRN"<cr><lf>
"K","LSN100","1201","A","MTP2",95,95,0,0,1900,1900,0,0,0,0,0,0,0,0,0,0,3159,0,0,
0,0,0,0,0,0,0,0,0,0,0,0,0,0,0,0,0,0,0,0,0,<cr><lf>

. . . . .

"K","LSN200","5304","A","SAAL",0,0,,,0,0,0,0,0,0,0,0,0,0,0,0,0,0,0,0,0,0,0,,0,,0
,0,0,,0,,0,,,,0<cr><lf>
```

Assuming each data line will be:

4 char status + 9 char LSN + 6 char LOC + 4 char LINK +
7 char LKNTYPE + 38*(6 char data) + 2 = 260 chars

For a report of 500 links, the typical file size is:

System header + Report header + Report data

250 + 460 + 130000 = 130710 bytes

enttype=lnkset

Example Commands:

OAM: *rept-meas:type=mtcd:enttype=lnkset:lsn=ayyyyyyy*

MP: *rept-ftp-meas:type=mtcd:enttype=lnkset*

Table 4-25. Daily Maintenance Linkset Measurements

Event Name	Description	Unit
STATUS	**Indication of Data Validity** - ***K*** indicates good data; ***I*** indicates incomplete interval; ***N*** indicates data not current.	status
ZTTMAPI	**Translation Type Mapping Translation Performed** - MSUs Received on the Gateway Linkset - The total number of Translation Type Mapping translations performed for incoming Message Signal Units (MSUs) received on the specified linkset.	peg count
ZTTMAPO	**Translation Type Mapping Translation Performed** - MSUs Transmitted on the Gateway Linkset - The total number of translations performed on outgoing Message Signal Units (MSUs) for the specified linkset.	peg count

OAM Example Output:

```
    tekelecstp 01-08-18 12:01:47 EST EAGLE 34.0.0
    TYPE OF REPORT: DAILY MAINTENANCE MEASUREMENTS ON LINKSET
    REPORT PERIOD: LAST
    REPORT INTERVAL:  01-08-18,  00:00:00 THROUGH 11:59:59

    LNKSET-MTCD MEASUREMENTS: ls1201a

    These measurements are from 01-08-18, 00:00:00 through 11:59:59.
    ZTTMAPO    =    196611, ZTTMAPI    =         3

;

    tekelecstp 01-08-18 12:01:49 EST EAGLE 34.0.0
    END OF ON-DEMAND LNKSET-MTCD MEASUREMENT REPORT
;
```

MP Example Output File Name: **`mtcd-lnkset_19990116_2400.csv`**

MP Example Output File Format:

```
"CLLI","SWREL","RPTDATE","RPTIME","TZ","RPTTYPE","RPTPD","IVALDATE",
"IVALSTART","IVALEND","NUMENTIDS"<cr><lf>
"tekelecstp","34.0.0-39.1.0","1999-01-17","15:51:37","EST",
"DAILY MAINTENANCE MEASUREMENTS ON
LINKSET","LAST","1999-01-16","00:00:00","24:00:00",500<cr><lf>
<cr><lf>
"STATUS","LSN","LNKTYPE","ZTTMAPO","ZTTMAPI"<cr><lf>
"K","lsn100","SAAL",196611,3<cr><lf>

. . . . .
```

```
"K","lsn600","MTP2",123456,98374<cr><lf>
```

Assuming each data line will be:

4 char status + 9 char LSN + 7 char LNKTYPE + 2*(6 char data) + 2 = 34 chars

For a report of 500 linksets, the typical file size is:

System header + Report header + Report data

250 + 46 + 17000 = 17296 bytes

enttype=lnp

The enttype=lnp entity generates four separate reports per period. These reports for OAM based measurements are generated to CSV files in the FTA. The command example will generate the following daily reports:

- Daily LNP System Wide Measurements
- Daily LNP Measurements Per SSP
- Daily LNP Measurements Per LRN
- Daily LNP Measurements Per NPA

All the OAM reports are listed together as are the MP reports.

Example Commands:

OAM: *rept-meas:type=mtcd:enttype=lnp[:day=xxx:period=yyyyyyyy]*

MP: *rept-ftp-meas:type=mtcd:enttype=lnp[:day=xxx:period=yyyyyyyy]*

Table 4-26. Daily Maintenance LNP System Wide Measurements

Event Name	Description	Unit
LNPQRCV	*Trigger Based* The total number of queries received by LNPQS.	peg count
	Triggerless Number of encapsulated IAM messages received by LNPQS	peg count
LNPQDSC	*Trigger Based* The number of invalid queries that are discarded because no reply can be generated.	peg count
	Triggerless All invalid IAM messages are routed without LNP; LNPQTCPE is pegged.	not applicable

Table 4-26. Daily Maintenance LNP System Wide Measurements (Continued)

Event Name	Description	Unit
LNPQTCPE	*Trigger Based* The number of error replies with TCAP error codes.	peg count
	Triggerless The number of invalid encapsulated IAM messages received by LNPQS. Note that these messages are routed to their destinations with no LNP lookup.	peg count
LNPSREP	*Trigger Based* The number of successful replies.	peg count
	Triggerless The number of successful IAM messages.	peg count
LNPQUNPA	*Trigger Based* The number of correct queries received for non-ported DN when NPA-NXX is not provisioned.	peg count
	Triggerless The number of correct encapsulated IAM messages received for a non-ported DN, when the NPA-NXX is not provisioned.	peg count
STATUS	**Indication of Data Validity** - ***K*** indicates good data; ***I*** indicates incomplete interval; ***N*** indicates data not current.	status

Table 4-27. Daily Maintenance LNP Per SSP Measurements

Event Name	Description	Unit
SSPQRCV	*Trigger Based* Number of correct queries received per originating SSP.	peg count
	Triggerless The number of correct encapsulated IAM messages received by LNPQS per OPC.	peg count
CLASSGTRQ	Number of valid CLASS GTT received per originating SSP.	peg count
LIDBGTRQ	Number of valid LIDB GTT received per originating SSP.	peg count
SSPQRCVP	Number of correct queries received for ported TNs, per originating SSP.	peg count
SSPQRCVNP	Number of correct queries received for non-ported TNs, per originating SSP.	peg count
CLASSGTRQP	Number of CLASS Global Title Translation received for ported TNs, per originating SSP.	peg count
CLASSGTRQNP	Number of CLASS Global Title Translation received for non-ported TNs, per originating SSP.	peg count

Table 4-27. Daily Maintenance LNP Per SSP Measurements (Continued)

Event Name	Description	Unit
LIDBGTRQP	Number of LIDB Global Title Translation received for ported TNs, per originating SSP.	peg count
LIDBGTRQNP	Number of LIDB Global Title Translation received for non-ported TNs, per originating SSP.	peg count
CNAMGTRQP	Number of CNAM Global Title Translation received for ported TNs, per originating SSP.	peg count
CNAMGTRQNP	Number of CNAM Global Title Translation received for non-ported TNs, per originating SSP.	peg count
ISVMGTRQP	Number of ISVM Global Title Translation received for ported TNs, per originating SSP.	peg count
ISVMGTRQNP	Number of ISVM Global Title Translation received for non-ported TNs, per originating SSP.	peg count
WSMSCGTRQP	Number of WSMSC Global Title Translations received for ported TNs, per originating SSP.	peg count
WSMSCGTRQNP	Number of WSMSC Global Title Translations received for non-ported TNs, per originating SSP.	peg count
STATUS	**Indication of Data Validity** - ***K*** indicates good data; ***I*** indicates incomplete interval; ***N*** indicates data not current.	status

The following equations apply:

SSPQRCV = SSPQRCVP + SSPQRCVNP

CLASSGTRQ = CLASSGTRQP + CLASSGTRQNP

LIDBGTRQ = LIDBGTRQP + LIDBGTRQNP

Table 4-28. Daily Maintenance LNP LRN Measurements

Event Name	Description	Unit
LRNQRCV	*Trigger Based* The number of correct queries received per LRN.	peg count
	Triggerless The number of correct encapsulated IAM messages received per LRN.	peg count
STATUS	**Indication of Data Validity** - ***K*** indicates good data; ***I*** indicates incomplete interval; ***N*** indicates data not current.	status

Table 4-29. Daily Maintenance LNP NPA Measurements

Event Name	Description	Unit
NPAQRCV	The number of correct queries received per NPANXX for non-ported DN.	peg count
STATUS	**Indication of Data Validity** - ***K*** indicates good data; ***I*** indicates incomplete interval; ***N*** indicates data not current.	status

Daily LNP System Wide Measurements

OAM Example Output File Name: **M60_LNP.csv**

OAM Example Output File Format:

```
"tekelecstp 01-08-02 15:51:37 EST EAGLE 34.0.0 "<cr><lf>
"TYPE OF REPORT: DAILY MAINTENANCE MEASUREMENTS ON LNP SYSTEM"<cr><lf>
"REPORT PERIOD: LAST"<cr><lf>
"REPORT INTERVAL:  01-08-02,  00:00:00 THROUGH 23:59:59 "<cr><lf>
<cr><lf>
"LNPQRCV","LNPQDSC","LNPQTCPE","LNPSREP","LNPQUNPA"<cr><lf>
4294967295,4294967295,4294967295,4294967295,4294967295<cr><lf>
```

Daily LNP Measurements Per SSP

OAM Example output File Name: **M60_SSP.csv**

OAM Example Output File Format:

```
"tekelecstp 99-01-02 15:51:37 EST EAGLE 34.0.0 "<cr><lf>
"TYPE OF REPORT: DAILY MAINTENANCE MEASUREMENTS ON LNP SSP"<cr><lf>
"REPORT PERIOD: LAST"<cr><lf>
"REPORT INTERVAL:  99-01-01,  00:00:00 THROUGH 23:59:59 "<cr><lf>
"NUMBER OF ENTIDS: 2"<cr><lf>
<cr><lf>
"SSP","SSPQRCV","CLASSGTRQ","LIDBGTRQ""SSPQRCVP","SSPQRCVNP","CLASSGTRQP",
"CLASSGTRQNP","LIDBGTRQP","LIDBGTRQNP","CNAMGTRQP","CNAMGTRQNP","ISVMGTRQP","
ISVMGTRQNP","WSMSCGTRQP","WSMSCGTRQNP" <cr><lf>
"002-002-100",123456789,456789,99999,123456789,456789,99999,
123456789,456789,99999,123456789,456789,99999,123456789,456789,99999<cr><lf>
"002-002-123",123456789,456789,99999,123456789,456789,99999,
123456789,456789,99999,123456789,456789,99999,123456789,456789,99999<cr><lf>
```

Daily LNP Measurements Per LRN

OAM Example Output File Name: **M60_LRN.csv**

OAM Example Output File Format:

```
"tekelecstp 97-01-02 15:51:37 EST EAGLE 34.0.0 "<cr><lf>
"TYPE OF REPORT: DAILY MAINTENANCE MEASUREMENTS ON LNP LRN"<cr><lf>
"REPORT PERIOD: LAST"<cr><lf>
"REPORT INTERVAL:  97-01-01,  00:00:00 THROUGH 23:59:59 "<cr><lf>
"NUMBER OF ENTIDS: 6"<cr><lf>
<cr><lf>
"LRN","LRNQRCV"<cr><lf>
9194560000,123456789<cr><lf>
4087550001,23456789<cr><lf>
```

```
5155550000,456789<cr><lf>
3022330001,345<cr><lf>
7032110002,99999<cr><lf>
8123048059,4294967295<cr><lf>
```

Daily LNP Measurements Per NPA

OAM Example Output File Name: **M60_NPA.csv**

OAM Example Output File Format:

```
"tekelecstp 97-01-02 15:51:37 EST EAGLE 34.0.0 "<cr><lf>
"TYPE OF REPORT: DAILY MAINTENANCE MEASUREMENTS ON LNP NPXNXX"<cr><lf>
"REPORT PERIOD: LAST"<cr><lf>
"REPORT INTERVAL:  97-01-01,  00:00:00 THROUGH 23:59:59 "<cr><lf>
"NUMBER OF ENTIDS: 6"<cr><lf>
<cr><lf>
"NPANXX","NPAQRCV"<cr><lf>
919456,123456789<cr><lf>
408755,23456789<cr><lf>
515555,456789<cr><lf>
302233,345<cr><lf>
703211,99999<cr><lf>
812304,4294967295<cr><lf>
```

Daily LNP System Wide Measurements

MP Example Output File Name: **mtcd-lnp_19990116_2400.csv**

MP Example Output File Format:

```
"CLLI","SWREL","RPTDATE","RPTIME","TZ","RPTTYPE","RPTPD","IVALDATE",
"IVALSTART","IVALEND","NUMENTIDS"<cr><lf>
"tekelecstp","34.0.0-39.1.0","1999-01-17","15:51:37","EST",
"DAILY MAINTENANCE MEASUREMENTS ON LNP SYSTEM","LAST",
"1999-01-16","00:00:00","24:00:00",1<cr><lf>
<cr><lf>
"STATUS","LNPQRCV","LNPQDSC","LNPQTCPE","LNPSREP","LNPQUNPA"<cr><lf>
"K",429496729,429496729,429496729,429496729,429496729<cr><lf>
```

Typical file size is:

System header + Report header + Report data

250 + 63 + 34 = 347 bytes

Daily LNP Measurements Per SSP

MP Example Output File Name: **mtcd-ssp_19990116_2400.csv**

MP Example Output File Format:

```
"CLLI","SWREL","RPTDATE","RPTIME","TZ","RPTTYPE","RPTPD","IVALDATE","IVALSTART","I
VALEND","NUMENTIDS"<cr><lf>
"tekelecstp","34.0.0-39.1.0","1999-01-17","15:51:37","EST",
"DAILY MAINTENANCE MEASUREMENTS ON LNP
SSP","LAST","1999-01-16","00:00:00","24:00:00",200<cr><lf>
<cr><lf>
"STATUS","SSP","SSPQRCV","CLASSGTRQ","LIDBGTRQ","SSPQRCVP","SSPQRCVNP","CLASSGTRQP
","CLASSGTRQNP","LIDBGTRQP","LIDBGTRQNP","CNAMGTRQP","CNAMGTRQNP","ISVMGTRQP",
"ISVMGTRQNP","WSMSCGTRQP","WSMSCGTRQNP"<cr><lf>
```

```
"K","002-002-100",123456789,456789,99999,123456789,456789,99999,123456789,456789,
99999,123456789,456789,99999,123456789,456789,99999<cr><lf>

. . . . .

"K","002-005-123",123456789,456789,99999,123456789,456789,99999,123456789,456789,
99999,123456789,456789,99999,123456789,456789,99999<cr><lf>
```

Assuming each data line will be:

4 char status + 14 char SSP + 15*(6 char data) + 2 = 110 chars

For a report of 200 SSPs, the typical file size is:

System header + Report header + Report data

250 + 160 + 22000 = 22410 bytes

Daily LNP Measurements Per LRN

MP Example Output File Name: **`mtcd-lrn_19990116_2400.csv`**

MP Example Output File Format:

```
"CLLI","SWREL","RPTDATE","RPTIME","TZ","RPTTYPE","RPTPD","IVALDATE",
"IVALSTART","IVALEND","NUMENTIDS"<cr><lf>
"tekelecstp","34.0.0-39.1.0","1999-01-17","15:51:37","EST",
"DAILY MAINTENANCE MEASUREMENTS ON LNP
LRN","LAST","1999-01-16","00:00:00","24:00:00",600<cr><lf>
<cr><lf>
"STATUS","LRN","LRNQRCV"<cr><lf>
"K",9194560000,123456789<cr><lf>
"K",4087550001,23456789<cr><lf>
"K",5155550000,456789<cr><lf>

. . . . .

"K",3022330001,345<cr><lf>
"K",7032110002,99999<cr><lf>
"K",8123048059,4294967295<cr><lf>
```

Assuming each data line will be:

4 char status + 11 char LRN + 6 char data + 2 = 23 chars

For a report of 600 LRNs, the typical file size is:

System header + Report header + Report data

250 + 27 + 13800 = 14077 bytes

Daily LNP Measurements Per NPA

MP Example Output File Name: **`mtcd-npa_19990116_2400.csv`**

MP Example Output File Format:

```
"CLLI","SWREL","RPTDATE","RPTIME","TZ","RPTTYPE","RPTPD","IVALDATE",
"IVALSTART","IVALEND","NUMENTIDS"<cr><lf>
"tekelecstp","34.0.0-39.1.0","1999-01-17","15:51:37","EST",
"DAILY MAINTENANCE MEASUREMENTS ON LNP NPANXX","LAST",
```

```
"1999-01-16","00:00:00","24:00:00",600<cr><lf>
<cr><lf>
"STATUS","NPANXX","NPAQRCV"<cr><lf>
"K",919456,123456789<cr><lf>
"K",408755,23456789<cr><lf>
"K",515555,456789<cr><lf>

. . . . .

"K",302233,345<cr><lf>
"K",703211,99999<cr><lf>
"K",812304,4294967295<cr><lf>
```

Assuming each data line will be:

4 char status + 7 char NPANXX + 6 char data + 2 = 19 chars

For a report of 600 LRNs, the typical file size is:

System header + Report header + Report data

250 + 30 + 11400 = 11680 bytes

enttype=np

The enttype=np entity generates two separate reports per period. These reports for OAM based measurements are generated to CSV files in the FTA. The command example will generate the following daily reports:

- Daily INP and G-Port System Wide Measurements
- Daily INP and G-Port Measurements Per SSP

All the OAM reports are listed together as are the MP reports.

Example Commands:

OAM: *rept-meas:type=mtcd:enttype=np*

MP: *rept-ftp-meas:type=mtcd:enttype=np*

Table 4-30. Daily Maintenance INP and G-Port System Wide Measurements

Event Name	Description	Unit
INPQRCV	Number of total queries received by INPQS.	peg count
INPQDSC	Number of invalid queries that are discarded as no reply can be generated.	peg count
INPQTCPE	Number of error replies with TCAP error code.	peg count
INPSREP	Number of successful replies to INP non-queried queries. These replies will be either INP Connect or INP Continue.	peg count
GPSRRCV	Number of call related (SRI-Send Routing Information) messages received.	peg count

Table 4-30. Daily Maintenance INP and G-Port System Wide Measurements (Continued)

Event Name	Description	Unit
GPSRGTT	Number of call related (SRI-Send Routing Information) messages that fell through to GTT.	peg count
GPSRREP	Number of call related (SRI-Send Routing Information) messages that received G-Port service.	peg count
GPSRERR	Number of call related messages that cause an error response message (SRI-Send Routing Information NEGATIVE ACK).	peg count
GPNOCL	Number of non-call related messages relayed by G-Port.	peg count
GPNOCLGT	Number of non-call related messages that fell through to GTT.	peg count
IS41LRERR	Number of IS-41 location request - error response messages sent.	peg count
IS41LRMRCV	Number of IS-41 location request messages received.	peg count
IS41LRRTRN	Number of IS-41 location request - return result messages sent.	peg count
STATUS	**Indication of Data Validity** - ***K*** indicates good data; ***I*** indicates incomplete interval; ***N*** indicates data not current.	status

The following equations apply:

INPQRCV = INPQDSC + INPQTCPE + INPSREP

GPSRRCV = GPSRGTT + GPSRREP + GPSRERR

Table 4-31. Daily Maintenance INP and G-Port Per SSP Measurements

Event Name	Description	Unit
INPQSCONN	Number of non-errored QS messages with QS Connect responses, per originating SSP.	peg count
INPQSCONT	Number of non-errored QS messages with QS Continue responses, per originating SSP.	peg count
INPMRTR	Number of messages sent to MR service that receive MR translation, per originating SSP.	peg count
INPMRGTT	Number of messages sent to MR service that fall through to GTT, per originating SSP.	peg count
GPSRACK	Number of call related (SRI-Send Routing Information ACK) responses.	peg count
GPSRRLY	Number of call related (SRI-Send Routing Information) messages relayed.	peg count
GPNOCL	Number of non-call related messages relayed by G-Port.	peg count

Table 4-31. Daily Maintenance INP and G-Port Per SSP Measurements (Continued)

Event Name	Description	Unit
GPNOCLGT	Number of non-call related messages that fell through to GTT.	peg count
STATUS	**Indication of Data Validity** - ***K*** indicates good data; ***I*** indicates incomplete interval; ***N*** indicates data not current.	status

The following equation applies:

GPSRREP = ∑GPSRACK + ∑GPSRRLY

Daily INP and G-Port System Wide Measurements When INP=ON and GPORT=ON

OAM Example Output File Name: **M60_NP.csv**

OAM Example Output File Format:

```
"tekelecstp 97-01-02 15:51:37 EST EAGLE 34.0.0 "<cr><lf>
"TYPE OF REPORT: DAILY MAINTENANCE MEASUREMENTS ON NP SYSTEM"<cr><lf>
"REPORT PERIOD: LAST"<cr><lf>
"REPORT INTERVAL:  97-01-01,  00:00:00 THROUGH 23:59:59 "<cr><lf>
<cr><lf>


"INPQRCV","INPQDSC","INPQTCPE","INPSREP","GPSRRCV","GPSRGTT","GPSRREP",
"GPSRERR","GPNOCL","GPNOCLGT","IS41LRERR","IS41LRMRCV","IS41LRRTRN"<cr><lf>
4294967295,4294967295,4294967295,4294967295,4294967295,4294967295,4294967295,
4294967295,4294967295,4294967295<cr><lf>
```

Daily INP and G-Port Measurements Per SSP When INP=ON and GPORT=ON

OAM Example output File Name: **M60_SSP.csv**

OAM Example Output File Format:

```
"tekelecstp 97-01-02 15:51:37 EST EAGLE 34.0.0 "<cr><lf>
"TYPE OF REPORT: DAILY MAINTENANCE MEASUREMENTS ON NP  SSP"<cr><lf>
"REPORT PERIOD: LAST"<cr><lf>
"REPORT INTERVAL:  97-01-01,  00:00:00 THROUGH 23:59:59 "<cr><lf>
<cr><lf>

"INPQSCONN","INPQSCONT","INPMRTR","INPMRGTT","GPSRACK","GPSRRLY","GPNOCL",
"GPNOCLGT"<cr><lf>
4294967295,429495,4294967295,429495,4294967295,429495,4294967295,429495<cr><lf>
```

Daily INP and G-Port System Wide Measurements When INP=ON and GPORT=ON

MP Example Output File Name: **mtcd-np_19990116_2400.csv**

MP Example Output File Format:

```
"CLLI","SWREL","RPTDATE","RPTIME","TZ","RPTTYPE","RPTPD","IVALDATE",
"IVALSTART","IVALEND","NUMENTIDS"<cr><lf>
"tekelecstp","34.0.0-39.1.0","1999-01-17","15:51:37","EST",
"DAILY MAINTENANCE MEASUREMENTS ON NP
SYSTEM","LAST","1999-01-16","00:00:00","24:00:00",1<cr><lf>
<cr><lf>
"STATUS","INPQRCV","INPQDSC","INPQTCPE","INPSREP","GPSRRCV","GPSRGTT","GPSRREP",
"GPSRERR","GPNOCL","GPNOCLGT","IS41LRERR","IS41LRMRCV","IS41LRRTRN"<cr><lf>
"K",4294967295,4294967295,4294967295,4294967295,4294967295,4294967295,4294967295,
4294967295,4294967295,4294967295<cr><lf>
```

Typical file size is:

System header	+ Report header	+ Report data		
250	+ 113	+ 66	=	429 bytes

Daily INP and G-Port Measurements Per SSP When INP=ON and GPORT=ON

MP Example Output File Name: **mtcd-ssp_19990116_2400.csv**

MP Example Output File Format:

```
"CLLI","SWREL","RPTDATE","RPTIME","TZ","RPTTYPE","RPTPD","IVALDATE",
"IVALSTART","IVALEND","NUMENTIDS"<cr><lf>
"tekelecstp","34.0.0-39.1.0","1999-01-17","15:51:37","EST",
"DAILY MAINTENANCE MEASUREMENTS ON NP
SSP","LAST","1999-01-16","00:00:00","24:00:00",1<cr><lf>
<cr><lf>
"STATUS",
"INPQSCONN","INPQSCONT","INPMRTR","INPMRGTT","GPSRACK","GPSRRLY","GPNOCL",
"GPNOCLGT"<cr><lf>
"K",4294967295,429495,4294967295,429495,4294967295,429495,4294967295,429495<cr><lf
>
```

Typical file size is:

System header	+ Report header	+ Report data		
250	+ 98	+ 54	=	402 bytes

enttype=stplan

NOTE: The peg counts for STPLAN measurements have the possibility of rolling over during periods of high STPLAN message transmit and receive. On the measurement reports, these measurements show up as negative numbers. This indicates STPLAN transmit and receive measurements have values greater than four gigabytes of data.

Example Commands:

OAM: *rept-meas:type=mtcd:enttype=stplan*

MP: *rept-ftp-meas:type=mtcd:enttype=stplan*

Table 4-32. Daily Maintenance STPLAN Measurements

Event Name	Description	Unit
ENETALNERR	**Ethernet Alignment Error** - Number of packets not received over the STPLAN interface because of ethernet alignment errors.	peg count
ENETBUSBSY	**Ethernet Bus Busy -** Number of transmissions attempted when the STPLAN ethernet bus was busy.	peg count
ENETCRCERR	**Ethernet CRC Error** - Number of packets not received on the STPLAN ethernet due to CRC errors.	peg count
ENETCOLERR	**Ethernet Collision Error -** Number of packets not transmitted by STPLAN because of excessive collisions on the STPLAN ethernet bus.	peg count
ENETOCTRCV	**Ethernet Octets Received** - The total number of octets received on the STPLAN ethernet interface.	peg count
ENETOCTXMT	**Ethernet Octets Transmitted** - The total number of octets transmitted on the STPLAN ethernet interface.	peg count
ENETOVRERR	**Ethernet Receive Buffer Overflow Errors** - Number of packets not received by STPLAN because of a receive buffer overflow.	peg count
IPADDRERR	**IP Address Error**- The total number of inbound IP datagrams discarded on the STPLAN interface due to a bad destination address.	peg count
IPHDRERR	**IP Header Errors** - The total number of inbound IP datagrams discarded on the STPLAN interface due to header errors.	peg count
IPPROTERR	**IP Protocol Error** - Number of inbound IP datagrams discarded by STPLAN due to an error in the packet (invalid protocol).	peg count
SLANDISC1	**STPLAN Discarded 1** - Number of indicated messages not copied to the host due to the STPLAN feature being disabled.	peg count
SLANDISC2	**STPLAN Discarded 2** - Number of MSUs discarded due to the host being unreachable.	peg count
SLANDSBLD	**STPLAN Disabled** - The duration that the STPLAN screening/copy feature was disabled.	msecs

Table 4-32. Daily Maintenance STPLAN Measurements (Continued)

Event Name	Description	Unit
SLANSCRND	**STPLAN Screened** - Number of MSUs that were copied to the STPLAN interface after passing gateway screening.	peg count
SLANXMIT	**STPLAN Transmit** - Number of MSUs sent to the host destination.	peg count
STATUS	**Indication of Data Validity** - ***K*** indicates good data; ***I*** indicates incomplete interval; ***N*** indicates data not current.	status
TCPCONNFLD	**TCP Connections Failed -** The total number of TCP connections that have failed on the STPLAN interface.	peg count
TCPRCVERR	**TCP Receive Error -** The total number of TCP segments received on the STPLAN interface in error.	peg count
TCPRSTSENT	**TCP Reset Sent** - The total number of TCP segments sent containing the reset (RST) flag on the STPLAN interface.	peg count
TCPSEGRCVD	**TCP Segment Received -** The total number of TCP segments received on the STPLAN interface.	peg count
TCPSEGSENT	**TCP Segment Sent -** The total number of TCP segments sent on the STPLAN interface.	peg count
TCPSEGXMT2	**TCP Segment Retransmitted -** The total number of TCP segments retransmitted on the STPLAN interface.	peg count

OAM Example Output:

```
    tekelecstp 01-08-18 00:00:21 EST EAGLE 34.0.0
    TYPE OF REPORT: DAILY MAINTENANCE MEASUREMENTS ON STPLAN
    REPORT PERIOD: LAST
    REPORT INTERVAL:  01-08-17  00:00:00 THRU 23:59:59

    STPLAN-MTCD MEASUREMENTS

    SLANDSBLD  =         0, SLANDISC1  =         0, SLANDISC2  =         0,
    SLANSCRND  =         0, SLANXMIT   =         0, ENETALNERR =         0,
    ENETCRCERR =         0, ENETCOLERR =         0, ENETBUSBSY =         0,
    ENETOVRERR =         0, ENETOCTXMT =         0, ENETOCTRCV =         0,
    TCPCONNFLD =         0, TCPSEGRCVD =         0, TCPSEGSENT =         0,
    TCPSEGXMT2 =         0, TCPRCVERR  =         0, TCPRSTSENT =         0,
    IPHDRERR   =         0, IPADDRERR  =         0, IPPROTERR  =         0

;

    tekelecstp 01-08-18 00:00:22 EST EAGLE 34.0.0
    END OF DAILY STPLAN-MTCD MEASUREMENT REPORT
;
```

MP Example Output File Name: **`mtcd-stplan_19990116_2400.csv`**

MP Example Output File Format:

```
"CLLI","SWREL","RPTDATE","RPTIME","TZ","RPTTYPE","RPTPD","IVALDATE",
"IVALSTART","IVALEND","NUMENTIDS"<cr><lf>
```

```
"tekelecstp","34.0.0-39.1.0","1999-01-17","15:51:37","EST",
"DAILY MAINTENANCE MEASUREMENTS ON
STPLAN","LAST","1999-01-16","00:00:00","24:00:00",1<cr><lf>
<cr><lf>
"STATUS","SLANDSBLD","SLANDISC1","SLANDISC2","SLANSCRND","SLANXMIT","ENETALNERR",
"ENETCRCERR","ENETCOLERR","ENETBUSBSY","ENETOVRERR","ENETOCTXMT","ENETOCTRCV",
"TCPCONNFLD","TCPSEGRCVD","TCPSEGSENT","TCPSEGXMT2","TCPRCVERR","TCPRSTSENT",
"IPHDRERR","IPADDRERR","IPPROTERR"<cr><lf>
"K",0,0,0,0,0,0,0,0,0,0,0,0,0,0,0,0,0,0,0,0,0<cr><lf>
```

Typical file size is:

System header + Report header + Report data

250 + 282 + 260 = 792 bytes

enttype=eir

The EIR measurements specify the entity type EIR, and generate one daily report. The commands are specified with xxx as a three-letter abbreviation for a day of the week (MON, TUE, WED, THU, FRI, SAT, or SUN). The retention period for daily measurement records is seven days.

Example Commands:

MP:*rept-ftp-meas:type=mtcd:enttype=eir[:day=xxx:period=specific]*

Table 4-33 lists the EIR events and their descriptions.

Table 4-33. Daily Maintenance EIR Measurements

Event Name	Description	Unit
IMEIRCV	Total number of MAP_CHECK_IMEI messages received	peg count
WHITEIMEI	Total number of searches that resulted in a match with a “white listed” IMEI	peg count
GRAYIMEI	Total number of searches that resulted in a match with a “gray listed” IMEI	peg count
BLACKIMEI	Total number of searches that resulted in a match with a “black listed” IMEI	peg count
BLKALIMEI	Total number of searches that resulted in a match with a “black listed” IMEI, but were allowed due to IMSI Check match	peg count
BLKNALIMEI	Total number of searches that resulted in a match with a “black listed” IMEI, and the IMSI in the database did not match the IMSI in the message	peg count
UNKNIMEI	Total number of searches that resulted in a match with an “unknown” IMEI	peg count

Table 4-33. Daily Maintenance EIR Measurements (Continued)

Event Name	Description	Unit
NOMTCHIMEI	Total number of searches that resulted in no match in the database. **NOTE: NOMTCHIMEI is pegged whenever an IMEI is not found in the database.**	peg count

The following equation applies:

IMEIRCV = WHITEIMEI + GRAYIMEI + UNKNIMEI

MP Example Output File Name: **`mtcd-eir_20030816_2400.csv`**

MP Example Output File Format:

```
"CLLI","SWREL","RPTDATE","RPTIME","TZ","RPTTYPE","RPTPD","IVALDATE",
"IVALSTART","IVALEND","NUMENTIDS"<cr><lf>
"tekelecstp","34.0.0-51.1.0","2003-08-17","15:51:37","EST",
"DAILY MAINTENANCE MEASUREMENTS ON EIR SYSTEM","LAST","2003-08-16",
"00:00:00","24:00:00",1<cr><lf>
<cr><lf>
"IMEIRCV","WHITEIMEI","GRAYIMEI","BLACKIMEI","BLKALIMEI","BLKNALIMEI","UNKNIMEI","
NOMTCHIMEI"<cr><lf>
4294967295,4294967295,4294967295,4294967295,4294967295,4294967295,4294967295,
4294967295<cr><lf>
```

Typical file size is:

System header	+ Report header	+ Report data		
256	+ 95	+ 89	=	440 bytes

enttype=mapscrn

The enttype=mapscrn entity generates two separate reports per period.

The reports for OAM based measurements are generated to CSV files in the FTA. The command example generates the following daily OAM-based measurement reports when the GSM MAP Screening feature is activated:

- Daily MAP Screening System Wide Measurements
- Daily MAP Screening Measurements Per Server

The command example generates the following daily MP-based measurement reports when the GSM MAP/Enhanced GSM MAP Screening feature is activated:

- Daily MAP Screening System Wide Measurements
- Daily MAP Screening Measurements Per Path

All the OAM reports are listed together as are the MP reports.

NOTE: When MTP MAP Screening is enabled and on, the registers in Table 4-34 and Table 4-37 include the sum total of MTP-routed and GTT-routed messages for the particular event.

Example Commands:

OAM: *rept-meas:type=mtcd:enttype=mapscrn*

MP: *rept-ftp-meas:type=mtcd:enttype=mapscrn*

Table 4-34. Daily Maintenance MAP Screening System Wide Measurements

Event Name	Description	Unit
MSCRNPASS	Total number of messages that Passed MAP screening	count
MSCRNRJNE	Total number of messages that were Rejected by MAP screening because an entry was not found in the MAP screening table (i.e. rejected as System wide MAP Opcode action is DISCARD)	count
MSCRNRJFP	Total number of messages that were Rejected by MAP screening due to forbidden parameters in the message.	count
MSCRNPAFP	Total number of messages that contained the forbidden parameter but were not rejected due to Screening action set as PASS.	count
MSCRNPANE	Total number of messages, where an entry was not found in the MAP screening table but the Message was not rejected as screening action was marked as PASS (i.e. not rejected as System wide MAP Opcode action is PASS)	count
MSCRNRJOP	Total number of messages that got rejected as Message MAP Opcode was not found in the MAP Opcode table (system wide action - DISCARD for the non matching OPCODEs)	count
MSCRNDUP	Total number of messages that were selected by MAP Screening for the Duplicate screening action.	count
MSCRNFOR	Total number of messages that were selected by MAP Screening for the Forward screening action.	count
MSCRNDAD	Total number of messages thate were selected by MAP Screening for the Duplicate and Discard screening action.	count
STATUS	**Indication of Data Validity** - ***K*** indicates good data; ***I*** indicates incomplete interval; ***N*** indicates data not current.	status

Server Entity Identification information in Table 4-35 is used to clarify the server the Maintenance MAP Screening Per Server Measurements are applicable.

Table 4-35. Server Entity Identification

Entity Name	Description
SERVER	The screened origination address of the calling party address (CGPA) assigned when the GSM MAP screen was entered.
NP	The screened number plan value (NPV) assigned to the server address when the GSM MAP screen was entered. This field is filled with the default identifier * if no value was assigned.

Table 4-35. Server Entity Identification (Continued)

Entity Name	Description
NAI	The screened nature of address value (NAIV) assigned to the server address when the GSM MAP screen was entered. This field is filled with the default identifier * if no value was assigned.
OPCODE	The operation code number assigned when the GSM MAP opcode was entered.
NOTE: Measurements do not report entries created for a range of addresses.	

Server Path Entity Identification information in Table 4-36 is used to clarify the path the Maintenance MAP Screening Per Path Measurements are applicable.

Table 4-36. Path Entity Identification

Entity Name	Description

PATH	The screened origination address of the calling party address (CGPA-NP-NAI), or a combination of the screened destination address of the called party address (CDPA-NP-NAI) and the screened origination addresses assigned when the GSM MAP screen was entered.
	The possible fields within the path are delimited as follows to allow for efficient sorting:
	• When both the origination and destination addresses are present (as either single server entries or provisioned wildcard entries) the origination address is preceded by a carat (^) and the destination address is preceded by a "greater than" sign (>):
	`^CGPA-NP-NAI>CDPA-NP-NAI`
	• When only the origination address is present (occurs when the CDPA is a default wildcard) it is preceded by a "less than" sign (<):
	`<CGPA-NP-NAI`

CGPA	The calling party global title address assigned when the GSM MAP screen was entered. Any or all of the three fields (GTA, NP, NAI) can be filled with the identifier (*) if a wildcard value is assigned for that field. There is no default wildcard value for the CGPA.
CDPA	The called party global title address assigned when the GSM MAP screen was entered. Any or all of the three fields (GTA, NP, NAI) can be filled with the identifier (*) if a wildcard value is assigned for that field. If the CDPA value is not assigned, the default wildcard value, which is not printed, is assumed.
NP	The screened number plan value (NPV) assigned to the path address when the GSM MAP screen was entered. The identifier (*) is used to signify a wildcard NP.
NAI	The screened nature of address value (NAIV) assigned to the path address when the GSM MAP screen was entered. The identifier (*) is used to signify a wildcard NAI.
OPCODE	The operation code number assigned when the GSM MAP opcode was entered. The identifier (*) is used to signify a wildcard opcode.

Table 4-36. Path Entity Identification (Continued)

Entity Name	Description
NOTE: Measurements does not report entries created for a range of addresses. Measurements does not report default wildcard CDPA address in entries containing them. There can never be a default wildcard CGPA entry. All wildcard CGPA entries must be explicitly provisioned. There can never be an entry with only a CDPA path listed. The string formats were designed to allow efficient automated post processing of measurements reports. A brief note explaining the format is included in the report.	

Table 4-37. Daily Maintenance MAP Screening Per Server Measurements

Event Name	Description	Unit
MSCRNPASS	Total number of messages that Passed MAP screening	count
MSCRNRJFP	Total number of messages that got Rejected by MAP screening due to forbidden parameters in the message.	count
MSCRNDUP	Total number of messages per server that were selected by MAP Screening for the Duplicate screening action.	count
MSCRNFOR	Total number of messages per server that were selected by MAP Screening for the Forward screening action.	count
MSCRNDAD	Total number of messages per server that were selected by MAP Screening for the Duplicate screening action.	count
MSCRNPAFP	Total number of messages that contained the forbidden parameter but were not rejected due to Screening action set as PASS.	count
STATUS	**Indication of Data Validity** - ***K*** indicates good data; ***I*** indicates incomplete interval; ***N*** indicates data not current.	status

Daily MAP Screening System Wide Measurements

OAM Example Output File Name: **`M60_MAP.csv`**

OAM Example Output File Format:

```
"tekelecstp 97-01-02 15:51:37 EST EAGLE 34.0.0 "<cr><lf>
"TYPE OF REPORT: DAILY MAINTENANCE MEASUREMENTS ON MAP Screening SYSTEM"<cr><lf>
"REPORT PERIOD: LAST"<cr><lf>
"REPORT INTERVAL:  00-04-01,  00:00:00 THROUGH 23:59:59 "<cr><lf>
<cr><lf>
"MSCRNPASS","MSCRNRJNE","MSCRNRJFP","MSCRNPAFP","MSCRNPANE","MSCRNRJOP","MSCRNDUP"
,"MSCRNFOR","MSCRNDAD"<cr><lf>
4294967295,4294967295,4294967295,4294967295,4294967295,4294967295,4294967295,
4294967295,4294967295<cr><lf>
```

Daily MAP Screening Measurements Per Server

OAM Example output File Name: **`M60_SERV.csv`**

OAM Example Output File Format:

```
"tekelecstp 00-04-02 15:51:37 EST EAGLE 34.0.0-30.9.0 "<cr><lf>
"TYPE OF REPORT: DAILY MAINTENANCE MEASUREMENTS ON MAP Screening Server"<cr><lf>
"REPORT PERIOD: LAST"<cr><lf>
"REPORT INTERVAL:  00-04-01,  00:00:00 THROUGH 23:59:59 "<cr><lf>
"NUMBER OF ENTIDS: 2"<cr><lf>
<cr><lf>
"SERVER-NP-NAI-OPCODE",
"MSCRNPASS","MSCRNRJFP","MSCRNDUP","MSCRNFOR","MSCRNDAD","MSCRNPAFP"<cr><lf>
"123456789012345-0-0-0",
1234567890,1234567890,1234567890,1234567890,1234567890,1234567890<cr><lf>
"098765432154321-15-127-1",
5555555555,6666666666,1234567890,1234567890,1234567890,1234567890<cr><lf>
"919468-*-*-255",
1234567890,1234567890,1234567890,1234567890,1234567890,1234567890<cr><lf>
```

Daily MAP Screening System Wide Measurements

MP Example Output File Name: **`mtcd-map_19990116_2400.csv`**

MP Example Output File Format:

```
"CLLI","SWREL","RPTDATE","RPTIME","TZ","RPTTYPE","RPTPD","IVALDATE",
"IVALSTART","IVALEND","NUMENTIDS"<cr><lf>
"tekelecstp","34.0.0-39.1.0","1999-01-17","15:51:37","EST",
"DAILY MAINTENANCE MEASUREMENTS ON MAP SCREENING SYSTEM","LAST",
"1999-01-16","00:00:00","24:00:00",1<cr><lf>
<cr><lf>
"STATUS","MSCRNPASS","MSCRNRJOP","MSCRNRJNE","MSCRNRJFP","MSCRNPAFP","MSCRNPANE","
MSCRNFOR","MSCRNDUP","MSCRNDAD"<cr><lf>
"K",4294967295,4294967295,4294967295,4294967295,4294967295,4294967295,4294967295,4
294967295,4294967295<cr><lf>
```

Typical file size is:

System header + Report header + Report data

250 + 116 + 60 = 426 bytes

Daily MAP Screening Measurements Per Path

MP Example Output File Name: **`mtcd-path_19990116_2400.csv`**

MP Example Output File Format:

```
"CLLI","SWREL","RPTDATE","RPTIME","TZ","RPTTYPE","RPTPD","IVALDATE",
"IVALSTART","IVALEND","NUMENTIDS"<cr><lf>
"tekelecstp","34.0.0-53.8.0","1999-01-17","15:51:37","EST",
"DAILY MAINTENANCE MEASUREMENTS ON MAP SCREENING PATH","LAST",
"1999-01-16","00:00:00","24:00:00",2<cr><lf>
<cr><lf>
For a path containing CGPA only, PATH-OPCODE = <CGPA-NP-NAI-OPCODE<cr><lf>
For a path containing both CGPA and CDPA, PATH-OPCODE =
^CGPA-NP-NAI>CDPA-NP-NAI-OPCODE
<cr><lf>
"STATUS","PATH-OPCODE","MSCRNPASS","MSCRNRJFP","MSCRNFOR","MSCRNDUP", "MSCRNDAD",
"MSCRNPAFP"<cr><lf>
"K","<123456789012345-0-0-0",1234567890,1234567890,1234567890,1234567890,123456789
0, 1234567890<cr><lf>
"K","<919468-*-*-120",1234567890,1234567890,1234567890,1234567890,1234567890,12345
67890<cr><lf>
"K","^919468-5-63>919575-12-100-25",1234567890,1234567890,1234567890,1234567890,
1234567890,1234567890<cr><lf>
```

```
"K","^540992-14-45-125>919468-*-*-*",1234567890,1234567890,1234567890,1234567890,
1234567890,1234567890<cr><lf>
```

Assuming each data line will be:

4 char status + 40 char PATH-OPCODE + 6*(6 char data) + 2 = 82 chars

For a report of 20 paths, the typical file size is:

System header + Report header + Report data

250 + 244 + 1640 = 2134 bytes

Day-to-Hour Maintenance Measurements

The Maintenance Day-to-Hour (MTCDTH) report provides the current value of various maintenance measurements accumulating during the day.

Entity Types: STP, Link, Lnkset, STPLAN

Accumulation Interval: Cumulative Daily Total to the last full hour.

STP Retention Period: 1 hour

Reporting Mode: On-demand

Accessible Collection Periods: Last

enttype=stp

Example Commands:

OAM: *rept-meas:type=mtcdth:enttype=stp*

MP: *rept-ftp-meas:type=mtcdth:enttype=stp*

Table 4-38. Maintenance Day-to-Hour STP Measurements

Event Name	Description	Unit
CRSYSAL	**Critical System Alarms** - The total number of critical system alarms.	peg count
DRDCLFLR	**Cumulative Duration of Signaling Link Declared Failures All Types -** The cumulative duration of all link failures.	seconds
DURLKOTG	**Duration of Link Outage** - The total time a link was unavailable to MTP level 3 for any reason.	seconds
DTAMSULOST	**DTA MSUs Lost** - The total number of MSUs that were discarded because the redirect function was turned off or the original MSU was too large to be encapsulated.	peg count
GFGTMATCH	**G-Flex GTTs with Match** - The total number of G-Flex Global Title Translation successfully completed.	peg count

Table 4-38. Maintenance Day-to-Hour STP Measurements (Continued)

Event Name	Description	Unit
GFGTNOMCH	**G-Flex GTTs No Match** - The total number of G-Flex Global Title Translations completed that did not match an entry in the GSM database.	peg count
GFGTNOLKUP	**G-Flex GTTs No Look-up** - The total number of G-Flex Global Title Translations that could not be looked up in the GSM database because of some error.	peg count
GTTPERFD	**GTTs Performed** - The total number of MSUs that successfully completed global title translation (GTT). Also includes G-Flex and INP MSUs that got a match in either the G-Flex, INP or GTT DB.	peg count
GTTUN0NS	**GTTs Unable to Perform - Diagnostic 0: No Translation for Address of Such Nature –** Total number of times that the specified translation type in an MSU was not supported by the STP or the form of the GTT was incorrect for the given translation type. Also includes G-Flex, INP and GTT MSUs that did not match on new selectors (GTI, NP, NAI) in addition to ones not matching on TT.	peg count
GTTUN1NT	**GTTs Unable to Perform - Diagnostic 1: No Translation for This Address –** Number of times that a match for the global title could not be found in the translation table. Also includes G-Flex, INP MSUs that fell through to GTT, got a selector match, but still did not get a match on the GTA.	peg count
MSINVDPC	**MSUs Rcvd – Invalid DPC** - Number of MSUs received and discarded because the DPC could not be found in the STP routing table.	peg count
MSINVSIF	**MSUs Discarded – Invalid SIF** - Number of MSUs that have been received and discarded because of an invalid SIF.	peg count
MASYSAL	**Major system alarms** - The total number of major system alarms.	peg count
MISYSAL	**Minor system alarms** - The total number of minor system alarms.	peg count
MSINVSIO	**MSUs Rcvd – Invalid Service Indicator Octet (SIO)** - Number of MSUs received and discarded because the service requested in the service indicator octet (SIO) was not supported by the STP.	peg count
MSINVLNK	**MSUs Discarded – Invalid Link** - Number of MSUs discarded because of an incorrect SLC. (The SLC refers to a nonexistent link or the same link.)	peg count
MSINVSLC	**MSUs Discarded – Invalid SLC** - Number of MSUs discarded because of an invalid SLC code in the ECO/COO.	peg count
MSNACDPC	**MSUs Discarded – Inaccessible DPC** - The total number of MSUs discarded because of an inaccessible DPC.	peg count

Table 4-38. Maintenance Day-to-Hour STP Measurements (Continued)

Event Name	Description	Unit
MSSCCPFL	**MSUs Discarded – Routing Failure -** Number of MSUs discarded due to an SCCP routing failure. Also includes G-Flex, INP MSUs that got a match from either the G-Flex, INP or GTT DB but cannot be routed due to PC or SS congestion, PC or SS unavailable, SS unequipped, or an unqualified error.	peg count
MSUDSCRD	**MSUs Discarded – Gateway Screening -** The total number of MSUs that failed gateway screening and were discarded. See linkset report for individual peg counts.	peg count
MSULOST1	**MSUs Discarded – Level 2/Level 3 Queue Full -** Number of MSUs discarded because the level 2 to level 3 queue was full.	peg count
MSULOST2	**MSUs Discarded – Route On Hold Buffer Overflow -** Number of MSUs discarded because the routing buffer was in overflow.	peg count
MSULOST3	**MSUs Discarded – LS On Hold Buffer Overflow -** Number of MSUs discarded because the linkset-on-hold buffer was in overflow.	peg count
MSULOST4	**MSUs Discarded – Rcv Queue Full -** Number of MSUs discarded because the receive queue was full.	peg count
MSULOST5	**MSUs Discarded – LIM Init** - Number of MSUs discarded while the LIM card was initializing.	peg count
MTPRESTS	**MTP Restarts Initiated** - Number of times MTP restart was initiated by the STP. The count does not include the number of times MTP restart was initiated as a result of messages from adjacent nodes.	peg count
OMSINVDPC	**MSUs Originated – Invalid DPC** - Number of MSUs originated with an invalid DPC.	peg count
ORIGMSUS	**Originated MSUs** - The total number of outgoing MSUs successfully passed to MTP level 2 for transmission, while carrying the STP point code in the OPC field.	peg count
OVSZMSG	**Oversized MTP 3 Messages** - Oversized MTP 3 messages exceeding 272 octets (level 3) that are received by an HSL and are discarded.	peg count
STATUS	**Indication of Data Validity** - ***K*** indicates good data; ***I*** indicates incomplete interval; ***N*** indicates data not current.	status
THRSWMSU	**Through-Switched MSUs** - The total number of MSUs that did not carry the STP point code in the OPC or the DPC, and were successfully passed to MTP level 2 for transmission.	peg count
TRMDMSUS	**Terminated MSUs** - The total number of incoming MSUs carrying the STP point code in the DPC.	peg count

Table 4-38. Maintenance Day-to-Hour STP Measurements (Continued)

Event Name	Description	Unit
TTMAPPF	**Translation Type Mapping Translations Performed** - The total number of Translation Type Mapping translations performed (that is, a mapped SS7 message translation type was found for the existing SS7 message translation type).	peg count
XLXTELEI	**X-List Entry not Created** - The total number of times that an X-List entry was not created because the ELEI for the cluster was set to 'yes'.	peg count
XLXTSPACE	**X-List Entry not Created** - The total number of times an X-List entry was not created due to lack of space in the route/destination table.	peg count
MSUSCCPFLR	**MSU SCCP Failure** - Total MSUs discarded due to SCCP conversion failure.	peg count

OAM Example Output:

```
    tekelecstp 03-08-02 15:51:37 EST  EAGLE 34.0.3
    TYPE OF REPORT: DAY-TO-HOUR MAINTENANCE MEASUREMENTS ON STP
    REPORT PERIOD: LAST
    REPORT INTERVAL:  03-08-01,  00:00:00 THROUGH 23:59:59

    STP-MTCDTH MEASUREMENTS

    These measurements are from 03-08-01, 00:00:00 through 23:59:59.
    ORIGMSUS   =  36102314, TRMDMSUS   =         0, THRSWMSU   =   6055635,
    MTPRESTS   =         0, DTAMSULOST =         0, MSINVDPC   =         1,
    MSINVSIO   =         0, OMSINVDPC  =         0, MSINVLNK   =         0,
    MSINVSIF   =         0, MSNACDPC   =         1, MSINVSLC   =         0,
    GTTPERFD   =         0, GTTUN0NS   =         0, GTTUN1NT   =         0,
    MSSCCPFL   =         0, MSUDSCRD   =         0, MSULOST1   =         0,
    MSULOST2   =         0, MSULOST3   =         0, MSULOST4   =         0,
    MSULOST5   =         0, DRDCLFLR   =     86400, DURLKOTG   =     86400,
    CRSYSAL    =       288, MASYSAL    =       600, MISYSAL    =       960,
    XLXTSPACE  =         0, XLXTELEI   =         0, TTMAPPF    =         0,
    OVSZMSG    =         0, GFGTMATCH  =         0, GFGTNOMCH  =         0,
    GFGTNOLKUP =         0, MSUSCCPFLR =         0
;
    tekelecstp 03-08-02 15:51:39 EST  EAGLE5 34.0.0
    END OF ON-DEMAND STP-MTCDTH MEASUREMENT REPORT

;
```

MP Example Output File Name: **`mtcdth-stp_19990117_1500.csv`**

MP Example Output File Format:

```
"CLLI","SWREL","RPTDATE","RPTIME","TZ","RPTTYPE","RPTPD","IVALDATE",
"IVALSTART","IVALEND","NUMENTIDS"<cr><lf>
"tekelecstp","34.0.0-39.1.0","1999-01-17","15:51:37","EST",
"DAY-TO-HOUR MAINTENANCE MEASUREMENTS ON
STP","LAST","1999-01-17","00:00:00","15:00:00",1<cr><lf>
<cr><lf>
"STATUS","ORIGMSUS","TRMDMSUS","THRSWMSU","MTPRESTS","DTAMSULOST","MSINVDPC",
"MSINVSIO","OMSINVDPC","MSINVLNK","MSINVSIF","MSNACDPC","MSINVSLC","GTTPERFD",
"GTTUN0NS","GTTUN1NT","MSSCCPFL","MSULOST1","MSULOST2","MSULOST3","MSULOST4",
```

```
"MSULOST5","DRDCLFLR","DURLKOTG","CRSYSAL","MASYSAL","MISYSAL","XLXTSPACE",
"XLXTELEI","TTMAPPF","MSUDSCRD","OVSZMSG","GFGTMATCH","GFGTNOMCH","GFGTNOLKUP",
"MSUSCCPFLR"<cr><lf>
"K",36102314,0,6055635,0,0,1,0,0,0,0,1,0,0,0,0,0,0,0,0,0,0,0,0,0,0,86400,86400,
288,600,960,0,0,0,0,0<cr><lf>
```

Typical file size:

System header + Report header + Report data

250 + 405 + 220 = 875 bytes

enttype=link

Certain registers are reported for HSLs or LSLs only. Other registers have different interpretations for HSLs than for LSLs. These registers are summarized in Table 4-39.

Table 4-39. HSL LSL Differences for Maintenance Day-to-Hour Link Measurements

Event Name	LSL Usage	HSL Usage
DRBSYLNK	As described	N/A - not reported
NEGACKS	As described	N/A - not reported
SDURETRAN	N/A - not reported	As described
SURCVERR	Applies to FISU, LSSU, and MSUs	Applies to PDUs
TLNKACTV	As described	Time the link is active and giving MSUs to SAAL
NDCFLABN	As described	N/A - not reported
NDCFLXDA	Level 2 timer t7 expired	Timer NO_RESPONSE expired for POLL/STAT response
NDCFLXDC	Level 2 timer t6 expired	Timer NO_CREDIT expired
PCRN1N2EXC	As described	N/A - not reported
MSURETRN	As described	N/A - not reported
MSURCERR	As described	N/A - not reported
OCTRETRN	As described	N/A - not reported

Example Commands:

OAM: *rept-meas:type=mtcdth:enttype=link:loc=xxxx:link=x*

MP: *rept-ftp-meas:type=mtcdth:enttype=link*

Table 4-40. Maintenance Day-to-Hour Link Measurements

Event Name	Description	Unit
ACHGOVRS	**Number of Automatic Changeovers -** Number of times that a changeover procedure was used to divert traffic from one link to alternative links.	peg count
DRBSYLNK	**Cumulative Duration of Busy Link Status** - The total elapsed time between the receipt of a busy LSSU, and when the next message was acknowledged. This is the sum of all occurrences of busy link status.	seconds
DRDCLFLR	**Cumulative Duration of Signaling Link Declared Failures All Types -** The cumulative duration of all link failures.	seconds
DRFEPRO	**Duration of Far-End Processor Outage** - The cumulative duration that a link was unavailable to MTP level 3 because of a processor outage at the far-end network element (SIPO received).	seconds
DRLCLPRO	**Duration of Local Processor Outage** - The cumulative duration that a link was unavailable to MTP level 3 because of a processor outage at the near-end network element.	seconds
DRLKINHB	**Duration Link Inhibited -** The cumulative duration that a link was inhibited at the local or far-end network element.	seconds
ECCNGLV1	**Event Count for Entering Level 1 Link Congestion** - The total number of times that link congestion level 1 was entered.	peg count
ECCNGLV2	**Event Count for Entering Level 2 Link Congestion** - The total number of times that link congestion level 2 was entered.	peg count
ECCNGLV3	**Event Count for Entering Level 3 Link Congestion** - The total number of times that link congestion level 3 was entered.	peg count
FARMGINH	**Number of Far-End Management Inhibits** - Number of times a link was inhibited successfully from the far-end.	peg count
LNKAVAIL	**Link Available Time** - The total time the link was available to MTP level 3.	seconds
MSUDISC0	**Priority 0 MSUs Discarded Due to Congestion** - The total number of priority 0 MSUs discarded due to congestion (any level).	peg count
MSUDISC1	**Priority 1 MSUs Discarded Due to Congestion** - The total number of priority 1 MSUs discarded due to congestion (any level).	peg count
MSUDISC2	**Priority 2 MSUs Discarded Due to Congestion** - The total number of priority 2 MSUs discarded due to congestion (any level).	peg count

Table 4-40. Maintenance Day-to-Hour Link Measurements (Continued)

Event Name	Description	Unit
MSUDISC3	**Priority 3 MSUs Discarded Due to Congestion** - The total number of priority 3 MSUs discarded due to congestion (any level).	peg count
MSURCERR	**Number of Signal Units Received In Error** - Number of signal units received with checksum errors, indicating transmission errors.	peg count
MSURECVD	**MSUs Received** - Total number of MSUs received, including those for which retransmission has been requested.	peg count
MSURETRN	**MSUs Retransmitted** - Number of MSUs retransmitted because of errors.	peg count
MSUTRAN	**MSUs Transmitted -** Total number of MSUs transmitted to the far-end, including retransmissions.	peg count
NDCFLABN	**Number of Signaling Unit Failures** - Abnormal FIB/BSN - Number of times the signaling link was taken out-of-service because the STP received abnormal FIBs/BSNs. A count accumulates if two backward sequence number values in three consecutively received MSUs, or FISUs are not the same as the previous one, or any of the forward sequence numbers of the signal units in the retransmission buffer at the time they are retransmitted.	peg count
NDCFLXDA	**Number of Signaling Link Failures** - Excessive Delay of Acknowledgment - Number of times a signaling link was out-of-service due to an excessive delay in acknowledgments.	peg count
NDCFLXDC	**Number of Signaling Link Failures** - Excessive Duration of Congestion - Number of times a signaling link was out-of-service because the timer T6 (remote congestion) expired.	peg count
NDCFLXER	**Number of Signaling Link Failures** - Excessive Error Rate - Number of times a signaling link was out-of-service because it reached the signal unit error rate monitor (SUERM) threshold.	peg count
NEARMGIH	**Number of Near-End Management Inhibits -** Number of times a link was unavailable to MTP level 3 because it was locally inhibited.	peg count
NEGACKS	**Number of Negative Acknowledgments Received** - Number of times the BSN in an MSU was inverted, indicating a retransmission request.	peg count
NMLCLPRO	**Number of Local Processor Outages** - The total number of local processor outages in this STP.	peg count
NMDCLFLR	**Number of Signaling Link Declared Failures All Types** - The cumulative total of all link failures.	peg count
NMFEPRO	**Number of Far-End Processor Outages** - Number of far-end processor outages that have occurred.	peg count

Table 4-40. Maintenance Day-to-Hour Link Measurements (Continued)

Event Name	Description	Unit
OCTRECVD	**MSU Octets Received** - Total number of octets associated with MSUs received, including those removed for MTP level 2 processing and those for which retransmission has been requested.	octets
OCTRETRN	The number MSU octets retransmitted	peg count
OCTTRAN	**MSU Octets Transmitted** - Total number of octets associated with MSUs transmitted to the far-end, including those added in MTP level 2 processing and retransmissions.	octets
PCRN1N2EXC	**PCR N1 or N2 Count Exceeded** - The total number of forced retransmissions when preventive cyclic retransmission (PCR) is used a the error correction method on a link.	peg count
SDURETRN	**SSCOP SD PDUs Retransmitted** - The number of SSCOP SD PDUs that were retransmitted, based on an accumulated count of such retransmissions conveyed to layer management. This measurement replaces the MTP level 2 negative acknowledgements.	peg count
STATUS	**Indication of Data Validity** - ***K*** indicates good data; ***I*** indicates incomplete interval; ***N*** indicates data not current.	status
SURCVERR	**Number of Signal Units Received In Error** - Number of signal units received with checksum errors, indicating transmission errors.	peg count
TDCNGLV1	**Total Duration of Level 1 Link Congestion** - The total time the link was in level 1 congestion.	seconds
TDCNGLV2	**Total Duration of Level 2 Link Congestion** - The total time the link was in level 2 congestion.	seconds
TDCNGLV3	**Total Duration of Level 3 Link Congestion** - The total time the link was in level 3 congestion.	seconds
TLNKACTV	**Signaling Link Active Time** - The total time that the signaling link is in service and actively transmitting MSUs	seconds

OAM Example Output:

```
eagle10506 03-04-15 13:11:01 EST EAGLE 34.0.0
TYPE OF REPORT: DAY-TO-HOUR MAINTENANCE MEASUREMENTS ON LINK
REPORT PERIOD: LAST
REPORT INTERVAL:  03-04-15,  00:00:00 THROUGH 12:59:59

LINK-MTCDTH MEASUREMENTS: LOC: 1201, LINK: A  , LSN: lsn123

These measurements are from 03-04-15, 00:00:00 through 12:59:59.
MSUTRAN    =        95, MSURECVD   =        95, MSURETRN   =         0,
OCTRETRN   =         0, OCTTRAN    =      1900, OCTRECVD   =      1900,
TDCNGLV1   =         0, TDCNGLV2   =         0, TDCNGLV3   =         0,
ECCNGLV1   =         0, ECCNGLV2   =         0, ECCNGLV3   =         0,
MSUDISC0   =         0, MSUDISC1   =         0, MSUDISC2   =         0,
MSUDISC3   =         0, TLNKACTV   =         0, LNKAVAIL   =      3159,
```

```
    ACHGOVRS   =         0, NEARMGIH   =         0, FARMGINH   =         0,
    NMDCLFLR   =         0, DRDCLFLR   =         0, SURCVERR   =         0,
    NEGACKS    =         0, DRLKINHB   =         0, NDCFLABN   =         0,
    NDCFLXDA   =         0, NDCFLXER   =         0, NDCFLXDC   =         0,
    NMFEPRO    =         0, NMLCLPRO   =         0, DRFEPRO    =         0,
    DRLCLPRO   =         0, MSURCERR   =         0, DRBSYLNK   =         0,
    PCRN1N2EXC =         0
;
    eagle10506 03-04-15 13:11:02 EST EAGLE 34.0.0
    END OF ON-DEMAND LINK-MTCDTH MEASUREMENT REPORT
;
    eagle10506 03-04-15 13:11:17 EST EAGLE 34.0.0
    TYPE OF REPORT: DAY-TO-HOUR MAINTENANCE MEASUREMENTS ON LINK
    REPORT PERIOD: LAST
    REPORT INTERVAL:  03-04-15,  00:00:00 THROUGH 12:59:59

    LINK-MTCDTH MEASUREMENTS: LOC: 1204, LINK: A  , LSN: lsn123    (SAAL)

    These measurements are from 03-04-15, 00:00:00 through 12:59:59.
    MSUTRAN    =         0, MSURECVD   =         0, OCTTRAN    =         0,
    OCTRECVD   =         0, TDCNGLV1   =         0, TDCNGLV2   =         0,
    TDCNGLV3   =         0, ECCNGLV1   =         0, ECCNGLV2   =         0,
    ECCNGLV3   =         0, MSUDISC0   =         0, MSUDISC1   =         0,
    MSUDISC2   =         0, MSUDISC3   =         0, TLNKACTV   =         0,
    LNKAVAIL   =         0, ACHGOVRS   =         0, NEARMGIH   =         0,
    FARMGINH   =         0, NMDCLFLR   =         0, DRDCLFLR   =         0,
    SURCVERR   =         0, DRLKINHB   =         0, NDCFLXDA   =         0,
    NDCFLXER   =         0, NDCFLXDC   =         0, NMLCLPRO   =         0,
    DRLCLPRO   =         0, SDURETRN   =         0

;

    eagle10506 03-04-15 13:11:19 EST EAGLE 34.0.0
    END OF ON-DEMAND LINK-MTCDTH MEASUREMENT REPORT
;

    eagle10506 03-04-15 13:11:17 EST EAGLE 34.0.0
    TYPE OF REPORT: DAY-TO-HOUR MAINTENANCE MEASUREMENTS ON LINK
    REPORT PERIOD: LAST
    REPORT INTERVAL:  03-04-15,  00:00:00 THROUGH 12:59:59

    LINK-MTCDTH MEASUREMENTS: LOC: 1206, LINK: A  , LSN: lsn1234567   (SAAL)

    These measurements are from 03-04-15, 00:00:00 through 12:59:59.
    MSUTRAN    =         0, MSURECVD   =         0, OCTTRAN    =         0,
    OCTRECVD   =         0, TDCNGLV1   =         0, TDCNGLV2   =         0,
    TDCNGLV3   =         0, ECCNGLV1   =         0, ECCNGLV2   =         0,
    ECCNGLV3   =         0, MSUDISC0   =         0, MSUDISC1   =         0,
    MSUDISC2   =         0, MSUDISC3   =         0, TLNKACTV   =         0,
    LNKAVAIL   =         0, ACHGOVRS   =         0, NEARMGIH   =         0,
    FARMGINH   =         0, NMDCLFLR   =         0, DRDCLFLR   =         0,
    SURCVERR   =         0, DRLKINHB   =         0, NDCFLXDA   =         0,
    NDCFLXER   =         0, NDCFLXDC   =         0, NMLCLPRO   =         0,
    DRLCLPRO   =         0, SDURETRN   =         0

;

    eagle10506 03-04-15 13:11:19 EST EAGLE 34.0.0
    END OF ON-DEMAND LINK-MTCDTH MEASUREMENT REPORT
;
```

MP Example Output File Name: **mtcdth-link_19990117_1500.csv**

MP Example Output File Format:

```
"CLLI","SWREL","RPTDATE","RPTIME","TZ","RPTTYPE","RPTPD","IVALDATE",
"IVALSTART","IVALEND","NUMENTIDS"<cr><lf>
"tekelecstp","34.0.0-39.1.0","1999-01-17","15:51:37","EST",
"DAY-TO-HOUR MAINTENANCE MEASUREMENTS ON LINK","LAST",
"1999-01-17","00:00:00","15:00:00",500<cr><lf>
<cr><lf>
"STATUS","LSN","LOC","LINK","LNKTYPE","MSUTRAN","MSURECVD","MSURETRN","OCTRETRN",
"OCTTRAN","OCTRECVD","TDCNGLV1","TDCNGLV2","TDCNGLV3","ECCNGLV1","ECCNGLV2",
"ECCNGLV3","MSUDISC0","MSUDISC1","MSUDISC2","MSUDISC3","TLNKACTV","LNKAVAIL",
"ACHGOVRS","NEARMGIH","FARMGINH","NMDCLFLR","DRDCLFLR","SURCVERR","NEGACKS",
"DRLKINHB","NDCFLABN","NDCFLXDA","NDCFLXER","NDCFLXDC","NMFEPRO","NMLCLPRO",
"DRFEPRO","DRLCLPRO","MSURCERR","DRBSYLNK","PCRN1N2EXC","SDURETRN"<cr><lf>
"K","LS100","1201","A","MTP2",95,95,0,0,1900,1900,0,0,0,0,0,0,0,0,0,0,3159,0,0,0
,0,0,0,0,0,0,0,0,0,0,0,0,0,0,0,0,<cr><lf>

. . . . .

"K","LS101","3202","A","SAAL",0,0,,,0,0,0,0,0,0,0,0,0,0,0,0,0,0,0,0,0,0,0,,0,,0,
0,0,,0,,0,,,,0<cr><lf>
```

Assuming each data line will be:

4 char status + 9 char LSN + 6 char LOC + 4 char LINK +
7 char LKNTYPE + 38*(6 char data) + 2 = 260 chars

For a report of 500 links, the typical file size is:

System header + Report header + Report data

250 + 460 + 130000 = 130710 bytes

enttype=lnkset

Example Commands:

OAM: *rept-meas:type=mtcdth:enttype=lnkset:lsn=ayyyyyyy*

MP: *rept-ftp-meas:type=mtcdth:enttype=lnkset*

Table 4-41. Maintenance Day-to-Hour Linkset Measurements

Event Name	Description	Unit
STATUS	**Indication of Data Validity** - ***K*** indicates good data; ***I*** indicates incomplete interval; ***N*** indicates data not current.	status
ZTTMAPI	**Translation Type Mapping Translation Incoming** - The total number of Translation Type Mapping translations performed on incoming Message Signal Units (MSUs) for the specified linkset**.**	peg count
ZTTMAPO	**Translation Type Mapping Translation Outgoing** - The total number of Translation Type Mapping translations performed on outgoing Message Signal Units (MSUs) for the specified linkset.	peg count

OAM Example Output:

```
    tekelecstp 01-08-18 12:01:47 EST EAGLE 34.0.0
    TYPE OF REPORT: DAY-TO-HOUR MAINTENANCE MEASUREMENTS ON LINKSET
    REPORT PERIOD: LAST
    REPORT INTERVAL:  01-08-18,  00:00:00 THROUGH 11:59:59

    LNKSET-MTCDTH MEASUREMENTS: ls1201a

    These measurements are from 01-08-18, 00:00:00 through 11:59:59.
    ZTTMAPO    =    196611, ZTTMAPI    =         3

;

    tekelecstp 01-08-18 12:01:49 EST EAGLE 34.0.0
    END OF ON-DEMAND LNKSET-MTCDTH MEASUREMENT REPORT
;
```

MP Example Output File Name: **`mtcdth-lnkset_19990117_1500.csv`**

MP Example Output File Format:

```
"CLLI","SWREL","RPTDATE","RPTIME","TZ","RPTTYPE","RPTPD","IVALDATE",
"IVALSTART","IVALEND","NUMENTIDS"<cr><lf>
"tekelecstp","34.0.0-39.1.0","1999-01-17","15:51:37","EST",
"DAY-TO-HOUR MAINTENANCE MEASUREMENTS ON LINKSET","LAST",
"1999-01-17","00:00:00","15:00:00",500<cr><lf>
<cr><lf>
"STATUS","LSN","LNKTYPE","ZTTMAPO","ZTTMAPI"<cr><lf>
"K","ls100","SAAL",196611,3<cr><lf>

. . . . .

"K","ls600","MTP2",123456,98374<cr><lf>
```

Assuming each data line will be:

4 char status + 9 char LSN + 7 char LKNTYPE + 2*(6 char data) + 2 = 34 chars

For a report of 500 linksets, the typical file size is:

System header + Report header + Report data

250 + 47 + 17000 = 17297 bytes

enttype=stplan

NOTE: The peg counts for STPLAN measurements have the possibility of rolling over during periods of high STPLAN message transmit and receive. On the measurement reports, these measurements show up as negative numbers. This indicates STPLAN transmit and receive measurements have values greater than four gigabytes of data.

Example Commands:

OAM: *rept-meas:type=mtcdth:enttype=stplan*

MP: *rept-ftp-meas:type=mtcdth:enttype=stplan*

Table 4-42. Maintenance Day-to-Hour STPLAN Measurements

Event Name	Description	Unit
ENETALNERR	**Ethernet Alignment Error** - Number of packets not received over the STPLAN interface because of ethernet alignment errors.	peg count
ENETBUSBSY	**Ethernet Bus Busy** - Number of transmissions attempted when the STPLAN ethernet bus was busy.	peg count
ENETCOLERR	**Ethernet Collision Error** - Number of packets not transmitted by STPLAN because of excessive collisions on the STPLAN ethernet bus.	peg count
ENETCRCERR	**Ethernet CRC Error** - Number of packets not received on the STPLAN ethernet due to CRC errors.	peg count
ENETOCTRCV	**Ethernet Octets Received** - The total number of octets received on the STPLAN ethernet interface.	peg count
ENETOCTXMT	**Ethernet Octets Transmitted** - The total number of octets transmitted on the STPLAN ethernet interface.	peg count
ENETOVRERR	**Ethernet Receive Buffer Overflow Errors** - Number of packets not received by STPLAN because of a receive buffer overflow.	peg count
IPADDRERR	**IP Address Error**- The total number of inbound IP datagrams discarded on the STPLAN interface due to a bad destination address.	peg count
IPHDRERR	**IP Header Errors** - The total number of inbound IP datagrams discarded on the STPLAN interface due to header errors.	peg count
IPPROTERR	**IP Protocol Error** - Number of inbound IP datagrams discarded by STPLAN due to an error in the packet (invalid protocol).	peg count
SLANDISC1	**STPLAN Discarded 1** - Number of indicated messages not copied to the host due to the STPLAN feature being disabled.	peg count
SLANDISC2	**STPLAN Discarded 2** - Number of MSUs discarded due to the host being unreachable.	peg count
SLANDSBLD	**STPLAN Disabled** - The duration that the STPLAN screening/copy feature was disabled.	msecs
SLANSCRND	**STPLAN Screened** - Number of MSUs that were copied to the STPLAN interface after passing gateway screening.	peg count
SLANXMIT	**STPLAN Transmit** - Number of MSUs sent to the host destination.	peg count

Table 4-42. Maintenance Day-to-Hour STPLAN Measurements (Continued)

Event Name	Description	Unit
STATUS	**Indication of Data Validity** - ***K*** indicates good data; ***I*** indicates incomplete interval; ***N*** indicates data not current.	status
TCPCONNFLD	**TCP Connections Failed** - The total number of TCP connections that have failed on the STPLAN interface.	peg count
TCPRCVERR	**TCP Receive Error** - The total number of TCP segments received on the STPLAN interface in error.	peg count
TCPRSTSENT	**TCP Reset Sent** - The total number of TCP segments sent containing the reset (RST) flag on the STPLAN interface.	peg count
TCPSEGRCVD	**TCP Segment Received** - The total number of TCP segments received on the STPLAN interface.	peg count
TCPSEGSENT	**TCP Segment Sent** - The total number of TCP segments sent on the STPLAN interface.	peg count
TCPSEGXMT2	**TCP Segment Retransmitted** - The total number of TCP segments retransmitted on the STPLAN interface.	peg count

OAM Example Output:

```
    tekelecstp 01-08-18 00:00:21 EST EAGLE 34.0.0
    TYPE OF REPORT: DAY-TO-HOUR MAINTENANCE MEASUREMENTS ON STPLAN
    REPORT PERIOD: LAST
    REPORT INTERVAL:  01-08-17  00:00:00 THRU 23:59:59

    STPLAN-MTCD MEASUREMENTS

    SLANDSBLD  =         0, SLANDISC1  =         0, SLANDISC2  =         0,
    SLANSCRND  =         0, SLANXMIT   =         0, ENETALNERR =         0,
    ENETCRCERR =         0, ENETCOLERR =         0, ENETBUSBSY =         0,
    ENETOVRERR =         0, ENETOCTXMT =         0, ENETOCTRCV =         0,
    TCPCONNFLD =         0, TCPSEGRCVD =         0, TCPSEGSENT =         0,
    TCPSEGXMT2 =         0, TCPRCVERR  =         0, TCPRSTSENT =         0,
    IPHDRERR   =         0, IPADDRERR  =         0, IPPROTERR  =         0

;

    tekelecstp 01-08-18 00:00:22 EST EAGLE 34.0.0
    END OF ON-DEMAND STPLAN-MTCDTH MEASUREMENT REPORT
;
```

MP Example Output File Name: **`mtcdth-stplan_19990117_1500.csv`**

MP Example Output File Format:

```
"CLLI","SWREL","RPTDATE","RPTIME","TZ","RPTTYPE","RPTPD","IVALDATE",
"IVALSTART","IVALEND","NUMENTIDS"<cr><lf>
"tekelecstp","34.0.0-39.1.0","1999-01-17","15:51:37","EST",
"DAY-TO-HOUR MAINTENANCE MEASUREMENTS ON STPLAN","LAST",
"1999-01-17","00:00:00","15:00:00",1<cr><lf>
<cr><lf>
"STATUS","SLANDSBLD","SLANDISC1","SLANDISC2","SLANSCRND","SLANXMIT","ENETALNERR",
"ENETCRCERR","ENETCOLERR","ENETBUSBSY","ENETOVRERR","ENETOCTXMT","ENETOCTRCV",
```

```
"TCPCONNFLD","TCPSEGRCVD","TCPSEGSENT","TCPSEGXMT2","TCPRCVERR","TCPRSTSENT",
"IPHDRERR","IPADDRERR","IPPROTERR"<cr><lf>
"K",0,0,0,0,0,0,0,0,0,0,0,0,0,0,0,0,0,0,0,0<cr><lf>
```

Typical file size is:

System header	+ Report header	+ Report data		
250	+ 282	+ 260	=	792 bytes

Hourly Maintenance Measurements

The Maintenance Hour (MTCH) report provides the value of various maintenance measurements accumulated during a specific hour.

Entity Types: LNP, NP, EIR, and MAPSCRN

Accumulation Interval: 60 minutes

STP Retention Period: 24 hours

Reporting Modes: On-demand, Scheduled (MP only)

Accessible Collection Periods: Last, Specific

enttype=lnp

The enttype=lnp entity generates four separate reports per period. These reports for OAM based measurements are generated to CSV files in the FTA. The command example will generate the following hourly reports:

- Hourly LNP System Wide Measurements
- Hourly LNP Measurements Per SSP
- Hourly LNP Measurements Per LRN
- Hourly LNP Measurements Per NPA

All the OAM reports are listed together as are the MP reports.

Example Commands:

OAM: *rept-meas:type=mtch:enttye=lnp:period=last*

MP: *rept-ftp-meas:type=mtch:enttype=lnp:period=last*

Table 4-43. Hourly Maintenance LNP System Wide Measurements

Event Name	Description	Unit
LNPQRCV	*Trigger Based* The total number of queries received by LNPQS.	peg count
	Triggerless Number of encapsulated IAM messages received by LNPQS	peg count
LNPQDSC	*Trigger Based* The number of invalid queries that are discarded because no reply can be generated.	peg count
	Triggerless All invalid IAM messages are routed without LNP; LNPQTCPE is pegged.	not applicable
LNPQTCPE	*Trigger Based* The number of error replies with TCAP error codes.	peg count
	Triggerless The number of invalid encapsulated IAM messages received by LNPQS. Note that these messages are routed to their destinations with no LNP lookup.	peg count
LNPSREP	*Trigger Based* The number of successful replies.	peg count
	Triggerless The number of successful IAM messages.	peg count
LNPQUNPA	*Trigger Based* The number of correct queries received for non-ported DN when NPA-NXX is not provisioned.	peg count
	Triggerless The number of correct encapsulated IAM messages received for a non-ported DN, when the NPA-NXX is not provisioned.	peg count
STATUS	**Indication of Data Validity** - ***K*** indicates good data; ***I*** indicates incomplete interval; ***N*** indicates data not current.	status

Table 4-44. Hourly Maintenance LNP Per SSP Measurements

Event Name	Description	Unit
SSPQRCV	*Trigger Based* Number of correct queries received per originating SSP.	peg count
	Triggerless The number of correct encapsulated IAM messages received by LNPQS per OPC.	peg count

Table 4-44. Hourly Maintenance LNP Per SSP Measurements (Continued)

Event Name	Description	Unit
CLASSGTRQ	Number of valid CLASS GTT received per originating SSP.	peg count
LIDBGTRQ	Number of valid LIDB GTT received per originating SSP.	peg count
SSPQRCVP	Number of correct queries received for ported TNs, per originating SSP.	peg count
SSPQRCVNP	Number of correct queries received for non-ported TNs, per originating SSP.	peg count
CLASSGTRQP	Number of CLASS Global Title Translations received for ported TNs, per originating SSP.	peg count
CLASSGTRQNP	Number of CLASS Global Title Translations received for non-ported TNs, per originating SSP.	peg count
LIDBGTRQP	Number of LIDB Global Title Translations received for ported TNs, per originating SSP.	peg count
LIDBGTRQNP	Number of LIDB Global Title Translations received for non-ported TNs, per originating SSP.	peg count
CNAMGTRQP	Number of CNAM Global Title Translations received for ported TNs, per originating SSP.	peg count
CNAMGTRQNP	Number of CNAM Global Title Translations received for non-ported TNs, per originating SSP.	peg count
ISVMGTRQP	Number of ISVM Global Title Translations received for ported TNs, per originating SSP.	peg count
ISVMGTRQNP	Number of ISVM Global Title Translations received for non-ported TNs, per originating SSP.	peg count
WSMSCGTP	Number of WSMSC Global Title Translations received for ported TNs, per originating SSP	peg count
WSMSCGTNP	Number of WSMSC Global Title Translations received for non-ported TNs, per originating SSP	peg count
STATUS	**Indication of Data Validity** - ***K*** indicates good data; ***I*** indicates incomplete interval; ***N*** indicates data not current.	status

The following equations apply:

SSPQRCV = SSPQRCVP + SSPQRCVNP

CLASSGTRQ = CLASSGTRQP + CLASSGTRQNP

LIDBGTRQ = LIDBGTRQP + LIDBGTRQNP

Table 4-45. Hourly Maintenance LNP LRN Measurements

Event Name	Description	Unit
LRNQRCV	*Trigger Based* The number of correct queries received per LRN.	peg count
	Triggerless The number of correct encapsulated IAM messages received per LRN.	peg count
STATUS	**Indication of Data Validity** - ***K*** indicates good data; ***I*** indicates incomplete interval; ***N*** indicates data not current.	status

Table 4-46. Hourly Maintenance LNP NPA Measurements

Event Name	Description	Unit
NPAQRCV	The number of correct queries received per NPANXX for non-ported DN.	peg count
STATUS	**Indication of Data Validity** - ***K*** indicates good data; ***I*** indicates incomplete interval; ***N*** indicates data not current.	status

Hourly LNP System Wide Measurements

OAM Example Output File Name: **M60_LNP.csv**

OAM Example Output File Format:

```
"tekelecstp 01-08-02 15:51:37 EST EAGLE 34.0.0 "<cr><lf>
"TYPE OF REPORT: HOURLY MAINTENANCE MEASUREMENTS ON LNP SYSTEM"<cr><lf>
"REPORT PERIOD: LAST"<cr><lf>
"REPORT INTERVAL:  01-08-02,  00:00:00 THROUGH 23:59:59 "<cr><lf>
<cr><lf>
"LNPQRCV","LNPQDSC","LNPQTCPE","LNPSREP","LNPQUNPA"<cr><lf>
4294967295,4294967295,4294967295,4294967295,4294967295<cr><lf>
```

Hourly LNP Measurements Per SSP

OAM Example output File Name: **M60_SSP.csv**

OAM Example Output File Format:

```
"tekelecstp 99-01-02 15:51:37 EST EAGLE 34.0.0 "<cr><lf>
"TYPE OF REPORT: HOURLY MAINTENANCE MEASUREMENTS ON LNP SSP"<cr><lf>
"REPORT PERIOD: LAST"<cr><lf>
"REPORT INTERVAL:  99-01-01,  00:00:00 THROUGH 23:59:59 "<cr><lf>
```

```
"NUMBER OF ENTIDS: 2"<cr><lf>
<cr><lf>
"SSP","SSPQRCV","CLASSGTRQ","LIDBGTRQ""SSPQRCVP","SSPQRCVNP","CLASSGTP",
"CLASSGTNP","LIDBGTP","LIDBGTNP","CNAMGTP","CNAMGTNP","ISVMGTP","ISVMGTNP",
"WSMSCGTP","WSMSCGTNP" <cr><lf>
"002-002-100",123456789,456789,99999,123456789,456789,99999,
123456789,456789,99999,123456789,456789,99999,123456789,456789,99999<cr><lf>
"002-002-123",123456789,456789,99999,123456789,456789,99999,
123456789,456789,99999,123456789,456789,99999,123456789,456789,99999<cr><lf>
```

Hourly LNP Measurements Per LRN

OAM Example Output File Name: **M60_LRN.csv**

OAM Example Output File Format:

```
"tekelecstp 97-01-02 15:51:37 EST EAGLE 34.0.0 "<cr><lf>
"TYPE OF REPORT: HOURLY MAINTENANCE MEASUREMENTS ON LNP LRN"<cr><lf>
"REPORT PERIOD: LAST"<cr><lf>
"REPORT INTERVAL:  97-01-01,  00:00:00 THROUGH 23:59:59 "<cr><lf>
"NUMBER OF ENTIDS: 6"<cr><lf>
<cr><lf>
"LRN","LRNQRCV"<cr><lf>
9194560000,123456789<cr><lf>
4087550001,23456789<cr><lf>
5155550000,456789<cr><lf>
3022330001,345<cr><lf>
7032110002,99999<cr><lf>
8123048059,4294967295<cr><lf>
```

Hourly LNP Measurements Per NPA

OAM Example Output File Name: **M60_NPA.csv**

OAM Example Output File Format:

```
"tekelecstp 97-01-02 15:51:37 EST EAGLE 34.0.0 "<cr><lf>
"TYPE OF REPORT: HOURLY MAINTENANCE MEASUREMENTS ON LNP NPXNXX"<cr><lf>
"REPORT PERIOD: LAST"<cr><lf>
"REPORT INTERVAL:  97-01-01,  00:00:00 THROUGH 23:59:59 "<cr><lf>
"NUMBER OF ENTIDS: 6"<cr><lf>
<cr><lf>
"NPANXX","NPAQRCV"<cr><lf>
919456,123456789<cr><lf>
408755,23456789<cr><lf>
515555,456789<cr><lf>
302233,345<cr><lf>
703211,99999<cr><lf>
812304,4294967295<cr><lf>
```

Hourly LNP System Wide Measurements

MP Example Output File Name: **mtch-lnp_19990116_2400.csv**

MP Example Output File Format:

```
"CLLI","SWREL","RPTDATE","RPTIME","TZ","RPTTYPE","RPTPD","IVALDATE",
"IVALSTART","IVALEND","NUMENTIDS"<cr><lf>
"tekelecstp","34.0.0-39.1.0","1999-01-17","15:51:37","EST",
"HOURLY MAINTENANCE MEASUREMENTS ON LNP SYSTEM","LAST",
"1999-01-16","00:00:00","24:00:00",1<cr><lf>
<cr><lf>
```

```
"STATUS","LNPQRCV","LNPQDSC","LNPQTCPE","LNPSREP","LNPQUNPA"<cr><lf>
"K",429496729,429496729,429496729,429496729,429496729<cr><lf>
```

Typical file size is:

System header + Report header + Report data

250 + 63 + 34 = 347 bytes

Hourly LNP Measurements Per SSP

MP Example Output File Name: **mtch-ssp_19990116_2400.csv**

MP Example Output File Format:

```
"CLLI","SWREL","RPTDATE","RPTIME","TZ","RPTTYPE","RPTPD","IVALDATE","IVALSTART","I
VALEND","NUMENTIDS"<cr><lf>
"tekelecstp","34.0.0-39.1.0","1999-01-17","15:51:37","EST",
"HOURLY MAINTENANCE MEASUREMENTS ON LNP
SSP","LAST","1999-01-16","00:00:00","24:00:00",200<cr><lf>
<cr><lf>
"STATUS","SSP","SSPQRCV","CLASSGTRQ","LIDBGTRQ","SSPQRCVP","SSPQRCVNP","CLASSGTRQP
","CLASSGTRQNP","LIDBGTRQP","LIDBGTRQNP","CNAMGTRQP","CNAMGTRQNP","ISVMGTRQP",
"ISVMGTRQNP","WSMSCGTP","WSMSCGTNP"<cr><lf>
"K","002-002-100",123456789,456789,99999,123456789,456789,99999,123456789,456789,
99999,123456789,456789,99999,123456789,456789,99999<cr><lf>

. . . . .

"K","002-005-123",123456789,456789,99999,123456789,456789,99999,123456789,456789,
99999,123456789,456789,99999,123456789,456789,99999<cr><lf>
```

Assuming each data line will be:

4 char status + 14 char SSP + 15*(6 char data) + 2 = 110 chars

For a report of 200 SSPs, the typical file size is:

System header + Report header + Report data

250 + 160 + 22000 = 22410 bytes

Hourly LNP Measurements Per LRN

MP Example Output File Name: **mtch-lrn_19990116_2400.csv**

MP Example Output File Format:

```
"CLLI","SWREL","RPTDATE","RPTIME","TZ","RPTTYPE","RPTPD","IVALDATE",
"IVALSTART","IVALEND","NUMENTIDS"<cr><lf>
"tekelecstp","34.0.0-39.1.0","1999-01-17","15:51:37","EST",
"HOURLY MAINTENANCE MEASUREMENTS ON LNP
LRN","LAST","1999-01-16","00:00:00","24:00:00",600<cr><lf>
<cr><lf>
"STATUS","LRN","LRNQRCV"<cr><lf>
"K",9194560000,123456789<cr><lf>
"K",4087550001,23456789<cr><lf>
"K",5155550000,456789<cr><lf>

. . . . .
```

```
"K",3022330001,345<cr><lf>
"K",7032110002,99999<cr><lf>
"K",8123048059,4294967295<cr><lf>
```

Assuming each data line will be:

4 char status + 11 char LRN + 6 char data + 2 = 23 chars

For a report of 600 LRNs, the typical file size is:

System header	+ Report header	+ Report data		
250	+ 27	+ 13800	=	14077 bytes

Hourly LNP Measurements Per NPA

MP Example Output File Name: **`mtch-npa_19990116_2400.csv`**

MP Example Output File Format:

```
"CLLI","SWREL","RPTDATE","RPTIME","TZ","RPTTYPE","RPTPD","IVALDATE",
"IVALSTART","IVALEND","NUMENTIDS"<cr><lf>
"tekelecstp","34.0.0-39.1.0","1999-01-17","15:51:37","EST",
"HOURLY MAINTENANCE MEASUREMENTS ON LNP NPANXX","LAST",
"1999-01-16","00:00:00","24:00:00",600<cr><lf>
<cr><lf>
"STATUS","NPANXX","NPAQRCV"<cr><lf>
"K",919456,123456789<cr><lf>
"K",408755,23456789<cr><lf>
"K",515555,456789<cr><lf>

. . . . .

"K",302233,345<cr><lf>
"K",703211,99999<cr><lf>
"K",812304,4294967295<cr><lf>
```

Assuming each data line will be:

4 char status + 7 char NPANXX + 6 char data + 2 = 19 chars

For a report of 600 LRNs, the typical file size is:

System header	+ Report header	+ Report data		
250	+ 30	+ 11400	=	11680 bytes

enttype=np

The enttype=np entity generates two separate reports per period. These reports for OAM based measurements are generated to CSV files in the FTA. The command example will generate the following daily reports:

- Hourly INP and G-Port System Wide Measurements
- Hourly INP and G-Port Measurements Per SSP

All the OAM reports are listed together as are the MP reports.

Example Commands:

OAM: *rept-meas:type=mtch:enttype=np*

MP: *rept-ftp-meas:type=mtch:enttype=np*

Table 4-47. Hourly Maintenance INP and G-Port System Wide Measurements

Event Name	Description	Unit
INPQRCV	Number of total queries received by INPQS.	peg count
INPQDSC	Number of invalid queries that are discarded as no reply can be generated.	peg count
INPQTCPE	Number of error replies with TCAP error code.	peg count
INPSREP	Number of successful replies to INP non-queried queries. These replies will be either INP Connect or INP Continue.	peg count
GPSRRCV	Number of call related (SRI-Send Routing Information) messages received.	peg count
GPSRGTT	Number of call related (SRI-Send Routing Information) messages that fell through to GTT.	peg count
GPSRREP	Number of call related (SRI-Send Routing Information) messages that received G-Port service.	peg count
GPSRERR	Number of call related messages that cause an error response message (SRI-Send Routing Information NEGATIVE ACK).	peg count
GPNOCL	Number of non-call related messages relayed by G-Port.	peg count
GPNOCLGT	Number of non-call related messages that fell through to GTT.	peg count
IS41LRERR	Number of IS-41 location request - error response messages sent.	peg count
IS41LRMRCV	Number of IS-41 location request messages received.	peg count
IS41LRRTRN	Number of IS-41 location request - return result messages sent.	peg count
STATUS	**Indication of Data Validity** - ***K*** indicates good data; ***I*** indicates incomplete interval; ***N*** indicates data not current.	status

The following equations apply:

INPQRCV = INPQDSC + INPQTCPE + INPSREP

GPSRRCV = GPSRGTT + GPSRREP + GPSRERR

Table 4-48. Hourly Maintenance INP and G-Port Per SSP Measurements

Event Name	Description	Unit
INPQSCONN	Number of non-errored QS messages with QS Connect responses, per originating SSP.	peg count
INPQSCONT	Number of non-errored QS messages with QS Continue responses, per originating SSP.	peg count
INPMRTR	Number of messages sent to MR service that receive MR translation, per originating SSP.	peg count
INPMRGTT	Number of messages sent to MR service that fall through to GTT, per originating SSP.	peg count
GPSRACK	Number of call related (SRI-Send Routing Information ACK) responses.	peg count
GPSRRLY	Number of call related (SRI-Send Routing Information) messages relayed.	peg count
GPNOCL	Number of non-call related messages relayed by G-Port.	peg count
GPNOCLGT	Number of non-call related messages that fell through to GTT.	peg count
STATUS	**Indication of Data Validity** - ***K*** indicates good data; ***I*** indicates incomplete interval; ***N*** indicates data not current.	status

The following equation applies:

GPSRREP = ∑GPSRACK + ∑GPSRRLY

Hourly INP and G-Port System Wide Measurements When INP=ON and GPORT=ON

OAM Example Output File Name: **M60_NP.csv**

OAM Example Output File Format:

```
"tekelecstp 97-01-02 15:51:37 EST EAGLE 34.0.0 "<cr><lf>
"TYPE OF REPORT: HOURLY MAINTENANCE MEASUREMENTS ON NP SYSTEM"<cr><lf>
"REPORT PERIOD: LAST"<cr><lf>
"REPORT INTERVAL:  97-01-01,  00:00:00 THROUGH 23:59:59 "<cr><lf>
<cr><lf>

"INPQRCV","INPQDSC","INPQTCPE","INPSREP","GPSRRCV","GPSRGTT","GPSRREP",
"GPSRERR","GPNOCL","GPNOCLGT","IS41LRERR","IS41LRMRCV","IS41LRRTRN"<cr><lf>
4294967295,4294967295,4294967295,4294967295,4294967295,4294967295,4294967295,
4294967295,4294967295,4294967295<cr><lf>
```

Hourly INP and G-Port Measurements Per SSP When INP=ON and GPORT=ON

OAM Example output File Name: **M60_SSP.csv**

OAM Example Output File Format:

```
"tekelecstp 97-01-02 15:51:37 EST EAGLE 34.0.0 "<cr><lf>
"TYPE OF REPORT: HOURLY MAINTENANCE MEASUREMENTS ON NP  SSP"<cr><lf>
"REPORT PERIOD: LAST"<cr><lf>
"REPORT INTERVAL:  97-01-01,  00:00:00 THROUGH 23:59:59 "<cr><lf>
<cr><lf>

"INPQSCONN","INPQSCONT","INPMRTR","INPMRGTT","GPSRACK","GPSRRLY","GPNOCL",
"GPNOCLGT"<cr><lf>
4294967295,429495,4294967295,429495,4294967295,429495,4294967295,429495<cr><lf>
```

Hourly INP and G-Port System Wide Measurements When INP=ON and GPORT=ON

MP Example Output File Name: **`mtch-np_19990116_2400.csv`**

MP Example Output File Format:

```
"CLLI","SWREL","RPTDATE","RPTIME","TZ","RPTTYPE","RPTPD","IVALDATE",
"IVALSTART","IVALEND","NUMENTIDS"<cr><lf>
"tekelecstp","34.0.0-39.1.0","1999-01-17","15:51:37","EST",
"HOURLY MAINTENANCE MEASUREMENTS ON NP
SYSTEM","LAST","1999-01-16","00:00:00","24:00:00",1<cr><lf>
<cr><lf>
"STATUS","INPQRCV","INPQDSC","INPQTCPE","INPSREP","GPSRRCV","GPSRGTT","GPSRREP",
"GPSRERR","GPNOCL","GPNOCLGT","IS41LRERR","IS41LRMRCV","IS41LRRTRN"<cr><lf>
"K",4294967295,4294967295,4294967295,4294967295,4294967295,4294967295,4294967295,
4294967295,4294967295,4294967295<cr><lf>
```

Typical file size is:

System header	+ Report header	+ Report data		
250	+ 113	+ 66	=	429 bytes

Hourly INP and G-Port Measurements Per SSP When INP=ON and GPORT=ON

MP Example Output File Name: **`mtch-ssp_19990116_2400.csv`**

MP Example Output File Format:

```
"CLLI","SWREL","RPTDATE","RPTIME","TZ","RPTTYPE","RPTPD","IVALDATE",
"IVALSTART","IVALEND","NUMENTIDS"<cr><lf>
"tekelecstp","34.0.0-39.1.0","1999-01-17","15:51:37","EST",
"HOURLY MAINTENANCE MEASUREMENTS ON NP
SSP","LAST","1999-01-16","00:00:00","24:00:00",1<cr><lf>
<cr><lf>
"STATUS",
"INPQSCONN","INPQSCONT","INPMRTR","INPMRGTT","GPSRACK","GPSRRLY","GPNOCL",
"GPNOCLGT"<cr><lf>
"K",4294967295,429495,4294967295,429495,4294967295,429495,4294967295,429495<cr><lf
>
```

Typical file size is:

System header	+ Report header	+ Report data		
250	+ 98	+ 54	=	402 bytes

enttype=eir

The EIR measurements specify the entity type EIR, and generate one report per period. The commands are specified with yy as a two-number abbreviation for any hour of a 24-hour day (00 through 23 for the hours 0000 through 2300). The retention period for hourly measurement records is 24 hours.

Example Commands:

MP:*rept-ftp-meas:type=mtch:enttype=eir[:hh=yy:period=specific]*

Table 4-49 lists the EIR events and their descriptions.

Table 4-49. Hourly Maintenance EIR Measurements

Event Name	Description	Unit
IMEIRCV	Total number of MAP_CHECK_IMEI messages received	peg count
WHITEIMEI	Total number of searches that resulted in a match with a “white listed” IMEI	peg count
GRAYIMEI	Total number of searches that resulted in a match with a “gray listed” IMEI	peg count
BLACKIMEI	Total number of searches that resulted in a match with a “black listed” IMEI	peg count
BLKALIMEI	Total number of searches that resulted in a match with a “black listed” IMEI, but were allowed due to IMSI Check match	peg count
BLKNALIMEI	Total number of searches that resulted in a match with a “black listed” IMEI, and the IMSI in the database did not match the IMSI in the message	peg count
UNKNIMEI	Total number of searches that resulted in a match with an “unknown” IMEI	peg count
NOMTCHIMEI	Total number of searches that resulted in no match in the database. **NOMTCHIMEI is pegged whenever an IMEI is not found in the database.**	peg count

The following equation applies:

IMEIRCV = WHITEIMEI + GRAYIMEI + UNKNIMEI

MP Example Output File Name: **`mtch-eir_20030818_2300.csv`**

MP Example Output File Format:

```
"CLLI","SWREL","RPTDATE","RPTIME","TZ","RPTTYPE","RPTPD","IVALDATE",
"IVALSTART","IVALEND","NUMENTIDS"<cr><lf>
"tekelecstp","34.0.0-51.1.0","2003-08-19","15:51:37","EST",
"HOURLY MAINTENANCE MEASUREMENTS ON EIR SYSTEM","LAST","2003-08-18",
"23:00:00","24:00:00",1<cr><lf>
<cr><lf>
"IMEIRCV","WHITEIMEI","GRAYIMEI","BLACKIMEI","BLKALIMEI","BLKNALIMEI","UNKNIMEI","
NOMTCHIMEI"<cr><lf>
```

```
4294967295,4294967295,4294967295,4294967295,4294967295,4294967295,4294967295,
4294967295<cr><lf>
```

Typical file size is:

System header + Report header + Report data

256 + 95 + 89 = 440 bytes

enttype=mapscrn

The enttype=mapscrn entity generates two separate reports per period.

The reports for OAM based measurements are generated to CSV files in the FTA. The command example generates the following hourly OAM-based measurement reports when the GSM MAP Screening feature is activated:

- Hourly MAP Screening System Wide Measurements
- Hourly MAP Screening Measurements Per Server

The command example will generate the following hourly MP-based measurement reports when the GSM MAP/Enhanced GSM MAP Screening feature is activated:

- Hourly MAP Screening System Wide Measurements
- Hourly MAP Screening Measurements Per Path

All the OAM reports are listed together as are the MP reports.

NOTE: When MTP MAP Screening is enabled and on, the registers in Table 4-50 and Table 4-53 include the sum total of MTP-routed and GTT-routed messages for the particular event.

Example Commands:

OAM: *rept-meas:type=mtch:enttype=mapscrn*

MP: *rept-ftp-meas:type=mtch:enttype=mapscrn*

Table 4-50. Hourly Maintenance MAP Screening System Wide Measurements

Event Name	Description	Unit
MSCRNPASS	Total number of messages that Passed MAP screening.	count
MSCRNRJNE	Total number of messages that got Rejected by MAP screening because an entry was not found in the MAP screening table (i.e. rejected as System wide MAP Opcode action is DISCARD).	count
MSCRNRJFP	Total number of messages that got Rejected by MAP screening due to forbidden parameters in the message.	count
MSCRNPAFP	Total number of messages that contained the forbidden parameter but were not rejected due to Screening action set as PASS.	count

Table 4-50. Hourly Maintenance MAP Screening System Wide Measurements (Continued)

Event Name	Description	Unit
MSCRNPANE	Total number of messages, where an entry was not found in the MAP screening table but the Message was not rejected as screening action was marked as PASS (i.e. not rejected as System wide MAP Opcode action is PASS)	count
MSCRNRJOP	Total number of message that got rejected as Message MAP Opcode was not found in the MAP Opcode table (system wide action - DISCARD for the non matching OPCODEs)	count
MSCRNDUP	Total number of messages that were selected by MAP Screening for the Duplicate screening action.	count
MSCRNFOR	Total number of messages thate were selected by MAP Screening for the Forward screening action.	count
MSCRNDAD	Total number of messages thate were selected by MAP Screening for the Duplicate and Discard screening action.	count
STATUS	**Indication of Data Validity** - ***K*** indicates good data; ***I*** indicates incomplete interval; ***N*** indicates data not current.	status

Server Entity Identification information in Table 4-51 is used to identify to which server the Maintenance MAP Screening Per Server Measurements are applicable.

Table 4-51. Server Entity Identification

Entity Name	Description
SERVER	The screened origination address of the calling party address (CGPA) assigned when the GSM MAP screen was entered.
NP	The screened number plan value (NPV) assigned to the server address when the GSM MAP screen was entered. This field is filled with the default identifier * if no value was assigned.
NAI	The screened nature of address value (NAIV) assigned to the server address when the GSM MAP screen was entered. This field is filled with the default identifier * if no value was assigned.
OPCODE	The operation code number assigned when the GSM MAP opcode was entered.
NOTE: Measurements do not report entries created for a range of addresses.	

Server Path Entity Identification information in Table 4-52 is used to clarify the path to which the Maintenance MAP Screening Per Path Measurements are applicable.

Table 4-52. Path Entity Identification

Entity Name	Description

PATH	The screened origination address of the calling party address (CGPA-NP-NAI), or a combination of screened destination address of the called party address (CDPA-NP-NAI) and the screened origination addresses assigned when the GSM MAP screen was entered.
	The possible fields within the path are delimited as follows to allow for efficient sorting:
	• When both the origination and destination addresses are present (as either single server entries or provisioned wildcard entries), the origination address is preceded by a carat (^) and the destination address is preceded by a "greater than" sign (>):
	`^CGPA-NP-NAI>CDPA-NP-NAI`
	• When only the origination address is present (occurs when the CDPA is a default wildcard), it is preceded by a "less than" sign (<):
	`<CGPA-NP-NAI`

CGPA	The calling party global title address assigned when the GSM MAP screen was entered. Any or all of the three fields (GTA, NP, NAI) can be filled with the identifier (*) if a wildcard value is assigned for that field. There is no default wildcard value for the CGPA.
CDPA	The called party global title address assigned when the GSM MAP screen was entered. Any or all of the three fields (GTA, NP, NAI) can be filled with the identifier (*) if a wildcard value is assigned for that field. If the CDPA value is not assigned, the default wildcard value, which is not printed, is assumed.
NP	The screened number plan value (NPV) assigned to the path address when the GSM MAP screen was entered. The identifier (*) is used to signify a wildcard NP.
NAI	The screened nature of address value (NAIV) assigned to the path address when the GSM MAP screen was entered. The identifier (*) is used to signify a wildcard NAI.
OPCODE	The operation code number assigned when the GSM MAP opcode was entered. The identifier (*) is used to signify a wildcard opcode.
NOTE: Measurements do not report entries created for a range of addresses. Measurements does not report default wildcard CDPA address in entries containing them. There can never be a default wildcard CGPA entry. All wildcard CGPA entries must be explicitly provisioned. There can never be an entry with only a CDPA path listed. The string formats were designed to allow efficient automated post processing of measurements reports. A brief note explaining the format is included in the report.	

Table 4-53. Hourly Maintenance MAP Screening Per Server Measurements

Event Name	Description	Unit
MSCRNPASS	Total number of messages that Passed MAP screening	count
MSCRNRJFP	Total number of messages that were Rejected by MAP screening due to forbidden parameters in the message.	count
MSCRNDUP	Total number of messages per server that were selected by MAP Screening for the Duplicate screening action.	count
MSCRNFOR	Total number of messages per server that were selected by MAP Screening for the Forward screening action.	count
MSCRNDAD	Total number of messages per server that were selected by MAP Screening for the Duplicate screening action.	count
MSCRNPAFP	Total number of messages that contained the forbidden parameter but were not rejected due to Screening action set as PASS.	count
STATUS	**Indication of Data Validity** - ***K*** indicates good data; ***I*** indicates incomplete interval; ***N*** indicates data not current.	status

Hourly MAP Screening System Wide Measurements

OAM Example Output File Name: **M60_MAP.csv**

OAM Example Output File Format:

```
"tekelecstp 97-01-02 15:51:37 EST EAGLE 34.0.0 "<cr><lf>
"TYPE OF REPORT: HOURLY MAINTENANCE MEASUREMENTS ON MAP Screening SYSTEM"<cr><lf>
"REPORT PERIOD: LAST"<cr><lf>
"REPORT INTERVAL:  00-04-01,  00:00:00 THROUGH 23:59:59 "<cr><lf>
<cr><lf>
"MSCRNPASS","MSCRNRJNE","MSCRNRJFP","MSCRNPAFP","MSCRNPANE","MSCRNRJOP","MSCRNDUP"
,"MSCRNFOR","MSCRNDAD"<cr><lf>
4294967295,4294967295,4294967295,4294967295,4294967295,4294967295,4294967295,
4294967295,4294967295<cr><lf>
```

Hourly MAP Screening Measurements Per Server

OAM Example output File Name: **M60_SERV.csv**

OAM Example Output File Format:

```
"tekelecstp 00-04-02 15:51:37 EST EAGLE 34.0.0-30.9.0 "<cr><lf>
"TYPE OF REPORT: HOURLY MAINTENANCE MEASUREMENTS ON MAP Screening Server"<cr><lf>
"REPORT PERIOD: LAST"<cr><lf>
"REPORT INTERVAL:  00-04-01,  00:00:00 THROUGH 23:59:59 "<cr><lf>
"NUMBER OF ENTIDS: 2"<cr><lf>
<cr><lf>
"SERVER-NP-NAI-OPCODE",
"MSCRNPASS","MSCRNRJFP","MSCRNDUP","MSCRNFOR","MSCRNDAD","MSCRNPAFP"<cr><lf>
"123456789012345-0-0-0",
1234567890,1234567890,1234567890,1234567890,1234567890,1234567890<cr><lf>
"098765432154321-15-127-1",
5555555555,6666666666,1234567890,1234567890,1234567890,1234567890<cr><lf>
"919468-*-*-255",
1234567890,1234567890,1234567890,1234567890,1234567890,1234567890<cr><lf>
```

Hourly MAP Screening System Wide Measurements

MP Example Output File Name: **`mtch-map_19990116_2400.csv`**

MP Example Output File Format:

```
"CLLI","SWREL","RPTDATE","RPTIME","TZ","RPTTYPE","RPTPD","IVALDATE",
"IVALSTART","IVALEND","NUMENTIDS"<cr><lf>
"tekelecstp","34.0.0-39.1.0","1999-01-17","15:51:37","EST",
"HOURLY MAINTENANCE MEASUREMENTS ON MAP SCREENING SYSTEM","LAST",
"1999-01-16","00:00:00","24:00:00",1<cr><lf>
<cr><lf>
"STATUS","MSCRNPASS","MSCRNRJOP","MSCRNRJNE","MSCRNRJFP","MSCRNPAFP","MSCRNPANE","
MSCRNFOR","MSCRNDUP","MSCRNDAD"<cr><lf>
"K",4294967295,4294967295,4294967295,4294967295,4294967295,4294967295,4294967295,4
294967295,4294967295<cr><lf>
```

Typical file size is:

System header	+ Report header	+ Report data		
250	+ 116	+ 60	=	426 bytes

Hourly MAP Screening Measurements Per Path

MP Example Output File Name: **`mtch-path_19990116_2400.csv`**

MP Example Output File Format:

```
"CLLI","SWREL","RPTDATE","RPTIME","TZ","RPTTYPE","RPTPD","IVALDATE",
"IVALSTART","IVALEND","NUMENTIDS"<cr><lf>
"tekelecstp","34.0.0-53.8.0","1999-01-17","15:51:37","EST",
"HOURLY MAINTENANCE MEASUREMENTS ON MAP SCREENING PATH","LAST",
"1999-01-16","00:00:00","24:00:00",2<cr><lf>
<cr><lf>
For a path containing CGPA only, PATH-OPCODE = <CGPA-NP-NAI-OPCODE<cr><lf>
For a path containing both CGPA and CDPA, PATH-OPCODE =
^CGPA-NP-NAI>CDPA-NP-NAI-OPCODE
<cr><lf>
"STATUS","PATH-OPCODE","MSCRNPASS","MSCRNRJFP","MSCRNFOR","MSCRNDUP", "MSCRNDAD",
"MSCRNPAFP"<cr><lf>
"K","<123456789012345-0-0-0",1234567890,1234567890,1234567890,1234567890,123456789
0, 1234567890<cr><lf>
"K","<919468-*-*-120",1234567890,1234567890,1234567890,1234567890,1234567890,12345
67890<cr><lf>
"K","^919468-5-63>919575-12-100-25",1234567890,1234567890,1234567890,1234567890,
1234567890,1234567890<cr><lf>
"K","^540992-14-45-125>919468-*-*-*",1234567890,1234567890,1234567890,1234567890,
1234567890,1234567890<cr><lf>
```

Assuming each data line will be:

4 char status + 40 char PATH-OPCODE + 5*(6 char data) + 2 = 76 chars

For a report of 20 paths, the typical file size is:

System header	+ Report header	+ Report data		
250	+ 244	+ 1640	=	2134 bytes

Gateway Measurements

The GTWY measurement report collects and reports gateway-related data from the STP. The gateway related data collected for this report is the network management and global title translation load on the EAGLE 5 ISS, and the source of this load. The level and source of pass through TCAP traffic is also collected. The MTP cards measure this data which is reported when requested.

Entity Types: STP, ORIGNI, ORIGNINC, LNKSET, LSDESTNI, LSORIGINI, and LSONISMT

Accumulation Interval: 30 minutes

Optional MP Accumulation Interval: Every 15 minutes

STP Retention Period: 24 hours

Reporting Mode: Scheduled, On-demand

Accessible Collection Period: Last, Specific

enttype=stp

Example Commands:

OAM: *rept-meas:type=gtwy:enttype=stp*

MP: *rept-ftp-meas:type=gtwy:enttype=stp*

Table 4-54. Gateway STP Measurements

Event Name	Description	Unit
GTTPFDIC	Number of Global Title Translations (GTTs) performed on messages received from an interconnecting network.	peg count
MSUDSCRD	Number of MSUs discarded due to screening failure.	peg count
MSURJOPC	Number of MSUs rejected due to screening - disallowed OPC.	peg count
MSURJDPC	Number of MSUs rejected due to screening - disallowed DPC.	peg count
MSURJSIO	Number of MSUs rejected due to screening - invalid service information octet (SIO).	peg count
MSURJCPA	Number of MSUs rejected due to screening - invalid calling party address.	peg count
MSURJAPC	Number of subsystem prohibited (SSP) and subsystem allowed (SSA) MSUs rejected due to screening - invalid affected point code.	peg count
MSURJPCS	Number of subsystem status test (SST) MSUs rejected due to screening - invalid affected point code and SSN.	peg count
MSURJDST	Number of MTP-NM MSUs rejected due to screening - invalid affected destination field.	peg count

Table 4-54. Gateway STP Measurements (Continued)

Event Name	Description	Unit
MSURJTT	Number of SCCP MSUs rejected due to screening - invalid translation type.	peg count
MSURJDSN	Number of SCCP MSUs rejected due to screening - disallowed DPC/SSN in called party address.	peg count
MSURJTFC	Number of transfer controlled (TFC) MSUs rejected due to screening - invalid affected destination field.	peg count
MSURJSRT	Number of signaling routeset test (SRST) MSUs rejected due to screening - invalid affected destination field.	peg count
STATUS	**Indication of Data Validity** - ***K*** indicates good data; ***I*** indicates incomplete interval; ***N*** indicates data not current.	status
TTMAPPF	Number of translation type mapping translations performed. For example, a mapped SS7 message translation type was found for the existing SS7 message translation type.	peg count

OAM Example Output:

```
    tekelecstp 03-12-19 12:51:24 EST EAGLE 34.0.0
    TYPE OF REPORT: GATEWAY MEASUREMENTS ON STP
    REPORT PERIOD: LAST
    REPORT INTERVAL:  03-12-19,  12:00:00 THROUGH 12:29:59

    STP-GTWY MEASUREMENTS

    These measurements are from 03-12-19, 12:00:00 through 12:29:59.
    TTMAPPF    =         0, GTTPFDIC   =         0, MSUDSCRD   =         0,
    MSURJOPC   =         0, MSURJDPC   =         0, MSURJSIO   =         0,
    MSURJCPA   =         0, MSURJAPC   =         0, MSURJPCS   =         0,
    MSURJDST   =         0, MSURJTT    =         0, MSURJDSN   =         0,
    MSURJTFC   =         0, MSURJSRT   =         0

;

    tekelecstp 03-12-19 12:51:26 EST EAGLE 34.0.0
    END OF ON-DEMAND STP-GTWY MEASUREMENT REPORT
;
```

MP Example Output File Name: **`gtwy-stp_19990117_1530.csv`**

MP Example Output File Format:

```
"CLLI","SWREL","RPTDATE","RPTIME","TZ","RPTTYPE","RPTPD","IVALDATE",
"IVALSTART","IVALEND","NUMENTIDS"<cr><lf>
"tekelecstp","34.0.0-39.1.0","1999-01-17","15:51:37","EST",
"GATEWAY MEASUREMENTS ON STP","LAST","1999-01-17","15:00:00","15:30:00",1<cr><lf>
<cr><lf>
"STATUS","TTMAPPF","GTTPFDIC","MSUDSCRD","MSURJOPC","MSURJDPC","MSURJSIO",
"MSURJCPA","MSURJAPC","MSURJPCS","MSURJDST","MSURJTT","MSURJDSN","MSURJTFC",
"MSURJSRT"<cr><lf>

"K",0,0,0,0,0,0,0,0,0,0,0,0,0,0<cr><lf>
```

Typical file size is:

System header + Report header + Report data

250 + 164 + 90 = 504 bytes

enttype=origni

Example Commands:

OAM: *rept-meas:type=gtwy:enttype=origni:ni=200*

MP: *rept-ftp-meas:type=gtwy:enttype=origni*

Table 4-55. Gateway ORIGNI Measurements

Event Name	Description	Unit
GTTPFDPC	Number of global title translations (GTTs) performed - result is a DPC of an interconnecting network.	peg count
GTTUNTT	Number of GTTs unable to perform on messages received from an interconnecting network - no translation table for the translation type.	peg count
GTTPFDIC	Number of GTTs performed on messages received from an interconnecting network.	peg count
GTTUNADR	Number of GTTs unable to perform on messages received from an interconnecting network - no translation for this address.	peg count
STATUS	**Indication of Data Validity** - ***K*** indicates good data; ***I*** indicates incomplete interval; ***N*** indicates data not current.	status

OAM Example Output:

```
    tekelecstp 03-12-19 12:31:12 EST EAGLE 34.0.0
    TYPE OF REPORT: GATEWAY MEASUREMENTS ON ORIGNI
    REPORT PERIOD: LAST
    REPORT INTERVAL:  03-12-19, 12:00:00 THROUGH 12:29:59

    ORIGNI-GTWY MEASUREMENTS: NI: 5

    These measurements are from 03-12-19, 12:00:00 through 12:29:59.
    GTTPFDPC   =         0, GTTUNTT    =         0, GTTPFDIC   =    834033,
    GTTUNADR   =    834034

;

    tekelecstp 03-12-19 12:31:13 EST EAGLE 34.0.0
    END OF ON-DEMAND ORIGNI-GTWY MEASUREMENT REPORT
;
```

MP Example Output File Name: **gtwy-origni_19990117_1530.csv**

MP Example Output File Format:

```
"CLLI","SWREL","RPTDATE","RPTIME","TZ","RPTTYPE","RPTPD","IVALDATE",
"IVALSTART","IVALEND","NUMENTIDS"<cr><lf>
"tekelecstp","34.0.0-39.1.0","1999-01-17","15:51:37","EST",
"GATEWAY MEASUREMENTS ON
ORIGNI","LAST","1999-01-17","15:00:00","15:30:00",100<cr><lf>
<cr><lf>
"STATUS","NI","GTTPFDPC","GTTUNTT","GTTPFDIC","GTTUNADR"<cr><lf>
"K",100,0,0,834033,834034<cr><lf>

. . . . .

"K",200,0,0,834033,834034<cr><lf>
```

Assuming each data line will be:

4 char status + 4 char NI + 4*(6 char data) + 2 = 34 chars

For a report of 100 NIs, typical file size is:

System header + Report header + Report data

250 + 59 + 3400 = 3709 bytes

enttype=origninc

Example Commands:

OAM: *rept-meas:type=gtwy:enttype=origninc:ni=4:nc=200*

MP: *rept-ftp-meas:type=gtwy:enttype=origninc*

Table 4-56. Gateway ORIGNINC Measurements

Event Name	Description	Unit
GTTPFDPC	Number of global title translations (GTTs) performed - result is a DPC of an interconnecting network.	peg count
GTTUNTT	Number of GTTs unable to perform on messages received from an interconnecting network - no translation table for the translation type.	peg count
GTTPFDIC	Number of GTTs performed on messages received from an interconnecting network.	peg count
GTTUNADR	Number of GTTs unable to perform on messages received from an interconnecting network - no translation for this address.	peg count
STATUS	**Indication of Data Validity** - ***K*** indicates good data; ***I*** indicates incomplete interval; ***N*** indicates data not current.	status

OAM Example Output:

```
    tekelecstp 03-12-19 12:31:37 EST EAGLE 34.0.0
    TYPE OF REPORT: GATEWAY MEASUREMENTS ON ORIGNINC
    REPORT PERIOD: LAST
    REPORT INTERVAL:  03-12-19, 12:00:00 THROUGH 12:29:59

    ORIGNINC-GTWY MEASUREMENTS: NI: 5, NC: 5

    These measurements are from 03-12-19, 12:00:00 through 12:29:59.
    GTTPFDPC   =         0, GTTUNTT    =         0, GTTPFDIC   =    834033,
    GTTUNADR   =    834034

;

    tekelecstp 03-12-19 12:31:38 EST EAGLE 34.0.0
    END OF ON-DEMAND ORIGNINC-GTWY MEASUREMENT REPORT
;
```

MP Example Output File Name: **`gtwy-orignic_19990117_1530.csv`**

MP Example Output File Format:

```
"CLLI","SWREL","RPTDATE","RPTIME","TZ","RPTTYPE","RPTPD","IVALDATE",
"IVALSTART","IVALEND","NUMENTIDS"<cr><lf>
"tekelecstp","34.0.0-39.1.0","1999-01-17","15:51:37","EST",
"GATEWAY MEASUREMENTS ON
ORIGNINC","LAST","1999-01-17","15:00:00","15:30:00",100<cr><lf>
<cr><lf>
"STATUS","NI","NC","GTTPFDPC","GTTUNTT","GTTPFDIC","GTTUNADR"<cr><lf>
"K",4,200,0,0,834033,834034<cr><lf>

. . . . .

"K",25,200,0,0,834033,834034<cr><lf>
```

Assuming each data line will be:

4 char status + 4 char NI + 4 char NC + 4*(6 char data) + 2 = 38 chars

For a report of 100 NI/NCs, the typical file size is:

System header + Report header + Report data

250 + 64 + 3800 = 4114 bytes

enttype=lnkset

NOTE: The determination of which linksets are included in this report is controlled by the state of the gtwylsfltr field in the measurement control table. By default, only gateway linksets are included. This can be changed with the *chg-meas:gtwylsfltr={ both | stp | seas | none }* command. See the *Commands Manual* for details on using this command.

Example Commands:

OAM: *rept-meas:type=gtwy:enttype=lnkset:lsn=ls1201a*

MP: *rept-ftp-meas:type=gtwy:enttype=lnkset*

Table 4-57. Gateway Linkset Measurements

Event Name	Description	Unit
TFPTRAN	The number of transfer prohibited (TFP) and transfer cluster prohibited (TCP) MSUs transmitted.	peg count
TFPRECD	The number of TFP and TCP MSUs received.	peg count
TFRTRAN	The number of transfer restricted (TFR) and transfer cluster restricted (TCR) MSUs transmitted.	peg count
TFRRECD	The number of TFR and TCR MSUs received.	peg count
TFATRAN	The number of transfer allowed (TFA) and transfer cluster allowed (TCA) MSUs transmitted.	peg count
TFARECD	The number of TFA and TCA MSUs received.	peg count
SRSTTRAN	The number of signaling routeset test (SRST) and cluster signaling routeset test (CSRST) MSUs transmitted.	peg count
SRSTRECD	The number of SRST and CSRST MSUs received.	peg count
SRSCTRAN	The number of signaling routeset congestion test (SRSCT) MSUs transmitted.	peg count
SRSCTRCD	The number of SRSCT MSUs received.	peg count
TSTMTRCD	The number of testing and maintenance (T&M) MSUs received.	peg count
SSPTRAN	The number of subsystem prohibited (SSP) MSUs transmitted.	peg count
SSPRECD	The number of SSP MSUs received.	peg count
SSATRAN	The number of subsystem allowed (SSA) MSUs transmitted.	peg count
SSARECD	The number of SSA MSUs received.	peg count
SSTTRAN	The number of subsystem status test (SST) MSUs transmitted.	peg count
SSTRECD	The number of SST MSUs received.	peg count
SLTRECD	The number of signaling link tests received.	peg count
STATUS	**Indication of Data Validity** - ***K*** indicates good data; ***I*** indicates incomplete interval; ***N*** indicates data not current.	status

OAM Example Output:

```
    tekelecstp 03-12-19 13:35:08 EST EAGLE 34.0.0
    TYPE OF REPORT: GATEWAY MEASUREMENTS ON LINKSET
    REPORT PERIOD: LAST
    REPORT INTERVAL:  03-12-19,  13:00:00 THROUGH 13:29:59

    LINKSET-GTWY MEASUREMENTS: ls1201

    These measurements are from 03-12-19, 13:00:00 through 13:29:59.
    TFPTRAN    =         0, TFPRECD    =         0, TFRTRAN    =         0,
    TFRRECD    =         0, TFATRAN    =         0, TFARECD    =         0,
    SRSTTRAN   =         0, SRSTRECD   =         0, SLTRECD    =         0,
    SRSCTRAN   =         0, SRSCRECD   =         0, TSTMTRCD   =         0,
    SSPTRAN    =         0, SSPRECD    =         0, SSATRAN    =         0,
    SSARECD    =         0, SSTTRAN    =         0, SSTRECD    =         0

;


    tekelecstp 03-12-19 13:35:10 EST EAGLE 34.0.0
    END OF ON-DEMAND LINKSET-GTWY MEASUREMENT REPORT
;
```

MP Example Output File Name: **`gtwy-lnkset_19990117_1530.csv`**

MP Example Output File Format:

```
"CLLI","SWREL","RPTDATE","RPTIME","TZ","RPTTYPE","RPTPD","IVALDATE",
"IVALSTART","IVALEND","NUMENTIDS"<cr><lf>
"tekelecstp","34.0.0-39.1.0","1999-01-17","15:51:37","EST",
"GATEWAY MEASUREMENTS ON
LINKSET","LAST","1999-01-17","15:00:00","15:30:00",600<cr><lf>
<cr><lf>
"STATUS","LSN","LNKTYPE","TFPTRAN","TFPRECD","TFRTRAN","TFRRECD","TFATRAN","TFAREC
D",
"SRSTTRAN","SRSTRECD","SLTRECD","SRSCTRAN","SRSCRECD","TSTMTRCD","SSPTRAN",
"SSPRECD","SSATRAN","SSARECD","SSTTRAN","SSTRECD"<cr><lf>
"K","ls1201","SAAL",0,0,0,0,0,0,0,0,0,0,0,0,0,0,0,0,0,0<cr><lf>

. . . . .

"K","ls5307","MTP2",0,0,0,0,0,0,0,0,0,0,0,0,0,0,0,0,0,0<cr><lf>
```

Assuming each data line will be:

4 char status + 8 char LSN + 7 char LNKTYPE + 18*(6 char data) + 2 = 129 chars

For a report of 600 linksets, typical file size is:

System header + Report header + Report data

250 + 214 + 77400 = 77864 bytes

enttype=lsdestni

NOTE: The determination of which linksets are included in this report is controlled by the state of the gtwylsfltr field in the measurement control table. By default, only gateway linksets are included. This can be changed with the *chg-meas:gtwylsfltr={ both | stp | seas | none }* command. See the *Commands Manual* for details on using this command.
The NI parameter is not part of the output for ITU GTWY linksets.

Example Commands:

OAM: *rept-meas:type=gtwy:enttype=lsdestni:lsn=ls1201:ni=5*

MP: *rept-ftp-meas:type=gtwy:enttype=lsdestni*

Table 4-58. Gateway LSDESTNI Measurements

Event Name	Description	Unit
MSURCVNA	The number of MSUs received from another network - not addressed to the BCC network.	peg count
OCTRCVNA	The number of MSU octets received from another network - not addressed to the BCC network.	octets
MSUTRNNA	The number of MSUs transmitted - addressed to a network other than the adjacent receiving network.	peg count
OCTTRNNA	The number of MSU octets transmitted - addressed to a network other than the adjacent receiving network.	octets
STATUS	**Indication of Data Validity** - ***K*** indicates good data; ***I*** indicates incomplete interval; ***N*** indicates data not current.	status
TFCGTRAN	The number transfer controlled (TFC) MSUs transmitted - originated by the gateway STP.	peg count

OAM Example Output:

```
    tekelecstp 03-12-19 12:30:16 EST EAGLE 34.0.0
    TYPE OF REPORT: GATEWAY MEASUREMENTS ON LSDESTNI
    REPORT PERIOD: LAST
    REPORT INTERVAL:  03-12-19,  12:00:00 THROUGH 12:29:59

    LSDESTNI-GTWY MEASUREMENTS: LSN: ls1201, NI: 5

    These measurements are from 03-12-19, 12:00:00 through 12:29:59.
    MSURCVNA   =   5040000, OCTRCVNA   =   201600K, MSUTRNNA   =    834033,
    OCTTRNNA   =  14757021, TFCGTRAN   =         0

;

    tekelecstp 03-12-19 12:30:18 EST EAGLE 34.0.0
    END OF ON-DEMAND LSDESTNI-GTWY MEASUREMENT REPORT
;
```

MP Example Output File Name: **gtwy-lsdestni_19990117_1530.csv**

MP Example Output File Format:

```
"CLLI","SWREL","RPTDATE","RPTIME","TZ","RPTTYPE","RPTPD","IVALDATE",
"IVALSTART","IVALEND","NUMENTIDS"<cr><lf>
"tekelecstp","34.0.0-39.1.0","1999-01-17","15:51:37","EST",
"GATEWAY MEASUREMENTS ON
LSDESTNI","LAST","1999-01-17","15:00:00","15:30:00",400<cr><lf>
<cr><lf>
"STATUS","LSN","LSTYPE","NI","MSURCVNA","OCTRCVNA","MSUTRNNA","OCTTRNNA","TFCGTRAN
"<cr><lf>
"K","ls1201","ANSI",5,5040000,201600K,834033,14757021,0<cr><lf>

. . . . .

"K","lsitu","ITU",,5040000,201600K,834033,14757021,0<cr><lf>
```

Assuming each data line will be:

4 char status + 8 char LSN + 6 char LSTYPE + 4 char NI + 5*(6 char data) + 2 = 54 chars

For a report of 400 LSDESTNIs, the typical file size is:

System header + Report header + Report data

250 + 86 + 21600 = 21936 bytes

enttype=lsorigni

NOTE: The determination of which linksets are included in this report is not controlled by the state of the gtwylsfltr field in the measurement control table. LSONISMT register MSUISPMT counts are rolled into the MSUDSCRD register. It is possible to have counts for MSUDSCRD, but no counts for any other registers in this report due to the MSUISPMT register count in the LSONISMT report.
The NI parameter is not part of the output for ITU GTWY linksets.

Example Commands:

OAM: *rept-meas:type=gtwy:enttype=lsorigni:lsn=ls1201a:ni=12*

MP: *rept-ftp-meas:type=gtwy:enttype=lsorigni*

Table 4-59. Gateway LSORGINI Measurements

Event Name	Description	Unit
TFCGRECD	The number of transfer controlled (TFC) MSUs received.	peg count
MSURJOPC	The number of MSUs rejected due to screening - disallowed OPC.	peg count
MSURJDPC	The number of MSUs rejected due to screening - disallowed DPC.	peg count
MSURJCPA	The number of MSUs rejected due to screening - invalid calling party address.	peg count

Table 4-59. Gateway LSORGINI Measurements (Continued)

Event Name	Description	Unit
MSURJAPC	The number of subsystem prohibited (SSP) and subsystem allowed (SSA) MSUs rejected due to screening - invalid affected point code.	peg count
MSURJPCS	The number of subsystem status test (SST) MSUs rejected due to screening - invalid affected point code and SSN.	peg count
MSURJHC	Number of MSUs discarded due to screening H0H1	peg count
MSURJTFC	The number of TFC MSUs rejected due to screening - invalid affected destination field.	peg count
MSURJSRT	The number of signaling routeset test (SRST) MSUs rejected due to screening - invalid affected destination field.	peg count
MSUDSCRD	The number of MSUs rejected due to screening failure.	peg count
MSURJSIO	The number of MSUs rejected due to screening - invalid service information octet (SIO).	peg count
MSURJDST	The number of MTP-NM MSUs rejected due to screening - invalid affected destination field.	peg count
MSURJTT	The number of SCCP MSUs rejected due to screening - invalid translation type.	peg count
MSURJDSN	The number of SCCP MSUs rejected due to screening - disallowed DPC/SSN.	peg count
STATUS	**Indication of Data Validity** - ***K*** indicates good data; ***I*** indicates incomplete interval; ***N*** indicates data not current.	status

OAM Example Output:

```
    tekelecstp 03-12-19 12:29:26 EST EAGLE 34.0.0
    TYPE OF REPORT: GATEWAY MEASUREMENTS ON LSORIGNI
    REPORT PERIOD: LAST
    REPORT INTERVAL:  03-12-19,  11:30:00 THROUGH 11:59:59

    LSORIGNI-GTWY MEASUREMENTS: LSN: ls1201, NI: 5

    These measurements are from 03-12-19, 11:30:00 through 11:59:59.
    TFCRECD    =         0, MSURJOPC   =    834033, MSURJDPC   =    834034,
    MSURJCPA   =  14757021, MSURJAPC   =  14757039, MSURJPCS   =         0,
    MSURJTFC   =         0, MSURJSRT   =         0, MSUDSCRD   =         0,
    MSURJSIO   =         0, MSURJDST   =         0, MSURJTT    =         0,
    MSURJDSN   =         0

;
    tekelecstp 03-12-19 12:29:27 EST EAGLE 34.0.0
    END OF ON-DEMAND LSORIGNI-GTWY MEASUREMENT REPORT
```

MP Example Output File Name: **`gtwy-lsorigni_19990117_1530.csv`**

```
"CLLI","SWREL","RPTDATE","RPTIME","TZ","RPTTYPE","RPTPD","IVALDATE",
"IVALSTART","IVALEND","NUMENTIDS"<cr><lf>
"tekelecstp","34.0.0-39.1.0","1999-01-17","15:51:37","EST",
```

```
"GATEWAY MEASUREMENTS ON
LSORIGNI","LAST","1999-01-17","15:00:00","15:30:00",400<cr><lf>
<cr><lf>
"STATUS","LSN","LSTYPE","NI","TFCGRECD","MSURJOPC","MSURJDPC","MSURJCPA","MSURJAPC
","MSURJPCS","MSURJHC","MSURJTFC","MSURJSRT","MSUDSCRD","MSURJSIO","MSURJDST",
"MSURJTT","MSURJDSN"<cr><lf>
"K","ls1201","ANSI",5,0,834033,834034,14757021,14757039,0,0,0,0,0,0,0,0,0<cr><lf>

. . . . .

"K","lsitu","ITU",,0,834033,834034,14757021,14757039,0,0,0,0,0,0,0,0,0<cr><lf>
```

Assuming each data line will be:

4 char status + 8 char LSN + 6 char LSTYPE + 4 char NI + 14*(6 char data) + 2 = 108 chars

For a report of 400 LSORIGNIs, typical file size is:

System header + Report header + Report data

250 + 173 + 43200 = 43623 bytes

enttype=lsonismt

NOTE: The determination of which linksets are included in this report is not controlled by the state of the gtwylsfltr field in the measurement control table. MSUISPMT counts are rolled into the MSUDSCRD register of the LSORIGNI and STP reports.
The NI parameter is not part of the output for ITU GTWY linksets.

Example Commands:

OAM: *rept-meas:type=gtwy:enttype=lsonismt:lsn=ls1201a:ni=43*

MP: *rept-ftp-meas:type=gtwy:enttype=lsonismt*

Table 4-60. Gateway LSONISMT Measurements

Event Name	Description	Unit
MSUISPMT	Number of ISDNUP MSUs rejected due to screening -- invalid ISUP message type	peg count

OAM Example Output:

```
tekelecstp 03-12-19 12:29:26 EST EAGLE 34.0.0
TYPE OF REPORT: GATEWAY MEASUREMENTS ON LSONISMT
REPORT PERIOD: LAST
REPORT INTERVAL:  02-12-19,  12:00:00 THROUGH 12:29:59

LSONISMT-GTWY MEASUREMENTS: LSN: ls1201a, NI: 43, ISMT: 6

These measurements are from 02-12-19, 12:00:00 through 12:29:59.
MSUISPMT   =     45397

;
```

```
    LSONISMT-GTWY MEASUREMENTS: LSN: ls1201a, NI: 43, ISMT: 7

    These measurements are from 02-12-19, 12:00:00 through 12:29:59.
    MSUISPMT   =     61423

;

    tekelecstp 02-12-19 12:41:21 EST EAGLE 34.0.0
    END OF ON-DEMAND LSONISMT-GTWY MEASUREMENT REPORT
;
```

MP Example Output File Name: **`gtwy-lsonismt_20021217_1530.csv`**

```
"CLLI","SWREL","RPTDATE","RPTIME","TZ","RPTTYPE","RPTPD","IVALDATE",
"IVALSTART","IVALEND","NUMENTIDS"<cr><lf>
"tekelecstp","30.0.0-48.1.0","2002-12-17","15:51:37","EST",
"GATEWAY MEASUREMENTS ON
LSONISMT","LAST","2002-12-17","15:00:00","15:30:00",400<cr><lf>
<cr><lf>
"STATUS","LSN","LSTYPE","NI","ISMT","MSUISPMT"<cr><lf>
"K","ls1201","ANSI",5,6,34033<cr><lf>

. . . . .

"K","lsitu","ITU",,7,57021<cr><lf>
```

Assuming each data line will be:

4 char status + 8 char LSN + 6 char LSTYPE + 4 char NI + 4 char ISMT + 1*(6 char data) + 2 = 34 chars

For a report of 400 LSONISMT, typical file size is:

System header	+ Report header	+ Report data		
250	+ 49	+ 13600	=	13899 bytes

Record Base Measurements

The RBASE measurements report various data related to the configuration or status of the EAGLE 5 ISS's major configurable components. The data in this measurement report is obtained from either the database or from maintenance tasks performed on the EAGLE 5 ISS. The data is not periodically collected and stored in the manner of other measurements data, but it is collected on demand when a RBASE measurement report is requested.

Entity Types: STP, Lnkset, and Link

Accumulation Interval: Snapshot

STP Retention Period: None

Reporting Mode: Scheduled-Polled (SEAS only), On-demand

Accessible Collection Period: Active

enttype=stp

Example Commands:

OAM: *rept-meas:type=rbase:enttype=stp*

MP: *rept-ftp-meas:type=rbase:enttype=stp*

Table 4-61. Record Base STP Measurements

Event Name	Description	Unit
BUSS	The number of IS-NR or IS-ANR IMT buses	peg count
CTSDLSST	The value of the SCCP Management: subsystem status test (SS7) delay timer (level 3 T32 timer). This value of this timer is fixed at 30 seconds and is not configurable.	seconds
LINKS	The number of configured signaling links.	peg count
LNKSETS	The number of configured linksets.	peg count
NT1TDCHO	The value of the delay to avoid mis-sequencing on changeover timer (level 3 T1 timer).	seconds
NT2CHOAK	The value of the waiting for changeover acknowledgment timer (level 3 T2 timer).	seconds
NT3TDCHB	The value of the delay to avoid mis-sequencing on changeback timer (level 3 T3 timer).	seconds
NT4CHBK1	The value of the waiting for changeover acknowledgment (first attempt) timer (level 3 T4 timer).	seconds
NT5CHBK2	The value of the waiting for changeover acknowledgment (second attempt) timer (level 3 T5 timer).	seconds
NT6TDCRR	The value of the delay to avoid mis-sequencing on controlled rerouting timer (level 3 T6 timer).	seconds
NT7SLKCN	The value of the waiting for signaling link connection acknowledgment timer (level 3 T7 timer).	seconds
NT8TRPRH	The value of the transfer prohibited inhibited timer (level 3 T8 timer).	seconds
NT10SRST	The value of the waiting to repeat signaling routeset test timer (level 3 T10 timer).	seconds
NT11TFRS	The value of the transfer restricted timer (level 3 T11 timer).	seconds
NT12UNAK	The value of the waiting for uninhibit timer (level 3 T12 timer).	seconds
NT13FUNH	The value of the waiting for force uninhibit timer (level 3 T13 timer).	seconds
NT14INAK	The value of the waiting for inhibition acknowledgment timer (level 3 T14 timer).	seconds
NT15RSCT	The value of the waiting for repeat signaling routeset congestion test timer (level 3 T15 timer).	seconds

Table 4-61. Record Base STP Measurements (Continued)

Event Name	Description	Unit
NT16RSCS	The value of the waiting for routeset status update timer (level 3 T16 timer).	seconds
NT17REAL	The value of the delay to avoid oscillation of initial alignment failure and restart timer (level 3 T17 timer).	seconds
NT18TCLR	The value of the transfer cluster restricted interval timer (level 3 T18 timer).	seconds
NT19FLKR	The value of the failed link craft referral timer (level 3 T19 timer).	seconds
NT20RLIH	The value of the waiting to repeat local inhibit test timer (level 3 T20 timer).	seconds
NT21RRIH	The value of the waiting to repeat remote inhibit test timer (level 3 T21 timer).	seconds
NT22RSTL	The value of the restarting SP waiting for links to become available timer (level 3 T22 timer).	seconds
NT23WTRA	The value of the waiting after T22 to receive all TRAs timer (level 3 T23 timer).	seconds
NT24BTRA	The value of the restarting: waiting to broadcast all TRAs timer (level 3 T24 timer).	seconds
NT25WTRA	The value of the adjacent and restarting: waiting for TRA timer (level 3 T25 timer).	seconds
NT26RTRW	The value of the restarting: waiting to repeat TRW timer (level 3 T26 timer).	seconds
NT28WTRW	The value of the adjacent: waiting for TRW timer (level 3 T28 timer).	seconds
NT29RSUX	The value of the TRA sent, unexpected TRA, TRW, resumption timer (level 3 T29 timer).	seconds
NT30LMTF	The value of the limit TFPs/TFRs for unexpected TRAs/TRWs timer (level 3 T30 timer).	seconds
NT31FLCD	The value of the false link congestion detection timer (level 3 T31 timer).	seconds
NT32OSCA	The value of the link oscillation filter - procedure A timer (level 3 T32 timer).	seconds
PROCS	The number of configured cards that are in service normal (IS-NR) or in-service abnormal (IS-ANR).	peg count
STATUS	**Indication of Data Validity** - ***K*** indicates good data; ***I*** indicates incomplete interval; ***N*** indicates data not current.	status
STLOOP	The value of the supervision timer for circular route detection test timer (the value of the mtpltst parameter of the *chg-stpopts* command).	seconds

OAM Example Output:

```
    tekelecstp 03-12-11 10:18:36 EST EAGLE 34.0.0
    TYPE OF REPORT: RECORD BASE MEASUREMENTS ON STP
    REPORT PERIOD: ACTIVE
    REPORT INTERVAL:  03-12-11,  10:18:36 THROUGH CURRENT

    STP-RBASE MEASUREMENTS

    PROCS      =         0, LNKSETS    =         0, LINKS      =         0,
    BUSS       =         0, NT1TDCHO   =         0, NT2CHOAK   =         0,
    NT3DCHB    =         0, NT4CHBK1   =         0, NT5CHBK2   =         0,
    NT6DCRR    =         0, NT7SLKCN   =         0, NT8TRPRH   =         0,
    NT10SRST   =         0, NT11TFRS   =         0, NT12UNAK   =         0,
    NT13FUNH   =         0, NT14NAK    =         0, NT15RSCT   =         0,
    NT16RSCS   =         0, NT17REAL   =         0, NT18TCLR   =         0,
    NT19FLKR   =         0, NT20RLIH   =         0, NT21RRIH   =         0,
    NT22RSTL   =         0, NT23WTRA   =         0, NT24BTRA   =         0,
    NT25WTRA   =         0, NT26RTRW   =         0, NT28WTRW   =         0,
    NT29RSUX   =         0, NT30LMTF   =         0, NT31FLCD   =         0,
    NT32OSCA   =         0, STLOOP     =         0, CTSDLSST   =         0
```

;

MP Example Output File Name: **`rbase-stp_19990117_1551.csv`**

Example Output File Format:

```
"CLLI","SWREL","RPTDATE","RPTIME","TZ","RPTTYPE","RPTPD","IVALDATE",
"IVALSTART","IVALEND","NUMENTIDS"<cr><lf>
"tekelecstp","34.0.0-39.1.0","1999-01-17","15:51:37","EST",
"RECORD BASE MEASUREMENTS ON
STP","ACTIVE","1999-01-17","15:51:32","15:51:32",1<cr><lf>
<cr><lf>
"STATUS","PROCS","LNKSETS","LINKS","BUSS","NT1TDCHO","NT2CHOAK","NT3DCHB",
"NT4CHBK1","NT5CHBK2","NT6DCRR","NT7SLKCN","NT8TRPRH","NT10SRST","NT11TFRS",
"NT12UNAK","NT13FUNH","NT14NAK","NT15RSCT","NT16RSCS","NT17REAL","NT18TCLR",
"NT19FLKR","NT20RLIH","NT21RRIH","NT22RSTL","NT23WTRA","NT24BTRA","NT25WTRA",
"NT26RTRW","NT28WTRW","NT29RSUX","NT30LMTF","NT31FLCD","NT32OSCA","STLOOP",
"CTSDLSST"<cr><lf>
"K",50,100,340,2,0,0,0,0,0,0,0,0,0,0,0,0,0,0,0,0,0,0,0,0,0,0,0,0,0,0,0,0,0,0
<cr><lf>
```

Typical file size is:

System header	+ Report header	+ Report data		
250	+ 390	+ 222	=	862 bytes

enttype=lnkset

Example Commands:

OAM: *rept-meas:type=rbase:enttype=lnkset:lsn=ls1201a*

MP: *rept-ftp-meas:type=rbase:enttype=lnkset*

Table 4-62. Record Base Linkset Measurements

Event Name	Description	Unit
LINKS	The number of configured signaling links.	peg count
RCLKBFRS	The number of receiving link buffers. The number of receiving link buffers is always 1 for each signaling link, so a value of 1 is always reported for this register.	peg count
ST01SLTA	Supervision timer for SLTA.	seconds
ST02SLTI	SLT interval timer.	seconds
STATUS	**Indication of Data Validity** - ***K*** indicates good data; ***I*** indicates incomplete interval; ***N*** indicates data not current.	status

OAM Example Output:

```
    tekelecstp 03-12-11 10:19:30 EST EAGLE 34.0.0
    TYPE OF REPORT: RECORD BASE MEASUREMENTS ON LINKSET
    REPORT PERIOD: ACTIVE
    REPORT INTERVAL:  03-12-11,  10:19:30 THROUGH CURRENT

    LNKSET-RBASE MEASUREMENTS: ls1201

    LINKS      =         0, RCLKBFRS   =         0, ST01SLTA   =         0,
    ST02SLTI   =         0

;
```

MP Example Output File Name: **`rbase-lnkset_19990117_1551.csv`**

MP Example Output File Format:

```
"CLLI","SWREL","RPTDATE","RPTIME","TZ","RPTTYPE","RPTPD","IVALDATE",
"IVALSTART","IVALEND","NUMENTIDS"<cr><lf>
"tekelecstp","34.0.0-39.1.0","1999-01-17","15:51:37","EST",
"RECORD BASE MEASUREMENTS ON
LINKSET","ACTIVE","1999-01-17","15:51:32","15:51:32",120<cr><lf>
<cr><lf>
"STATUS","LSN","LNKTYPE","LINKS","RCLKBFRS","ST01SLTA","ST02SLTI"<cr><lf>
"K","ls1201","SAAL",4,3,0,0<cr><lf>

. . . . .

"K","ls5204","MTP2",6,2,0,0<cr><lf>
```

Assuming each data line will be:

4 char status + 8 char LSN + 7 char LNKTYPE + 4*(6 char data) + 2 = 45 chars

For a report of 600 linksets, the typical file size is:

System header + Report header + Report data

250 + 67 + 27000 = 27317 bytes

enttype=link

Example Commands:

OAM: *rept-meas:type=rbase:enttype=link:loc=1201:link=a*

MP: *rept-ftp-meas:type=rbase:enttype=link*

Table 4-63. Record Base Link Measurements

Event Name	Description	Unit
CNGONTH1	The level 1 congestion onset threshold for link transmit buffers.	octets
CNGDITH1	The level 1 congestion discard threshold for link transmit buffers.	octets
CNGABTH1	The level 1 congestion abatement threshold for link transmit buffers.	octets
CNGONTH2	The level 2 congestion onset threshold for link transmit buffers.	octets
CNGDITH2	The level 2 congestion discard threshold for link transmit buffers.	octets
CNGABTH2	The level 2 congestion abatement threshold for link transmit buffers.	octets
CNGONTH3	The level 3 congestion onset threshold for link transmit buffers.	octets
CNGDITH3	The level 3 congestion discard threshold for link transmit buffers.	octets
CNGABTH3	The level 3 congestion abatement threshold for link transmit buffers.	octets
STATUS	**Indication of Data Validity** - ***K*** indicates good data; ***I*** indicates incomplete interval; ***N*** indicates data not current.	status
The following registers are applicable to MTP level 2 links ONLY. These registers are omitted from reports for ATM based links on EAGLE 5 ISS HMI output. On SEAS reports these registers are reported as ZERO-valued.		
LT1ALNRD	The value of the aligned/ready timer (level 2 T1 timer).	seconds
LT2NOALN	The value of the not aligned timer (level 2 T2 timer).	seconds
LT3ALIND	The value of the aligned timer (level 2 T3 timer).	seconds
LT4NMLPV	The value of the proving period (normal) timer (level 2 T4npp timer).	seconds

Table 4-63. Record Base Link Measurements (Continued)

Event Name	Description	Unit
LT4EMGPV	The value of the proving period (emergency) timer (level 2 T4epp timer).	seconds
LT5SDSIB	The value of the sending SIB timer (level 2 T5 timer).	seconds
LT6RMCNG	The value of the remote congestion timer (level 2 T6 timer).	seconds
LT7XDLAK	The value of the excessive delay of acknowledgment timer (level 2 T7 timer).	seconds

OAM Example Output:

```
    eagle10706 03-06-16 02:44:58 EST EAGLE 34.0.0
    TYPE OF REPORT: RECORD BASE MEASUREMENTS ON LINK
    REPORT PERIOD: ACTIVE
    REPORT INTERVAL:  03-06-16,  02:44:58 THROUGH CURRENT

    LINK-RBASE MEASUREMENTS FOR LINKSET lsn4:

    eagle10706 03-06-16 02:45:00 EST EAGLE 34.0.0
    LINK-RBASE MEASUREMENTS: LOC: 1202, LINK: B  , LSN: lsn4

    CNGONTH1   =        80, CNGDITH1   =        99, CNGABTH1   =        60,
    CNGONTH2   =       101, CNGDITH2   =       109, CNGABTH2   =        81,
    CNGONTH3   =       111, CNGDITH3   =       120, CNGABTH3   =       101,
    LT1ALNRD   =         5, LT2NOALN   =        30, LT3ALIND   =         5,
    LT4NMLPV   =       2.3, LT4EMGPV   =       0.6, LT5SDSIB   =       0.5,
    LT6RMCNG   =         4, LT7XDLAK   =       1.5

;
    eagle10706 03-06-16 02:45:00 EST EAGLE 34.0.0
    LINK-RBASE MEASUREMENTS: LOC: 1204, LINK: A  , LSN: lsn4    (SAAL)

    CNGONTH1   =       930, CNGDITH1   =      2490, CNGABTH1   =       780,
    CNGONTH2   =      2790, CNGDITH2   =      4350, CNGABTH2   =      2640,
    CNGONTH3   =      4560, CNGDITH3   =      5250, CNGABTH3   =      4500

;
    eagle10706 03-06-16 02:45:01 EST EAGLE 34.0.0
    END OF ON-DEMAND LINK-RBASE MEASUREMENT REPORT
;
```

MP Example Output File Name: **rbase-link_19990117_1551.csv**

MP Example Output File Format:

```
"CLLI","SWREL","RPTDATE","RPTIME","TZ","RPTTYPE","RPTPD","IVALDATE",
"IVALSTART","IVALEND","NUMENTIDS"<cr><lf>
"tekelecstp","34.0.0-39.1.0","1999-01-17","15:51:37","EST",
"RECORD BASE MEASUREMENTS ON
LINK","ACTIVE","1999-01-17","15:51:32","15:51:32",120<cr><lf>
<cr><lf>
"STATUS","LSN","LOC","LINK","LNKTYPE","CNGONTH1","CNGDITH1","CNGABTH1","CNGONTH2",
"CNGDITH2","CNGABTH2","CNGONTH3","CNGDITH3","CNGABTH3","LT1ALNRD","LT2NOALN",
"LT3ALIND","LT4NMLPV","LT4EMGPV","LT5SDSIB","LT6RMCNG","LT7XDLAK"<cr><lf>
"K","lsn4","1202","B2","MTP2",80,99,60,101,109,81,111,120,101,5,30,5,2.3,0.6,0.5,4
,1.5<cr><lf>

. . . . .

"K","lsn4403","1204","A","SAAL",930,2490,780,2790,4350,2640,4560,5250,4500,
0,0,0,0,0,0,0,0<cr><lf>
```

Assuming each data line will be:

4 char status + 8 char LSN + 7 char LOC + 5 char LINK + 7 char LNKTYPE +
17*(6 char data) + 2 = 135 chars

For a report of 600 linksets, the typical file size is:

System header	+	Report header	+	Report data		
250	+	226	+	81000	=	81476 bytes

Maintenance Status Reports

The Maintenance Status (MTCS) report is a snapshot of the maintenance status indicators. It supports entity types LINK and LNKSET. The report is available through the EAGLE 5 ISS terminal interface and through the SEAS interface via the OAP.

Entity Types: Lnkset and Link

Accumulation Interval: Snapshot

STP Retention Period: None

Reporting Mode: On-demand (EAGLE 5 ISS/SEAS)

Accessible Collection Period: Active (snapshot)

enttype=link

Example Commands:

OAM: *rept-meas:type=mtcs:enttype=link:loc=1201:link=a*

MP: *rept-ftp-meas:type=mtcs:enttype=link*

Table 4-64. Maintenance Status Link Measurements

Event Name	Description	Unit
LKMTCST	Maintenance State	***ACT –*** link primary state is IS-NR and is or can be used to carry traffic. ***UNAV*** - link has been made unavailable by local or centralized maintenance personnel (inhibited or canceled link or active local processor outage). ***OOS*** – link out-of-service but can be made available by the STP.
PROSTAT	Indication of processor outage status units being received.	***Y –*** link failure reason of remote processor outage exists. ***N*** - link failure reason of remote processor outage does not exist.
PROTRAN	Indication of processor outage status units being transmitted.	***Y*** – link failure reason of local processor outage exists. ***N*** - link failure reason of local processor outage does not exist.
MGMTINHB	Indication of link management inhibit status	***L*** (Local) - link is deactivated or inhibited or link failure reason of local processor outage exists. ***R*** (remote) - link failure reason of remote processor outage exists or remote management initiated exists. ***B*** (Both) – both local and remove failure reasons exist. ***N*** (Not/Neither) no local or remote failure reasons exists.
CGSTLEVL	Current link transmit congestion level	Congestion level: ***0 –*** no link congestion ***1, 2,*** or ***3*** - link congestion level exists.
CGSTSTAT	Current link transmit congestion state	***N –*** none (congestion level 0) ***O*** – onset (congestion level 1, 2, or 3).
STATUS	**Indication of Data Validity** - ***K*** indicates good data; ***I*** indicates incomplete interval; ***N*** indicates data not current.	status.

Table 4-64. Maintenance Status Link Measurements (Continued)

Event Name	Description	Unit
DCLRFAIL	Indication of link declared failure state (last known cause)	***N*** – not failed. LSL: Link is available to send and receive MSUs (in-service normal state). HSL: Same ***ABN*** – link failed due to receiving too many abnormal FIBR/BNSR. LSL: Link received 2 out of 3 invalid BSNs. Link received 2 out of 3 invalid FIBs. HSL: N/A ***XDA*** – Excessive delay of acknowledgment LSL: MSU not acknowledged within level 2 -T7 timer expiration. T7 configurable between .5 and 2.0 seconds. HSL: Timer no response or timer no credit expired. ***XER*** – Excessive error rate. Received 64 out of 256 signaling units in error. LSL: Signaling Unit Error Rate Monitor HSL: Signaling Unit-Error-Rate-Monitor threshold exceeded. ***XDC*** – Excessive duration of congestion LSL: Level-2 T6 timed-out HSL: N/A. ***APF*** – alignment/proving failure LSL: Link not aligned. Link state control aligned not ready or aligned ready timeout (T1), initial alignment control timeout (T2,T3), initial alignment control abort proving – maximum proving period, or initial alignment control received SIOS. HSL: N/A.

OAM Example Output:

```
    eagle10706 99-06-16 02:44:58 EST EAGLE 34.0.0
    TYPE OF REPORT: MTCS MEASUREMENTS ON LINK
    REPORT PERIOD: ACTIVE
    REPORT INTERVAL:  99-06-16,  02:44:58 THROUGH CURRENT

    LINK-MTCS MEASUREMENTS FOR LINKSET lsn4:

    eagle10706 99-06-16 02:45:00 EST EAGLE 34.0.0
    LINK-MTCS MEASUREMENTS: LOC: 1202, LINK: B  , LSN: lsn4

    LKMTCST  =       ACT, PROSTAT  =         N, PROTRAN  =         N,
    DCLRFAIL =         N, MGMTINHB =         N, CGSTLEVL =         O,
    CGSTSTAT =         N
;
    eagle10706 99-06-16 02:45:00 EST EAGLE 34.0.0
```

```
    LINK-MTCS MEASUREMENTS: LOC: 1204, LINK: A  , LSN: lsn4    (SAAL)

    LKMTCST  =      UNAV, PROSTAT  =         N, PROTRAN  =         Y,
    DCLRFAIL =       MMR, MGMTINHB =         L, CGSTLEVL =         0,
    CGSTSTAT =         N
;

    eagle10706 99-06-16 02:45:01 EST EAGLE 34.0.0
    END OF ON-DEMAND LINK-MTCS MEASUREMENT REPORT
;
```

MP Example Output File Name: **`mtcs-link_19990117_1551.csv`**

```
CLLI","SWREL","RPTDATE","RPTIME","TZ","RPTTYPE","RPTPD","IVALDATE",
"IVALSTART","IVALEND","NUMENTIDS"<cr><lf>
"tekelecstp","34.0.0-39.1.0","1999-01-17","15:51:37","EST",
"MAINTENANCE STATUS INDICATORS ON LINK","ACTIVE","1999-01-17","15:51:32",
"15:51:32",120<cr><lf>
<cr><lf>
"STATUS","LSN","LOC","LINK","LNKTYPE","LKMTCST","PROSTAT","PROTRAN","DCLRFAIL",
"MGMTINHB","CGSTLEVL","CGSTSTAT"<cr><lf>
"K","lsn4","1202","B2","MTP2","'ACT'","'N'","'N'","'N'","'N'","'O'","'N'"<cr><lf>

. . . . .

"K","lsn4403","1204","A","SAAL","'UNAV'","'N'","'Y'","'MMR'","'L'","'0'","'N'"<cr>
<lf>
```

Assuming each data line will be:

4 char status + 8 char LSN + 7 char LOC + 5 char LINK + 7 char LNKTYPE +
7*(6 char data) + 2 = 75 chars

For a report of 600 linksets, the typical file size is:

System header	+	Report header	+	Report data		
250	+	113	+	45000	=	45363 bytes

enttype=lnkset

Example Commands:

OAM: *rept-meas:type=mtcs:enttype=lnkset:lsn=ls1201*

MP: *rept-ftp-meas:type=mtcs:enttype=lnkset*

Table 4-65. Maintenance Status Linkset Measurements

Event Name	Description	Unit
LKMTCST	Maintenance State	**ACT –** link primary state is IS-NR and is or can be used to carry traffic. **UNAV** - link has been made unavailable by local or centralized maintenance personnel (inhibited or canceled link or active local processor outage). **OOS** – link out-of-service but can be made available by the STP.
ACTLINKS	Number of currently active links.	Number of links in the IS-NR (ACT) state.
UAVLINKS	Number of links in the unavailable maintenance state.	Number of links in the OOS-MT-DSBLD (UNAV) state.
OOSLINKS	Number of out-of-service links	Number of links in a maintenance state other than IS-NR and OOS-MT-DSBLD.
STATUS	**Indication of Data Validity** - ***K*** indicates good data; ***I*** indicates incomplete interval; ***N*** indicates data not current.	status

OAM Example output:

```
    tekelecstp 03-12-19 13:35:08 EST EAGLE 34.0.0
    TYPE OF REPORT: MTCS MEASUREMENTS ON LINKSET
    REPORT PERIOD: ACTIVE
    REPORT INTERVAL:  03-12-19,  13:00:00 THROUGH CURRENT

    LINKSET-MTCS MEASUREMENTS: ls1201

    These measurements are from 03-12-19, 13:00:00 through 13:29:59.
    LSMTCST =       ACT, ACTLINKS =         1, UAVLINKS =         1,
    OOSLINKS =        0,
;


    tekelecstp 03-12-19 13:35:10 EST EAGLE 34.0.0
    END OF ON-DEMAND LINKSET-MTCS MEASUREMENT REPORT
;
```

MP Example Output File Name: **`mtcs-lnkset_19990117_1551.csv`**

MP Example Output File Format:

```
"CLLI","SWREL","RPTDATE","RPTIME","TZ","RPTTYPE","RPTPD","IVALDATE",
"IVALSTART","IVALEND","NUMENTIDS"<cr><lf>
"tekelecstp","34.0.0-39.1.0","1999-01-17","15:51:37","EST",
"MAINTENANCE STATUS INDICATORS ON LINKSET","ACTIVE","1999-01-17","15:51:32",
"15:51:32",120<cr><lf>
<cr><lf>
"STATUS","LSN","LNKTYPE","LSMTCST","ACTLINKS","UAVLINKS","OOSLINKS"<cr><lf>
"K","lsn4","SAAL","'ACT'",1,1,0<cr><lf>

. . . . .

"K","lsn120","MTP2","'ACT'",4,1,1<cr><lf>
```

Assuming each data line will be:

4 char status + 8 char LSN + 7 char LNKTYPE + 4*(6 char data) + 2 = 45 chars

For a report of 600 linksets, the typical file size is:

System header	+	Report header	+	Report data	=	
250	+	69	+	27000	=	27319 bytes

A

Card Removal/Replacement Procedures

Contents ..... Page
Introduction A-3
Administrative Procedures A-3
Maintenance Disk and Alarm (MDAL) Card Replacement A-3
General Purpose Service Module (GPSM-II) Card Replacement A-5
HIPR/HMUX Card Replacement A-10
Determine LIM, MIM, and MPL Changeout Time A-16
SS7 and IP7, LIM, MIM, HC-MIM and MPL Card Replacement A-17
X.25 Link Interface Module (LIM) A-27
Transaction Service Module (TSM) - SCCP A-30
Transaction Service Module (TSM) - GLS A-34
Database Services Module (DSM) - VSCCP A-36
Application Communications Module (ACM) A-39
Database Communications Module (DCM) and EDCM/EDCM-A A-42
Terminal Disk Module (TDM)/TDM-GTI A-47
Measurement Collection and Polling Module (MCPM) A-56
Replacing a Card in the EAGLE 5 ISS A-57
Replacing Cards in the Holdover Clock A-59
    Failed Clock Input (CI) Card Replacement A-59
    Non-Failed Clock Input (CI) Card Replacement A-61

ST3 Card Replacement A-62
MIS Card Replacement A-65
TOCA Card Replacement A-67
Fan Assembly A-71
Fan Assembly A-71
Replace Fan Unit A-71
Replace Fan Controller Card A-72
Replace Fan Assembly A-72
EAGLE 5 ISS Replacement Parts List A-81
Replacement Cables List A-82

Introduction

This appendix explains how to remove a card from the EAGLE 5 ISS. There are two parts to this appendix. The first part describes the administrative commands required to take a card out of service and place it back into service. The second part explains how to physically remove a card from the card shelf.

Always wear a wrist strap or other electrostatic protection when handling EAGLE 5 ISS cards.

Always place removed cards into an electrostatic protection bag before sending to Tekelec, or storing in inventory (unless the card is being stored in the optional spare card storage shelf).

Administrative Procedures

This section describes the administrative procedures that should be followed whenever an EAGLE 5 ISS card is replaced. The procedures are divided by card type.

In the event a numbered event message is encountered, refer to the appropriate procedure in Chapter 3, "Corrective Maintenance".

Additional information about each command can be found in the *Commands Manual*.

Maintenance Disk and Alarm (MDAL) Card Replacement

Description

The MDAL (Figure A-1) provides a dry contact closure for external alarm indicators, such as bells, horns and lamp indicators. The MDAL also contains the removable cartridge drive.

Procedure

---

1. Verify the removable cartridge is not in the removable cartridge drive. Remove the cartridge if necessary.

Reference: Removable Cartridge Handling Procedures

---

2. Remove the card from service as described in the section titled, “Replacing a Card in the EAGLE 5 ISS” on page A-57.

NOTE: Removing the MDAL creates a critical alarm at the Remote Maintenance Center (RMC) as well as the local office.

MDAL, Maintenance Disk and Alarm Card

Figure A-1. MDAL LEDs

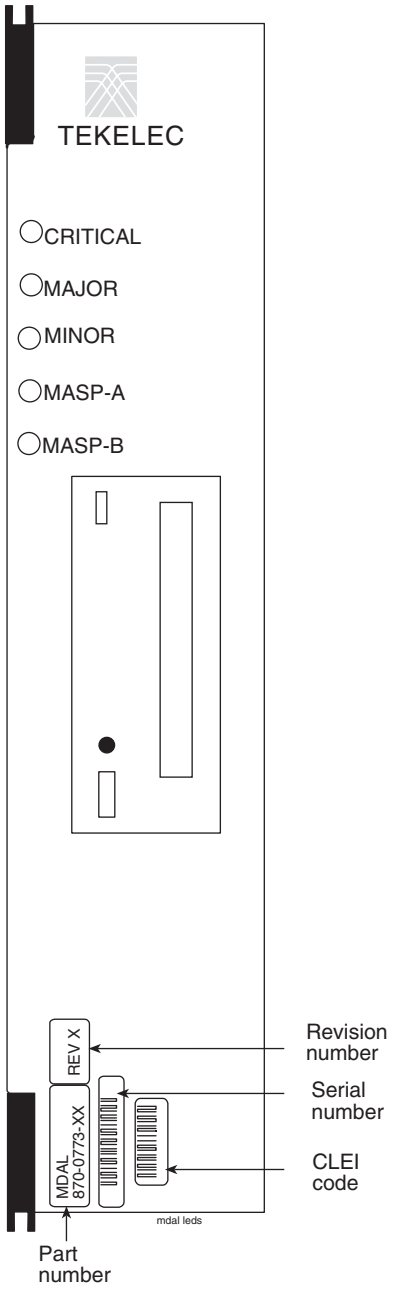

LEDs	Descriptions
CRITICAL	RED – Critical alarm condition detected GREEN – No alarm
MAJOR	RED – Major alarm condition detected GREEN – No alarm
MINOR	AMBER – Minor alarm condition detected GREEN – No alarm
MASP-A	GREEN – MASP-A is the active MASP OFF – MASP-A is the standby MASP or is not present
MASP-B	GREEN – MASP-B is the active MASP OFF – MASP-B is the standby MASP or is not present

General Purpose Service Module (GPSM-II) Card Replacement

Description

The GPSM-II (Figure A-2) contains the communication processor and applications processor for the operations, administration, and maintenance (OAM) software and provides connections to the IMT bus.

The GPSM-II is a member of the EDCM/EDCM-A card family. The GPSM-II is based on the single-slot EDCM/EDCM-A card with the addition of a one GByte expansion memory (UD1G) module.

Procedure

1. If the active GPSM-II card fails, the EAGLE 5 ISS automatically switches activity to the standby MASP.

2. Enter the following command to retrieve the terminal types and port numbers:

rtrv-trm

The following is an example of the possible output.

```
RLGHNCXA03W  98-01-01 16:02:08 EST EAGLE 34.0.0
TRM  TYPE    COMM        FC    TMOUT MXINV DURAL
1    VT320    9600-7-E-1 SW    60    5     99:59:59
2    VT320    9600-7-E-1 BOTH  60    5     INDEF
3    KSR      9600-7-E-1 SW    60    0     00:00:00
4    NONE     9600-7-E-1 SW    60    5     00:30:00
5    NONE     9600-7-E-1 SW    60    5     00:00:30
6    SEAS    19200-7-E-1 SW    0     5     INDEF
7    VT320    9600-7-E-1 SW    60    5     99:59:59
8    VT320    9600-7-E-1 SW    60    5     INDEF
9    VT320    9600-7-E-1 SW    60    0     00:00:00
10   VT320    9600-7-E-1 SW    60    5     00:30:00
11   VT320    9600-7-E-1 NONE  60    5     00:00:30
12   NONE    19200-7-E-1 SW    0     5     INDEF
13   VT320    9600-7-E-1 SW    60    5     99:59:59
14   VT320    9600-7-E-1 SW    60    5     INDEF
15   VT320    9600-7-E-1 SW    60    0     00:00:00
16   VT320    9600-7-E-1 SW    60    5     00:30:00

                                    LNP LNP
TRM  TRAF LINK SA  SYS PU  DB  DB  SUB
1    YES  YES  YES YES YES YES YES YES
2    YES  YES  YES YES YES YES YES YES
3    YES  YES  YES YES YES YES YES YES
4    YES  YES  YES YES YES YES YES YES
5    YES  YES  YES YES YES YES YES YES
6    YES  YES  YES YES YES YES YES YES
7    YES  YES  YES YES YES YES YES YES
8    YES  YES  YES YES YES YES YES YES
9    YES  YES  YES YES YES YES YES YES
10   YES  YES  YES YES YES YES YES YES
11   YES  YES  YES YES YES YES YES YES
```

```
12   YES  YES  YES YES YES YES YES YES
13   YES  YES  YES YES YES YES YES YES
14   YES  YES  YES YES YES YES YES YES
15   YES  YES  YES YES YES YES YES YES
16   YES  YES  YES YES YES YES YES YES
Command Completed
```

---

3. If your system has the LNP feature, enter the following command to inhibit each OAP terminal displayed in the output from Step 2:

inh-trm:trm=x

where x is the terminal number.

---

4. Enter the following command to ensure no OAP updates are inadvertently sent to the database as you continue this procedure:

chg-term:trm=x:type=none

---

5. Remove the card from service as described in the section titled, "Replacing a Card in the EAGLE 5 ISS" on page A-57.

---

6. Enter the following command to change the state of the appropriate card to the Out of Service - Maintenance Disabled state:

*inh-card:loc=**xxxx**:force=yes*

where **xxxx** is the card location stenciled on the shelf of the EAGLE 5 ISS.

Following is an example of the output:

```
RLGHNCXA03W  00-06-05  11:11:28 EDT  EAGLE 34.0.0
Card has been inhibited.
```

---

7. Enter the following command to load the approved GPL onto the card inhibited. Refer to the *Commands Manual* to verify additional optional parameter usage for the *init-flash* command.

*init-flash:code=appr:loc=**xxxx***

where **xxxx** is the card location used in Step 6.

Following is an example of the output using card location 1115:

```
    RLGHNCXA03W  00-06-05  11:11:28 EDT  EAGLE 34.0.0
    FLASH Memory Downloading for card 1115 Started.
;
    RLGHNCXA03W  00-06-05  11:11:28 EDT EAGLE 34.0.0
    BPHCAP Downloading for card 1115 Complete.
;
    RLGHNCXA03W  00-06-05  11:11:28 EDT  EAGLE 34.0.0
    Command Completed.
```

When the *init-flash* command has completed successfully, the card specified in the *init-flash* command is rebooted.

---

8. Enter the following command to put the card that was inhibited in Step 6 back into service:

alw-card:loc=xxxx

where **xxxx** is the card location used in Step 6.

Following is an example of the output:

```
RLGHNCXA03W  00-06-05  11:11:28 EDT  EAGLE 34.0.0
Card has been allowed.
```

NOTE: Allow the card to run for 5 minutes before continuing.

---

9. Enter the following command to activate the approved GPL loaded onto the card in Step 7:

*act-flash:loc=**xxxx***

where **xxxx** is the card location used in Step 7.

Following is an example of the output using card location 1115:

```
    RLGHNCXA03W  00-06-05  11:11:28 EDT  EAGLE 34.0.0
    FLASH Memory Activation for card 1115 Completed.
;
    RLGHNCXA03W  00-06-05  11:11:28 EDT  EAGLE 34.0.0
    Command Completed.
```

---

10. After the card has been reloaded (a message appears to confirm completion of the load), enter the following command to verify the database is consistent (same level as the other cards in the system).

rept-stat-card

The following is an example of the possible output.

```
RLGHNCXA03W 98-02-04 12:57:21 EST EAGLE 34.0.0
CARD  VERSION       TYPE    APPL      PST       SST       AST
1113  023-102-000   MASP    OAM       IS-NR     Active    -----
1114  -----------   TDM     --------  IS-NR     Active    -----
1115  ----------   MASP    OAM        IS-NR     Active    -----
1116  -----------   TDM     --------  IS-NR     Active    -----
1117  -----------   MDAL    --------  IS-NR     Active    -----
1201  023-102-000   LIM0CU  CCS7ITU   IS-NR     Active    -----
1202  023-001-000   LIMDS0  CCS7ITU   IS-NR     Active    M BIP ERR
1203  023-001-000   LIMDS0  SS7ANSI   IS-NR     Active    -----
1205  023-001-000   LIMDS0  CCS7ITU   IS-NR     Active    M BIP ERR
1207  023-001-000   LIMATM  ATMANSI   IS-NR     Active    -----
1211  023-001-000   LIMATM  ATMANSI   IS-NR     Active    ALMINH
1212  023-001-000   TSM     SCCP      IS-NR     Active    ALMINH
Command Completed.
```

---

11. If you have performed Step 4 to safeguard against inadvertent OAP updates, enter the following command to remove the allow OAP update capability:

chg-trm:trm=x:type=OAP

---

12. Enter the following command to return the OAP terminals to the In-Service state:

alw-trm:trm=x

where x is the terminal number.

---

13. Enter the following command to verify the database:

rept-stat-db

The following is an example of the possible output for a good database.

```
rept-stat-db

Command Accepted - Processing

    oflnmoxa11w 98-10-08 15:56:40 CDT EAGLE 34.0.0
    rept-stat-db
    Command entered at terminal #4.
;

    oflnmoxa11w 98-10-08 15:56:40 CDT EAGLE 34.0.0
DATABASE STATUS: >> OK <<
    TDM 1114 ( STDBY)                    TDM 1116 ( ACTV )
         C   LEVEL    TIME LAST BACKUP     C   LEVEL    TIME LAST BACKUP
         - -------- ---------------------  - -------- ---------------------
FD BKUP  Y   342256 98-10-07 00:40:29 CDT  Y   342256 98-10-07 00:40:29 CDT
FD CRNT  N   342374                        Y   342375
       MDAL 1117
         - --------
```

GPSM-II, General Purpose Service Module

Figure A-2. GPSM-II

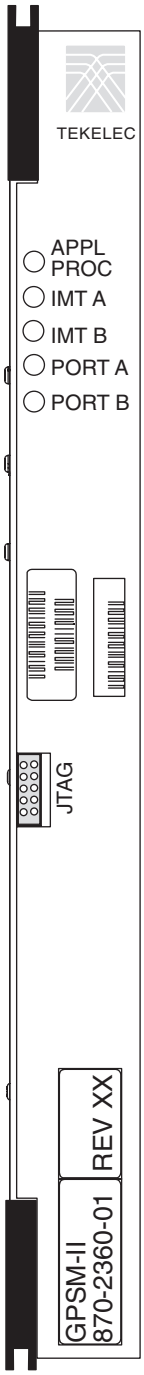

LEDs	Descriptions
APPL PROC	RED – Critical alarm condition detected. GREEN – No alarm
IMT A	RED – Major alarm condition detected. AMBER – Minor alarm condition detected. GREEN – No alarm
IMT B	RED – Major alarm condition detected. AMBER – Minor alarm condition detected. GREEN – No alarm
PORT A	GREEN – PORT A is the active PORT. RED – PORT A is inactive
PORT B	GREEN – PORT B is the active PORT. RED – PORT B is inactive.

HIPR/HMUX Card Replacement

Description

The HIPR/HMUX card provides access to the IMT bus for all cards in the shelf.

The High-Speed Inter-processor Message Transport Packet Router (HIPR) (Figure A-3) provides connectivity to the IMT bus by using switched 125Mbps interfaces to each slot within a shelf. The HIPR card interoperates with the HMUX card and provides connectivity to the 1Gbps inter-shelf bus. The HIPR card transmits data between shelves only when it is necessary. Traffic between EAGLE 5 ISS cards on the same shelf are switched directly to the destination slot and do not transmit to any other cards in the shelf. Traffic between shelves are not required to pass onto an intra-shelf IMT channel if it is not necessary. The HIPR card is required in shelves equipped with high-performance LIMs, such as the High-Capacity MIM. The HIPR card requires all other shelves within the EAGLE 5 ISS to be equipped with the HMUX card or HIPR card.

The High-Speed Multiplexer (HMUX) (Figure A-4), is used in EAGLE 5 ISS systems only. HMUX interoperates with HIPR and provides connectivity to the 1Gbps inter-shelf bus. The intra-shelf low speed IMT bus/ring data rate is 125Mbps. HMUX acts as a gateway between the EAGLE 5 ISS 1 Gbps inter-shelf high speed bus and 125 Mbps intra-shelf IMT bus. HMUX transmits data between shelves only when it is necessary. Traffic between EAGLE 5 ISS intra-shelf cards stay on the shelf IMT bus and are not required to transmit intra-shelf. Traffic between shelves are not required to pass onto an intra-shelf IMT channel if it is not necessary.

Each shelf contains two HIPR or HMUX cards, one for each IMT bus, that provide continuity of the IMT bus signals even with failed or missing circuit modules. A mixture of HMUX and HIPR cards within one IMT ring is possible, provided HIPR is installed on both the IMT A & IMT B bus in a given shelf.

Procedure

WARNING: Be sure to inhibit the correct IMT bus. If you inhibit the wrong IMT bus and then remove the HIPR/HMUX, total nodal isolation will occur. Wait until the IMT has returned to IS-NR before replacing the other HIPR/HMUX.

1. Enter the following command to verify the status of the IMT buses.

rept-stat-imt

The following is an example of the possible output.

```
RLGHNCXA03W 98-09-27 16:50:24 EST  EAGLE 34.0.0
 IMT   PST             SST        AST
  A    IS-NR           Active     -----
  ALARM STATUS       = No alarms
 IMT   PST             SST        AST
  B    IS-ANR          Fault      -----
  ALARM STATUS       = **  0108 Major IMT Failure Detected
Command Completed.
```

2. Enter the following command to inhibit the IMT bus associated with the HIPR/HMUX being removed (top HIPR/HMUX accesses bus A, bottom HIPR/HMUX accesses bus B).

   rmv-imt:bus=x

   where x is the IMT bus to be inhibited.

---

3. Perform Step 3 and Step 4 only if the OAP is being utilized. Otherwise, continue with Step 5.
   Enter the following command to retrieve the terminal types and port numbers:

   rtrv-trm

---

4. Enter the following command to inhibit each OAP terminal displayed in the output from Step 3:

   inh-trm:trm=x:force=yes

   where x is the terminal number assigned as type OAP.

---

5. Remove the HIPR/HMUX, per the card replacement procedure described in the section titled “Replacing a Card in the EAGLE 5 ISS” on page A-57. Place the new HIPR/HMUX into its place. Be sure the revision numbers are compatible (if in doubt, call Tekelec Technical Services at the appropriate number.

   Reference: “Customer Care Center” on page 1-13.

---

6. Enter the following command to restore the IMT bus.

   alw-imt:bus=x

   where x is the IMT bus inhibited.

NOTE: If UAM 0002 is output, the newly installed HIPR/HMUX card needs to be flashed.

7. Enter the following command to determine if the newly replaced cards memory needs to be flashed:

   *rept-stat-gpl:gpl=**xxxxxx***

   where *xxxxxx* is *hipr* or *bphmux.*

   Following is an example of a bphmux output:

```
tekelecstp 03-07-03 16:53:23 EST  EAGLE5 34.0.0-55.0.0
GPL Auditing  ON

GPL        CARD  RUNNING      APPROVED         TRIAL
BPHMUX     1209  028-005-000  028-005-000      -----------
BPHMUX     1210  028-005-000  028-005-000      -----------
BPHMUX     1309  028-004-000  028-005-000 ALM  -----------
BPHMUX     1310  028-005-000  028-005-000      -----------
```

NOTE: Mismatched GPLs should occur only during upgrades or running a trial GPL.

8. Examine the output from Step 7.
   If the GPLs match, continue with Step 17.
   If there is a GPL mismatch, continue with Step 9.

9. Enter the following command to verify GPL Auditing is **ON**.

   chg-gpl:audit=on

10. Enter the following command to load the GPL onto the HIPR/HMUX card.

    *init-flash:code=appr:loc=**xxxx***

    where **xxxx** is the card location newly replaced card.

    Following is an example of a bphmux output using card location 1309:

```
    RLGHNCXA03W  00-06-05  11:11:28 EDT  EAGLE 34.0.0
    FLASH Memory Downloading for card 1309 Started.
;
    RLGHNCXA03W  00-06-05  11:11:28 EDT EAGLE 34.0.0
    BPHMUX Downloading for card 1309 Complete.
;
    RLGHNCXA03W  00-06-05  11:11:28 EDT  EAGLE 34.0.0
    Command Completed.
```

11. Enter the following command to initialize the HIPR/HMUX.

CAUTION: This command boots the HIPR/HMUX processor and brings down the respective IMT bus temporarily (approximately 10 seconds) until the HMUX card comes back into service.

*init-mux:loc=**xxxx**:bus=**y***

where **xxxx** is the card location used in Step 10.

y is the bus

NOTE: Allow the card to run for 5 minutes before continuing.

12. Enter the following command to activate the GPL loaded onto the HIPR/HMUX card in Step 10:

    *act-flash:loc=**xxxx***

    where **xxxx** is the card location used in Step 9.

    Following is an example of the output using card location 1309:

```
    RLGHNCXA03W  00-06-05  11:11:28 EDT  EAGLE 34.0.0
    FLASH Memory Activation for card 1309 Completed.
;
```

```
RLGHNCXA03W  00-06-05  11:11:28 EDT  EAGLE 34.0.0
Command Completed.
```

13. Enter the following command to verify the approved GPLs match the running GPLs:

    *rept-stat-gpl:gpl=**xxxxxx***

    where ***xxxxxx*** is *hipr* or *bphmux* (the `GPL SYSTEM` identified in the output).

14. If the GPLs match, continue with Step 17.
    If the GPLs do not match, continue with Step 15.

15. Enter the following command determine which cards are in alarm condition (indicated by the acronym ALM in the *rept-stat-gpl* display):

    rept-stat-gpl

16. Note which cards are in an alarm condition and call Tekelec Technical Services at the appropriate number.

    Reference: “Customer Care Center” on page 1-13.
    Do not continue to Step 17.

17. Perform this step only if the the OAP was inhibited in Step 4. If Step 4 was not performed, continue with Step 18.
Enter the following command to return the OAP terminals to the in-service state:

alw-trm:trm=x

where x is the terminal number of the inhibited OAP terminal.

18. Enter the following command to verify that the HIPR/HMUX card is in service and the IMT bus has been restored.

rept-stat-imt

```
RLGHNCXA03W 98-09-27 16:50:24 EST  EAGLE 34.0.0
 IMT   PST             SST        AST
  A    IS-NR           Active     -----
  ALARM STATUS       = No alarms
 IMT   PST             SST        AST
  B    IS-NR          Active     -----
  ALARM STATUS       = No alarms
Command Completed.
```

HIPR, High-Speed Inter-processor Message Transport Packet Router

Figure A-3. HIPR LEDs

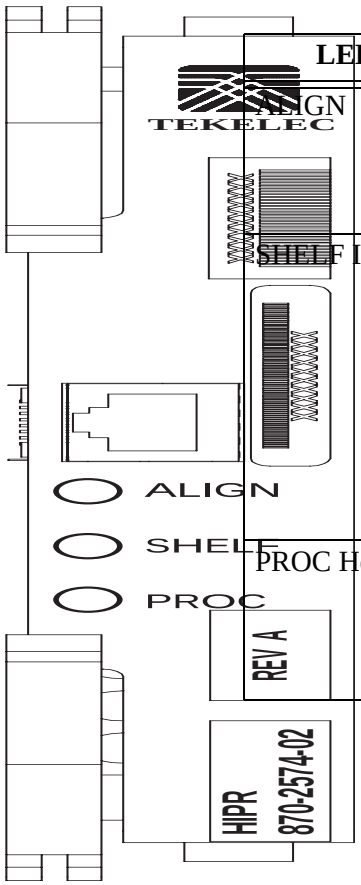

LEDs	Descriptions
ALIGN	AMBER – Programming XILINX complete GREEN – Complete code initialization (stays Amber until the first valid Shelf ID is received from MASP), Code running
SHELF ID	AMBER – Programming XILINX complete, Complete code initialization RED – While code running if ID address received from OAM **does not** match the on-board stored address read from the assigned shelf address register (see first note below) GREEN – While code running if ID address received from OAM matches the on-board stored address read from the assigned shelf address register (see second note below)
PROC Health	RED – Power on Reset AMBER – Programming XILINX GREEN – Programming XILINX complete, Complete code initialization, Code running

HMUX, High-Speed Multiplexer

Figure A-4. HMUX LEDs

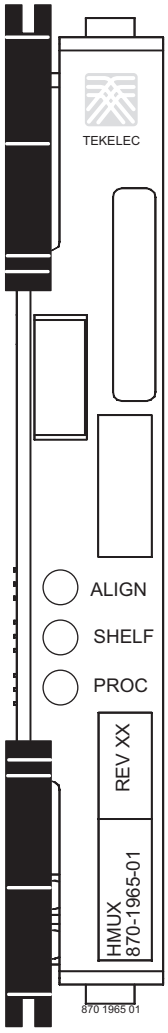

LEDs	Descriptions
ALIGN	AMBER – Programming XILINX complete GREEN – Complete code initialization (stays Amber until the first valid Shelf ID is received from MASP), Code running
SHELF ID	AMBER – Programming XILINX complete, Complete code initialization RED – While code running if ID address received from OAM **does not** match the on-board stored address read from the assigned shelf address register (see first note below) GREEN – While code running if ID address received from OAM matches the on-board stored address read from the assigned shelf address register (see second note below)
PROC Health	RED – Power on Reset AMBER – Programming XILINX GREEN – Programming XILINX complete, Complete code initialization, Code running

NOTE: The LED color state change during power up and reset happens within one second. To determine operating status, wait until reset is over.

NOTE: At start up, each HMUX card receives an ID address from the OAM. The HMUX card stores this address in on-board memory, in register FF. Every five seconds, the OAM re-sends the same addresses to the HMUX cards, which compare the re-send with the address they previously received and stored in memory. If the address sent to an HMUX card by OAM does not match the stored address, the HMUX Illegal Address Error alarm will cause the Shelf LED color to change to RED.

Determine LIM, MIM, and MPL Changeout Time

Description

This procedure assists the customer in deciding if the LIM should be changed immediately or during the Maintenance Window.

Procedure

1. Replace the LIM immediately if *any* of the following conditions exist:

•If there is only one link on the card

•If there is no other in-service link on this card

•If deactivating the LIM will not prohibit a destination

•If any destination is prohibited by the current failure.

2. Wait until the maintenance window to replace the card if *all* of the following conditions exist:

•If the faulty link is not the only in-service link on the card

•If deactivating the link will prohibit a destination

•If no destination is prohibited by the current failure.

SS7 and IP^7, LIM, MIM, HC-MIM and MPL Card Replacement

Description

This Link Interface Module (LIM) (Figure A-5) provides access to remote SS7, IP and other network elements, such as a Signaling Control Point (SCP). This card is equipped with an industry-standard ATM, DS0, OCU, or V.35 interface. The MIM card can also be equipped with an industry-standard DS1 interface.

The types of LIMs currently available are:

- LIM-DS0A
- LIM-OCU
- LIM-V.35
- LIM
- Integrated LIM Applique (LIM-ILA)
- Multi-Port LIM (MPL)
- Enhanced Integrated LIM Applique (EILA)
- The E1/T1 Multi-Channel Interface Module (MIM)
- High Capacity Multi-Channel Interface Module (HC-MIM)

Procedure

1. Enter the following command to determine which links are serviced by this card.
rept-stat-card:loc=xxxx

Where xxxx is the card location.

The following is an example of the possible output.

```
RLGHNCXA03W 98-09-27 16:43:42 EST  EAGLE 34.0.0
CARD  VERSION      TYPE    APPL      PST           SST       AST
1201  021-002-000  LIMDS0  CCS7ITU   IS-NR         Active    -----
  ALARM STATUS      = *  0022 Clock B for card failed.
  IMT VERSION       = 021-001-000
  PROM VERSION      = 021-001-000
  IMT BUS A         = Conn
  IMT BUS B         = Fault
  SLK A PST         = IS-NR       LS=lsnsspn2  CLLI=-----------
  SLK B PST         = IS-NR       LS=lsnstpi   CLLI=-----------
  SCCP SERVICE CARD = 1212
  SLAN SERVICE CARD = ----
Command Completed.
```

2. Refer to the procedure "Determine LIM, MIM, and MPL Changeout Time" on page A-16" to determine when to change the card.

NOTE: The *inh-slk* command will be rejected if inhibiting the link would cause a DPC to become unavailable.

3. Enter the following command to inhibit the links on both ports of this card (*a* and *b*).

inh-slk:loc=xxxx:port=y

Where xxxx location of the card from Step 1 and y is the port.

---

4. Enter the following command to change the status of the link to out of service - maintenance disabled (*oos-mt-dsbld*). Enter the same location and ports from Step 3.

dact-slk:loc=xxxx:port=y

Where xxxx is the location used in Step 3 and
y is the ports used in Step 3.

---

5. Enter the following command to ensure the signaling link status is *oos-mt-dsbld*.

rept-stat-slk

The following is an example of the possible output.

```
RLGHNCXA03W 98-09-27 17:00:36 EST  EAGLE 34.0.0
rept-stat-slk
SLK    LSN          CLLI        PST          SST       AST
1201,A lsnsspn2     ----------- IS-NR        Avail     ----
1201,B lsnstpi      ----------- OOS-MT-DSBLD LPBK      ----
1202,A lsnstpn      ----------- IS-NR        Avail     ----
1202,B lsnstpi      ----------- IS-NR        Avail     ----
1203,A lsnstpa      ----------- IS-NR        Avail     ----
1203,B lsnscpa      ----------- IS-NR        Avail     ----
1205,A lsnscpi      ----------- IS-NR        Avail     ----
1205,B lsnsspi1     ----------- IS-NR        Avail     ----
1207,A lsnstpa      ----------- IS-NR        Avail     ----
1207,B lsnsspa1     ----------- IS-NR        Avail     ----
1211,A lsnstpn      ----------- IS-NR        Avail     ----
1211,B lsnsspn1     ----------- IS-NR        Avail     ----
Command Completed.
```

---

6. Enter the following command to inhibit the card and disconnect it from the IMT bus.

rmv-card:loc=xxxx

Where xxxx location used in Step 3 and Step 4.

---

7. Enter the following command to retrieve the terminal types and port numbers:

rtrv-trm

---

8. Enter the following command to inhibit each OAP terminal displayed in the output from Step 7:

inh-trm:trm=x:force=yes

where x is the terminal number assigned as type OAP.

---

9. Remove the LIM/MIM/MPL, per the card replacement procedure described in the section titled “Replacing a Card in the EAGLE 5 ISS” on Page A-57. Place the new SS7 LIM into its place. Be sure the revision numbers are compatible (if in doubt, contact Tekelec Technical Services at the appropriate number before replacing the card.

Reference: “Customer Care Center” on page 1-13.

---

10. Enter the following command to download generic program loads and database information from the TDM card to the new LIM/MIM/MPL.

rst-card:loc=xxxx

Where xxxx location used in Step 6.

---

11. Enter the following command to determine which links are serviced by this card.
rept-stat-card:loc=xxxx

Where xxxx is the location of the replaced card.

NOTE: The signaling link alarms will be present until the links are restored in Step 13.

12. Examine the output from Step 11. Refer to Chapter 3, "Corrective Maintenance" to clear any GPL related alarms on the newly replaced card before continuing.

---

13. Enter the following command to return the links to service. Make sure this is done on all links.

act-slk:loc=xxxx:port=y

Where xxxx is the location used in Step 3 and Step 4 and
y is the ports used in Step 3 and Step 4.

---

14. Enter the following command to change the link status to IS-NR. Make sure this is done on both ports, *a* and *b*.

unhb-slk:loc=xxxx:port=y

Where xxxx is the location used in Step 3 and Step 4 and
y is the ports used in Step 3 and Step 4.

---

15. Enter the following command to verify the status of the card and its associated links.

rept-stat-card:loc=xxxx

Where xxxx is the card location.

The following is an example of the possible output.

```
RLGHNCXA03W 98-09-27 16:43:42 EST  EAGLE 34.0.0
CARD  VERSION      TYPE    APPL      PST           SST       AST
1201  024-002-000  LIMDS0  SS7ANSI   IS-NR         Active    -----
  ALARM STATUS      = No Alarms.
  IMT VERSION       = 024-001-000
  PROM VERSION      = 024-001-000
  IMT BUS A         = Conn
  IMT BUS B         = Conn
  SLK A PST         = IS-NR       LS=lsnsspn2  CLLI=-----------
  SLK B PST         = IS-NR       LS=lsnstpi   CLLI=-----------
  SCCP SERVICE CARD = 1212
  SLAN SERVICE CARD = ----
Command Completed.
```

16. Enter the following command to verify the links are properly aligned and are returned to full service.

rept-stat-slk

The following is an example of the possible output.

```
RLGHNCXA03W 98-09-27 17:00:36 EST  EAGLE 34.0.0
rept-stat-slk
SLK    LSN          CLLI        PST          SST       AST
1201,A lsnsspn2     ----------- IS-NR        Avail     ----
1201,B lsnstpi      ----------- OOS-MT-DSBLD LPBK      ----
1202,A lsnstpn      ----------- IS-NR        Avail     ----
1202,B lsnstpi      ----------- IS-NR        Avail     ----
1203,A lsnstpa      ----------- IS-NR        Avail     ----
1203,B lsnscpa      ----------- IS-NR        Avail     ----
1205,A lsnscpi      ----------- IS-NR        Avail     ----
1205,B lsnsspi1     ----------- IS-NR        Avail     ----
1207,A lsnstpa      ----------- IS-NR        Avail     ----
1207,B lsnsspa1     ----------- IS-NR        Avail     ----
1211,A lsnstpn      ----------- IS-NR        Avail     ----
1211,B lsnsspn1     ----------- IS-NR        Avail     ----
Command Completed.
```

17. Enter the following command to return the OAP terminals to the in-service state:

alw-trm:trm=x

where x is the terminal number of the inhibited OAP terminal.

DS0A-LIM, Digital Signal Level-0 Link Interface Module

Figure A-5. DS0A-LIM LEDs

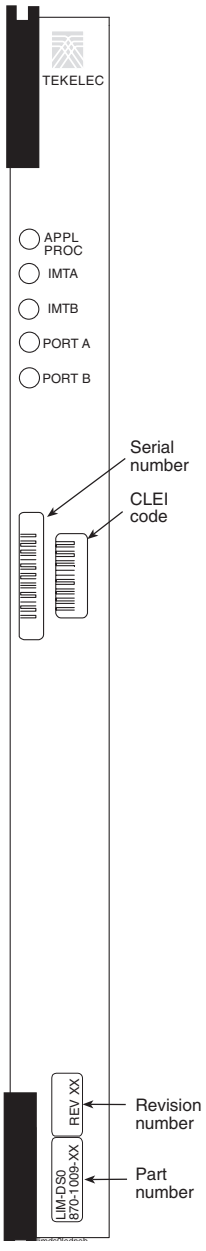

LEDs	Descriptions
APPL PROC	RED – Application processor is not running or is failing diagnostics. AMBER – LIM-DS0A is loading an application or is being polled (may be prevented from loading by maintenance out of service condition). GREEN – LIM-DS0A is running an application.
IMTA	RED – LIM-DS0A is off IMT bus A. AMBER – LIM-DS0A is on IMT bus A, but testing is not complete. GREEN – LIM-DS0A is on IMT bus A. BLANK – Communication processor is not operating.
IMTB	RED – LIM-DS0A is off IMT bus B. AMBER – LIM-DS0A is on IMT bus B, but testing is not complete. GREEN – LIM-DS0A is on IMT bus B. BLANK – Communication processor is not operating.
PORT A	RED – Link is out of service. GREEN – Link is aligned and in service.
PORT B	RED – Link is out of service. GREEN – Link is aligned and in service.

LIM-ATM, LIM-AINF, LIM-E1, LIM, EILA, ILA

ATM Link Interface Module, AINF Link Interface Module, E1 Link Interface Module, Enhanced Integrated LIM AINF, Integrated LIM AINF.

Figure A-6. LIM LEDs

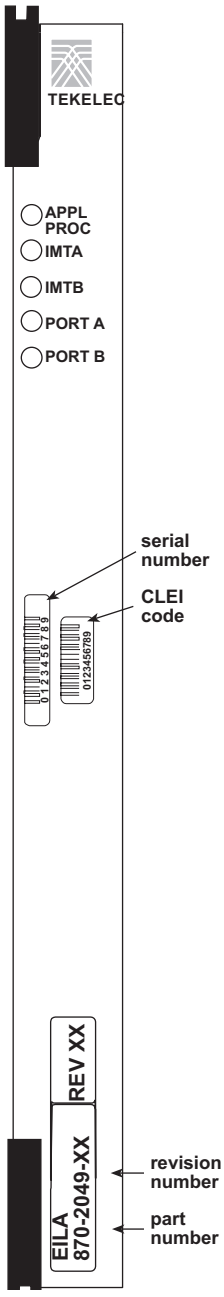

LEDs	Descriptions
APPL PROC	RED – Application processor is not running or is failing diagnostics. AMBER – LIM is loading an application or is being polled (may be prevented from loading by maintenance out of service condition). GREEN – LIM is running an application. RED/GREEN – Operational, no communication with MASP
IMTA	RED – LIM is off IMT bus A. AMBER – LIM is on IMT bus A, but testing is not complete. GREEN – LIM is on IMT bus A. BLANK – Communication processor is not operating.
IMTB	RED – LIM is off IMT bus B. AMBER – LIM is on IMT bus B, but testing is not complete. GREEN – LIM is on IMT bus B. BLANK – Communication processor is not operating.
PORT A	RED – Link is out of service. AMBER – Link is attempting to align GREEN – Link is aligned and in service.
PORT B	RED – Link is out of service. AMBER – Link is attempting to align GREEN – Link is aligned and in service.
IS NR	In service normal

E1/T1 MIM, E1/T1 Multichannel Interface Module

European and North American standard for signaling and channels MIM (Multi-channel Interface Module).

Figure A-7. E1/T1 MIM)

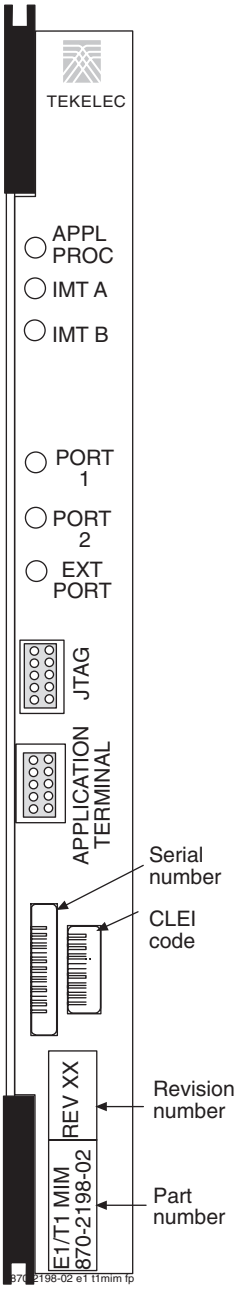

LEDs	Descriptions
APPL PROC	RED – Critical alarm condition detected GREEN – No alarm
IMT A	RED – Major alarm condition detected GREEN – No alarm
IMT B	AMBER – Minor alarm condition detected GREEN – No alarm
PORT 1	AMBER – Card is an E1-T1 Channel Card GREEN – All channels provisioned =ISNR AMBER BLINKING – Any channels provisioned = OOS RED BLINKING – All channels provisioned = OOS RED – No channels are provisioned
PORT 2	AMBER – Card is an E1-T1 Channel Card GREEN – All channels provisioned =ISNR AMBER BLINKING – Any channels provisioned = OOS RED BLINKING – All channels provisioned = OOS RED – No channels are provisioned
EXT PORT	AMBER – Card is an E1-T1 Master Card GREEN – All channels provisioned =ISNR AMBER BLINKING – Any channels provisioned = OOS RED BLINKING – All channels provisioned = OOS RED – No channels are provisioned
OOS	Out of service
IS NR	In service normal

MPL LIM, Multi-Port Link Interface Module

Figure A-8. MPL LEDs

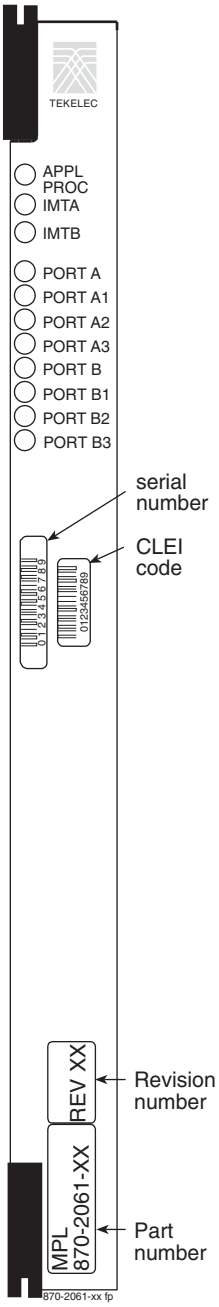

LEDs	Descriptions
APPL PROC	RED – Application processor is not running or is failing diagnostics. AMBER – MPL is loading an application or is being polled (may be prevented from loading by maintenance out of service condition). GREEN – MPL is running an application. RED/GREEN (Alternating) Operational but no communication with MASP
IMTA	RED – MPL is off IMT bus A. AMBER – MPL is on IMT bus A, but testing is not complete. GREEN – MPL is on IMT bus A. BLANK – Communication processor is not operating.
IMTB	RED – MPL is off IMT bus B. AMBER – MPL is on IMT bus B, but testing is not complete. GREEN – MPL is on IMT bus B. BLANK – Communication processor is not operating.
PORT A	RED – Link is out of service. AMBER – Link attached to Port is attempting to align GREEN – Link is aligned and in service. RED/GREEN (alternating) – Link attached to Port is in a loop-back condition.
PORT A1	RED – Link is out of service. AMBER – Link attached to Port is attempting to align GREEN – Link is aligned and in service. RED/GREEN (alternating) – Link attached to Port is in a loop-back condition.
PORT A2	RED – Link is out of service. AMBER – Link attached to Port is attempting to align GREEN – Link is aligned and in service. RED/GREEN (alternating) – Link attached to Port is in a loop-back condition.
PORT A3	RED – Link is out of service. AMBER – Link attached to Port is attempting to align GREEN – Link is aligned and in service. RED/GREEN (alternating) – Link attached to Port is in a loop-back condition.
PORT B	RED – Link is out of service. AMBER – Link attached to Port is attempting to align GREEN – Link is aligned and in service. RED/GREEN (alternating) – Link attached to Port is in a loop-back condition.
PORT B1	RED – Link is out of service. AMBER – Link attached to Port is attempting to align GREEN – Link is aligned and in service. RED/GREEN (alternating) – Link attached to Port is in a loop-back condition.
PORT B2	RED – Link is out of service. AMBER – Link attached to Port is attempting to align GREEN – Link is aligned and in service. RED/GREEN (alternating) – Link attached to Port is in a loop-back condition.
PORT B3	RED – Link is out of service. AMBER – Link attached to Port is attempting to align GREEN – Link is aligned and in service. RED/GREEN (alternating) – Link attached to Port is in a loop-back condition.

MPLT, Multi-Port LIM with Taxi Component

Figure A-9. MPLT LEDs

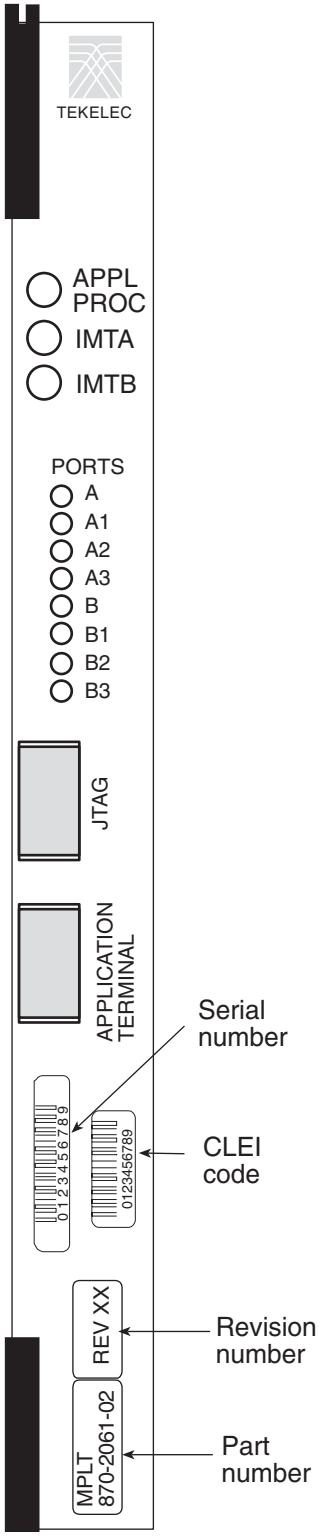

LEDs	Descriptions
APPL PROC	RED – Application processor is not running or is failing diagnostics. AMBER – MPL is loading an application or is being polled (may be prevented from loading by maintenance out of service condition). GREEN – MPL is running an application.
IMTA	RED – MPL is off IMT bus A. AMBER – MPL is on IMT bus A, but testing is not complete. GREEN – MPL is on IMT bus A. BLANK – Communication processor is not operating.
IMTB	RED – MPL is off IMT bus B. AMBER – MPL is on IMT bus B, but testing is not complete. GREEN – MPL is on IMT bus B. BLANK – Communication processor is not operating.
PORT A	RED – Link is out of service. GREEN – Link is aligned and in service.
PORT A1	RED – Link is out of service. GREEN – Link is aligned and in service.
PORT A2	RED – Link is out of service. GREEN – Link is aligned and in service.
PORT A3	RED – Link is out of service. GREEN – Link is aligned and in service.
PORT B	RED – Link is out of service. GREEN – Link is aligned and in service.
PORT B1	RED – Link is out of service. GREEN – Link is aligned and in service.
PORT B2	RED – Link is out of service. GREEN – Link is aligned and in service.
PORT B3	RED – Link is out of service. GREEN – Link is aligned and in service.

HC MIM, High Capacity Multi-channel Interface Module

Figure A-10. HC MIM LEDs

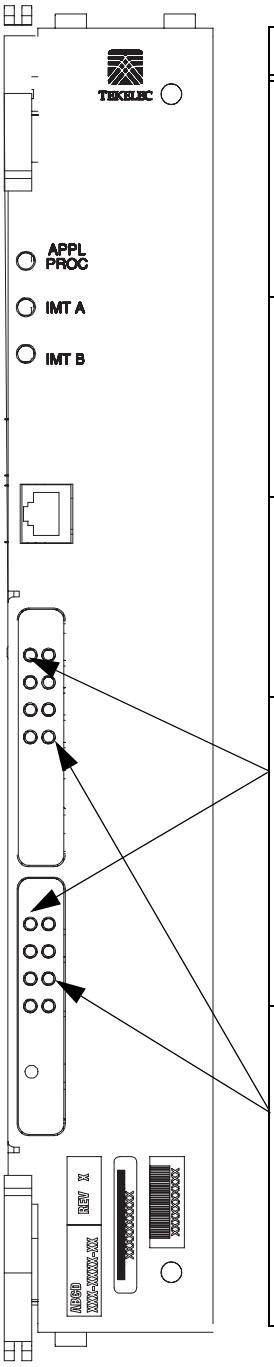

LEDs	Descriptions
APPL PROC	RED – Application processor is not running or is failing diagnostics. AMBER – MPL is loading an application or is being polled (may be prevented from loading by maintenance out of service condition). GREEN – MPL is running an application.
IMT A	RED – MPL is off IMT bus A. AMBER – MPL is on IMT bus A, but testing is not complete. GREEN – MPL is on IMT bus A. BLANK – Communication processor is not operating.
IMT B	RED – MPL is off IMT bus B. AMBER – MPL is on IMT bus B, but testing is not complete. GREEN – MPL is on IMT bus B. BLANK – Communication processor is not operating.
PORT Status	RED – Port not provisioned. RED BLINKING – Loss of signal and remaining errors. AMBER – Remote alarm condition AMBER BLINKING – Loss of Frame Synchronization. GREEN – No alarms, port has acquired timing and framing synchronization
AGGREGATED CHANNEL STATUS	RED – No channels are provisioned. RED BLINKING – All channels provisioned = OOS. AMBER – Indicates port is the “reflected” port in Channel Bridging mode of operation. Applies only to “even” numbered ports AMBER BLINKING – Any channels provisioned = OOS. GREEN – All channels provisioned =ISNR.

X.25 Link Interface Module (LIM)

Description

This Link Interface Module (LIM) provides access to other X.25 via digital links. This card is equipped with an industry standard DS0A, OCU, or V.35 interface.

Procedure

1. Enter the following command to determine which links are serviced by this card.
rept-stat-card:loc=xxxx

Where xxxx is the card location.

The following is an example of the possible output.

```
RLGHNCXA03W 98-09-27 16:43:42 EST  EAGLE 34.0.0
CARD  VERSION      TYPE    APPL      PST           SST       AST
1201  024-002-000  LIMDS0  SS7ANSI   IS-NR         Active    -----
  ALARM STATUS      = *  0022 Clock B for card failed.
  IMT VERSION       = 024-001-000
  PROM VERSION      = 024-001-000
  IMT BUS A         = Conn
  IMT BUS B         = Fault
  SLK A PST         = IS-NR       LS=lsnsspn2  CLLI=-----------
  SLK B PST         = IS-NR       LS=lsnstpi   CLLI=-----------
  SCCP SERVICE CARD = 1212
  SLAN SERVICE CARD = ----
Command Completed.
```

2. Refer to procedure "Determine LIM, MIM, and MPL Changeout Time" on page A-16 to determine when to change the card.

3. Enter the following command to change the status of the link to out of service - maintenance disabled (*oos-mt-dsbld*). Enter the same location and ports from the output in Step 1.

dact-slk:loc=xxxx:port=y

Where xxxx is the card location and
y is the port.

4. Enter the following command to ensure the signaling link status is *oos-mt-dsbld*.

rept-stat-slk

The following is an example of the possible output.

```
RLGHNCXA03W 98-09-27 17:00:36 EST  EAGLE 34.0.0
rept-stat-slk
SLK    LSN          CLLI        PST          SST       AST
1201,A lsnsspn2     ----------- IS-NR        Avail     ----
1201,B lsnstpi      ----------- OOS-MT-DSBLD LPBK      ----
1202,A lsnstpn      ----------- IS-NR        Avail     ----
1202,B lsnstpi      ----------- IS-NR        Avail     ----
1203,A lsnstpa      ----------- IS-NR        Avail     ----
1203,B lsnscpa      ----------- IS-NR        Avail     ----
1205,A lsnscpi      ----------- IS-NR        Avail     ----
1205,B lsnsspi1     ----------- IS-NR        Avail     ----
1207,A lsnstpa      ----------- IS-NR        Avail     ----
1207,B lsnsspa1     ----------- IS-NR        Avail     ----
1211,A lsnstpn      ----------- IS-NR        Avail     ----
1211,B lsnsspn1     ----------- IS-NR        Avail     ----
Command Completed.
```

---

5. Enter the following command to inhibit the card and disconnect it from the IMT bus.

rmv-card:loc=xxxx

where xxxx is the location of the card.

---

6. Enter the following command to retrieve the terminal types and port numbers:

rtrv-trm

---

7. Enter the following command to inhibit each OAP terminal displayed in the output from Step 6:

inh-trm:trm=x:force=yes

where x is the terminal number assigned as type OAP.

---

8. Remove the X.25 LIM, per the card replacement procedure described in the section titled “Replacing a Card in the EAGLE 5 ISS” on page A-57. Place the new X.25 LIM into place. Be sure the revision numbers are compatible (if in doubt, call Tekelec Technical Services at the appropriate number.

Reference: “Customer Care Center” on page 1-13.

---

9. Enter the following command to download generic program loads and database information from the MASP and TSM cards to the new link interface module (LIM).

rst-card:loc=xxxx

Where xxxx is the location used in Step 5.

---

10. Enter the following command to return the links to service. Make sure this is done on both ports, *a* and *b*.

act-slk:loc=xxxx:port=y

Where xxxx is the location used in Step 3 and y is the ports used in Step 3.

---

11. Enter the following command to verify the status of the card and its associated links.

rept-stat-card:loc=xxxx

Where xxxx is the card location.

The following is an example of the possible output.

```
RLGHNCXA03W 98-09-27 16:43:42 EST  EAGLE 34.0.0
CARD  VERSION      TYPE    APPL      PST           SST       AST
1201  024-002-000  LIMDS0  SS7ANSI   IS-NR         Active    -----
  ALARM STATUS      = No Alarms.
  IMT VERSION       = 024-001-000
  PROM VERSION      = 024-001-000
  IMT BUS A         = Conn
  IMT BUS B         = Conn
  SLK A PST         = IS-NR       LS=lsnsspn2  CLLI=-----------
  SLK B PST         = IS-NR       LS=lsnstpi   CLLI=-----------
  SCCP SERVICE CARD = 1212
  SLAN SERVICE CARD = ----
Command Completed.
```

---

12. Enter the following command to verify the links are properly aligned and are returned to full service.

rept-stat-slk

The following is an example of the possible output.

```
RLGHNCXA03W 98-09-27 17:00:36 EST  EAGLE 34.0.0
rept-stat-slk
SLK    LSN          CLLI        PST          SST       AST
1201,A lsnsspn2     ----------- IS-NR        Avail     ----
1201,B lsnstpi      ----------- OOS-MT-DSBLD LPBK      ----
1202,A lsnstpn      ----------- IS-NR        Avail     ----
1202,B lsnstpi      ----------- IS-NR        Avail     ----
1203,A lsnstpa      ----------- IS-NR        Avail     ----
1203,B lsnscpa      ----------- IS-NR        Avail     ----
1205,A lsnscpi      ----------- IS-NR        Avail     ----
1205,B lsnsspi1     ----------- IS-NR        Avail     ----
1207,A lsnstpa      ----------- IS-NR        Avail     ----
1207,B lsnsspa1     ----------- IS-NR        Avail     ----
1211,A lsnstpn      ----------- IS-NR        Avail     ----
1211,B lsnsspn1     ----------- IS-NR        Avail     ----
Command Completed.
```

---

13. Enter the following command to return the OAP terminals to the In-Service state:

alw-trm:trm=x

where x is the terminal number of the inhibited OAP terminal.

Transaction Service Module (TSM) - SCCP

Description

The Translation Service Module (TSM) provides translation capability and Global Title Translation (GTT) implementation for the Local Number Portability (LNP) function by means of one or more identically configured cards per STP node. If more than one TSM is provided in each shelf, they must be powered from different fuse positions and power feeds. The SCCP identifier signifies that this TSM card (Figure A-11) is being used to provide global title translation (GTT).

The TSM provides additional memory for storage of the GTT tables. These tables are downloaded by the terminal disk module (TDM) to the TSM upon power loss or hard reset.

Procedure

1. Enter the following command to determine which cards are in service. This will indicate which link interface modules (LIMs) will be affected by removal of the TSM.

rept-stat-card:loc=xxxx

Where xxxx is the TSM-SCCP card location.

The following is an example of the possible output.

```
RLGHNCXA03W 98-09-27 16:43:42 EST  EAGLE 34.0.0
CARD  VERSION      TYPE    APPL      PST           SST       AST
1212  024-001-000  TSM     SCCP   IS-NR         Active    -----
  ALARM STATUS      = No Alarms.
  IMT VERSION       = 024-001-000
  PROM VERSION      = 024-001-000
  IMT BUS A         = Conn
  IMT BUS B         = Conn
  SLK A PST         = IS-NR       LS=lsnsspn2  CLLI=-----------
  SLK B PST         = IS-NR       LS=lsnstpi   CLLI=-----------
  SCCP SERVICE CARD = 1212
  SLAN SERVICE CARD = ----
Command Completed.
```

2. Enter the following command to determine the number of TSM-SCCP cards in service providing GTT.

rept-stat-sccp:mode=perf

The following is an example of the possible output.

```
RLGHNCXA03W  98-02-04 15:10:19 EST EAGLE 34.0.0
SCCP SUBSYSTEM REPORT IS-NR          Ovflw-1    -----
SCCP Cards Configured=4  Cards IS-NR=4  Capacity Threshold = 100%
CARD   CPU      TOTAL     CLASS 0   CLASS 0   CLASS 1
       USAGE    MSU RATE  TVG RATE  LB RATE   LB RATE
------------------------------------------------------------------------
1217   54%      850       770        50        30
1218   31%      490       400        40        50
4118    5%       80         0        40        40
4211    5%       80         0        80         0
------------------------------------------------------------------------

AVERAGE USAGE: CLASS 0 ATM = 34% CLASS 0 LIM =  6%   CLASS 1 LIM =  4%
AVERAGE MSU USAGE = 44%
AVERAGE CPU USAGE = 24%
TOTAL MSUS:   1500
TOTAL ERRORS:    5
Command Completed.
```

---

3. Enter the following command to remove the TSM-SCCP from service. If this is the last TSM-SCCP card in service, the *:force=yes* parameter must be specified.

rmv-card:loc=xxxx

Where xxxx is the TSM-SCCP card location.

---

4. Enter the following command to retrieve the terminal types and port numbers:

rtrv-trm

---

5. Enter the following command to inhibit each OAP terminal displayed in the output from Step 4:

inh-trm:trm=x:force=yes

where x is the terminal number assigned as type OAP.

---

6. Remove the TSM-SCCP card, per the card replacement procedure described in the section titled “Replacing a Card in the EAGLE 5 ISS” on page A-57. Place the new TSM-SCCP card into its place. Be sure the revision numbers are compatible (if in doubt, call Tekelec Technical Services at the appropriate number.

Reference: “Customer Care Center” on page 1-13.

---

7. Enter the following command Use the *rst-card* command to return the TSM-SCCP card into service. This causes the MASP to begin downloading tables to the new TSM-SCCP card.

rst-card:loc=xxxx

Where xxxx is the TSM-SCCP card location.

When the card has been successfully loaded there will be a response on the terminal that downloading is complete. This can take up to 30 minutes.

---

8. Enter the following command to verify the card is operational and providing SCCP services.

rept-stat-sccp

The following is an example of the possible output.

```
RLGHNCXA03W 98-02-07 16:10:50 EST  EAGLE 34.0.0
SCCP SUBSYSTEM REPORT IS-NR          Active     -----
SCCP Cards Configured= 1  Cards IS-NR= 1  Capacity Threshold = 100%
CARD   VERSION     PST         SST         AST       MSU USAGE  CPU USAGE
------------------------------------------------------------------------
1212   024-001-000 IS-NR       Active      ALMINH       47%         32%
------------------------------------------------------------------------
SCCP Service Average MSU Capacity = 47%       Average CPU Capacity = 32%
Command Completed.
```

---

9. Enter the following command to return the OAP terminals to the in-service state:

alw-trm:trm=x

where x is the terminal number of the inhibited OAP terminal.

TSM

Figure A-11. TSM LEDs

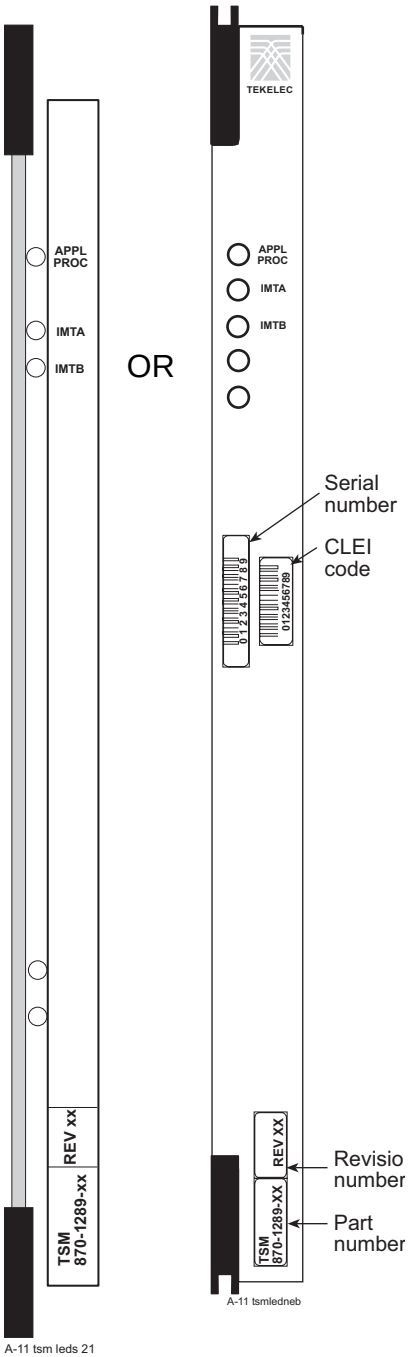

LEDs	Descriptions
APPL PROC - Applications Processor Status	RED - Application processor is not running or is failing diagnostics. AMBER - TSM is loading an application or is being polled (may be prevented from loading by maintenance out of service condition). GREEN - TSM is running an application. RED/GREEN - Operational, no communication with the MASP.
IMT A - IMT Bus A Status	RED - TSM is off IMT bus A. AMBER - TSM is on IMT bus A, but testing is not complete. GREEN - TSM is on IMT bus A. BLANK - Communication processor is not operating.
IMT B - IMT Bus B Status	RED - TSM is off IMT bus B. AMBER - ASM is on IMT bus B, but testing is not complete. GREEN - TSM is on IMT bus B. BLANK - Communication processor is not operating.

Transaction Service Module (TSM) - GLS

Description

The GLS identifier signifies that this TSM card (Figure A-11) is used for downloading gateway screening tables to link interface modules (LIMs). This is used to expedite the downloading process and bring links into service much quicker.

The absence of this card will not effect the gateway screening capability, as the screening takes place on the LIMs and TSM-SCCP cards. This only effects the ability to download screening data to the LIMs and TSM-SCCP cards.

Procedure

1. Enter the following command to identify how many TSM-GLS cards are presently configured for this application:

rept-stat-card

The following is an example of the possible output.

```
RLGHNCXA03W 98-02-04 12:57:21 EST EAGLE 34.0.0
CARD  VERSION       TYPE    APPL      PST       SST       AST
1113  024-102-000   MASP    OAM       IS-NR     Active    -----
1114  ----------    TDM     --------  IS-NR     Active    -----
1115  ----------    MASP    OAM       OOS-MT    Isolated  -----
1116  ----------    TDM     --------  OOT-MT    Isolated  -----
1117  ----------    MDAL    --------  IS-NR     Active    -----
1201  024-102-000   LIM0CU  CCS7ITU   IS-NR     Active    -----
1202  024-001-000   LIMDS0  CCS7ITU   IS-NR     Active    M BIP ERR
1203  024-001-000   LIMDS0  SS7ANSI   IS-NR     Active    -----
1205  024-001-000   LIMDS0  CCS7ITU   IS-NR     Active    M BIP ERR
1207  024-001-000   LIMATM  ATMANSI   IS-NR     Active    -----
1211  024-001-000   LIMATM  ATMANSI   IS-NR     Active    ALMINH
1212  024-001-000   TSM     SCCP      IS-NR     Active    ALMINH
Command Completed.
```

This identifies if removing this card will prevent gateway screening from being loaded to LIMs.

2. Enter the following command to remove this card from service. If this is the last TSM-GLS card in service, th e*:force=yes* parameter must be specified.

rmv-card:loc=xxxx

Where xxxx is the TSM-GLS card location.

3. Enter the following command to retrieve the terminal types and port numbers:

rtrv-trm

4. Enter the following command to inhibit each OAP terminal displayed in the output from Step 3:

inh-trm:trm=x:force=yes

where x is the terminal number assigned as type OAP.

---

5. Remove the TSM-GLS card, per the card replacement procedure described in the section titled "Replacing a Card in the EAGLE 5 ISS" on page A-57. Place the new TSM-GLS card into its place. Be sure the revision numbers are compatible (if in doubt, call Tekelec Technical Services at the appropriate number.

Reference: "Customer Care Center" on page 1-13.

---

6. Enter the following command to begin downloading gateway screening (GWS) data to the new TSM-GLS card:

rst-card:loc=xxxx

Where *xxxx* is the card location.

---

7. Enter the following command to verify the successful download of GWS data and to verify that the new card has returned to service:

rept-stat-card

The following is an example of the possible output.

```
RLGHNCXA03W 98-02-04 12:57:21 EST EAGLE 34.0.0
CARD  VERSION       TYPE    APPL      PST       SST       AST
1113  024-102-000   MASP    OAM       IS-NR     Active    -----
1114  ----------    TDM     --------  IS-NR     Active    -----
1115  ----------    MASP    OAM       OOS-MT    Isolated  -----
1116  ----------    TDM     --------  OOT-MT    Isolated  -----
1117  ----------    MDAL    --------  IS-NR     Active    -----
1201  024-102-000   LIM0CU  CCS7ITU   IS-NR     Active    -----
1202  024-001-000   LIMDS0  CCS7ITU   IS-NR     Active    M BIP ERR
1203  024-001-000   LIMDS0  SS7ANSI   IS-NR     Active    -----
1205  024-001-000   LIMDS0  CCS7ITU   IS-NR     Active    M BIP ERR
1207  024-001-000   LIMATM  ATMANSI   IS-NR     Active    -----
1211  024-001-000   LIMATM  ATMANSI   IS-NR     Active    ALMINH
1212  024-001-000   TSM     SCCP      IS-NR     Active    ALMINH
Command Completed.
```

---

8. Enter the following command to return the OAP terminals to the in-service state:

alw-trm:trm=x

where x is the terminal number of the inhibited OAP terminal.

Database Services Module (DSM) - VSCCP

Description

DSM (Figure A-13) cards are related to the TSM/DCM family, but differ by having an AMD K-6 processor and from 1 to 4 GB of memory on an applique board. The DSM card also differs from the TSM cards by having ethernet ports. The DSMs run a version of the SCCP application that has been ported to the VxWorks OS. To differentiate the DSM-VxWorks-SCCP from the SCCP that runs on the TSM cards, the DSM version has been named VSCCP. The extra memory is required to hold a copy of the RTDB. Ethernet ports are required to connect to the EPAP to download the RTDB. Multiple DSMs are used to provide a means of load balancing in high-traffic situations. Each DSM contains an identical database. Furthermore, the DSM RTDBs need to be identical to the one maintained by the EPAPs.

Procedure

1. Enter the following command to determine which cards are in service. This will indicate which link interface modules (LIMs) will be affected by removal of the DSM card.

rept-stat-card:loc=xxxx

Where xxxx is the DSM-VSCCP card location.

2. Enter the following command to determine the number of DSM-VSCCP cards in service providing GTT.

rept-stat-sccp

The following is an example of the possible output.

```
RLGHNCXA03W  98-02-04 15:10:19 EST EAGLE 34.0.0
SCCP SUBSYSTEM REPORT IS-NR          Active      -----
GSM  SUBSYSTEM REPORT IS-NR          Active      -----
INP  SUBSYSTEM REPORT IS-ANR         Restricted  -----
     ASSUMING MATE'S LOAD
     INPQS: SSN STATUS = Allowed     MATE SSN STATUS  = Prohibited

SCCP Cards Configured= 4  Cards IS-NR= 2  Capacity Threshold = 100%
CARD   VERSION      PST          SST          AST       MSU USAGE  CPU USAGE

------------------------------------------------------------------------------
1212   103-001-000  IS-NR        Active       ALMINH       45%         30%
1301 P 103-001-000  IS-NR        Active       ------       35%         40%
1305   -----------  OOS-MT       Isolated     ------        0%          0%
2112   -----------  OOS-MT-DSBLD Manual       ------        0%          0%

------------------------------------------------------------------------------
SCCP Service Average MSU Capacity = 40%       Average CPU Capacity = 35%

AVERAGE CPU USAGE PER SERVICE:
  GTT   = 15%  GFLEX =  5%  GPORT = 10%
  INPMR =  2%  INPQS =  3%
```

```
TOTAL SERVICE STATISTICS:
  SERVICE    SUCCESS    ERRORS    WARNINGS    FORWARD TO GTT    TOTAL
  GTT:          1995         5           -                 -     2000
  GFLEX:         500         1           4                10      515
  GPORT:         800         0           2                 3      805
  INPMR:          50         5           0                15       70
  INPQS:         499         1           -                 -      500

Command Completed.
```

---

3. Enter the following command to remove the DSM-VSCCP card from service. If this is the last DSM-VSCCP card in service, the *:force=yes* parameter must be specified.

rmv-card:loc=xxxx

where xxxx is the DSM-VSCCP card location.

---

4. Enter the following command to retrieve the terminal types and port numbers:

rtrv-trm

---

5. Enter the following command to inhibit each OAP terminal displayed in the output from Step 4:

inh-trm:trm=x:force=yes

where x is the terminal number assigned as type OAP.

---

6. Remove the DSM-VSCCP card, per the card replacement procedure described in the section titled “Replacing a Card in the EAGLE 5 ISS” on page A-57. Place the new DSM-VSCCP card into its place. Be sure the revision numbers are compatible (if in doubt, call Tekelec Technical Services at the appropriate number.

Reference: “Customer Care Center” on page 1-13.

---

7. Enter the following command to return the DSM-VSCCP card into service:

rst-card:loc=xxxx

Where xxxx is the DSM-VSCCP card location.

This causes the MASP to begin downloading tables to the new DSM-VSCCP card. When the card has been successfully loaded (there will be a response on the terminal that downloading is complete). This can take up to 4 hours.

---

8. Enter the following command to verify the card is operational and providing SCCP services.

rept-stat-sccp

The following is an example of the possible output.

```
RLGHNCXA03W  98-02-04 15:10:19 EST EAGLE 34.0.0
SCCP SUBSYSTEM REPORT IS-NR          Active      -----
GSM  SUBSYSTEM REPORT IS-NR          Active      -----
INP  SUBSYSTEM REPORT IS-ANR         Restricted  -----
     ASSUMING MATE'S LOAD
```

```
     INPQS: SSN STATUS = Allowed     MATE SSN STATUS  = Prohibited

SCCP Cards Configured= 4  Cards IS-NR= 2  Capacity Threshold = 100%
CARD   VERSION      PST          SST          AST       MSU USAGE  CPU USAGE

------------------------------------------------------------------------------
1212   103-001-000  IS-NR        Active       ALMINH       45%         30%
1301 P 103-001-000  IS-NR        Active       ------       35%         40%
1305   -----------  OOS-MT       Isolated     ------        0%          0%
2112   -----------  OOS-MT-DSBLD Manual       ------        0%          0%

------------------------------------------------------------------------------
SCCP Service Average MSU Capacity = 40%       Average CPU Capacity = 35%

AVERAGE CPU USAGE PER SERVICE:
  GTT   = 15%  GFLEX =  5%  GPORT = 10%
  INPMR =  2%  INPQS =  3%

TOTAL SERVICE STATISTICS:
  SERVICE    SUCCESS    ERRORS    WARNINGS    FORWARD TO GTT    TOTAL
  GTT:          1995         5           -                 -     2000
  GFLEX:         500         1           4                10      515
  GPORT:         800         0           2                 3      805
  INPMR:          50         5           0                15       70
  INPQS:         499         1           -                 -      500

Command Completed.
```

9. Enter the following command to return the OAP terminals to the in-service state:

alw-trm:trm=x

where x is the terminal number of the inhibited OAP terminal.

Application Communications Module (ACM)

Description

The ACM (Figure A-12) provides access to a remote host for use by the STP LAN feature. The application communication module (ACM) consists of a 80486-based main assembly and an ethernet applique. Connection to a host is achieved through an ethernet LAN using the TCP/IP protocol.

If this card is removed, the TCP/IP data link supported by this card becomes out of service. Any data to be transmitted to the remote TCP/IP host connected by this TCP/IP data link is lost.

Procedure

1. Enter the following command to determine what TCP/IP data links are configured:

rept-stat-card

2. Enter the following command to determine the status of the TCP/IP data link assigned to the card to be replaced:

rept-stat-dlk

The following is an example of the possible output.

```
RLGHNCXA03W 98-09-27 17:00:36 EST   EAGLE 34.0.0
DLK             PST          SST       AST
1104            IS-NR        Avail     ----
1206            IS-NR        Avail     ALMINH
Command Completed.
```

3. If the status of the TCP/IP data link is not out of service - maintenance disabled (OOS-MT-DSBLD), use the *canc-dlk* command to change the status of the TCP/IP data link to OOS-MT-DSBLD.

canc-dlk:loc=xxxx

where xxxx is the card location.

4. Enter the following command to inhibit the card and disconnect it from the IMT bus. If this is the last ACM in the system, the *:force=yes* parameter must be used with this command.

rmv-card:loc=xxxx

Where xxxx is the card location.

5. Enter the following command to retrieve the terminal types and port numbers:

rtrv-trm

---

6. Enter the following command to inhibit each OAP terminal displayed in the output from Step 5:

inh-trm:trm=x:force=yes

where x is the terminal number assigned as type OAP.

---

7. Remove the ACM, per the card replacement procedure described in the section titled "Replacing a Card in the EAGLE 5 ISS" on page A-57. Place the new ACM into its place. Be sure the revision numbers are compatible (if in doubt, call Tekelec Technical Services at the appropriate number).

Reference: "Customer Care Center" on page 1-13.

---

8. Enter the following command to put the new ACM card back into service and connect it to the IMT bus:

rst-card:loc=xxxx
where *xxxx* = card location.

---

9. Enter the following command to return the TCP/IP data link to service:

act-dlk:loc=xxxx
where *xxxx* = card location.

---

10. Enter the following command to verify the status of the card and its associated TCP/IP data link:

rept-stat-card

---

11. Enter the following command to verify that the TCP/IP data link has returned to full service:

rept-stat-dlk
The following is an example of the possible output.

```
RLGHNCXA03W 98-09-27 17:00:36 EST   EAGLE 34.0.0
DLK             PST          SST       AST
1104            IS-NR        Avail     ----
1206            IS-NR        Avail     ALMINH
Command Completed.
```

---

12. Enter the following command to return the OAP terminals to the in-service state:

alw-trm:trm=x

where x is the terminal number of the inhibited OAP terminal.

ACM, Application Communication Module

Figure A-12. ACM LEDs

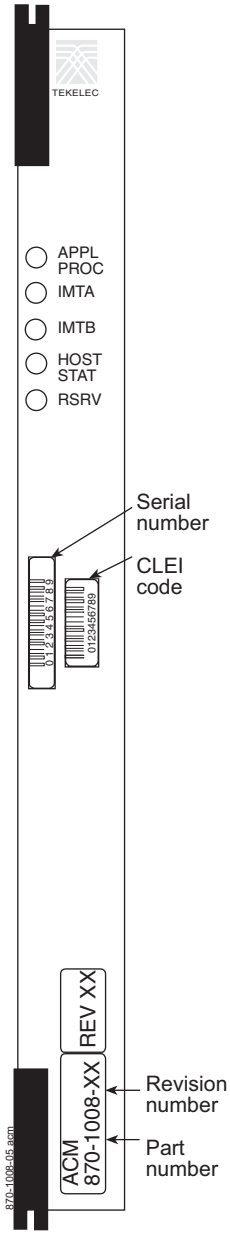

LEDs	Descriptions
APPL PROC – Applications Processor Status	RED – Application processor is not running or is failing diagnostics. AMBER – ACM is loading an application or is being polled (may be prevented from loading by maintenance out of service condition). GREEN – ACM is running an application.
IMT A – IMT Bus A Status	RED – ACM is off IMT bus A. AMBER – ACM is on IMT bus A, but testing is not complete. GREEN – ACM is on IMT bus A. BLANK – Communication processor is not operating.
IMT B – IMT Bus B Status	RED – ACM is off IMT bus B. AMBER – ACM is on IMT bus B, but testing is not complete. GREEN – ACM is on IMT bus B. BLANK – Communication processor is not operating.
HOST STAT – Host Status	RED – Host is not available. GREEN – Host is available.
RSRV – Reserved	Not currently used

Database Communications Module (DCM) and EDCM/EDCM-A

Description

The database communication module (DCM) (Figure A-13) provides access to a remote host for use by the STP LAN feature. The DCM consists of a 80486-based main assembly and an ethernet applique. Connection to a host is achieved through an ethernet LAN using the TCP/IP protocol.

If this card is removed, the TCP/IP data link supported by this card becomes out of service. Any data to be transmitted to the remote TCP/IP host connected by this TCP/IP data link is lost.

The DCM can only be inserted in the odd numbered card slots of the shelf. Slot 09 of each shelf contains the IPMX card; thus the DCM cannot be inserted in slot 09. The DCM can be inserted in the control shelf, but only in slots 01, 03, 05, 07, and 11. Slots 13, 15, and 17 refer to the extension shelf only. The DCM occupies two card slots, so the even numbered card slot adjacent to the odd numbered slot where the DCM has been inserted must be empty as shown in Table A-1. The DCM is connected to the network through the odd numbered card slot connector.

Table A-1. DCM Card Locations

Location of the DCM	Empty Card Location	Location of the DCM	Empty Card Location
Slot 01	Slot 02	Slot 11	Slot 12
Slot 03	Slot 04	Slot 13	Slot 14
Slot 05	Slot 06	Slot 15	Slot 16
Slot 07	Slot 08	Slot 17	Slot 18

The Double-Slot Enhanced Database Communications Module is a version of the DCM that includes more main memory and better processing performance. The double-slot EDCM/EDCM-A can be placed in any odd or even slot that is provisioned. Physically the next higher slot can not be provisioned for a card because of the double-slot EDCM/EDCM-A card width.

The Single-Slot EDCM/EDCM-A (Figure A-20) is a version of the EDCM which requires only a single frame slot. It can be placed in any odd or even slot which has been provisioned for DCM. Otherwise it duplicates the performance of the Double-Slot EDCM/EDCM-A.

Procedure

1. Enter the following command to determine what TCP/IP data links are configured:

   rept-stat-card

2. Enter the following command to determine the status of the TCP/IP data link assigned to the card to be replaced:

rept-stat-dlk
The following is an example of the possible output.

```
RLGHNCXA03W 97-09-27 17:00:36 EST EAGLE 34.0.0
DLK    PST       SST       AST
1104   IS-NR     Avail     ----
1206   IS-NR     Avail     ALMINH
Command Completed.
```

---

3. If the status of the TCP/IP data link is not out of service - maintenance disabled (OOS-MT-DSBLD), use the *canc-dlk* command to change the status of the TCP/IP data link to OOS-MT-DSBLD.

canc-dlk:loc=xxxx

Where xxxx is the card location.

---

4. Enter the following command to inhibit the card and disconnect it from the IMT bus. If this is the last DCM in the system, the *:force=yes* parameter must be used with this command.

rmv-card:loc=xxxx

Where xxxx is the card location.

---

5. Enter the following command to retrieve the terminal types and port numbers:

rtrv-trm

---

6. Enter the following command to inhibit each OAP terminal displayed in the output from Step 5:

inh-trm:trm=x:force=yes

where x is the terminal number assigned as type OAP.

---

7. Remove the DCM, per the card replacement procedure described in the section titled "Replacing a Card in the EAGLE 5 ISS" on page A-57. Place the new DCM into its place. Be sure the revision numbers are compatible (if in doubt, call Tekelec Technical Services at the appropriate number.

Reference: "Customer Care Center" on page 1-13.

---

8. Enter the following command to put the new DCM card back into service and connect it to the IMT bus:

rst-card:loc=xxxx
where *xxxx* = card location.

---

9. Enter the following command to return the TCP/IP data link to service:

act-dlk:loc=xxxx
where *xxxx* = card location.

---

10. Enter the following command to verify the status of the card and its associated TCP/IP data link:

rept-stat-card

---

11. Enter the following command to verify that the TCP/IP data link has returned to full service:

rept-stat-dlk
The following is an example of the possible output.

```
RLGHNCXA03W 97-09-27 17:00:36 EST EAGLE 34.0.0
DLK    PST       SST       AST
1104   IS-NR     Avail     ----
1206   IS-NR     Avail     ALMINH
Command Completed.
```

---

12. Enter the following command to return the OAP terminals to the in-service state:

alw-trm:trm=x

where x is the terminal number of the inhibited OAP terminal.

DCM, Database Communications Module;
DSM, Database Service Module

Figure A-13. DCM and DSM LEDs

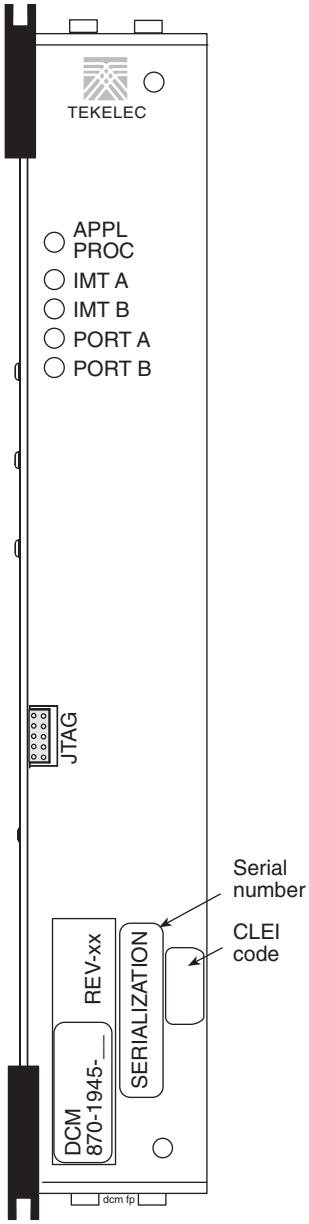

LEDs	Descriptions
APPL PROC	RED – Critical alarm condition detected. GREEN – No alarm
IMT A	RED – Major alarm condition detected. GREEN – No alarm
IMT B	AMBER – Minor alarm condition detected. GREEN – No alarm
PORT A	GREEN – PORT A is the active PORT. RED – PORT A is inactive
PORT B	GREEN – PORT B is the active PORT. RED – PORT B is inactive.

EDCM and EDCM-A (Single-Slot), Enhanced Database Communications Module (Single-Slot)

Figure A-14. EDCM and EDCM-A Single-Slot LEDs

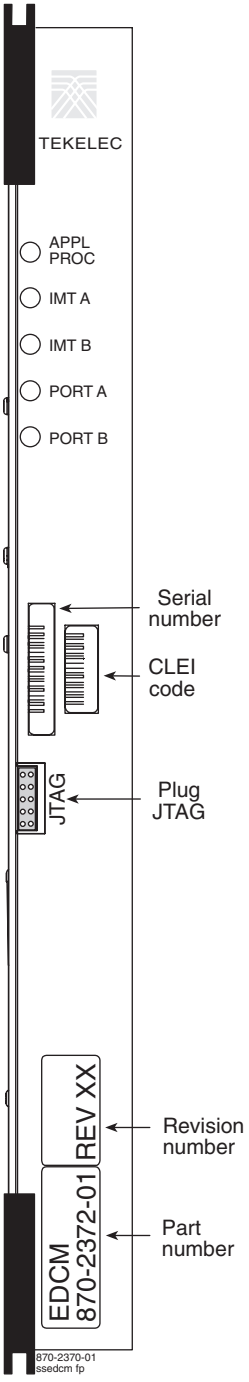

LEDs	Descriptions
APPL PROC	RED – Critical alarm condition detected. GREEN – No alarm
IMT A	RED – Major alarm condition detected. GREEN – No alarm
IMT B	AMBER – Minor alarm condition detected. GREEN – No alarm
PORT A	GREEN – PORT A is the active PORT. RED – PORT A is inactive.
PORT B	GREEN – PORT B is the active PORT. RED – PORT B is inactive.

Terminal Disk Module (TDM)/TDM-GTI

Description

This procedure is to replace a TDM which is part of a MASP, comprised of a GPSM II and a TDM. Before the TDM is replaced, it must be verified that the TDM belongs to the standby MASP (verify the TDM to be replaced is the STDBY TDM and MASP).

The TDM (Figure A-21) contains the fixed disk drive, the terminal processor for the 16 serial I/O ports, and an interface to the maintenance disk and alarm (MDAL) card. This procedure will replace the standby TDM.

Procedure

1. Before beginning this procedure, make sure there is a copy of the current release GPLs on a removable cartridge on-hand.

2. Enter the following command to display the card status:

rept-stat-card

The following is an example of the possible output.

```
RLGHNCXA03W 03-08-18 12:57:21 EST EAGLE 34.0.0

CARD   VERSION      TYPE      APPL       PST           SST        AST
1109   125-016-000  HMUX      BPHMUX     IS-NR         Active     -----
1110   125-016-000  HMUX      BPHMUX     IS-NR         Active     -----
1113   125-020-000  GPSM      EOAM       IS-NR         Standby    -----
1114   -----------  TDM                  IS-NR         Active     -----
1115   125-020-000  GPSM      EOAM       IS-NR         Active     -----
1116   -----------  TDM                  IS-NR         Active     -----
1117   -----------  MDAL                 IS-NR         Active     -----
1209   125-016-000  HMUX      BPHMUX     IS-NR         Active     -----
1210   125-016-000  HMUX      BPHMUX     IS-NR         Active     -----
1301   125-020-000  LIME1     SS7ANSI    IS-NR         Active     -----
1303   125-020-000  LIME1     CCS7ITU    IS-NR         Active     -----
1305   125-020-000  LIME1     SS7ANSI    IS-NR         Active     -----
1307   125-020-000  LIME1     CCS7ITU    IS-NR         Active     -----
1309   125-016-000  HIPR      HIPR       IS-NR         Active     -----
1310   023-018-006  HIPR      HIPR       IS-NR         Active     -----
;
```

In this sample output, 1113/1114 are standby and 1115/1116 are active. Perform Step 4 only if the card to be replaced is not Standby.

3. From the output of the *rept-stat-card* command, executed in Step 2, determine the MASP activity.

Record which GPSM is Active and Standby.

Record the card locations of both sets of GPSMs and TDMs.

- Active GPSM _____
- Active TDM _____
- Standby GPSM _____
- Standby TDM _____

---

4. Verify the card to be replaced (failing or non-failing) is `Standby` before continuing. If the card is failing it should already be `Standby`. Enter the following commands to verify the database and force the active GPSM-II card to become `Standby`:

rept-stat-db:display=all
Verify all the cards in the system have the same database count. If the counts do not match, call "Customer Care Center" on page 1-13 at the appropriate number.

init-card:loc=x

where **x** is the Active card location (1113 or 1115) recorded in Step 3.

---

5. If Step 4 was performed, execute the *rept-stat-card* command and verify if the card to be replaced is part of the Standby MASP.

WARNING: Do not proceed to Step 8 if the backup fails. Contact "Customer Care Center" on page 1-13 at the appropriate number.

6. If a failing TDM card is to be replaced, perform a database backup before replacing the failed card. Insert the removable cartridge with the current release GPLs into the MDAL. Using the Backup the Database (Daily) procedure in Chapter 2, create a backup of the database on the removable cartridge. Then go to Step 8.

---

7. If a non-failing TDM card is to be replaced, insert the removable cartridge containing the copy of the current release GPLs into the MDAL.

NOTE: Step 8 through Step 10 are only necessary for OAP based EAGLE 5 ISSs.

8. Enter the following command to retrieve the terminal types and terminal numbers:

rtrv-trm

---

9. Enter the following command to inhibit each OAP terminal displayed in the output from Step 8:

inh-trm:trm=x

where x is the terminal number.

---

10. Enter the following command for each terminal inhibited in Step 9 to temporarily change the terminal type from OAP to *none*:

chg-trm:trm=x:type=none

where x is the terminal number.

---

11. Enter the following command to verify that the databases in the current (FD CRNT) and the backup (FD BKUP) partitions of the active MASP match:

rept-stat-db:display=version

The following is an example of the possible output.

```
RLGHNCXA03W 03-08-27 03:46:39 EST  EAGLE 34.0.0
DATABASE STATUS: >> OK <<
        TDM 1114 ( ACTV )                 TDM 1116 ( STDBY)
        C   LEVEL    TIME LAST BACKUP     C   LEVEL    TIME LAST BACKUP
        - -------- ---------------------- - --------   -------------------
FD BKUP Y       43 03-08-14 03:02:18 EST  Y       43   03-08-14 03:02:18 EST
FD CRNT Y       79                        Y       79
       MDAL 1117
       - --------
RD BKUP Y        1     -        -

CARD/APPL  LOC   C  T  LEVEL       TIME LAST UPDATE   VERSION STATUS
---------  ----  -  -  ----------  -----------------  ------------------
TDM-CRNT   1114  Y  N  79          03-08-27 00:56:30  121-000-000  NORMAL
TDM-BKUP   1114  Y  -  43          03-08-14 01:10:46  121-000-000  NORMAL
TDM-CRNT   1116  Y  N  79          03-08-27 00:56:30  121-000-000  NORMAL
TDM-BKUP   1116  Y  -  43          03-08-14 01:10:46  121-000-000  NORMAL
MDAL       1117  Y  -  79          03-08-27 00:56:30  121-000-000  NORMAL
```

---

12. Compare the `VERSION STATUS` of the TDM cards in the output of the previous step. If they are identical, continue to the next step. If they are not the same, go to Step 20.

---

13. Enter the following command to show the version numbers of the GPLs stored on each fixed disk (TDM):

rtrv-gpl

The following is an example of the possible output.

```
RLGHNCXA03W 03-08-27 03:46:48 EST  EAGLE 34.0.0
GPL Auditing  ON

APPL      CARD  RELEASE      APPROVED         TRIAL        REMOVE TRIAL
EOAM      1114  121-002-000  121-002-000      121-002-000  121-002-000
EOAM      1116  121-002-000  121-002-000      121-002-000  -----------
SS7ANSI   1114  121-002-000  121-002-000      121-002-000  121-002-000
```

```
SS7ANSI   1116  121-002-000  121-002-000      121-002-000  -----------
SCCP      1114  121-002-000  074-002-005 ALM  121-002-000  121-002-000
SCCP      1116  121-002-000  121-002-000      121-002-000  -----------
GLS       1114  121-002-000  121-002-000      121-002-000  121-002-000
GLS       1116  121-002-000  121-002-000      121-002-000  -----------
MPLG      1114  121-002-000  121-002-000      121-002-000  151-002-000
MPLG      1116  121-002-000  121-002-000      121-002-000  -----------
```

14. Examine the output of the previous step. If any card shows an alarm (ALM), go the Step 20. If no alarms are displayed, continue with Step 15.

15. Enter the following command to verify that the security log on the standby MASP contains no entries that must be copied to the FTA area of the fixed disk:

rept-stat-seculog

The following is an example of the possible output.

```
RLGHNCXA03W 96-10-04 15:59:06 EDT EAGLE 34.0.0
             -- SINCE LAST UPLOAD --  OLDEST   NEWEST   LAST
LOC  ROLE    ENTRIES %FULL OFLO FAIL  RECORD   RECORD   UPLOAD
1114 Active  8312    84    No   No    95-08-12 96-01-04 96-12-16
                                      11:23:56 15:59:06 14:02:22

1116 Standby 693     7     No   No    95-09-12 95-09-30 95-09-30
                                      11:24:12 14:00:06 14:02:13
```

If the number shown in the *ENTRIES* field for the standby MASP (shown with the entry *Standby* in the *ROLE* field) is 0, go to Step 16.

If the number shown in the *ENTRIES* field for the standby MASP is greater than 0, these entries must be copied to the FTA area of the fixed disk. To copy these entries, go to the next step. Copy the security log entries on the standby MASP to the FTA area on the fixed disk with the *copy-seculog* command. For this example, enter the *copy-seculog:slog=stb* command. The following is an example of the message that should appear.

```
RLGHNCXA03W 96-10-04 15:59:06 EDT EAGLE 34.0.0
Security log on TDM 1116 copied to file 961004s.log on TDM 1114
```

16. Replace the Standby TDM, according to the card replacement procedure described in the section titled “Replacing a Card in the EAGLE 5 ISS” on page A-57.

- Unseat the standby GPSM card determined in Step 3.
- Remove the standby TDM card determined in Step 3.
- Insert the spare TDM card.
- Re-seat the standby GPSM card.

NOTE: UAMs are generated during this step. An audible alarm is generated. Wait for the standby GPSM/spare TDM to come up to standby mode.

17. Enter the following command to display the status of the standby GPSM:

rept-stat-card:loc=xxxx

where xxxx is the standby GPSM from the output recorded in Step 3.

The following is an example of the possible output.

```
RLGHNCXA03W 03-08-18 13:10:21 EST EAGLE 34.0.0
CARD  VERSION       TYPE    APPL      PST       SST       AST
xxxx  xxx-xxx-xxx   GPSM    EAOM      IS-NR     Standby   DB-DIFF
  ALARM STATUS       = No Alarms.
  IMT    VERSION     = 025-015-000
  PROM   VERSION     = 023-002-000
  IMT BUS A          = Conn
  IMT BUS B          = Conn
Command Completed.
```

NOTE: Verify that backup goes to IS-NR status.

18. Enter the following command to retrieve GPL versions:

rtrv-gpl

The following is an example of the possible output.

```
RLGHNCXA03W 03-08-27 03:46:48 EST  EAGLE 34.0.0
GPL Auditing  ON

APPL      CARD  RELEASE      APPROVED         TRIAL        REMOVE TRIAL
EOAM      1114  xxx-xxx-xxx  xxx-xxx-xxx      xxx-xxx-xxx  -----------
EOAM      1116  xxx-xxx-xxx  xxx-xxx-xxx      xxx-xxx-xxx  xxx-xxx-xxx
SS7ANSI   1114  xxx-xxx-xxx  xxx-xxx-xxx      xxx-xxx-xxx  -----------
SS7ANSI   1116  xxx-xxx-xxx  xxx-xxx-xxx      xxx-xxx-xxx  xxx-xxx-xxx
SCCP      1114  xxx-xxx-xxx  xxx-xxx-xxx      xxx-xxx-xxx  -----------
SCCP      1116  xxx-xxx-xxx  xxx-xxx-xxx      xxx-xxx-xxx  xxx-xxx-xxx
GLS       1114  xxx-xxx-xxx  xxx-xxx-xxx      xxx-xxx-xxx  -----------
GLS       1116  xxx-xxx-xxx  xxx-xxx-xxx      xxx-xxx-xxx  xxx-xxx-xxx
MPLG      1114  xxx-xxx-xxx  xxx-xxx-xxx      xxx-xxx-xxx  -----------
MPLG      1116  xxx-xxx-xxx  xxx-xxx-xxx      xxx-xxx-xxx  xxx-xxx-xxx
```

19. Enter the following command to repair the standby's TDM database.

chg-db:action=repair

NOTE: The system requires approximately two minutes after Step 17 to acquire duplex mode. As a result the system will reject the *chg-db:action= repair* until duplex operation fully returns.

The following is an example of the possible output.

```
RLGHNCXA03W 03-08-27 03:46:49 EST  EAGLE 34.0.0
chg-db:action=repair
Command entered at terminal #10.
;

RLGHNCXA03W 03-08-27 03:46:50 EST  EAGLE 34.0.0
REPAIR: MASP A - Repair starts on standby MASP.
;
```

NOTE: Observe that the command execution time may require approximately 20 to 45 minutes.

```
RLGHNCXA03W 03-08-27 04:15:22 EST  EAGLE 34.0.0
REPAIR: MASP A - Repair from fixed disk complete.
;
```

Wait for the 'repair complete' message to display and for the MASP return to in-service status.

When the 'repair complete' message has displayed, proceed to Step 25.

NOTE: Perform this step only if you are coming from Step 12 or Step 14.

20. Enter the following command to verify whether measurement collection is on or off:

rtrv-meas-sched

The following is an example of the possible output. The *COLLECT* field shows whether measurement collection is on or off. In this example, measurement collection is on.

```
RLGHNCXA03W 95-04-03 12:22:55 EST EAGLE 34.0.0
COLLECT        =  on
---------------------
SYSTOT-STP     =  off
SYSTOT-TT      =  off
SYSTOT-STPLAN  =  on
COMP-LNKSET    =  off
COMP-LINK      =  on
MTCD-STP       =  on
MTCD-LINK      =  on
MTCD-STPLAN    =  on
```

If measurement collection is on, continue with Step 21. If measurement collection is off, proceed to Step 22.

---

21. Enter the following command to inhibit all measurements:

chg-meas:collect=off

CAUTION: Measurements must be inhibited or the *copy-disk* command cannot be executed. The *chg-meas:collect=on* command should not be executed while the *copy-disk* command is in progress. When measurements are inhibited, measurement collection is stopped. For the entire period of time when measurements are inhibited, those measurements will be lost. If possible, do not inhibit measurements at midnight since doing so can result in the loss of measurements for an entire day. The following message should appear.

```
RLGHNCXA03W 94-02-07 16:12:50 EST  EAGLE 34.0.0
CHG-MEAS: MASP A - COMPLTD
```

22. Replace the Standby TDM, according to the card replacement procedure described in the section titled "Replacing a Card in the EAGLE 5 ISS" on page A-57.

- Unseat the standby GPSM card determined in Step 3.
- Remove the standby TDM card determined in Step 3.
- Insert the spare TDM card.
- Re-seat the standby GPSM card.

NOTE: UAMs are generated during this step. An audible alarm is generated. Wait for the standby GPSM/spare TDM to come up to standby mode.

23. Enter the following *copy-disk* command along with the card location of the standby TDM (shown by the indicator *STDBY* in the *rept-stat-db* command output in Step 11) that the data is being copied to. This command can take from 33 minutes to 1 hour 46 minutes to execute. It can take even longer depending on other system activity in progress when this command is entered.

copy-disk:dloc=xxxx:format=no

Where *xxxx* is the card location of the standby TDM.

The following is an example of the message that should appear when the command has executed and completed. For this example, the *copy-disk:dloc=1116* command was entered.

```
Copy-disk (fixed): from active (1114) to standby (1116) started.
Extended processing required, please wait.


Copy-disk (fixed): from active (1114) to standby (1116) completed.
Measurements collection may be turned on now if desired.
```

The standby MASP is rebooted to load the data when the command completes successfully.

NOTE: While this command is executing, commands that affect the database configuration cannot be executed. Any attempt to execute such a command will be rejected.

24. If measurement collection was turned off in Step 21, enter the following command to turn on the measurements:

chg-meas:collect=on

The following message should appear.

```
RLGHNCXA03W 94-02-07 16:12:50 EST  EAGLE 34.0.0
CHG-MEAS: MASP A - COMPLTD
```

---

25. Enter the following command to verify that the database counts of both MASPs.

rept-stat-db:display=all

---

26. After the card has been reloaded (a message appears to confirm completion of the load), enter the following command to verify the database is consistent (same level as the other cards in the system).

rept-stat-card

---

27. Enter the following command to restore the OAP terminals changed in Step 10:

chg-trm:trm=x:type=oap

where x is the terminal number.

---

28. Enter the following command to return the OAP terminals inhibited in Step 9 to the in-service state:

alw-trm:trm=x

where x is the terminal number.

TDM-GTI, Terminal Disk Module-Global Timing Interface

The Terminal Disk Module supports Global Timing Interface (TDM-GTI)

Figure A-15. TDM LED

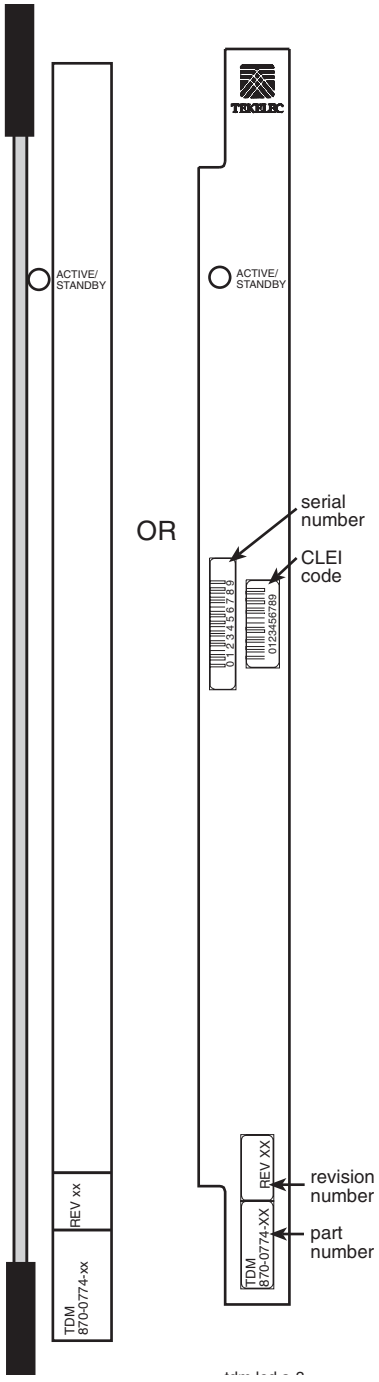

LED	Descriptions
STATUS	RED – Card is resetting, hardware and software are not currently configured. GREEN – OAM application is running and this MASP is primary. GREEN/AMBER – OAM application is running and this MASP is in standby mode.

NOTE: LED state is not defined if the associated GPSM ll is resetting, is not installed, or has failed.

Measurement Collection and Polling Module (MCPM)

Description

The primary MCPM card performs all measurements collection and reporting functions and provides on-card RAM storage for collected data and scheduled reports. The Secondary MCPM provides a redundant backup for the Primary card, and assumes collection and reporting responsibilities on the loss of the Primary. TCP/IP connections are used to deliver measurement reports from the Primary MCPM card to the customer via an FTP client. The FTP configuration can be customized to support automatic transfer of scheduled reports from the client to the server.

Procedure

1. Enter the following command to determine the status of the MCPM cards.

rept-stat-meas

2. Enter the following command to remove the faulty MCPM card from service. If this is the last MCPM card in service, the*:force=yes* parameter must be specified.

rmv-card:loc=xxxx

Where xxxx is the MCPM card location.

3. Remove the MCPM card, per the card replacement procedure described in the section titled “Replacing a Card in the EAGLE 5 ISS” on page A-57. Place the new MCPM card into its place. Be sure the revision numbers are compatible (if in doubt, call Tekelec Technical Services at the appropriate number.

Reference: “Customer Care Center” on page 1-13.

4. Enter the following command to return the MCPM card into service. This causes the MASP to begin downloading tables to the new MCPM card.

rst-card:loc=xxxx

Where xxxx is the MCPM card location.

When the card has been successfully loaded there will be a response on the terminal that downloading is complete. Normally this should take up to 20 minutes.
NOTE: If the card has not loaded in 30 minutes, enter the *init-card* command to re-boot the MCPM card.

5. Enter the following command to verify the card is operational.

rept-stat-meas

Replacing a Card in the EAGLE 5 ISS

Use this procedure anytime a card is removed from the EAGLE 5 ISS. Failure to use this procedure may result in equipment damage. Use the procedures at the beginning of this section before physically removing any cards.

WARNING: Before performing any maintenance procedures on the EAGLE 5 ISS, make sure you wear a wrist strap connected to the wrist strap grounding point of the EAGLE 5 ISS System.

Before removing, reseating, or initializing a card, inhibit any OAP terminal ports that are in-service normal (IS-NR) to assure the card loads properly. No database updates or single command line entries should be made while the card is loading.

WARNING: This procedure may interrupt service. When possible, perform maintenance during low traffic and database provisioning periods, such as the maintenance window.

Procedure

1. Locate the card to be removed.

2. Use both hands to open injector/ejector module locking tabs out from the faceplate of the card. Push the inject/eject clamps outward from the card's faceplate (top clamp in the "UP" position, bottom clamp in the "DOWN" position). Pull the levers away from the shelf until they are parallel to the floor. Gently pull the card towards you until the card clears the shelf.

Figure A-16. Push Inject/Eject Clamps Outward

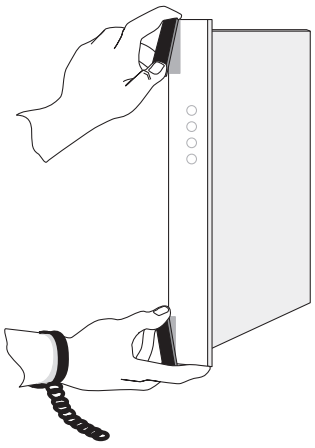

3. Place the card you have removed in an electrostatic discharge (ESD) protective container, or place the card in the spare card storage shelf.

4. Be sure that the replacement card has the same Tekelec part number and revision number as the card you have just removed (unless this is an upgrade).

5. Open the ejector levers on the replacement card. Carefully align the card's edges with the top and bottom card guides. Then push the card along the length of the card guides until the rear connectors on the card engage the mating connectors on the target shelf backplane.

6. Press the left edge of the card's faceplate using constant pressure until you feel the card's progress cease. To ensure proper seating, the tabs must be held in the release position until the locking tabs can engage with the upper and lower flange on the shelf.

WARNING: Do not impact the faceplate in order to mate the connectors. Any impact to the card's faceplate can damage the faceplate, the pins, or the connectors.

7. Push in the top and bottom inject/eject clamps. This locks the card in place and ensures a strong connection with the pins on the target shelf backplane.

Figure A-17. Push in Inject/Eject Clamps

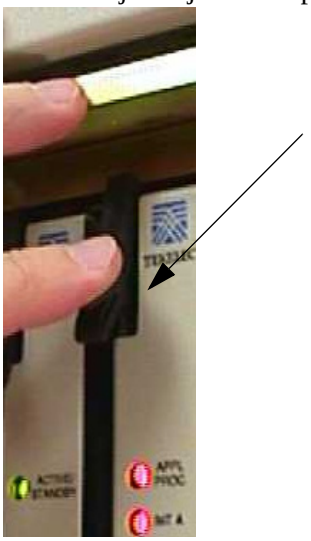

8. Verify that both IMT bus LEDs are green.

9. Record the activity in the site maintenance log.

Replacing Cards in the Holdover Clock

Failed Clock Input (CI) Card Replacement

Description

Use this procedure to replace a failed clock input (CI) card in shelves equipped with ST3 clock cards. The input card FAIL lamp should be lit.

Procedure

1. If the shelf is equipped with ST3 cards and the input card FAIL lamp is not lit, check the status of the SRC ACT/SRC ACTIVE lamp. If lit, press the transfer (XFR) button on either input card. If the input card FAIL lamp is lit, go to Step 3. The SRC ACT/SRC ACTIVE lamp on the other input card lights and the lamp goes off. Enter the following command to retrieve the terminal types and port numbers:

   rtrv-trm

2. Enter the following command to inhibit each OAP terminal displayed in the output from Step 1:

   inh-trm:trm=x:force=yes

   where x is the terminal number assigned as type OAP.

3. Remove the failed card or the card to be removed from the shelf.

4. Set the option switches on the replacement card to the correct settings. (See the *Installation Manual*.) Wait for the input card to acquire the input reference signal (about 40 seconds). Then, press the XFR button to make the new input card active.

5. Enter the following command to return the OAP terminals to the in-service state:

   alw-trm:trm=x

   where x is the terminal number of the inhibited OAP terminal.

CI, Clock Interface Card, Holdover Clock

Figure A-18. Holdover Clock CI Card LEDs

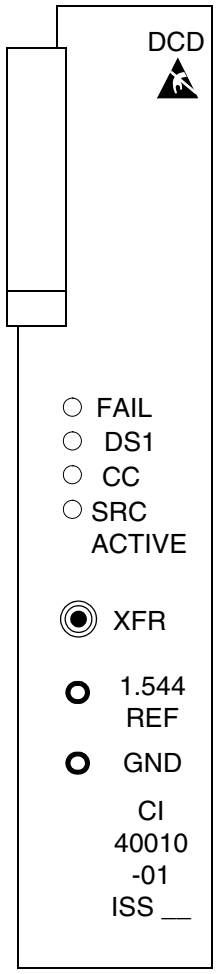

LEDs	Descriptions
FAIL	RED – This card or its input has failed. The card's output is disabled and a minor alarm is generated. BLANK – No card or input failure detected.
DS1	GREEN – DS1 source is present. BLANK – DS1 source is not present.
CC	GREEN – CC (composite clock) source is present. BLANK – CC source is not present.
SRC ACTIVE	GREEN – The card is on-line providing a DCD reference to ST3 and output cards. BLANK – Card is in standby mode.

Non-Failed Clock Input (CI) Card Replacement

Description

Use this procedure to replace non-failed clock input (CI) cards which have valid input reference signals.

Procedure

CAUTION: Removing a non-failed clock input card with a valid input reference signal from a shelf equipped with ST3 cards, causes the DCD system outputs to run and hit all the network elements timed from the DCD system. To properly remove a non-failed clock input card, the input reference must be removed first. This squelches the CI card output. This does not apply to failed input cards.

1. Remove the input reference signal to the shelf associated with the clock input card to be removed. Perform one of the following:

   a. If the reference input has a miscellaneous SYNC jack at the DSX-1, insert an open plug or the end of a patch card in the SYNC jack to squelch the input reference signal.

   b. If the input reference has an external bridging repeater, insert an open plug or the end of a patch cord in the OUT jack at the bridging repeater to squelch the input reference signal.

   c. If the input reference signal is directly cabled from the source to the DCD shelf, either lift the leads of the TB12 or TB13 wire-wrap terminals on the backplane of the DCD shelf, or short the tip (T) and ring (R) together at TB12 or TB13 on the backplane.

CAUTION: Use a clip cord that is no longer than two inches. A longer clip cord may not appear as a short to the CI card and the input reference may continue to drive it.

The DS1 lamp should be off and the FAIL lamp lit on the CI card. If this is not true, do not proceed. This indicates the input reference has not been removed.

2. Enter the following command to retrieve the terminal types and port numbers:

   rtrv-trm

3. Enter the following command to inhibit each OAP terminal displayed in the output from Step 2:

   inh-trm:trm=x:force=yes

   where x is the terminal number assigned as type OAP.

4. Remove the CI card. This has no effect on the outputs.

5. Set the option switches on the replacement card to the correct settings. (See the *Installation Manual*.) The DS1 lamp should be off and the FAIL lamp lit on the CI card.

6. Restore the input reference by removing the open plug, clip cord, or reconnecting the leads to TB12 or TB13 wire-wrap terminals on the DCD shelf backplane.

7. Wait for the input card to acquire the input reference signal (about 40 seconds). If you want the new CI card to be active, press the XFR button.

8. Enter the following command to return the OAP terminals to the in-service state:

   alw-trm:trm=x

   where x is the terminal number of the inhibited OAP terminal.

ST3 Card Replacement

Description

Use this procedure to replace ST3 cards. The only time an ST3 card should be replaced is if the FAIL lamp is lit, or if it is in the ST A slot, and the LOCK or LOCK and FAIL lamps are not lit and the network elements receiving timing from the shelf are reporting slips. (However, the second condition is more likely a timing loop rather than a bad ST3 card.)

NOTE: The ST3 card in slot B (ST B) in shelves equipped with ST3 clock cards may be removed from the shelf without any negative effect to the output, regardless if the ST3 has failed. If an ST3 is installed and not failed in slot A (ST A), it is the preferred source for the output cards. If you remove the card from the shelf, it may cause a hit to the outputs.

Procedure

1. Enter the following command to retrieve the terminal types and port numbers:

   rtrv-trm

2. Enter the following command to inhibit each OAP terminal displayed in the output from Step 1:

   inh-trm:trm=x:force=yes

   where x is the terminal number assigned as type OAP.

---

3. Remove the ST3 card from the shelf. If it is in slot A and has not failed, the ST B clock card automatically become the preferred source for the outputs. The TO cards ST and INPUT lamps should remain green.

   NOTE: There may be a one-time phase hit to the outputs. If ST A has failed, the ST B clock card is already the preferred source for the outputs. If ST B is being replaced, it is in standby and may be removed without negative effect to the outputs.

---

4. Insert the replacement card in the shelf. Lock it into place by rotating the locking lever downward. The FAIL lamp should remain lit until it has acquired the frequency and phase of the input reference signal and then go off (about one minute). If ST A is being replaced, it automatically becomes the preferred source for the output when the FAIL and LOCK lamps go off. The TO cards ST and INPUT lamps should remain lit.

   NOTE: If you are replacing both ST3 cards, allow five minutes for the first card to stabilize before replacing the other.

---

5. Enter the following command to return the OAP terminals to the in-service state:

   alw-trm:trm=x

   where x is the terminal number of the inhibited OAP terminal.

ST3, Stratum-3 Clock Card, Holdover Clock

Figure A-19. Holdover clock ST3 card LEDs

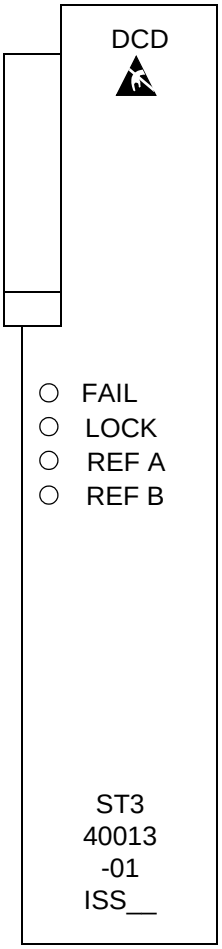

LEDs	Descriptions
FAIL	RED - this card has failed. BLANK - no card failure detected.
LOCK	RED - input has failed. BLANK - no input failure detected.
REF A	GREEN - card is tracking the output of clock input card A. BLANK - not tracking output of clock input card A.
REF B	GREEN - card is tracking the output of clock input card B. BLANK - not tracking output of clock input card B.
NOTE: If the FAIL and LOCK LEDs are both illuminated, the ST3 is in holdover mode and the card has not failed.	

MIS Card Replacement

Description

The MIS card may be removed or inserted into the shelf at any time without a negative effect to the operation of the shelf. The office alarms and shelf status (except for the battery alarm) do not function while the MIS card is removed from the shelf.

Procedure

1. Remove the MIS card from the shelf.

2. Insert the replacement card.

MIS, Maintenance Interface System, Holdover Clock

Figure A-20. Holdover Clock MIS Card LEDs

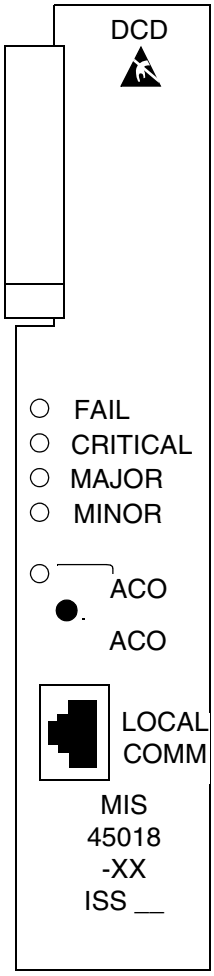

LEDs	Descriptions
FAIL	RED – This card or its power supply has failed. BLANK – No card or power supply failure detected.
CRITICAL	RED – Holdover clock system has failed. BLANK – No holdover clock system failure detected.
MAJOR	RED – Holdover clock system or any holdover clock card has a major alarm. BLANK – No major alarm detected.
MINOR	YELLOW – Holdover clock system or any holdover clock card has a minor alarm. BLANK – No minor alarm detected.
ACO	GREEN – The ACO push button has been pressed to silence the alarm during an alarm state.

TOCA Card Replacement

Description

When an MCA-5 is installed in the MCA slot, an HS protection switch automatically activates when the TO FAIL or PORT ALM lamp is lit. If the TO PORT ALM lamp is lit, you must determine whether it is actually a card port failure, or a shorted or unterminated cable external to the shelf. If you determine that the PORT ALM is actually a port failure on the card, replace the TO card.

Procedure

1. Verify that an HS protection switch has been activated. If an automatic protection switch has been activated, the output protection button lamps are lit over the failed card and HS TO card. The MCA-5 AUTO lamp flashes for 6 seconds during the automatic protection switch activation, and then lights steadily.

2. If an HS protection is not activated, manually activate a switch by simultaneously pressing the output protection buttons over the TO card with FAIL or PORT ALM lamp lit and a like HS TO card. The output protection button lamps should light over the failed TO card and a like HS TO card, and the MCA-5 MAN lamp flashes until the switch is released.

CAUTION: The TO cards must not be removed without first activating an HS protection switch to minimize the loss of output signals. The possible output loss times are as follows:

- TO card removal: up to 6 seconds
- Port or card failure: up to 3 seconds
- Manual switch activation/deactivation: approximately one ms.

3. Enter the following command to retrieve the terminal types and port numbers:

   rtrv-trm

4. Enter the following command to inhibit each OAP terminal displayed in the output from Step 3:

   inh-trm:trm=x:force=yes

   where x is the terminal number assigned as type OAP.

5. Remove the TO card from the shelf. Set the option switches on the replacement card to the correct settings. Insert the replacement card. The FAIL lamp on the replacement card should remain off and the INPUT lamp should light. The ST lamp should also light if the system is equipped with clock cards.

---

6. Wait 10 seconds after all the lamps normalize to allow the card to warm-up and generate outputs.

---

7. Press the lit output protection button for the HS TO card slot until the lamp goes out. The lamp over the output protection button should go off. This releases the HS protection switch and puts the replacement card online.

---

8. Enter the following command to return the OAP terminals to the in-service state:

   alw-trm:trm=x

   where x is the terminal number of the inhibited OAP terminal.

TOCA, Timing Output Composite Automatic, Holdover Clock

Figure A-21. Holdover clock TOCA card LEDs

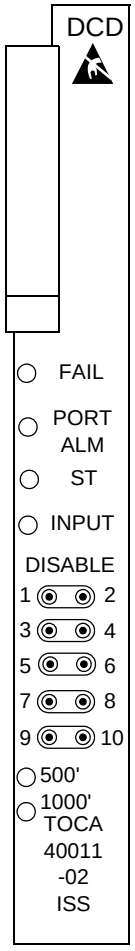

LEDs	Descriptions
FAIL	RED - this card has failed or there is a loss of all input references to this card. BLANK - no card or input reference failure detected.
PORT ALM	RED - if one to five outputs have failed or have been externally shorted. BLANK - no output failures detected.
ST	GREEN - an active clock is supplying the input reference for this card. BLANK - no active clock detected.
INPUT	GREEN - card is receiving a reference signal from one or more of the following: clock input A, clock input B, clock card A, clock card B. BLANK - card is not receiving a reference signal from any of the above sources.
500’	not used
1000’	not used

MCA, Matrix Controller Assembly Card, Holdover Clock

Figure A-22. Holdover Clock MCA Card LEDs

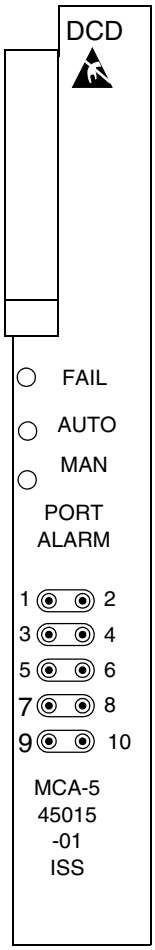

LEDs	Descriptions
FAIL	RED – This card has failed or there is a loss of all input references to this card. BLANK – No card or input reference failure detected.
AUTO	GREEN – Indicates output failure was protected automatically. BLANK – No failures detected.
MAN	GREEN – Indicates output failure was protected manually. BLANK – No failures detected.

Fan Assembly

The Fan Assembly P/N 890-0001-xx is used for cooling shelves in the EAGLE frame. The assembly includes 3 fan units and a controller card.

CAUTION: Do not perform procedures to "Replace Fan Assembly" on page A-72 if the Fan Assembly is used to cool shelves with HCMIM or HIPR cards. Contact your Customer Care Center.

Refer to the following procedures to:

- "Fan Assembly" on page A-71
- "Replace Fan Controller Card" on page A-72
- "Replace Fan Assembly" on page A-72

Replace Fan Unit

Procedure — Replace Fan Unit

CAUTION: Be careful when removing fans. Fan blades are exposed along the sides and back of the units. The fan blade speeds of remaining fans will increase after any fan is removed.

1. Loosen the two captive screws used to secure the fan to be replaced. Fan 1 is located next to the Fan contoller card. Refer to Figure A-23.

Figure A-23. Fan Unit Mounting Screws

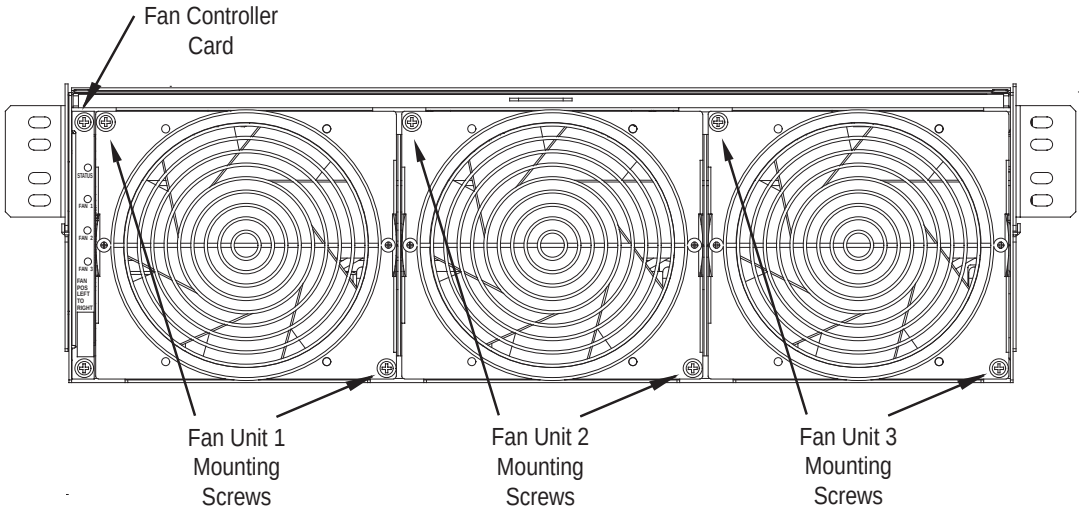

2. Firmly grasp the fan and pull straight out. The corresponding LED on the fan controller card is now red. Refer to Figure A-24..

3. Insert the replacement fan into the appropriate slot and secure the two captive screws. The replaced fan should immediately come up to speed and the speeds of other fans should return to normal. The corresponding LED on the fan controller card is now green.

Replace Fan Controller Card

Procedure — Replace Fan Controller

CAUTION: Be careful when removing fans. Fan blades are exposed along the sides and back of the units. The fan blade speeds of Fan 2 and Fan 3 will increase after Fan 1 is removed.

1. Remove Fan 1 by removing the two captive screws used to secure Fan 1 (Refer to Figure A-23). Fan 1 is located next to the Fan card. Firmly grasp Fan 1 and pull straight out.

---

2. Remove the fan controller card by removing the two captive screws used to secure the fan controller card. Remove Fan Controller Card by pulling straight out.

---

3. Insert the replacement fan controller card into the appropriate slot and secure the two captive screws.

---

4. Insert Fan 1 back into the space next to the fan controller card and secure (finger tighten) using the two captive screws.

   Fan 1 should immediately come up to speed and the speeds of Fans 2 and 3 should return to normal.

Replace Fan Assembly

CAUTION: Do not perform this procedure if the Fan Assembly is used to cool shelves with HCMIM or HIPR cards. Contact your Customer Care Center.

The following procedures are used to replace Fan Assembly P/N 890-0001-xx when it is used to cool shelves not populated with HCMIM or HIPR cards.

- **Procedure — Power Down Fan Assembly** on page A-73
- **Procedure — Remove Fan Cables and Fan Assembly** on page A-74
- **Procedure — Install Fan Assembly** on page A-75
- **Procedure — Power up Fan Assembly** on page A-77

Procedure — Power Down Fan Assembly

1. The fuse card located on the Fuse and Alarm Panel is marked FAN A and FAN B. Fuse positions 6, 12, and 18 are the correct locations on the FAP faceplate. The fans are fused at 3As, with blue flags per feed. Remove the appropriate fuse for the fan assembly being replaced according to the following:

   •Fuse position 6 is for the fan unit directly below the x100 shelf.

   •Fuse position 12 is for the fan directly below the x200 shelf.

   •Fuse position 18 is for the fan directly below the x300 shelf.

2. When both the A side and B side power is removed from the fan unit, all of the LEDs on the fan controller card (located on the left side of the front of the fan unit) are no longer illuminated and the all fan motors are off.

Figure A-24. Fan card with LEDs on front of fan assembly unit

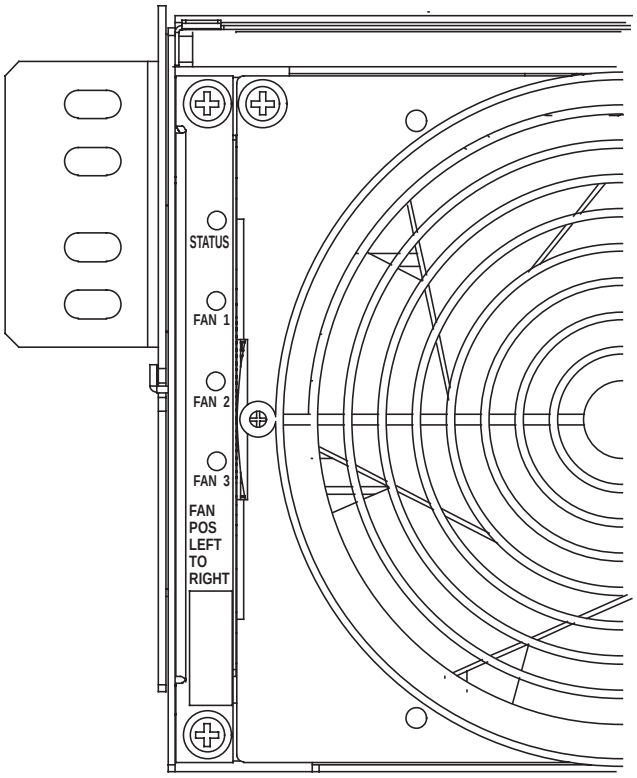

Procedure — Remove Fan Cables and Fan Assembly

1. At the fan assembly, place fiber paper on the shelf below where the fan is to be replaced. This ensures that nothing drops into the area or equipment below.

2. From the front of the frame remove the fan filter from the fan assembly.

3. From the rear of the fan unit, loosen the screws on the fan unit connector marked FAN A POWER. Remove the connector from the fan unit.

4. From the rear of the fan unit, loosen the screws on the fan unit connector marked FAN B POWER. Remove the connector from the fan unit.

5. Remove the screws from the the left and right sides of the rear of the fan tray bracket. There are two screws on each side. These screws must be removed from the rear of the frame.

Figure A-25. Fan Assembly Rear Bracket Screws.

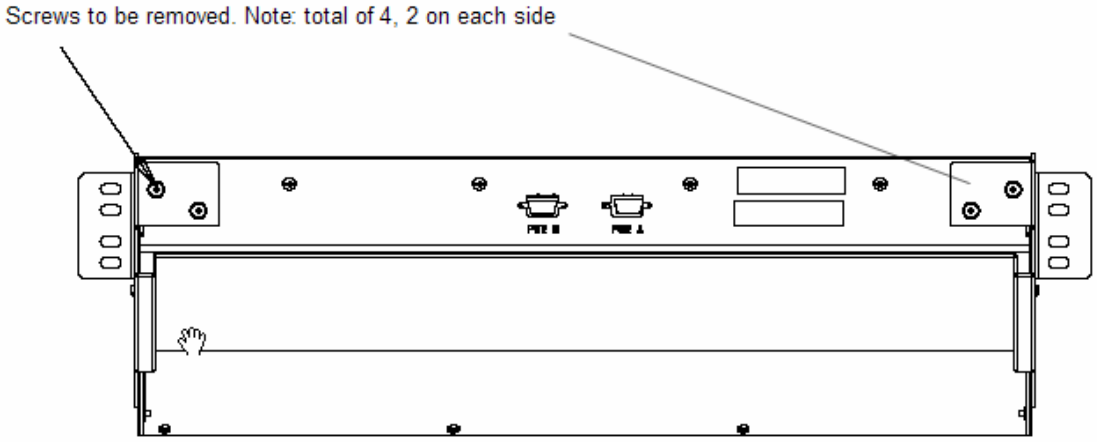

6. With the screws removed, carefully push on the rear of the unit until the fan assembly moves forward about an inch.

7. From the front of the frame remove the fan assembly from the the fan bracket. For easier removal, tilt the unit as it is removed.

Procedure — Install Fan Assembly

1. Remove the new fan unit from the container. The fan unit is shipped with the three fans already installed.

Figure A-26. Fan Assembly

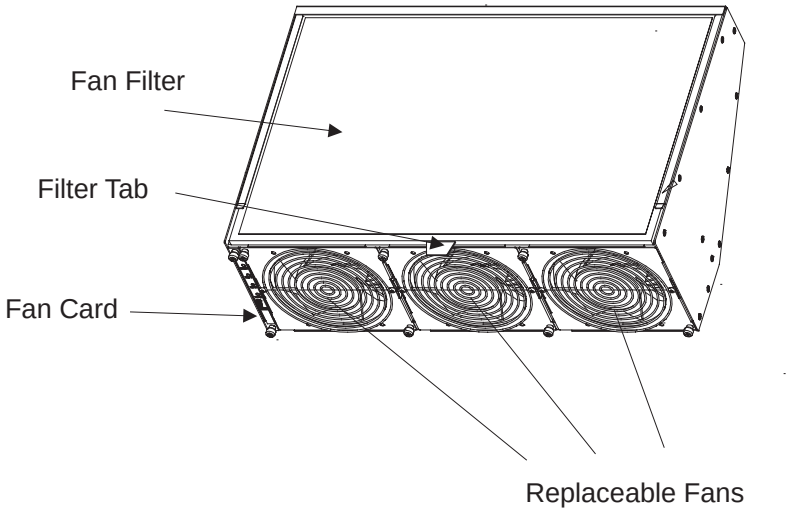

2. Insert the fan unit into the fan bracket. Tilt the unit up as it is pushed in and completely inserted into the bracket. After insertion, be sure the front of the fan unit is recessed about 1/2 inch from the front frame rails to allow the door to close.

Figure A-27. Fan tray inserted into fan tray bracket in the frame - front view

3. When the fan unit is aligned and in place, attach the fan unit to the fan tray bracket by tightening the screws on the left and right sides of the rear of the fan tray bracket. There are two screws on each side. These screws must be tightened from the rear of the frame.

Figure A-28. Tighten rear fan tray screws

4. From the front of the frame install the fan filter into the fan assembly.

5. At this time check and tighten all screws, including the screws holding the side brackets to the frame (if necessary). The side bracket screws should be tightened fully from the rear of the frame. Use a long hex driver or flat head screw driver.

Figure A-29. Tighten fan side bracket screws

6. Connect the fan cable at the rear of the fan assembly on the J9 connector to the FAN A POWER.

7. Connect the fan cable at the rear of the fan assembly on the J8 connector to the FAN B POWER.

8. Remove the piece of fiber paper on the top of the shelf below where the fan assembly was installed. This procedure is complete.

CAUTION: Before powering up the fans, ensure that the shelf directly above the fan does not contain any empty slots. Install an air management card in any empty slots to ensure proper air flow. These filler cards have no electrical connection to the system. See "Replacing a Card in the EAGLE 5 ISS" on page A-57 for general card installation guidelines.

Procedure — Power up Fan Assembly

All fans are fused at 3A (blue) per feed.

WARNING: Before powering up the fans, ensure that the shelf above the fan does not contain any empty slots. Install the air management card in any empty slots. See "Replacing a Card in the EAGLE 5 ISS" on page A-57 for general card installation guidelines.

1. After the fan is installed, the powering up process depends on the shelf location.
   - The fuse cards located on the Fuse and Alarm Panel are marked FAN A and FAN B, fuse positions 6, 12, and 18 are marked correct locations on the FAP faceplate.
   - Fuse position 6 is for the fan unit directly below the x100 shelf.
   - Fuse position 12 is for the fan directly below the x200 shelf.
   - Fuse position 18 is for the fan directly below the x300 shelf.
   - All fans are to be fused at 3As, with blue flags, per feed.
   - Fill out the fuse card completely.

---

2. Fifteen seconds after both the A side and B side power is connected to the fan assembly all of the LEDs on the fan controller card (located on the left side of the front of the fan assembly) are green.

Figure A-30. Fan card with LEDs on front of fan assembly

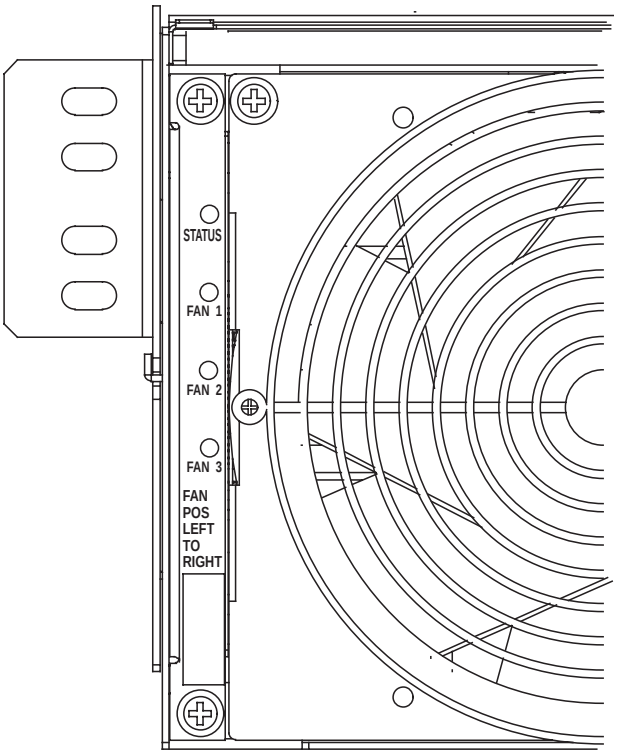

---

3. When the fans are powered up and running, a test must be conducted to ensure proper service. Go to the system terminal.

---

4. Check to see if the fan feature is activated. At the terminal, enter the command:

   rtrv-feat

Example output

```
rlghncxa03w 04-01-28 11:34:04 EST  EAGLE 34.0.0.
 EAGLE FEATURE LIST

 GTT      = on      GWS      = off     NRT      = off
 X25G     = off     LAN      = off     CRMD     = off
 SEAS     = off     LFS      = off     MTPRS    = off
 FAN      = off     DSTN5000 = off     WNP      = off
 CNCF     = off     TLNP     = off     SCCPCNV  = off
 TCAPCNV  = off     IPISUP   = off     DYNRTK   = off
 X252000  = off     INP      = off     PLNP     = off
 NCR      = off     ITUMTPRS = off     SLSOCB   = off
 EGTT     = off     VGTT     = off     MGTT     = off
 MPC      = off     ITUDUPPC = off     GFLEX    = off
 GPORT    = off     MEASPLAT = off     TSCSYNC  = off
 E5IS     = off
;
```

If the fan feature is off (illustrated in the example), go to Step 5. Otherwise, go to Step 6.

---

5. At the terminal, enter the command:

chg-feat:fan=on

With this command the user will perform the tests beginning with Step 7.

---

6. At the terminal, enter the command:

rept-stat-trbl

Check to see that there are no fan errors. Specifically, check that there are no "#302 Cooling Fan Failure" errors. Next, perform the tests beginning with Step 7.

---

7. Fan Verification (perform Step 7 through Step 12 for each fan assembly). Move to the rear of the frame and remove the A POWER cable from the FAN unit.

Result: Fan 2 and Fan 3 LEDs will blink as the fans speed up to maximum speed. This may take up to 15 seconds. Once maximum speed has been reached Fan 2 and Fan 3 LEDs on the Fan Controller card will be solid green. Fan 1 LED should be red. The controller LED should be blinking green. Fan 1 should stop running and the MINOR LED should be lit.

---

8. At the system terminal enter the command:

rept-stat-trbl

This step is repeated for each fan. Test each fan to ensure that the alarm and the units are working correctly.
Result: The terminal reports:

```
# 302 Cooling Fan Failure
```

---

9. Replace the A POWER cable on the back of the FAN unit and secure the connector.
Result: All fans are running and the MINOR LED is not lit.

Terminal reports alarm:
```
# 303 Cooling Fans Normal
```

---

10. Remove the B POWER cable from the FAN unit.

Result: Fan 1 and Fan 2 LEDs will blink as the fans speed up to maximum speed. This may take up to 15 seconds. Once maximum speed has been reached Fan 1 and Fan 2 LEDs will be solid green. Fan 3 LED should be red. The fan controller LED should be blinking. Fan 3 should stop running and the MINOR LED should be lit.

---

11. At the system terminal enter the command:

rept-stat-trbl

Test each fan to ensure that the alarms and the unit are working correctly.
Result: The terminal reports:
```
# 302 Cooling Fan Failure
```

---

12. Replace the B POWER cable on the back of the FAN unit and secure the connector.
Result: The fans are running and the MINOR LED is not lit.

The terminal reports alarm:
```
# 303 Cooling Fans Normal
```

---

13. Repeat steps 7. through 12. for each fan unit installed. This procedure is complete.

EAGLE 5 ISS Replacement Parts List

For a listing of field replaceable parts used in the EAGLE 5 ISS and their part numbers, refer to the tables in Appendix G Part Numbers.

All parts must be replaced through the Return Material Authorization (RMA) process. Contact Tekelec Technical Services at the appropriate number before replacing any parts.

Reference: “Customer Care Center” on page 1-13.

Replacement Cables List

For a listing of all cables used in the EAGLE 5 ISS and their part numbers, refer to the tables in Appendix G Part Numbers.

All cables must be replaced through the Return Material Authorization (RMA) process. Contact Tekelec Technical Services at the appropriate number before replacing any cables.

Reference: “Customer Care Center” on page 1-13

B

X.25/SS7 Message Conversion

Contents ..... Page

Introduction B-2

Conversion from X.25 to SS7 ..... B-3

Introduction

The X.25/SS7 gateway feature connects X.25 and SS7 networks. The EAGLE 5 ISS STP acts as a gateway between the two networks, with both X.25 and SS7 links terminating to specific cards within the EAGLE 5 ISS.

Message conversion involves removing and adding the protocol envelopes used by X.25 and SS7 networks. The MSU must have the following fields set to specific values:

Field	*Value*
MSU Service Indicator Octet (SIO)	SCCP
SCCP Message Type	UDT
SCCP Called Party Address Indicator	- SSN included - No GTT - Route by PC or SSN
SCCP Called Party SSN	Not equal to 1

If the SCCP message type is other than UDT (UDTS, for example) it is discarded and counted.

If the above format is present, but the SSN is equal to”1” (subsystem management messages), or the MSU SIO is equal to SNM (0000) or SNT (0001 and 0010), the MSUs are handled by network management. The EAGLE 5 ISS discards all other types of MSUs and issues an event message.

The following information is an overview of the conversion process. The following section in this appendix shows the details of the MSU and the X.25 packets that are built. The definitions for the message elements are as follows:

- Control - The portion of each message that is relevant only to the specific protocol.
- Routing Label - The SS7 portion that contains the OPC, DPC and SLS.
- SCCP - The envelope in SS7 that carries the TCAP.
- TCAP - The envelope that carries the IS.41 message.
- Logical Channel - The identification of the virtual circuit used by the X.25 network.

Conversion is closely tied to routing. The view of the origination and the destination is different on the X.25 side from the SS7 side. In format conversion, the origination and destination are known, and the connection has been defined in the gateway routing table.

Conversion from X.25 to SS7

Following is an overview of the message conversion from the X.25 to SS7 network:

Field	*Value*
Control	**1** Parameter is set to length indicator field (and internal DMA length) from received data packet length. **2** SIO set as follows: Sub-service field equal to 1000. National network (10xx) and Priority of 0 (xx00). Service indicator equal to 0011 (SCCP).
X.25 Data Network Address	**1** OPC value is set from the X.25 point code field in the gateway routing table. **2** DPC value is set from SS7 point code field in the gateway routing table. **3** SLS value is set from the local variable that is incremented for each SS7-bound message. Traffic is generated evenly across all messages sent to the SS7 network.
TCAP	No conversion

If the packet type is designated as a data packet (containing an IS41 message) following is the information appended to the level 3 SCCP header that is generated by the EAGLE 5 ISS:

X.25 Data Packets	**1** Message type is set to UDT. **2** Protocol class value set to 0. **3** Called party indicator is set equal to: SSN included PC not included GTT not included Route on routing label and SSN National address **4** Called party SSN is set from the SS7 SSN field of gateway routing table. **5** Calling party indicator is set equal to the following: SSN included PC not included GTT not included Route on routing label and SSN National address **6** Calling party SSN is set from X.25 SSN field in the gateway routing table

Conversion from SS7 to X.25

Following is the message conversion from the SS7 network to the X.25 network:

Field	*Value*
Control	GFI is set equal to the following: no Dbit no Qbit P(s)/P(r) modulo 8
Logical Channel	Set from logical channel field of the gateway routing table.
TCAP	No conversion.

NOTE: If the total message is larger than the default packet size, the message is discarded and the STP generates an unsolicited information message (UIM).

Detailed Message Conversion

This section shows the X.25 to SS7 message conversion in detail.

Table B-1. Detailed Message Conversion

Offset	*Binary*	*Hex*	*Field Description*	*Value*
		MTP Level 2		
00	01111110	7E		
	x1111111		Backward Sequence Number	127 (dummy data)
	0xxxxxxx		Backward Indicator Bit	0 (dummy data)
01	10000000	80		
	x0000000		Forward Sequence Number 0	(dummy data)
	1xxxxxxx		Forward Indicator Bit 1	(dummy data)
02	1000 0000	80		
	xxbbbbbb		Length Indicator	Equal to 24 plus TCAP message length (TCAP message is the user data portion of the X.25 data packet)

Offset	*Binary*	*Hex*	*Field Description*	*Value*
	00xxxxxx		Spare	0
MTP Level 3				
03	10000011	83	SIO	
	xxxx0011		Service Indicator	0011= SCCP
	xx00xxxx		Network Priority	Equal to 00
	10xxxxxx		Network Indicator	10 = National Network
04	bbbbbbbb	Pm	Destination Point Code	Connection determination finds this value in the gateway routing table SS7 point code field.
05	bbbbbbbb	Pc		
06	bbbbbbbb			
07 (#5)	bbbbbbbb			Connection determination locates this value in the gateway routing table (GWT) X.25 point code field.
08	bbbbbbbb		Origination Point Code	Connection determination locates this value in the gateway routing table (GWT) X.25 point code field.
09	bbbbbbbb			Connection determination locates this value in the gateway routing table (GWT) X.25 point code field.
10	000bbbbb			
	xxxbbbbb		Signaling Link Selection	SLS subsystem provides.
	000xxxxx		Spare	
SCCP (No Global Title Translation requested)				
11	00001001	09	Message Type	09 = Unitdata
12	00000000	00		
	xxxx0000		Protocol Class	0 = Class 0

Offset	*Binary*	*Hex*	*Field Description*	*Value*
	0000xxxx		Message Handling	0000 = discard message on error
13	00000011	03	Called Party Address Pointer	@ offset 13 + 3(03) = 16
14	00000101	05	Calling Party Address Pointer	@ offset 14 + 5(0b) = 19
15	00000111	07	Data Portion Pointer	@ offset 15 + 7(0d) = 22
16	00000011	03	Called Party Address Length	3
17	11000001	c1	Called party Address Indicator	
	xxxxxxx1		Subsystem Number Indicator	1 = SSN included
	xxxxxx0x		Point Code Indicator	0 = PC not included
	xx0000xx		Global Title Indicator	0000=no global title
	x1xxxxxx		Routing Indicator	1 = route by point code or SSN
	1xxxxxxx		National/ International	1 = National address
18	xxxxxxxx	SS	Subsystem Number	SS7 SSN from Gateway Routing Table.
19	00000011	03	Calling Party Address Length	3
20	11000001	c1	Calling Party Address Indicator	
	xxxxxxx1		Subsystem Number Indicator	1= SSN included
	xxxxxx0x		Point Code Indicator	0 = PC not included

Offset	*Binary*	*Hex*	*Field Description*	*Value*
	xx0000xx		Global Title indicator	0000 = No global title included
	x1xxxxxx		Routing indicator	1 = Route by point code or SSN
	1xxxxxxx		National/ International	1 = National address
21	xxxxxxxx		Subsystem Number	X.25 SSN from Gateway Routing Table
		TCAP		
22	bbbbbbbb		Data Portion Length	Length of TCAP message received from X.25 network.
23	Variable		TCAP Data	
		X.25 Level 2		
00	000000bb		Address Field	03=DTE, 01=DCE
01	rrrpsss0		Control Field	
	rrrxxxxx		Receive sequence number, n(r)	
	xxxpxxxx		Poll/Final bit	
	xxxxsssx		Send sequence number, n(s)	
	xxxxxxx0		Frame type	0 = I-frame
		X.25 Level 3 (Call Request Packet)		
02	00010000		General Format Indicator	
	0xxxxxxx		Q-bit	0 = not used
	x0xxxxxx		D-bit	0 = not used
	xx01xxxx		Modulo bits	01 = modulo 8 for P(r), P(s)
	xxxx0000		Logical Channel Group number	

Offset	*Binary*	*Hex*	*Field Description*	*Value*
03	xxxxxxxx		Logical channel number	Connection determination locates this value in the GRT logical channel field.
04	00001011	0B	Packet type	0B= Call Request
05	ttttcccc		Address lengths	
	ttttxxxx		Calling party address length	Connection determination calculates these values from the GRT X.25 called address and SS7 calling address fields
	xxxxcccc		Called party address length	Connection determination calculates these values from the GRT X.25 called address and SS7 calling address fields
06	dddddddd		Called party address	Connection determination locates this value in the GRT X.25 address field
n	dddddddd		Called party address	Connection determination locates this value in the GRT X.25 address field
n+1	00000000		Calling party address	Connection determination locates this value in the GRT SS7 address field.
m	00000000		Calling party address	Connection determination locates this value in the GRT SS7 address field.

X.25 Level 3 (Data Packet)

02	00010000		General Format Indicator	
	0xxxxxxx		Q-bit	0 = not used
	x0xxxxxx		D-bit	0 = not used
	xx01xxxx		Modulo bits	01 = modulo 8 for P(r), P(s)
	xxxx0000		Logical Channel Group number	0 = Group 0
03	xxxxxxxx		Logical channel number	PVC or SVC number

Offset	*Binary*	*Hex*	*Field Description*	*Value*
04	rrrmsss0		Packet type	xxxxxxx0 = Data
	rrrxxxxx		Receive sequence number, P(r)	
	xxx0xxxx		More bit	0 = single, stand-alone packet
	xxxxsssx		Send sequence number, P(s)	
		TCAP		
29	xxxxxxxx		TCAP Data	

C

Holdover Clock Troubleshooting Procedures

Contents ..... Page

Introduction C-2

Interpreting System Alarms, Lamps And Trouble Isolation C-2

Introduction

Most alarm conditions in the holdover clock are not out-of service or service-affecting conditions. The system is designed with redundant power, reference inputs, clock input cards, stratum clock cards and output card protection switching.

The only true out-of-service condition is when all power is lost to a shelf, or all reference inputs and both stratum clock cards fail. Before taking any action on the system, such as removing cards, first consider the following troubleshooting guidelines:

- Do not touch the shelf until you have analyzed the condition and know the possible result of any planned corrective actions.
- Do not touch the shelf until you have been properly grounded.
- Both major and minor alarms in the shelf require immediate attention. But very few alarms in the holdover clock system are service affecting. Improper corrective actions could be service affecting.
- Do not remove an ST3 clock card from the shelf unless you are certain it is the cause of the condition. This is especially true if the ST clock card(s) is (are) in the holdover mode (the HOLD OV/HOLDOVER lamp is lit, or the HOLD OV/HOLDOVER and INP TOL lamps are lit). Removing both ST clock cards in this condition causes total loss of all outputs from the shelf and/or system.
- Write down any alarm and normal lamp conditions in the shelf. These will help you to determine where to look for the cause of the condition.

Interpreting System Alarms, Lamps And Trouble Isolation

Alarms generated by the holdover clock are reported through the EAGLE 5 ISS. All alarm conditions are defined in Chapter 3, Corrective Maintenance.

When troubleshooting, write down all abnormal and normal lamp conditions for the shelf with the alarm lamp lit on the SAI card. This will assist in analyzing and isolating the cause of the condition. Do not start removing or replacing cards to attempt to clear alarms, as it could lead to crashing EAGLE 5 ISS.

Tables to aid in troubleshooting are listed in the following sections. Once the basic trouble has been isolated and it has been determined that an individual card is defective, perform the appropriate card replacement procedure in Appendix A.

Table C-1. Input and ST3 Alarm Conditions

SAI/MIS LAMPS	ABNORMAL CARD LAMPS	ACTIVATED OFFICE ALARMS AND SHELF STATUS	ACTIVATED CLOCK STATUS A AND B	CONDITION TYPE # (NOTE)
MAJOR and MINOR lit	ST3 A and B = FAIL, LOCK, and REF B lit	Visual = MAJOR and MINOR Shelf Status = MAJSI, MINSI, and CLKL. (HOLDOVER ALARM switch SW3 on backplane is set to MAJ or MIN)	None	1
MAJOR and MINOR lit	Input cards A and B = FAIL lit, frequency/bit rate lamp off, SR FL lit (ACI only) ST3 A and B = FAIL, LOCK, and REF B lit	Visual = MAJOR and MINOR Shelf Status = MAJSI, MINSI, and CLKL. (HOLDOVER ALARM switch SW3 on backplane is set to MAJ or MIN)	None	2
MINOR lit	Input card A or B = FAIL lit, frequency/bit rate lamp off or lit, SR FL lit (ACI only) ST3 A and B = REF (A or B) lamp lit (associated with input card with FAIL lamp off)	Visual = MINOR Shelf Status = MINSI, and CLKL (HOLDOVER ALARM switch SW3 on backplane is set to MAJ or MIN)	None	3
MINOR lit	ST3 A and B = LOCK lit	Visual = MINOR Shelf Status = MINSI (HOLDOVER ALARM switch SW3 on backplane is set to MAJ or MIN)	None	4
MINOR periodically lights, then goes off	Input card A and/or B = FAIL periodically goes on and off. First occurrence only the SRC ACT/SRC ACTIVE on FAIL card goes off and lights on the other card.	Visual = Periodic MINOR Shelf Status = Periodic MINSI and CLKL (HOLDOVER ALARM switch SW3 on backplane set to MAJ or MIN)	None	5
MAJOR lit	ST3 A or B = FAIL lit	Visual = MAJOR Shelf Status = MAJSI (HOLDOVER ALARM switch SW3 on backplane is set to MAJ or MIN)	None	6

NOTE: For the corrective action to take for each condition type, refer to Table C-2.

Table C-2. Input and ST3 Corrective Actions

CONDITION TYPE # (From Table E-1.)	CONDITION AND PROBABLE CAUSE	CORRECTIVE ACTION
1	No input cards installed. Outputs are as accurate as freerunning clock cards. Timed network elements reporting high slip rate.	Install at least one input card.(See Appendix A).
2	Input references A and B have failed (frequency/bit rate lamp off) or have exceeded BPV, OOF, or excessive zeros parameters (frequency/bit rate lamp lit).	Check input reference connections at the shelf and source ends. Reconnect if required. Isolate and repair input reference facilities if required.
	The input reference facility framing format rearranged from D4 to ESF, or vice versa, and the input card options were not changed to match it.	Change the option switch settings to match the current framing format. See the *Installation Manual*.
	The input reference has been recently reassigned, and the signal amplitude is too high.	Wire a 100 ohm, 1/4 watt resistor across T and R input terminals on the shelf backplane.
	Both input cards have failed.	Replace both input cards (See Appendix A).
3	Input reference A or B has failed (frequency/bit rate lamp off) or has exceeded BPV, OOF, or excessive zeros parameters (frequency/bit rate lamp lit).	Check input reference connections at the shelf and source ends. Reconnect if required. Isolate and repair input reference A or B facility if required.
	Input card A or B has failed.	Replace the input card with the FAIL lamp lit (See Appendix A).
	The input reference facility framing format rearranged from D4 to ESF, or vice versa, and the input card options were not changed to match it.	Change the option switch settings to match the current framing format.
	The input reference has been recently reassigned, and the signal amplitude is too high.	Wire a 100 ohm, 1/4 watt resistor across T and R input terminals on the shelf backplane.
4	Active input reference has exceeded pull-in range of ST3 cards. Timed network elements reporting high slip rate.	Press transfer (XFR) pushbutton on either input card to switch SRC (source) ACTIVE lamp to the other input card. ST3 A and B LOCK lamps go off in less than 40 seconds. Isolate source of frequency offset on input reference facility and repair.
5	Input reference facility (A and/or B) line coding rearranged from AMI to B8ZS and input card(s) option switches were not set to match the change. Input card BPV spec periodically exceeded.	Change input card(s) option switch settings from AMI to B8ZS.
6	ST3 A or B card has failed and squelched its outputs. Outputs are receiving their reference from the ST3 with its FAIL lamp off. Outputs are not affected.	Replace the ST3 card (A or B) with the FAIL lamp lit (Appendix A).

Table C-3. Shelf and Output Alarm Conditions - Not Related to Input and ST Conditions

SAI/MIS LAMPS	ABNORMAL SHELF AND CARD LAMPS	ACTIVATED OFFICE ALARMS AND SHELF STATUS	ACTIVATED CLOCK STATUS A AND B	CONDITION TYPE # (NOTE)
None lit	All lamps on all cards are off	Visual = CRITICAL (MIS ONLY), MAJOR, and MINOR Shelf Status = CRTSI (MIS only), MAJSI, MINSI, and BATTALM	None	1
MINOR lit	MCA-5 = All 10 PORT ALM lamps lit	Visual = MINOR Shelf Status = MINSI	None	2
MINOR lit	Any TO card = PORT ALM lit Output protection pushbutton lamps = Lamp over TO card with PORT ALM lit, and like HS TO card light for a short period of time (approx 3 seconds) then goes off MCA-5 = AUTO lamp flashes for approx 6 seconds when HS protection switch is activated and released.	Visual = MINOR Shelf Status = MINSI and PRTA (SW1 positions 3 and 5 on MCA-5 set to MAJ or MIN)	None	3
MINOR lit	Shelf fuse A or B = Lamp lit	Visual = MINOR Shelf Status = MINSI, and BATTALM. POWER ALARM switch SW2 on backplane is set to MIN)	None	4
MAJOR lit	Any TO, ST, or MCA-5 = FAIL lit	Visual = MAJOR Shelf Status = MAJSI (MCA-5 SW1, positions 3 and 5 set to MAJ)	Visual = MAJOR Shelf Status = MAJSI (MCA-5 SW1, positions 3 and 5 set to MAJ)	5
FAIL and MAJOR lit (MIS only)	MIS = FAIL lit	Visual = MAJOR Shelf Status = MAJSI	None	5

SAI/MIS LAMPS	ABNORMAL SHELF AND CARD LAMPS	ACTIVATED OFFICE ALARMS AND SHELF STATUS	ACTIVATED CLOCK STATUS A AND B	CONDITION TYPE # (NOTE)
MAJOR and MINOR lit	Shelf fuse A or B = Lamp lit	Visual = MAJOR Shelf Status = MAJSI, MINSI, and BATTALM. (POWER ALARM switch SW2 on backplane is set to MAJ)	None	4
MAJOR and MINOR lit	Any TO card = FAIL lamp lit Output protection pushbutton lamp = Lamps lit over TO with FAIL lamp lit and like HS TO card (HS protection switch activated).	Visual = MAJOR and MINOR Shelf Status = MAJSI and MINSI (MCA-5 SW1, positions 3 and 5 set to MIN)	None	5
MAJOR and MINOR lit or MINOR lit or None lit (MAJOR and MINOR lit if MCA-5 SW1, positions 3 and 5 set to MAJ; if SW1 set to MIN, then MIN lit; if set to NO ALARM, then None lit)	Output protection pushbutton lamps = Lamps over TO cards and HS cards alternately light and then go off.	Visual = MAJOR and MINOR or MINOR or None Shelf Status = MAJSI and MINSI or MINSI or None (MAJOR and MINOR if MCA-5 card SW1 set to MAJ; MINOR if SW1 set to MIN; none if SW1 set to NO ALARM)	None	6
MINOR lit or MAJOR and MINOR lit (MINOR if MCA-5 SW1, positions 3 and 5, are set to MIN or NO ALARM; MAJOR and MINOR lit if set to MAJ)	Any TO card = PORT ALM lit Output protection pushbutton lamps = Lamps lit over TO card with PORT ALM lit, and like HS TO card.	Visual = MINOR or MAJOR and MINOR Shelf Status = MINSI and PRTA or MAJSI, MINSI, and PRTA (MINOR if SW1 positions 3 and 5 on MCA-5 set to MIN or NO ALARM; MAJOR and MINOR if set to MAJ)	None	7

SAI/MIS LAMPS	ABNORMAL SHELF AND CARD LAMPS	ACTIVATED OFFICE ALARMS AND SHELF STATUS	ACTIVATED CLOCK STATUS A AND B	CONDITION TYPE # (NOTE)
MINOR lit or MAJOR lit or None lit (MINOR lit if MCA-5 SW1, positions 3 and 5 set to MIN; if SW1 set to MAJ, then MAJOR is lit; if set to NO ALARM, then None lit)	Output protection pushbutton lamps = Lamps lit over a TO card and like HS TO cards MCA-5 = MAN lamp is flashing	Visual = MINOR or MAJOR or None Shelf Status = MINSI or MAJSI or None (MINOR lit if MCA-5 SW1, positions 3 and 5 set to MIN; if SW1 set to MAJ, then MAJOR is lit; if set to NO ALARM, then None lit)	None	8
Note: For the corrective action to take for each condition type, refer to Table C-4.				

Table C-4. Shelf and Output Corrective Actions - Not Related to Input and ST Conditions

CONDITION TYPE # (FROM Table E-3.)	CONDITION AND PROBABLE CAUSE	CORRECTIVE ACTIONS
1	Loss of Battery A and B to shelf. All outputs are squelched. Causes could be from operating error, office battery source failure, blown fuses, or a component failure, e.g., isolation diode which shorts battery to battery return.	1.Determine cause of loss of battery and repair. 2.Restore office battery source. 3.Replace blown fuses in battery distribution bays, miscellaneous fuse bays, and panels, and/or on DCD shelf.
2	Communication between MCA-5 and TO cards is not functioning. Microprocessor on the MCA-5 is failed or garbled. Does not affect outputs. Automatic TO protection switching function disabled. Manual TO protection switching function is still operational.	1.No TO cards in shelf. Install at least one TO card. 2.No input references or input cards, *and* no clock cards installed. Install at least one clock (ST) card (See Appendix A.) 3.MCA-5 communications bus or microprocessor garbled. Remove and reinsert the MCA-5 card to clear bus and microprocessor. 4.MCA-5 microprocessor failed. Replace MCA-5 card (Appendix A).
3	HS protection switch activated, then released because of: •Unterminated cable on TOTA or TOTL output, or, •Shorted cable on TO output. When the condition occurred, an HS protection switch was activated, PORT ALM on TO goes off, and lights on the HS TO card, output protection pushbutton lamps over the TO and HS light, MCA-5 AUTO lamp flashes, HS protection switch releases, PORT ALM on HS TO goes off and lights on TO, output protection pushbutton lamps go off, and MCA-5 AUTO lamp stops flashing (duration = 3 to 6 seconds). Non-failed ports on TO with PORT ALM lit lost output for one millisecond during HS protection switch activation and release. Failed TO port is out of service.	1.Press and hold the output protection pushbutton over the TO card with PORT ALM lamp lit. MCA-5 lights PORT ALM lamp(s) of failed TO port. Release pushbutton. 2.Isolate and repair cable or NE connected to that TO port. 3.If port connection is new and not yet terminated at NE, then either insert disabling pin in that port's disabling jack on TO card faceplate, or remove cable from output wire-wrap panel, or place an appropriate resistor termination across tip (T) and ring (R) of cable at NE end, until ready to connect cable at NE end.
4	Loss of Battery A or B to shelf. Does not affect outputs. Causes could be from operating error, blown fuse, or a component failure, e.g., isolation diode which shorts battery to battery return.	1.Determine cause of loss of battery and repair. 2.Replace blown fuses in battery distribution bays, miscellaneous fuse bays, and panels, and/or on DCD shelf.

CONDITION TYPE # (FROM Table E-3.)	CONDITION AND PROBABLE CAUSE	CORRECTIVE ACTIONS
5	Card with FAIL lamp lit has failed, except for input card which causes a MINOR alarm when its FAIL lamp lights. Outputs are not affected if MCA-5 and HS slots are equipped.	Replace the card with the FAIL lamp lit (Appendix A). Release HS protection switch, if activated, by pressing lit HS pushbutton until switch releases.
6	A TO card's microprocessor has lost its ability to process data. The TO cards are alternately being switched to HS protection and then released. One millisecond loss of outputs each time a TO is switched to or released from HS protection.	Manually switch each TO card to the HS, replace the TO card (Appendix A) and release the HS switch. Continue until the malfunctioning TO card is located and removed from the shelf.
7	Output port failed on TO card with PORT ALM lamp lit. HS protection switch activated. Loss of output on failed port. Other output on same TO lost for one millisecond when HS protection switch activated. When condition occurred, an HS protection switch was activated, PORT ALM lamp on TO card remained lit, output protection pushbutton lamps over TO and HS slots lit, and MCA-5 card's AUTO lamp flashes for 6 seconds and then lights steady.	1.Press and hold the output protection pushbutton over the TO card with the PORT ALM lamp lit. MCA-5 lights PORT ALM lamp(s) of failed TO port. Release pushbutton. 2.Remove TO card with PORT ALM lamp lit. 3.Set option switch settings on the replacement TO card identical to settings on removed TO card. 4.Insert replacement TO card in shelf slot and wait 10 seconds for TO to warm-up. Verify ST, INPUT and OPTION lamps are lit and PORT ALM and/or FAIL lamps are not lit. 5.Press output protection pushbutton over HS TO until pushbutton lamps go out (releases HS switch). MCA-5 card's AUTO lamp flashes for 6 seconds and then lights steady.
8	TO card manually switched to HS TO card	Release the manual HS switch by pressing the lit pushbutton over the HS TO card for 3 seconds.

D

Unsolicited Output Message Groups

Contents ..... Page

Introduction D-2

Introduction

This appendix provides a list of the unsolicited alarm messages (UAMs) and unsolicited information messages (UIMs) generated by the EAGLE 5 ISS and the output groups that these messages are assigned to.

These messages are broadcast to the EAGLE 5 ISS terminals. To control which terminals these messages are broadcast, the messages have been placed into these output message groups. The **chg-trm** command is used to control to which terminals these groups of output messages are broadcast. For details about using the **chg-trm** command, see the "Changing Terminal Characteristics" in the "Configuring the OAP Port" procedure in the *Database Administration Manual - SS7*, or the **chg-trm** command description in the *Commands Manual*.

Scheduled Measurements for systems up to 700 links are sent to the Traffic Unsolicited Output Message Group and are not included in this appendix. No other unsolicited output is sent to this output group. Refer to Chapter 4, *Measurements* for detailed traffic measurement information. Refer to the *System Administration Manual - System Management* for information on configuring the measurements terminal for systems up to 700 links.

The messages are shown in these tables.

Table D-1. System Maintenance Unsolicited Output Message Groups

Table D-2. Link Maintenance Unsolicited Output Message Group

Table D-3. Card Unsolicited Output Message Group

Table D-4. Application Subsystem Unsolicited Output Message Group

Table D-5. GTT Unsolicited Output Message Group

Table D-6. GWS Unsolicited Output Message Group

Table D-7. Clock Unsolicited Output Message Group

Table D-8. Measurements Maintenance Unsolicited Output Message Group

Table D-9. LNP Database Unsolicited Output Message Group

Table D-10. Security Administration Unsolicited Output Message Group

Table D-11. Program Update Unsolicited Output Message Group

Table D-12. UIM Redirect Unsolicited Output Message Group

Table D-13. Database Unsolicited Output Message Group

Table D-14. MPS Unsolicited Output Message Group

Table D-15. Monitor Unsolicited Output Message Group

Table D-16. SLAN Maintenance Unsolicited Output Message Group

Table D-17. SEAS Maintenance Unsolicited Output Message Group

NOTE: If the LNP feature is not on, the messages in the LNP Subscription and LNP Database Unsolicited Output Message groups are not displayed.

Each table contains the number of the UAM or UIM, the alarm level assigned to the message, and the text of the message. More information on these messages can be found in Chapter 3, *Corrective Maintenance*.

Table D-1. System Maintenance Unsolicited Output Message Groups

UAM/UIM Number	Alarm Level	Message Text
0002	Minor	Card is not running approved GPL
0003	None	Alarm cleared for GPL
0004	Minor	Card is running non-activated GPL
0005	None	Alarm cleared running non-activated GPL
0011	Major	Entering forced simplex mode
0018	None	Exiting forced simplex mode
0039	None	GPL has been corrected
0040	Minor	GPL is corrupted
0043	Major	Incorrect feature configuration
0044	Minor	Real time clock battery low
0045	None	Real time clock battery restored
0046	None	Terminal enabled
0047	Major	Card type not valid for application
0048	Minor	Terminal failed
0058	Critical	Critical customer trouble detected
0059	Major	Major customer trouble detected
0060	Minor	Minor customer trouble detected
0061	None	Customer trouble detected
0062	None	Customer trouble cleared
0063	Critical	Critical holdover clock trouble detected
0064	Major	Major holdover clock trouble detected
0065	Minor	Minor holdover clock trouble detected
0066	None	Holdover clock trouble cleared
0077	Critical	Card temperature is critical lvl:T2
0078	Major	Card temperature above nominal

Table D-1. System Maintenance Unsolicited Output Message Groups (Continued)

UAM/UIM Number	Alarm Level	Message Text
0079	None	Card temperature within nominal levels
0082	Major	Alarm in Fuse Panel
0083	None	Fuse Panel alarm has cleared
0097	None	IMT allowed
0098	None	IMT inhibited
0106	None	IMT Bus alarm cleared
0107	Minor	Minor IMT failure detected
0108	Major	Major IMT failure detected
0109	None	All IMT System level alarms cleared
0110	Minor	Failure detected on one IMT bus
0111	Major	Failure on both IMT A and IMT B
0112	Critical	Major failures detected on both IMTs
0114	Major	System IP TPS threshold exceeded
0117	None	System IP TPS normal
0142	None	System release alarm cleared
0143	Minor	System release GPL(s) not approved
0144	Minor	System release version unknown
0276	Major	Insufficient memory for IP7 provisioning
0277	Major	AS Unavailable
0278	None	AS Available
0279	Minor	AS Restricted
0280	None	AS Unrestricted
0294	None	REPT-ALMINH: alarm output PERM inhibit
0295	None	REPT-ALMINH: alarm output enabled
0296	None	REPT-ALMINH: alarm output TEMP inhibit
0302	Minor	Cooling fan failure
0303	None	Cooling fan normal
0308	Critical	Node isolated due to SLK failures
0309	None	Node is no longer isolated
0366	None	Temp Key(s) expiration alarm cleared

Table D-1. System Maintenance Unsolicited Output Message Groups (Continued)

UAM/UIM Number	Alarm Level	Message Text
0367	Major	Temp Keys(s) expiring soon
0368	Critical	Temp Keys(s) have expired
0388	None	Illegal Address Error Cleared
0389	None	Card responding normally
0390	Major	Illegal Address Error
0391	Major	Card not responding Error
0392	Major	OA&M IP Security feature is OFF
0393	None	OA&M IP Security feature is ON
0438	Critical	Degraded Mode, Invalid OAM HW config
0439	None	Exiting Degraded Mode
0466	Major	STC Network Unavailable
0467	None	STC Network Available
0500	None	Alarm being cleared for this device
0514	Major	Standby MASP is inhibited
0515	None	Standby MASP is allowed
0520	Critical	Frame power usage reached LVL3
0521	Major	Frame power usage reached LVL2
0522	Minor	Frame power usage reached LVL1
0523	None	Frame power usage normal
0524	None	REPT-ALMINH: alarm output TIMED inhibit
0525	None	Timed alm inh rdy to expire
0911	Major	Dynamic database is inconsistent
0912	None	Dynamic database is now consistent
1000	None	MTP rcvd UPU - user part is not SCCP
1001	None	MTP rcvd Transfer Controlled (TFC)
1002	None	MTP rcvd invalid TFC - status 0
1003	None	MTP rcvd invalid H0/H1 code
1004	None	MTP rcvd unknown DPC
1059	None	Telnet terminal connection disconnected
1098	None	Unexpected disk access timeout

Table D-1. System Maintenance Unsolicited Output Message Groups (Continued)

UAM/UIM Number	Alarm Level	Message Text
1105	None	REPT EVT:IMT GPL reloading
1106	None	REPT COND:IMT GPL reloading
1120	None	TRBL Queue is full: elements overwritten
1129	None	Ported subs SMSC matches Home SMSC Addr
1130	None	LOCREQ rcvd - IS412GSM not provisioned
1131	None	Invalid digits in IS41 MAP Digits parm
1196	None	IP Connection Congestion Timeout
1197	None	IP Connection refused
1198	None	IP Connection, Cannot resolve RHOST
1200	None	INW ALT card as first to be preloaded
1201	None	INW MAIN card as last to be reset
1202	None	INW Asserted DDL inhibition
1203	None	INW Card reset command issued
1204	None	INW Waiting for card loading validation
1205	None	INW Detected card loaded
1206	None	INW Detected card reset or removed
1207	None	INW Allowed card to skip DDL inhibited
1208	None	INW Removed DDL inhibition
1209	None	INW Card must be reset/removed/inhibited
1210	None	INW Card failed to reset
1211	None	INW Failed to assert DDL inhibition
1212	None	INW Failed to remove DDL inhibition
1213	None	INW Card failed to DDL crossload
1214	None	INW Allowed card to DDL crossload
1237	None	Dynamic database audit not current
1298	None	Updates inhibited: loading stability
1299	None	Updates allowed: loading stability
1300	None	REPT EVT: Incremental Loading
1308	None	Updates inhibited: Target-Cell CRC Fail
1309	None	Updates inhibited: Source-Cell CRC Fail

Table D-1. System Maintenance Unsolicited Output Message Groups (Continued)

UAM/UIM Number	Alarm Level	Message Text
1320	None	FPT value unprovisioned for frame
1321	None	Eagle RTDB Birthdate Mismatch
1322	None	Eagle RTDB Levels Invalid
1323	None	Eagle/Elap TN Quantity Mismatch
1324	None	Eagle/Elap NPANXX Quantity Mismatch
1325	None	Eagle/Elap LNRN Quantity Mismatch
1326	None	Eagle RTDB Depth Alert
1330	None	Mismatched UA Routing Context
1331	None	IP Route Table Entry Conflict
1333	None	IPGW RCVD MSG DISCARDED
1334	None	IPGW TX MSG DISCARDED
1335	None	Table Information
1336	None	IPGW UA ERROR MSG RECEIVED
1337	None	UA HEARTBEAT TIMEOUT
1338	None	SCCP did not route - no PC in CgPA
1339	None	SCCP did not route - no dflt Clg PC Set
1490	None	Telnet terminal connection successful
1491	None	Terminal enabled
1492	None	Terminal disabled

Table D-2. Link Maintenance Unsolicited Output Message Group

UAM/UIM Number	Alarm Level	Message Text
0084	Major	IP Connection Unavailable
0085	None	IP Connection Available
0086	Minor	IP Connection Congested
0087	None	IP Connection manually removed
0115	Major	Linkset IP TPS threshold exceeded
0116	Minor	Link expected IP TPS threshold exceeded
0118	None	Linkset IP TPS normal

Table D-2. Link Maintenance Unsolicited Output Message Group (Continued)

UAM/UIM Number	Alarm Level	Message Text
0119	None	Link IP TPS normal
0157	None	X25 logical channels available
0158	Minor	X25 no logical channels available
0200	None	RCVRY-LKF: link available
0201	Major	REPT-LKF: remote NE loopback
0202	Major	REPT-LKF: HWP - too many link interrupts
0203	Major	REPT-LKF: lost data
0204	Major	REPT-LKF: XER - SUERM threshold exceeded
0205	Major	REPT-LKF: APF - lvl-2 T1 expd (ready)
0206	Major	REPT-LKF: APF - lvl-2 T1 expd (not ready)
0207	Major	REPT-LKF: APF - lvl-2 T3 expired
0208	Major	REPT-LKF: APF - lvl-2 T2 expired
0209	Major	REPT-LKF: APF - failed proving period
0210	Major	REPT-LKF: OSA - received SIO
0211	Major	REPT-LKF: OSA - received SIN
0212	Major	REPT-LKF: OSA - received SIE
0213	Major	REPT-LKF: OSA - received SIOS
0214	Major	REPT-LKF: ABN - rcvd 2 of 3 invalid BSN
0215	Major	REPT-LKF: ABN - rcvd 2 of 3 invalid FIB
0216	Major	REPT-LKF: remote congestion timeout
0217	Major	REPT-LKF: excess acknowledge delay
0218	Major	REPT-LKF: COO - rcvd changeover order
0219	Major	REPT-LKF: false congestion restart
0220	Major	REPT-LKF: MTP link restart delayed
0221	Major	REPT-LKF: X25 link unavailable
0222	Major	REPT-LKF: remote FE loopback
0223	None	REPT-LKF: remote NE loopback cleared
0224	Major	REPT-LKF: link test failed
0230	Major	REPT-LKF: local blocked - thermal
0232	Major	REPT-LKF: remote blocked

Table D-2. Link Maintenance Unsolicited Output Message Group (Continued)

UAM/UIM Number	Alarm Level	Message Text
0233	Major	REPT-LINK-MANUAV: local blocked
0234	Major	REPT-LKF: RMI remote inhibited
0235	Major	REPT-LINK-MGTINH: local inhibited
0236	Major	REPT-LKF: not aligned
0237	Major	REPT-LKF: LM Timer NO-CREDIT expired
0238	Major	REPT-LKF: XDA-Timer NO-RESPONSE expired
0239	Major	REPT-LKF: MBL - local processor outage
0240	Major	REPT-LKF: rcvd SSCOP END-proc. outage
0241	Major	REPT-LKF: rcvd SSCOP END-out of service
0242	Major	REPT-LKF: rcvd SSCOP END-protocol error
0243	Major	REPT-LKF: rcvd SSCOP END-mgmnt initiated
0244	Major	REPT-LKF: FAC - DS1/E1 LOS failure
0245	Major	REPT-LKF: FAC - DS1/E1 LOF failure
0246	Major	REPT-LKF: FAC - DS1/E1 LCD failure
0247	Major	REPT-LKF: XER - ISERM threshold exceeded
0264	None	REPT-LINK-CGST: congestion level 0 to 1
0265	None	REPT-LINK-CGST: congestion level 1 to 2
0266	None	REPT-LINK-CGST: congestion level 2 to 3
0267	None	RCVRY-LINK-CGST: congestion level 3 to 2
0268	None	RCVRY-LINK-CGST: congestion level 2 to 1
0269	None	RCVRY-LINK-CGST: congestion has cleared
0270	None	REPT-LINK-CGST: discard level 0 to 1
0271	None	REPT-LINK-CGST: discard level 1 to 2
0272	None	REPT-LINK-CGST: discard level 2 to 3
0273	None	RCVRY-LINK-CGST: discard level 3 to 2
0274	None	RCVRY-LINK-CGST: discard level 2 to 1
0275	None	RCVRY-LINK-CGST: discard has cleared
0304	Minor	REPT-NMTSK-DSCD: SNM Discard Onset
0305	None	RECVY-NMTSK-DSCD: SNM Discard Abated
0306	Minor	SNM Overload Onset

Table D-2. Link Maintenance Unsolicited Output Message Group (Continued)

UAM/UIM Number	Alarm Level	Message Text
0307	None	SNM Overload Abated
0311	None	DPC is allowed
0312	Minor	DPC is restricted
0313	Critical	DPC is prohibited
0314	None	Route is allowed
0315	None	Route is restricted
0316	None	Route is prohibited
0317	None	RCVRY-LKSTO: link set allowed
0318	Major	REPT-LKSTO: link set prohibited
0319	Critical	REPT-MTPLP-DET: Circ rte det(cong)
0320	Critical	REPT-MTPLP-SUST: Sustained circ rte(cong)
0321	Minor	X-LIST occupancy threshold exceeded
0322	None	X-LIST occupancy below threshold
0324	None	DPC subsystem is allowed
0325	Critical	DPC subsystem is blocked
0326	Critical	DPC subsystem is prohibited
0327	None	DPC subsystem has been deleted
0332	Critical	DPC Subsystem is prohibited and blocked
0333	None	DPC Subsystem is Normal
0334	Critical	DPC Subsystem is Abnormal
0337	None	DPC-SS status changed
0338	Major	X-LIST space full-entry(s) discarded
0339	None	X-LIST space full condition abated
0340	None	RCVRY-MTPLP-RST:Circ rte status cleared
0369	Major	REPT-T1F:FAC-T1 unavailable
0376	Major	REPT-T1F:FAC-T1 LOS failure
0377	Major	REPT-T1F:FAC-T1 LOF failure
0378	Major	REPT-T1F:FAC-T1 Remote Alarm
0379	Major	REPT-T1F:FAC-T1 Alarm
0380	None	RCVRY-T1F:FAC-T1 available

Table D-2. Link Maintenance Unsolicited Output Message Group (Continued)

UAM/UIM Number	Alarm Level	Message Text
0381	Major	REPT-E1F:FAC-E1 LOS failure
0382	Major	REPT-E1F:FAC-E1 LOF failure
0383	Major	REPT-E1F:FAC-E1 AIS detected
0384	Major	REPT-E1F:FAC-E1 Far End Failure
0385	Major	REPT-E1F:FAC-E1 10E-3 BER failed
0386	None	RCVRY-E1F:FAC-E1 available
0387	Major	REPT-E1F:FAC-E1 unavailable
0399	None	RCVRY-LKSTO: Alarm clr'd by deleting SLK
0401	None	Alarm cleared by deleting SLK
0402	None	Alarm cleared by deleting route
0500	None	Alarm being cleared for this device
0532	None	RTX is allowed
0533	Minor	RTX is restricted
0534	Critical	RTX is prohibited
0535	Minor	IP Connection Restricted
0558	Critical	REPT-MTPLP-DET: Circ rte det (cong)
1016	None	MTP Adj PC not in routing table
1017	None	MTP Message Received for Network 255
1018	None	REPT-MTPERR: MTP received - invalid SIO
1070	None	SLTC failure: invalid Point Code (OPC)
1071	None	SLTC failure: invalid SLC
1072	None	SLTC failure: no response
1073	None	SLTC failure: bad data pattern
1075	None	MTP: link bypassed SLT phase
1076	None	SLTC failure: invalid Point Code (DPC)
1077	None	SLTC failure: failed link
1078	None	SLTC success: manual test passed
1079	None	SLTC aborted: unable to perform the test
1081	None	MTP: Changeback T5 timeout
1084	None	GWS MSU discarded by redirect function

Table D-2. Link Maintenance Unsolicited Output Message Group (Continued)

UAM/UIM Number	Alarm Level	Message Text
1085	None	GWS MSU too large to be redirected
1086	None	LFS test terminated with OAM switch over
1087	None	MTP RSTRT rcvd unexpected user traffic
1088	None	REPT-MTP-RSTRT: MTP Restart started
1089	None	RCVRY-MTP-RSTRT: MTP Restart Completed
1090	None	ITU GWY:CPC conversion failure
1091	None	ITU GWY:OPC conversion failure
1092	None	ITU GWY:H0H1 conversion failure
1093	None	ITU GWY:rcvd msg type cannot convert
1094	None	ITU GWY:Invalid ISUP msg structure
1095	None	ITU GWY:GRS buffer full
1096	None	ITU GWY:RSC buffer full
1097	None	ITU GWY:CGB buffer full
1100	None	GWS rcvd H0/H1 that is not allowed
1104	None	IP Connection Failed
1133	None	GX25 outbound data exceeds packet size
1134	None	GX25 route not found
1135	None	GX25 route not available
1136	None	GX25 route already connected
1137	None	GX25 incorrect X25 address
1138	None	GX25 unsupported packet type received
1139	None	GX25 unsupported MSU type received
1140	None	GX25 DPC not defined
1141	None	GX25 unrecognized X25 calling address
1142	None	GX25 unrecognized X25 called address
1143	None	GX25 cannot make connection
1144	None	GX25 logical channel cleared
1145	None	GX25 unexpected restart received
1146	None	REPT-XLST-TIMO: X-LIST entry expired
1147	None	MTP Invalid TFA received

Table D-2. Link Maintenance Unsolicited Output Message Group (Continued)

UAM/UIM Number	Alarm Level	Message Text
1148	None	MTP Invalid TFR received
1149	None	SLK Level-3 T19 timer expired
1150	None	SLK Inhibit denied
1151	None	SLK Inhibit response timeout
1152	None	SLK Uninhibit denied
1153	None	SLK Uninhibit response timeout
1154	None	MSU-received threshold exceeded
1155	None	MSU-rejected threshold exceeded
1156	None	Loopback success
1157	None	Loopback failed
1158	None	Loopback aborted
1159	None	Loopback in progress
1160	None	GWS rcvd ISUP that is not allowed
1170	None	Loopback prevented
1171	None	Loopback invalid
1172	None	REPT-OVSZMSG: SCCP MSU too large to route
1173	None	REPT-OVSZMSG: MTP MSU too large to route
1177	None	Cnvrsn Discard: SCCP MSU too large
1184	None	Cnvrsn Discard: Invalid SCCP element len
1233	None	MTP Invalid ITU TFR RCVD
1305	None	MTP rcvd UPU-User SCCP, Cause invalid
1332	None	Invalid Initial M2PA FSN Received

Table D-3. Card Unsolicited Output Message Group

UAM/UIM Number	Alarm Level	Message Text
0001	Major	Card has reset
0008	Major	Active MASP has become isolated
0009	None	MASP became active
0010	None	MASP became standby

Table D-3. Card Unsolicited Output Message Group (Continued)

UAM/UIM Number	Alarm Level	Message Text
0013	Major	Card is isolated from the system
0014	None	Card is present
0021	Minor	Clock A for card failed, Clock B normal
0022	Minor	Clock B for card failed, Clock A normal
0023	Minor	Clocks A and B for card failed
0024	None	Clock A for card normal
0025	None	Clock B for card normal
0026	None	Clocks A and B for card normal
0033	None	Card database has been corrected
0034	Minor	Card database is inconsistent
0035	Minor	Card database is corrupted
0036	None	Card backup database has been corrected
0037	Minor	Card backup database is inconsistent
0038	Minor	Card backup database is corrupted
0053	Major	Standby TDM failure
0054	None	Standby TDM failure cleared
0055	Minor	Persistent device state tbl corrupt
0056	Minor	Persistent device state tbl diff version
0057	None	Persistent device state tbl corrected
0077	Critical	Card temperature is critical lvl:T2
0078	Major	Card temperature above nominal
0079	None	Card temperature within nominal levels
0092	Critical	MDAL not responding
0093	None	MDAL alarm cleared
0096	None	Card has been reloaded
0099	Major	Incompatible HW for provisioned slot
0102	Minor	Motherboard BIP invalid
0103	None	Motherboard BIP valid
0130	None	Card successfully loaded with data
0132	Major	Loading failed: table not found

Table D-3. Card Unsolicited Output Message Group (Continued)

UAM/UIM Number	Alarm Level	Message Text
0133	Major	Loading failed: data read Error
0134	Major	Loading failed: bad checksum returned
0135	Major	Loading failed: GPL load timeout
0136	Major	Loading failed: data load timeout
0137	Major	Loading failed: invalid GPL
0138	Major	Loading failed: GPL format error
0139	Major	Loading failed: disk read prep error
0140	Major	Loading failed: disk read response error
0141	Major	Loading failed: disk read failed
0145	Minor	HS Clock A for card failed, B normal
0146	Minor	HS Clock B for card failed, A normal
0147	Minor	High Speed Clocks A & B for card failed
0148	None	High Speed Clock A for card normal
0149	None	High Speed Clock B for card normal
0159	None	High Speed Clocks A & B for card normal
0297	Major	Incorrect LIM port configuration
0298	Minor	Card not using config. SCTP csum method
0299	None	Config. SCTP csum method alarm cleared
0300	Major	TVG Grant Failure
0301	None	TVG Grant Recovery
0400	None	Alarm cleared by deleting card
0422	Major	Insufficient memory for LNP
0423	None	Card reload attempted
0441	Major	Incorrect MDB - CPU
0442	Critical	RTDB database capacity is 95% full
0443	Major	RTDB database is corrupted
0444	Minor	RTDB database is inconsistent
0445	None	RTDB database has been corrected
0446	Major	RTDB database capacity is 80% full
0447	None	RTDB database memory alarm cleared

Table D-3. Card Unsolicited Output Message Group (Continued)

UAM/UIM Number	Alarm Level	Message Text
0448	Minor	RTDB database is incoherent
0449	Major	RTDB resynchronization in progress
0451	Major	RTDB reload is required
0452	Major	Exceeded Service Error Threshold Lvl1
0453	Critical	Exceeded Service Error Threshold Lvl 2
0454	None	Service Error Threshold Alarm Cleared
0492	Minor	RTDB database is 80% full
0493	Major	RTDB database is 100% full
0500	None	Alarm being cleared for this device
0901	Major	Card DB load timeout, check GLS card
0902	None	Card DB is stable
0903	Major	IP Link A is down
0904	None	IP Link A is up
0905	Major	IP Link B is down
0906	None	IP Link B is up
0907	None	HW limiting TPS rate alarm cleared
0908	Major	HW cannot support purchased TPS rate
1082	None	Amem single bit error report
1238	None	Full database reload initiated
1239	None	LNP updates inhibited: loading stablility
1240	None	LNP updates allowed: loading stability

Table D-4. Application Subsystem Unsolicited Output Message Group

UAM/UIM Number	Alarm Level	Message Text
0283	Major	LNP Ported LRNs approaching Feat. Capacity
0284	None	LNP Ported LRNs Capacity Normal
0285	Major	LNP Ported NPAs approaching Feat. Capacity
0286	None	LNP Ported NPAs Capacity Normal

Table D-4. Application Subsystem Unsolicited Output Message Group (Continued)

UAM/UIM Number	Alarm Level	Message Text
0287	Critical	RTDB Tablle Level 2 FAK Cap Exceeded
0288	Major	RTDB Table Level 1 FAK Cap Exceeded
0289	None	RTDB Table FAK Capacity Normal
0394	None	Local Subsystem is available
0395	Critical	Local Subsystem is not available
0396	Critical	Local Subsystem is disabled
0397	None	Local Subsystem is removed
0398	Minor	Local Subsystem normal, card(s) abnormal
0424	Critical	LNP Subsystem is not available
0425	None	LNP Subsystem normal, card(s) abnormal
0426	None	LNP Subsystem is available
0434	None	LNP Subsystem is removed
0435	Critical	LNP Subsystem is disabled
0436	Major	LNP ACG node overload
0452	Major	Exceeded Service Error Threshold Lvl 1
0453	Critical	Exceeded Service Error Threshold Lvl 2
0454	Normal	Service Error Threshold Alarm Cleared
0455	Critical	EIR Subsystem is not available
0456	Critical	EIR Subsystem is disabled
0457	Minor	EIR Subsystem normal,card(s) abnormal
0458	None	EIR Subsystem is available
0459	None	EIR Subsystem removed
0526	None	Service is available
0527	Minor	Service abnormal
0528	Critical	Service is not available
0529	Critical	Service is disabled
0530	None	Service is removed
0500	None	Alarm being cleared for this device
1030	None	Inh EIR SS request already outstanding

Table D-4. Application Subsystem Unsolicited Output Message Group (Continued)

UAM/UIM Number	Alarm Level	Message Text
1031	None	Failure Inhibiting EIR SS
1102	None	Invalid Length for Map IMEI Parameter
1103	None	LSS:No Map IMEI Parameter present
1118	None	Audit of LNP backup database completed
1119	None	LNP database audit - internal error
1121	None	LNP rcvd query from unknown CGPA PC
1122	None	LNP rcvd query with undefined TT
1123	None	LNP rcvd query with Message Relay TT
1124	None	LNP Database IMPORT started
1164	None	Inh LNP SS request already outstanding
1165	None	Failure Inhibiting LNP SS
1166	None	ACG Node Overload Level Change
1169	None	SCCP rcvd inv TCAP portion
1174	None	Inh Local SS request already outstanding
1175	None	Failure Inhibiting Local SS
1241	None	REPT EVT:LNP Incremental Loading
1242	None	Conv to intl num - Dflt CC not found
1243	None	Conv to intl num - Dflt NC not found
1244	None	Conv to intl num - Dflt MCC not found
1245	None	Conv to intl num - Dflt MNC not found
1246	None	Invalid length of conditioned digits
1247	None	Conversion of MGT to IMSI not possible
1255	None	IS-41 LNP Qry rejected: WNP is OFF
1256	None	MNP Circular Route detected
1260	None	LSS: Unsupported TCAP msg type
1261	None	LSS: Invalid len in transaction portion
1262	None	LSS: Invalid len in dialogue portion
1263	None	LSS: Invalid len in component portion
1264	None	LSS: No originating transaction ID

Table D-4. Application Subsystem Unsolicited Output Message Group (Continued)

UAM/UIM Number	Alarm Level	Message Text
1265	None	LSS: Invalid transaction ID len
1266	None	LSS: Destination transaction ID in Begin
1267	None	LSS: No External element
1268	None	LSS: No External Object Identifier
1269	None	LSS: Not Structured Dialogue
1270	None	LSS: No External ASN1-Type
1271	None	LSS: No Dialogue Request
1272	None	LSS: No Application Context Name
1273	None	LSS: No ACN Object Identifier
1274	None	LSS: No component portion
1275	None	LSS: First component not an Invoke
1276	None	LSS: No Invoke ID
1277	None	LSS: No operation code
1278	None	LSS: No parameter (set/sequence)
1279	None	LSS: Unsupported network type
1280	None	LSS: Unsupported SCCP msg type
1281	None	LSS: No SCCP CDPA SSN
1282	None	LSS: Unsupported SCCP CDPA GTI
1283	None	LSS: Unsupported SCCP CGPA RI
1284	None	LSS: Unknown SSP PC
1285	None	LSS: No SCCP CGPA SSN
1286	None	LSS: Invalid INAP CalledPartyNumber len
1287	None	LSS: Unsupported ACN Object ID len
1288	None	LSS: Unsupported operaton code
1289	None	LSS: No parameter sequence
1290	None	LSS: No INAP ServiceKey parameter
1291	None	LSS: No INAP CalledPartyNumber parameter
1292	None	LSS: Parameters out of sequence
1293	None	LSS: Linked ID in query

Table D-4. Application Subsystem Unsolicited Output Message Group (Continued)

UAM/UIM Number	Alarm Level	Message Text
1294	None	Invalid digits in MAP MSISDN parameter
1295	None	Translation PC is EAGLE's
1296	None	Translation PC type is ANSI
1297	None	Invalid length of prefix/suffix digits
1306	None	GSMOPTS: EIR Global Response in ON
1307	None	GSMOPTS: EIR Global Response in OFF

Table D-5. GTT Unsolicited Output Message Group

UAM/UIM Number	Alarm Level	Message Text
0328	None	SCCP is available
0329	None	SCCP capacity normal, card(s) abnormal
0330	Major	System SCCP TPS Threshold exceeded
0331	Critical	SCCP is not available
0335	None	SCCP is removed
0336	Major	LIM(s) have been denied SCCP service
0437	Critical	System SCCP TPS Capacity Exceeded
0500	None	Alarm being cleared for this device
1019	None	SCCP rcvd invalid UDTS/XUDTS msg
1020	None	SCCP rcvd invalid XUDT msg
1021	None	SCCP rcvd invalid XUDTS msg
1023	None	SCCP rcvd unknown msg type
1024	None	SCCP rcvd inv msg length
1025	None	SCCP rcvd inv msg class
1029	None	SCCP rcvd inv Cld Party - bad GT ind
1033	None	SCCP rcvd inv Cld Party - bad network
1034	None	SCCP rcvd inv Cld Party - no SSN
1035	None	SCCP rsp did not route - invalid GTI
1036	None	SCCP rsp did not route - invalid TT
1037	None	SCCP rsp did not route - bad Xlation

Table D-5. GTT Unsolicited Output Message Group (Continued)

UAM/UIM Number	Alarm Level	Message Text
1038	None	SCCP rsp did not route - SSP not True PC
1039	None	SCCP rsp did not route - bad Selectors
1040	None	ITU <-> ANSI translation not supported
1041	None	SCCP did not route - no SSN in msg or DB
1042	None	SCCP rcvd inv GT - invalid Trans. Type
1043	None	SCCP did not route - bad translation **NOTE: If the UIMRD field in `rtrv-stpopts` is set to yes, this message is output in the UIM Redirect output group (see Table D-12). Otherwise, this message is output in the System Maintenance output group.**
1044	None	SCCP did not route - DPC OOS
1045	None	SCCP did not route - DPC congested
1046	None	SCCP did not route - DPC not in MAP tbl
1047	None	SCCP did not route - SS OOS
1048	None	SCCP did not route - SS congested
1049	None	SCCP did not route - SS not in MAP tbl
1050	None	SCCP-CNV: Unable to convert ANSI CDPA GT
1051	None	SCCP-CNV: Unable to convert ANSI CGPA GT
1052	None	SCCP-CNV: Unable to convert ITU CDPA GT
1053	None	SCCP-CNV: Unable to convert ITU CGPA GT
1054	None	SCCP rcvd inv LSS - bad SSN
1055	None	SCCP rcvd inv SCMG - bad AFTPC
1056	None	SCCP rcvd inv SCMG - bad subsystem
1057	None	SCCP rcvd inv SCMG - bad length
1058	None	SCCP rcvd inv SCMG - bad msg type
1063	None	SCCP screen set is too large
1107	None	SCCP XUDT (S) msg: Hop Counter violation
1108	None	SCCP XUDT (S) msg: inv opt portion len
1109	None	XUDT(S) msg: inv segmentation parm
1178	None	Cnvrsn Discard: Invalid SCCP msg type
1179	None	Cnvrsn Discard: CGPA PC alias undefined

Table D-5. GTT Unsolicited Output Message Group (Continued)

UAM/UIM Number	Alarm Level	Message Text
1180	None	Cnvrsn Discard: Aft. PC alias undefined
1181	None	Cnvrsn Discard: Invalid SCMG msg type
1182	None	Cnvrsn Discard: Invalid TCAP element
1183	None	Cnvrsn Discard: Invalid TCAP element len
1189	None	SCCP did not route: DPC not in RTE table
1190	None	SCCP rcvd inv Clg Party - bad GT ind
1191	None	SCCP rcvd inv Clg Party - bad selectors
1192	None	SCCP translation found: XLAT=UDTS
1193	None	SCCP translation found: XLAT=DISC
1195	None	SCCP did not route: DPC/SS not in Mapset
1219	None	SCCP rcvd inv Cld Party - bad GT ind
1220	None	SCCP rcvd inv Cld Party - bad network
1221	None	SCCP rcvd inv Cld Party - no SSN
1222	None	SCCP rcvd inv Cld Party - bad Selectors
1223	None	SCCP rcvd inv Cld Party - bad Xlation
1224	None	SCCP rcvd inv Cld Party - bad SSN
1225	None	SCCP did not route - DPC OOS
1226	None	SCCP did not route - DPC congested
1227	None	SCCP did not route - DPC not in MAP tbl
1228	None	SCCP did not route - SS OOS
1229	None	SCCP did not route - SS congested
1230	None	SCCP did not route - SS not in MAP tbl
1231	None	SCCP Encode Failure
1232	None	SCCP Encode Failure 2
1248	None	GSM Map Screening rcvd unknown orig
1249	None	SCCP rcvd GSM Map Opcode w/ forbid param
1250	None	SCCP rcvd undefined Map Op-Code

Table D-6. GWS Unsolicited Output Message Group

UAM/UIM Number	Alarm Level	Message Text
0290	None	GLS is available
0291	Major	GLS is at minimum service limit
0292	Critical	GLS is not available
0293	None	GLS have been removed from the system
0500	None	Alarm being cleared for this device
1005	None	GWS rcvd OPC that is not allowed
1006	None	GWS rcvd DPC that is not allowed
1007	None	GWS rcvd OPC that is blocked
1008	None	GWS rcvd DPC that is blocked
1009	None	GWS rcvd SIO that is not allowed
1010	None	GWS rcvd a priority that is not allowed
1011	None	GWS rcvd TFC, AFTPC not in routing tbl
1012	None	GWS rcvd Clg Party that is not allowed
1013	None	GWS rcvd Cld Party that is not allowed
1014	None	GWS rcvd Translation Type not allowed
1015	None	GWS rcvd SCMG with not allowed AFTPC
1060	None	Map Screening cannot generate ATIERR
1062	None	Text string with screen set name & line #(<screen set name> too large)
1064	None	GWS rcvd TFP, AFTPC not in routing tbl
1065	None	GWS rcvd TFR, AFTPC not in routing tbl
1066	None	GWS rcvd TFA, AFTPC not in routing tbl
1067	None	GWS rcvd UPU, AFTPC not in routing tbl
1068	None	GWS rcvd RSP, AFTPC not in routing tbl
1069	None	GWS rcvd RSR, AFTPC not in routing tbl
1110	None	GWS rcvd AFTPC that is not allowed
1111	None	GWS rcvd TCA, AFTPC not in routing tbl
1112	None	GWS rcvd TCR, AFTPC not in routing tbl
1113	None	GWS rcvd TCP, AFTPC not in routing tbl
1125	None	GWS rcvd CDPA that could not be RDCTd

Table D-6. GWS Unsolicited Output Message Group (Continued)

UAM/UIM Number	Alarm Level	Message Text
1126	None	GWS rcvd CGPA that could not be RDCTd
1127	None	GWS rcvd AFTPC that could not be RDCTd
1128	None	GWS rcvd TT that could not be RDCTd
1161	None	GWS rcvd nonSNM msg in DESTFLD screening
1162	None	GWS rcvd nonSCCP msg in CGPA/CDPA screen
1163	None	GWS rcvd invalid GTI in TT screening
1215	None	GWS rcvd CDPA that could not be CNCFd
1216	None	GWS rcvd CGPA that could not be CNCFd
1217	None	GWS rcvd AFTPC that could not be CNCFd
1218	None	GWS rcvd TT that could not be CNCFd
1258	None	Map Screening cannot Forward MSU
1259	None	Map Screening cannot Duplicate MSU
1301	None	SECMTPMATE - rcvd mate PC on non C-link
1302	None	SECMTPSID - rcvd MSU with OPC = SID
1303	None	SECMTPSNM - no rte to OPC/AFTPC
1304	None	SECSCCPSCMG - no rte to AFTPC

Table D-7. Clock Unsolicited Output Message Group

UAM/UIM Number	Alarm Level	Message Text
0113	None	Clock alarm(s) cleared
0128	Critical	All clocks have failed
0160	Minor	1116-S clock failed
0161	Minor	1116-P clock failed
0162	Major	1116-P, 1116-S clocks failed
0163	Minor	1114-S clock failed
0164	Major	1114-S, 1116-S clocks failed
0165	Minor	1114-S, 1116-P clocks failed
0166	Major	1114-S, 1116-P, 1116-S clocks failed
0167	Minor	1114-P clock failed

Table D-7. Clock Unsolicited Output Message Group (Continued)

UAM/UIM Number	Alarm Level	Message Text
0168	Minor	1114-P, 1116-S clocks failed
0169	Major	1114-P, 1116-P clocks failed
0170	Major	1114-P, 1116-P, 1116-S clocks failed
0171	Major	1114-P, 1114-S clocks failed
0172	Major	1114-P, 1114-S, 1116-S clocks failed
0173	Major	1114-P, 1114-S, 1116-P clocks failed
0183	Minor	1116-SHS clock failed
0184	Minor	1116-PHS clock failed
0185	Major	1116-PHS, 1116-SHS clocks failed
0186	Minor	1114-SHS clock failed
0187	Major	1114-SHS, 1116-SHS clocks failed
0188	Minor	1114-SHS, 1116-PHS clocks failed
0189	Major	1114-SHS, 1116-PHS, 1116-SHS clks failed
0190	Minor	1114-PHS clock failed
0191	Minor	1114-PHS, 1116-SHS clocks failed
0192	Major	1114-PHS, 1116-PHS clocks failed
0193	Major	1114-PHS, 1116-PHS, 1116-SHS clks failed
0194	Major	1114-PHS, 1114-SHS clocks failed
0195	Major	1114-PHS, 1114-SHS, 1116-SHS clks failed
0196	Major	1114-PHS, 1114-SHS, 1116-PHS clks failed
0197	Critical	All High Speed Clocks have failed
0198	None	High Speed Clock Alarm(s) Cleared
0403	Major	1114 E1/T1 clock requires TDM-GTI
0404	Major	1116 E1/T1 clock requires TDM-GTI
0405	Major	1114, 1116 E1/T1 clock requires TDM-GTI
0406	Major	1114 Clock selection mismatch
0407	Major	1116 Clock selection mismatch
0408	Major	1114, 1116 Clock selection mismatch
0409	None	Clock configuration corrected
0500	None	Alarm being cleared for this device

Table D-7. Clock Unsolicited Output Message Group (Continued)

UAM/UIM Number	Alarm Level	Message Text
1185	None	GTI input clock anomalies detected

Table D-8. Measurements Maintenance Unsolicited Output Message Group

UAM/UIM Number	Alarm Level	Message Text
0179	Minor	NDC Q.3 association is Unavailable
0180	None	NDC Q.3 association is Available
0181	Critical	NDC system is Unavailable
0182	None	NDC system is Available
0500	None	Alarm being cleared for this device
0516	Minor	Degraded Mode - 1 card failed
0517	Major	Degraded Mode - multiple cards failed
0518	Critical	Measurements subsystem unavailable
0519	None	Measurements subsystem available
1022	None	System Meas limit exceeded for LSONISMT
1026	None	System Meas. limit exceeded for LSORIGNI
1027	None	System Meas. limit exceeded for LSDESTNI
1028	None	System Meas. limit exceeded for ORIGNET
1061	None	Meas sync not allowed from old version
1080	None	disk measurement status unreadable
1199	None	LNP DTH Measurements Discarded for DPC
1234	None	LNP Day Meas. Discarded for NPANXX
1251	None	Measurements data copy failure
1252	None	Report generation failure
1253	None	Report transfer failure FTP Server
1254	None	Scheduled transer failure
1310	None	System Meas. Limit exceeded for LRN
1311	None	System Meas. Limit exceeded for NPANXX

Table D-9. LNP Database Unsolicited Output Message Group

UAM/UIM Number	Alarm Level	Message Text
0427	Minor	LNP database is corrupted
0428	Minor	Backup LNP database is corrupted
0429	Minor	LNP database is inconsistent
0430	Minor	Backup LNP database is inconsistent
0431	None	LNP database has been corrected
0432	None	Backup LNP database has been corrected
0500	None	Alarm being cleared for this device
1074	None	SCCP rcvd inv SCMG - invalid SOR
1167	None	LNP database audit is disabled
1168	None	Audit of LNP database completed
1495	None	Awaiting LSMS Bulk Download
1496	None	LSMS Bulk Download in progress
1497	None	LSMS Bulk Download complete
1498	None	LSMS Bulk Download cancelled at LSMS

Table D-10. Security Administration Unsolicited Output Message Group

UAM/UIM Number	Alarm Level	Message Text
0174	Minor	%full threshold reached - upload required
0175	Minor	LOGBUFROVFL-SECULOG -upload required
0176	Minor	Stdby security log -- upload required
0177	None	Security log exception cleared
0178	None	Security log failed
0199	None	OA&M IP Security feature disabled
0500	None	Alarm being cleared for this device
1493	None	SSH Host Keys Regenerated
1494	None	SSH Host Keys Loaded

Table D-11. Program Update Unsolicited Output Message Group

UAM/UIM Number	Alarm Level	Message Text
1083	None	REPT COND: system alive
1340	None	REPT COND: TRBL resynch required

Table D-12. UIM Redirect Unsolicited Output Message Group

UAM/UIM Number	Alarm Level	Message Text
1043	None	SCCP did not route - bad translation
NOTE: The UIM Redirect output message group is used only if the UIMRD field in `rtrv-stpopts` is set to yes. Otherwise, this message is output in the System Maintenance output group (see Table D-1).		

Table D-13. Database Unsolicited Output Message Group

UAM/UIM Number	Alarm Level	Message Text
1114	None	Database BACKUP started
1115	None	Database RESTORE started
1116	None	Database action ended - OK
1117	None	Database action ended - FAIL
1257	None	DB restore has cleared and Disabled PDS

Table D-14. MPS Unsolicited Output Message Group

UAM/UIM Number	Alarm Level	Message Text
0041	Critical	LNP DB Maintenance required
0042	None	LSMS bulk load complete
0250	None	MPS available
0261	Critical	MPS unavailable
0355	None	LSMS is available
0356	Critical	LSMS unavailable
0357	None	All OAP terminals are removed
0358	Major	LSMS connection unavailable

Table D-14. MPS Unsolicited Output Message Group (Continued)

UAM/UIM Number	Alarm Level	Message Text
0359	None	LSMS connection available
0362	Major	LSMS is at min service limit
0370	Critical	Critical Platform Failure(s)
0371	Critical	Critical Application Failure(s)
0372	Major	Major Platform Failure(s)
0373	Major	Major Application Failure(s)
0374	Minor	Minor Platform Failure(s)
0375	Minor	Minor Application Failure(s)
0500	None	Alarm being cleared for this device

Table D-15. Monitor Unsolicited Output Message Group

UAM/UIM Number	Alarm Level	Message Text
0051	Major	TSC sync is in simplex mode
0052	None	TSC sync feature is available
0088	Major	Clocks A and B TSCs are out of sync
0089	None	Clocks A and B TSCs are resynchronized
0468	Critical	All STC Networks Unavailable
0469	Critical	All STC Cards Unavailable
0470	None	EROUTE is Removed
0471	None	EROUTE System is Available
0472	Minor	EROUTE System Threshold Exceeded
0473	Major	EROUTE System Capacity Exceeded
0474	None	EROUTE capacity normal card(s) abnormal
0475	Minor	NTP Time Unavailable
0476	None	NTP Time Available
0477	Minor	Congestion: Copy Function De-activated
0478	None	Copy Function Activated
0479	None	Link not Monitored
0480	Minor	Timestamp Invalid

Table D-15. Monitor Unsolicited Output Message Group (Continued)

UAM/UIM Number	Alarm Level	Message Text
0481	None	Timestamp Valid
0482	Major	Card(s) have been denied EROUTE service
0500	None	Alarm being cleared for this device
0531	Minor	Insufficient HW Copy Function Inhibited

Table D-16. SLAN Maintenance Unsolicited Output Message Group

UAM/UIM Number	Alarm Level	Message Text
0150	None	STPLAN is available
0151	None	STPLAN capacity normal, card(s) abnormal
0152	Major	LIM(s) have been denied STPLAN service
0153	Critical	STPLAN not available
0154	None	STPLAN is removed
0155	Minor	STPLAN connection unavailable
0156	None	STPLAN connection available
0500	None	Alarm being cleared for this device
1132	None	STPLAN DLK ping test completed

Table D-17. SEAS Maintenance Unsolicited Output Message Group

UAM/UIM Number	Alarm Level	Message Text
0341	Major	OAP unavailable
0342	Major	SEAS UAL unavailable
0343	Major	SEAS X.25 Link unavailable
0344	Minor	SEAS PVC unavailable
0345	Major	All SEAS UAL sessions unavailable
0346	Minor	SEAS UAL session unavailable
0347	None	SEAS X.25 Link is available
0348	Major	SEAS is at min service limit
0349	Critical	SEAS unavailable
0350	Critical	OAP terminals inhibited

Table D-17. SEAS Maintenance Unsolicited Output Message Group (Continued)

UAM/UIM Number	Alarm Level	Message Text
0351	None	SEAS is available
0352	None	SEAS is removed
0353	None	OAP is available
0354	Major	One OAP terminal unavailable
0360	Major	EMS Agent unavailable
0361	None	EMS Agent available
0363	Minor	OAP filesystem full
0364	Minor	Config. data checksum mismatch
0365	None	Config. data checksum alarm cleared
0500	None	Alarm being cleared for this device
1099	None	Text string that was received from the OAP

E

Auto-Inhibit HW Verification Codes

Contents ..... Page

Introduction E-2

Introduction

This appendix provides a list of the auto-inhibit hardware verification codes used in the card device format. Table E-1 contains a list of the hardware verification codes that appear in certain UAMs, and shows the card or application that it applies to, a description of the code, and the UAM code with which it is associated.

Table E-1. Hardware Verification Codes

Verification Code	Card or Application	Description	Associated UAM Code
002	VSCCP	VSCCP card equipped w/non-DSM MPS feat on (see Note)	0099
003	VSCCP	VSCCP card equipped w/non-DSM LNP & VGTT feat on (see Note 1)	0099
004	VSCCP	VSCCP card equipped w/non-DSM XGTT1MIL feat on (see Note 1)	0099
005	VSCCP	VSCCP card equipped w/non-DSM when EGMS enabled	0099
025	SCCP	SCCP card equipped w/ASM when EGTT on	0441
050	VSCCP	VSCCP card equipped w/no daughterboards	0099
051	VSCCP	VSCCP card equipped w/ < 4GB when ≥ LNP48MIL on	0422
052	VSCCP	VSCCP card equipped w/ < 3GB when ≥ LNP36MIL on	0422
053	VSCCP	VSCCP card equipped w/ < 2GB when 300+ NPA & 150+LRN feature ON	0422
054	SCCP EBDA	SCCP or EBDA card w/ < 2GB when LNP24MIL on	0422
055	SCCP EBDA	SCCP or EBDA card DB memory insufficient for LNP 4 MIL (Requires a minimum of 512 MB)	0422
056	SCCP EBDA	SCCP or EBDA card DB memory insufficient for LNP 6 MIL (Requires a minimum of 768 MB)	0422
057	SCCP EBDA	SCCP or EBDA card DB memory insufficient for LNP 8-12 MIL (Requires a minimum of 1024 MB)	0422
058	SCCP	SCCP card equipped w/ < 256K or > MAX of extended memory	0422
059	VSCCP	MPS database has been detected to exceed capacity of DSM extended memory (only for GPORT, GFLEX, INP, and EIR features). UAMs 281, 283, and 285 used for LNP, ELAP config.	0422
100	SS7IPGW IPGWI	DCM w/ IP connection on B port only when debug enabled	0276

NOTE: A card with Verification Code 002, 003, 004, 005, or 102 may possibly begin to boot continually before this alarm is displayed.

Table E-1. Hardware Verification Codes (Continued)

Verification Code	Card or Application	Description	Associated UAM Code
101	SS7IPGW, IPGWI, IPLIM, IPLIMI	DCM only supports SLK link A and B -OR- EDCM only supports SLK link A-A3 and B-B3 -OR- E5-ENET only supports SLK link A-A11 and B-B11	0276
102	SS7IPGW IPGWI	Non-DCM detected in slot (see Note 1)	0099
103	SS7IPGW, IPGWI, IPLIM, IPLIMI	DCM does not support >2 associations (IPLIMx) -OR- DCM does not support >4 associations (IPGWx) -OR- EDCM does not support >8 associations (IPLIMx) -OR- EDCM does not support >50 associations (IPGWx) -OR- E5-ENET does not support >24 associations (IPLIMx) -OR- E5-ENET does not support >50 associations (IPGWx)	0276
104	SS7IPGW, IPGWI, IPLIM, IPLIMI	DCM does not support >2 sockets (IPLIMx) -or- DCM does not support >50 sockets (IPGWx) -or- EDCM does not support >8 sockets (IPLIMx) -or- EDCM does not support >50 sockets (IPGWx) -or- E5-ENET does not support >0 sockets (IPLIMx) -or- E5-ENET does not support >0 sockets (IPGWx)	0276
105	SS7IPGW, IPGWI, IPLIM, IPLIMI	DCM does not support >2 (sockets + associations) (IPLIMx) -OR- DCM does not support >50 (sockets + assoc*****) (IPGWx) -OR- EDCM does not support >8 (sockets + associations) (IPLIMx) -OR- EDCM does not support >50 (sockets + associations) (IPGWx) Note: *assoc = 8 X associations	0276
	NOTE: A card with Verification Code 002, 003, 004, 005, or 102 may possibly begin to boot continually before this alarm is displayed.		

Table E-1. Hardware Verification Codes (Continued)

Verification Code	Card or Application	Description	Associated UAM Code
106	SS7IPGW, IPGWI, IPLIM, IPLIMI	DCM does not support >64Kb SCTP buffers (IPLIMx) -or- DCM does not support >64Kb SCTP buffers (IPGWx) -or- EDCM does not support >1600Kb SCTP buffers (IPLIMx) -or- EDCM does not support >800Kb SCTP buffers (IPGWx) -or- E5-ENET does not support >3200Kb SCTP buffers (IPLIMx) -or- E5-ENET does not support >3200Kb SCTP buffers (IPGWx)	0276
110	SS7IPGW IPGWI	(SRKQ + DRKQ > 1000) not supported on DCM	0276
119	LIME1	2 port E1 card provisioned w/ ports > 2 (slk prov on port A1-B3)	0297
120	LIMDS0	2 port LIM card provisioned w/ ports > 2 (slk prov on port A1-B3)	0297
121	LIME1	2 port LIM card not support MIM w/E1 port AMI encoding provisioned.	0297
122	MIM	Card is not a MIM - provisioned as T1 or T1 chan associated with T1	0099
123	MPL	MPL can't run w/ port A or B provisioned for speeds ¹ 56K	0297
124	MIM HC MIM	Card is not a MIM or HC MIM and is provisioned as a T1 card	0099
125	MIM MPL	MIM/MPL card with SLK provisioned on link greater than B3.	0297
126	LIME1	2 Port E1 card with an SLK provisioned on E1 port 2-7	0297
127	MIM	MIM card with an SLK provisioned on E1/T1 port 2-7	0297
128	HC MIM	Fan feature bit must be ON for HC MIM	0043
129	HC-MIM / E5-E1T1	Card does not support CAS framing	297
130	LIME1 MIM	Card is not a LIME1 or MIM and is provisioned as and E1 channel card.	0099
131	HC-MIM / E5-E1T1	Card has channel bridging mode active but is not running supported high capacity gpl	0297
132	MPL	Card is not a LIME1 or MIM and is provisioned as and E1 card.	0099
133	LIME1 LIMDS0 MIM MPL	Card cannot support unchannelized mode.	0099

NOTE: A card with Verification Code 002, 003, 004, 005, or 102 may possibly begin to boot continually before this alarm is displayed.

Table E-1. Hardware Verification Codes (Continued)

Verification Code	Card or Application	Description	Associated UAM Code
134	E5-E1T1	E5-E1T1 card with SLK provisioned on link > B15	0099
135	E5-E1T1	E5-E1T1 card supports only 1 SE-HSL link	0276
140	MCP	MCP card not running with D2G memory ≠	0422
141	IPS	IPS card not running with D1G memory	0422
150	ASM	Card is obsolete	0047
160	MCP	MCP card has Incorrect Motherboard. The application must run on an EDSM card.	0441
180	IPLIM, SCCP, SS7ANSI	IPLIM card equipped w/ double slot DCM with MOBR on -or- SCCP card equipped with TSM with MOBR on -or- SS7ANSI card equipped with one of the following with MOBR on: LIMDS0/LIMV35/LIMOCU/LIM-AINF/ILA/EILA/LIME1	0441

NOTE: A card with Verification Code 002, 003, 004, 005, or 102 may possibly begin to boot continually before this alarm is displayed.

F

UAM Balancing Matrix

Contents ..... Page

Introduction F-2

Alarms F-2

Introduction

The tables in this appendix list Critical, Major, Minor, and Normal alarms that appear for device conditions, and indicate the clearing alarm that appears when each condition is resolved in the system. (Some device conditions are categorized as Normal, and have an associated clearing alarm when the device changes to another Normal condition.)

NOTE: A generic clearing alarm, UAM 0500 "Alarm being cleared for this device," addresses scenarios where an alarm used to silently remove an active alarm did not make sense for the condition that was being cleared. This UAM is a generic alarm clearing output that applies to all setting alarms (Critical, Major, and Minor).

Alarms

This section lists the following alarm types in alphabetical order:

- Card Alarms
- CDT (Customer Defined Trouble) Alarms
- Clock (Holdover) Alarms
- Clock System Alarms
- DCM Alarms
- DLK Alarms
- DPC Alarms
- DPC System Alarms
- DSM Alarms
- E1 Port Alarms
- EIR Alarms
- EMAP Alarms
- EMAP (NDC) Alarms
- EROUTE Alarms
- Frame Alarms
- Fuse Alarms
- GLS Alarms
- GPL Alarms
- HS Clock System Alarms
- IMT Bus Alarms

- IMT System Alarms
- INP System Alarms
- IP7 Alarms
- IP Connection Alarms
- IP TPS System Alarms
- IP7 System Alarms
- Linkset Alarms
- LNP System Alarms
- LSMS Connection Alarms
- LSMS System Alarms
- MCPM Alarms
- MEAS System Alarms
- MPS (ELAP/EPAP) Alarms
- MPS Alarm Support
- NDC System Alarms
- RTX System Alarms
- SCCP System Alarms
- SCCP Service Alarms
- SEAS OAP Alarms
- SEAS System Alarms
- SEAS X25 Alarms
- Security Log Alarms
- Security System Alarms
- SLK Alarms
- STPLAN Alarms
- System Alarms
- System GPL Alarms
- T1 Port Alarms
- Terminal Alarms
- X-LIST Alarms

Card Alarms

Table F-1 shows the critical and major card alarms and the clearing alarm that appears when each condition is resolved.

Table F-1. Card Alarms

Critical		Normal	
UAM	**Text**	**UAM**	**Text**
0077	Card temperature is critical lvl:T2	0079	Card temperature again at nominal levels
0092	MDAL not responding	0093	MDAL alarm cleared
0442	RTDB database capacity is 95% full	0447	RTDB database capacity alarm cleared

Major		Normal	
UAM	**Text**	**UAM**	**Text**
0001	Card has reset	0014	Card is present
		0096	Card has been reloaded
0008	Active MASP has become isolated	0009	MASP became active
		0010	MASP became standby
0013	Card is isolated from the system	0014	Card is present
		0096	Card has been reloaded
0053	Standby TDM failure	0054	Standby TDM failure cleared
0078	Card temperature exceeds nominal lvl:T1	0079	Card temperature again at nominal levels
0088	Clocks A and B TSCs are out of sync	0089	Clocks A and B TSCs are resynchronized
0132	Loading failed: table not found	0096	Card has been reloaded
0133	Loading failed: data read error		
0134	Loading failed: bad checksum returned		
0135	Loading failed: GPL load timeout		
0136	Loading failed: data load timeout		
0137	Loading failed: invalid GPL		
0138	Loading failed: GPL format error		
0139	Loading failed: disk read prep error		
0140	Loading failed: disk read response error		
0141	Loading failed: disk read failed		
0300	TVG Grant Failure	0301	TVG Grant Recovery
0306	SNM Overload Onset	0307	SNM Overload Abated
0043	Incorrect feature configuration	0423	Card reload attempted
0099	Incompatible HW for provisioned slot		

(Continued)

Major		Normal	
UAM	**Text**	**UAM**	**Text**
0276	Insufficient HW for IP7 provisioning		
0297	Incorrect port configuration		
0422	Insufficient extended memory		
0441	Incorrect MDB – CPU		
0446	RTDB database capacity is 80% full	0447	RTDB database capacity alarm cleared
0449	RTDB resynchronization in progress	0450	RTDB resynchronization complete
0443	RTDB database is corrupted	0445	RTDB database has been corrected
0451	RTDB reload is required		
0493	RTDB database is 100% full		
0514	Standby MASP is inhibited	0515	Standby MASP is allowed
0901	Card DB load timeout, check GLS card	0902	Card DB is stable
0903	IP Link A is down	0904	IP Link A is up
0905	IP Link B is down	0906	IP Link B is up
0908	HW cannot support purchased TPS rate	0907	HW limiting TPS rate alarm cleared
0051	TSC Sync is in simplex mode	0052	TSC sync feature is available
0466	STC Network Unavailable	0467	STC Network Available
0088	Clocks A and B TSCs are out of sync	0089	Clocks A and B TSCs are resynchronized
0390	Illegal Address Error	0388	Illegal Address Error Cleared
0391	Card not responding Error	0389	Card responding normally

Minor		Normal	
UAM	**Text**	**UAM**	**Text**
0022	Clock B for card failed, Clock A normal	0025	Clock B for card normal
0023	Clocks A and B for card failed	0026	Clocks A and B for card normal
0034	Card database is inconsistent	0033	Card database has been corrected
0035	Card database is corrupted		
0037	Card backup database is inconsistent	0036	Card backup database has been corrected
0038	Card backup database is corrupted		
0044	Real time clock battery low	0045	Real time clock battery restored
0055	Persistent device state tbl corrupt	0057	Persistent device state tbl corrected
0056	Persistent device state tbl diff ver		
0102	Motherboard BIP invalid	0103	Motherboard BIP valid

(Continued)

Minor		Normal	
0145	HS Clock A for card failed, B normal	0148	High Speed Clock A for card normal
0146	HS Clock B for card failed, A normal	0149	High Speed Clock B for card normal
0147	High Speed Clocks A and B for card failed	0159	High Speed Clocks A and B for card normal
0298	Card not using config. SCTP csum method	0299	Config. SCTP csum method alarm cleared
0304	REPT-NMTSK-DSCD: SNM Discard Onset	0305	RECVY-NMTSK-DSCD: SNM Discard Abated
0427	LNP database is corrupted	0431	LNP database has been corrected
0429	LNP database is inconsistent		
0428	Backup LNP database is corrupted	0432	Backup LNP database has been corrected
0430	Backup LNP database is inconsistent		
0444	RTDB database is inconsistent	0445	RTDB database has been corrected
0448	RTDB database incoherent		
0480	Timestamp Invalid	0481	Timestamp Valid
0498	Sanity monitoring is disabled	0499	Sanity monitoring is enabled
		0130	Card successfully loaded with data
		0400	Alarm cleared by deleting card
		0294	REPT-ALMINH: alarm output PERM inhibit
		0295	REPT-ALMINH: alarm output enabled
		0296	REPT-ALMINH: alarm output TEMP inhibit

CDT (Customer Defined Trouble) Alarms

Table F-2 shows the critical, major, minor, and normal card alarms and the clearing alarm that appears when each condition is resolved.

Table F-2. CDT (Customer Defined Trouble) Alarms

Critical		Normal	
UAM	**Text**	**UAM**	**Text**
0058	Critical customer trouble detected	0062	Customer trouble cleared
Major		**Normal**	
0059	Major customer trouble detected	0062	Customer trouble cleared
Minor		**Normal**	
0060	Minor customer trouble detected	0062	Customer trouble cleared
Normal		**Normal**	
0061	Customer trouble detected	0062	Customer trouble cleared

Clock (Holdover Clock) Alarms

Table F-3 shows the critical, major, and minor Holdover Clock alarms and the clearing alarm that appears when each condition is resolved.

Table F-3. Clock (Holdover) Alarms

Critical		Normal	
UAM	**Text**	**UAM**	**Text**
0063	Critical holdover clock trbl detected	0066	Holdover clock trouble cleared
Major		**Normal**	
0064	Major holdover clock trouble detected	0066	Holdover clock trouble cleared

Minor		Normal	
UAM	**Text**	**UAM**	**Text**
0065	Minor holdover clock trouble detected	0066	Holdover clock trouble cleared

Clock System Alarms

Table F-4 shows the critical, major, and minor clock alarms and the clearing alarm that appears when each condition is resolved.

Table F-4. Clock System Alarms

Critical		Normal	
UAM	**Text**	**UAM**	**Text**
0128	All clocks have failed	0113	Clock alarm(s) cleared

Major		Normal	
UAM	**Text**	**UAM**	**Text**
0162	1116-P, 1116-S clocks failed	0113	Clock alarms cleared
0164	1114-S, 1116-S clocks failed		
0166	1114-S, 1116-P, 1116-S clocks failed		
0169	1114-P, 1116-P clocks failed		
0170	1114-P, 1116-P, 1116-S clocks failed		
0171	1114-P, 1114-S clocks failed		
0172	1114-P, 1114-S, 1116-S clocks failed		
0173	1114-P, 1114-S, 1116-P clocks failed		

Minor		Normal	
UAM	**Text**	**UAM**	**Text**
0160	1116-S clock failed	0113	Clock alarms cleared
0161	1116-P clock failed		
0163	1114-S clock failed		
0165	1114-S, 1116-P clocks failed		
0167	1114-P clock failed		
0168	1114-P, 1116-S clocks failed		

DCM Alarms

Table F-5 shows the major DCM alarm and the clearing alarm that appears when the condition is resolved.

Table F-5. DCM Alarms

Major		Normal	
UAM	**Text**	**UAM**	**Text**
0084	IP Connection Unavailable	0085	IP Connection Available

DLK Alarms

Table F-6 shows the minor DLK alarm and the clearing alarm that appears when the condition is resolved.

Table F-6. DLK Alarms

Minor		Normal	
UAM	**Text**	**UAM**	**Text**
0155	STPLAN connection unavailable	0156	STPLAN connection available

DPC Alarms

Table F-7 shows the critical, minor, and normal DPC alarms and the clearing alarm that appears when each condition is resolved.

Table F-7. DPC Alarms

Critical		Other Alarm Conditions Which Clear Given Alarm		Normal	
UAM	**Text**	**UAM**	**Text**	**UAM**	**Text**
0313	DPC is prohibited	0312	DPC is restricted	0311	DPC is allowed
		0319	REPT-MTPLP-DET: Circ rte det(cong)	0402	Alarm cleared by deleting route
		0334	DPC subsystem is Abnormal		

Minor		Other Alarm Conditions Which Clear Given Alarm		Normal	
UAM	**Text**	**UAM**	**Text**	**UAM**	**Text**
0312	DPC is restricted	0313	DPC is prohibited	0311	DPC is allowed
		0319	REPT-MTPLP-DET: Circ rte det(cong)	0402	Alarm cleared by deleting route
		0334	DPC subsystem is Abnormal		

Normal		Other Alarm Conditions Which Clear Given Alarm		Normal	
0315	Route is restricted	0316	Route is prohibited	0314	Route is allowed
		0319	REPT-MTPLP-DET: Circ rte det(cong)	0402	Alarm cleared by deleting route
0316	Route is prohibited	0315	Route is restricted	0314	Route is allowed
		0319	REPT-MTPLP-DET: Circ rte det(cong)	0402	Alarm cleared by deleting route

DPC System Alarms

Table F-8 shows the critical and normal DPC System alarms and the clearing alarm that appears when each condition is resolved.

Table F-8. DPC System Alarms

Critical		Other Alarm Conditions Which Clear Given Alarm		Normal	
UAM	**Text**	**UAM**	**Text**	**UAM**	**Text**
0325	DPC subsystem is blocked	0312	DPC is restricted	0324	DPC subsystem is allowed
		0319	REPT-MTPLP-DET: Circ rte det(cong)	0327	DPC subsystem has been deleted
		0326	DPC subsystem is prohibited	0333	DPC subsystem is Normal
		0332	DPC subsystem is prohibited and blocked		
		0334	DPC subsystem is Abnormal		
0326	DPC subsystem is prohibited	0312	DPC is restricted	0324	DPC subsystem is allowed
		0319	REPT-MTPLP-DET: Circ rte det(cong)	0327	DPC subsystem has been deleted
		0325	DPC subsystem is blocked	0333	DPC subsystem is Normal
		0332	DPC subsystem is prohibited and blocked		
		0334	DPC subsystem is Abnormal		
0332	DPC subsystem is prohibited and blocked	0312	DPC is restricted	0324	DPC subsystem is allowed
		0319	REPT-MTPLP-DET: Circ rte det(cong)	0327	DPC subsystem has been deleted
		0325	DPC subsystem is blocked	0333	DPC subsystem is Normal
		0326	DPC subsystem is prohibited		
		0334	DPC subsystem is Abnormal		
0334	DPC subsystem is Abnormal	0319	REPT-MTPLP-DET: Circ rte det(cong)	0324	DPC subsystem is allowed
				0327	DPC subsystem has been deleted
				0333	DPC subsystem is Normal
0319	REPT-MTPLP-DET: Circ rte det(cong)			0340	RCVRY-MTPLP-RST: Circ rte status cleared
0320	REPT-MTPLP-SUST: Sustained circ rt (cong)			0340	RCVRY-MTPLP-RST: Circ rte status cleared

Table F-8. DPC System Alarms (Continued)

Critical		Other Alarm Conditions Which Clear Given Alarm		Normal	
UAM	**Text**	**UAM**	**Text**	**UAM**	**Text**
				0337	DPC-SS status changed[a]

a. When DPC subsystem transitions between prohibited and block to either blocked or prohibited only, this UAM is raised.

DSM Alarms

Table F-9 shows the major DSM alarm and the clearing alarm that appears when the condition is resolved.

Table F-9. DSM Alarms

Major		Normal	
UAM	**Text**	**UAM**	**Text**
0084	IP Connection Unavailable	0085	IP Connection Available

E1 Port Alarms

Table F-10 shows the major E1 alarms and the clearing alarm that appears when each condition is resolved.

Table F-10. E1 Port Alarms

Major		Normal	
UAM	**Text**	**UAM**	**Text**
0381	REPT-E1F:FAC-E1 LOS failure	0386	RCVRY-E1F:FAC-E1 available
0382	REPT-E1F:FAC-E1 LOF failure		
0383	REPT-E1F:FAC-E1 AIS detected		
0384	REPT-E1F:FAC-E1 Far End failure		
0385	REPT-E1F:FAC-E1 10E-3 BER failed		
0387	REPT-E1F:FAC-E1 unavailable		

EIR Alarms

Table F-11 shows the critical and minor EIR alarms and the clearing alarm that appears when each condition is resolved.

Table F-11. EIR Alarms

Critical		Normal	
UAM	**Text**	**UAM**	**Text**
0455	EIR System is not available	0458	EIR Subsystem is available
		0459	EIR Subsystem is removed
0456	EIR Subsystem is disabled	0458	EIR Subsystem is available
		0459	EIR Subsystem is removed
Minor		**Normal**	
0457	EIR Subsystem normal,card(s) abnormal	0458	EIR Subsystem is available
		0459	EIR Subsystem is removed

EMAP Alarms

Table F-12 shows the major and minor EAMP alarms and the clearing alarm that appears when each condition is resolved.

Table F-12. EMAP Alarms

Major		Normal	
UAM	**Text**	**UAM**	**Text**
0084	IP Connection Unavailable	0085	IP Connection Available

EMAP (NDC) Alarms

Table F-13 shows the major and minor EAMP (NDC) alarms and the clearing alarm that appears when each condition is resolved.

Table F-13. EMAP (NDC) Alarms

Major		Normal	
UAM	**Text**	**UAM**	**Text**
0084	IP Connection Unavailable	0085	IP Connection Available
Minor		**Normal**	
0179	NDC Q.3 Association is unavailable	0180	NDC Q.3 Association is available

EROUTE Alarms

Table F-14 shows the critical, major, and minor EROUTE alarms and the clearing alarm that appears when each condition is resolved.

Table F-14. EROUTE Alarms

Critical		Normal	
UAM	**Text**	**UAM**	**Text**
0468	All STC Networks Unavailable	0470	EROUTE is Removed
0469	All STC Cards Unavailable	0471	EROUTE System is Available
		0474	EROUTE capacity normal, card(s) abnormal
Major		**Normal**	
0473	EROUTE System Capacity Exceeded	0470	EROUTE is Removed
0482	Card(s) have been denied EROUTE service	0471	EROUTE System is Available
		0474	EROUTE capacity normal, card(s) abnormal
Minor		**Normal**	
0472	EROUTE System Threshold Exceeded	0470	EROUTE is Removed
		0471	EROUTE System is Available
		0474	EROUTE capacity normal, card(s) abnormal
0475	NTP Time Unavailable	0476	NTP Time Available

Frame Alarms

Table F-15 shows the major Frame alarms and the clearing alarms that appear when the condition is resolved.

Table F-15. Frame Alarms

Critical		Normal	
UAM	**Text**	**UAM**	**Text**
0520	Frame power usage reached LVL3	0523	Frame power usage normal
Major		**Normal**	
UAM	**Text**	**UAM**	**Text**
0521	Frame power usage reached LVL2	0523	Frame power usage normal
Minor		**Normal**	
UAM	**Text**	**UAM**	**Text**
0522	Frame power usage reached LVL1	0523	Frame power usage normal

Fuse Alarms

Table F-16 shows the major fuse alarm and the clearing alarm that appears when the condition is resolved.

Table F-16. Fuse Alarms

Major		Normal	
UAM	**Text**	**UAM**	**Text**
0082	Alarm in fuse panel	0083	Fuse panel alarm has cleared

GLS Alarms

Table F-17 shows the critical and major GLS alarms and the clearing alarm that appears when each condition is resolved.

Table F-17. GLS Alarms

Critical		Normal	
UAM	**Text**	**UAM**	**Text**
0292	GLS is not available	0290	GLS is available
		0293	GLS have been removed from the system
Major		**Normal**	
0291	GLS is at minimum service limit	0290	GLS is available
		0293	GLS have been removed from the system

GPL Alarms

Table F-18 shows the minor GPL alarms and the clearing alarm that appears when each condition is resolved.

Table F-18. GPL Alarms

Critical		Normal	
UAM	**Text**	**UAM**	**Text**
0002	Card is not running approved GPL	0003	Alarm cleared for GPL
0004	Card is running non-activated GPL	0005	Alarm cleared running non-activated GPL
0040	GPL is corrupted	0039	GPL has been corrected

HS Clock System Alarms

Table F-19 shows the critical, major, and minor HS Clock System alarms and the clearing alarm that appears when each condition is resolved.

Table F-19. HS Clock System Alarms

Critical		Normal	
UAM	**Text**	**UAM**	**Text**
0197	All high speed clocks have failed	0198	High Speed clock alarm(s) cleared

Major		Normal	
UAM	**Text**	**UAM**	**Text**
0185	1116-PHS, 1116-SHS clocks failed	0198	High Speed clock alarm(s) cleared
0187	1114-SHS, 1116-SHS clocks failed		
0189	1114-SHS, 1116-PHS,1116-SHS clks failed		
0192	1114-PHS, 1116-PHS clocks failed		
0193	1114-PHS, 1116-PHS,1116-SHS clks failed		
0194	1114-PHS, 1114-SHS clocks failed		
0195	1114-PHS, 1114-SHS, 1116-SHS clks failed		
0196	1114-PHS, 1114-SHS, 1116-PHS clks failed		
403	1114 E1/T1 clock requires TDM-GTI	409	Clock configuration corrected
404	1116 E1/T1 clock requires TDM-GTI		
405	1114, 116 E1/T1 clock requires TDM-GTI		
406	1114 Clock selection mismatch		
407	1116 Clock selection mismatch		
408	1114, 1116 Clock selection mismatch		

Minor		Normal	
UAM	**Text**	**UAM**	**Text**
0183	1116-SHS clock failed	0198	High speed clock alarm(s) cleared
0184	1116-PHS clock failed		
0186	1114-SHS clock failed		
0188	1114-SHS, 1116-PHS clocks failed		
0190	1114-PHS clock failed		
0191	1114-PHS, 1116-SHS clocks failed		

IMT Bus Alarms

Table F-20 shows the major, minor, and normal IMT Bus alarms and the clearing alarm that appears when each condition is resolved.

Table F-20. IMT Bus Alarms

Major		Normal	
UAM	**Text**	**UAM**	**Text**
0108	Major IMT failure detected	0106	IMT bus alarm cleared
Minor		**Normal**	
0107	Minor IMT failure detected	0106	IMT bus alarm cleared
Normal		**Normal**	
0098	IMT inhibited	0097	IMT allowed

IMT System Alarms

Table F-21 shows the critical, major, and minor IMT System alarms and the clearing alarm that appears when each condition is resolved.

Table F-21. IMT System Alarms

Critical		Normal	
UAM	**Text**	**UAM**	**Text**
0112	Major failures detected on both IMTs	0109	All IMT system level alarms cleared
Major		**Normal**	
0111	Failure on both IMT A and IMT B	0109	All IMT system level alarms cleared
Minor		**Normal**	
0110	Failure detected on one IMT bus	0109	All IMT system level alarms cleared

INP System Alarms

Table F-22 shows the critical and minor NP System alarms and the clearing alarm that appears when each condition is resolved.

Table F-22. INP System Alarms

Critical		Normal	
UAM	**Text**	**UAM**	**Text**
0395	Local Subsystem is not available	0394	Local Subsystem is available
0396	Local Subsystem is disabled	0397	Local Subsystem is removed
Minor		**Normal**	
0398	Local Subsystem normal,card(s) abnormal	0394 0397	Local Subsystem is available Local Subsystem is removed

IP^7 Alarms

Table F-23 shows the major and minor IP Connection alarms and the clearing alarm that appears when each condition is resolved.

Table F-23. IP Connection Alarms

Major		Normal	
UAM	**Text**	**UAM**	**Text**
0277	AS Unavailable	0278	AS Available
0084	IP Connection Unavailable	0085	IP Connection Available
		0087	IP Connection manually removed
Minor		**Normal**	
0279	AS Restricted	0280	AS Unrestricted
0086	IP Connection Congested	0085	IP Connection Available
		0087	IP Connection manually removed
0466	STC Network Unavailable	0467	STC Network Available

IP TPS System Alarms

Table F-24 shows the major IP TPS System alarm and the clearing alarm that appears when the condition is resolved.

Table F-24. IP TPS System Alarms

Major		Normal	
UAM	**Text**	**UAM**	**Text**
0114	System IP TPS threshold exceeded	0117	System IP TPS threshold normal

IP^7 System Alarms

Table F-25 shows the major IP^7 System alarm and the clearing alarm that appears when the condition is resolved.

Table F-25. IP^7 System Alarms

Major		Normal	
UAM	**Text**	**UAM**	**Text**
0535	IP Connection Restricted	0085	IP Connection Available

Linkset Alarms

Table F-26 shows the major Linkset alarm and the clearing alarms that appears when the condition is resolved.

Table F-26. Linkset Alarms

Major		Normal	
UAM	**Text**	**UAM**	**Text**
0115	Linkset IP TPS threshold exceeded	0118	Linkset IP TPS threshold normal
0318	REPT-LKSTO: link set prohibited	0317	RCVRY-LKSTO: link set allowed
		0399	RRCVRY-LKSTO:Alarm clr'd by deleting SLK

LNP System Alarms

Table F-27 shows the critical and majorLNP System alarms and the clearing alarm that appears when each condition is resolved.

Table F-27. LNP System Alarms

Critical		Normal	
UAM	**Text**	**UAM**	**Text**
0424	LNP Subsystem is not available	0426	LNP Subsystem is available
		0425	LNP Subsystem normal, card(s) abnormal
0435	LNP Subsystem is disabled	0434	LNP Subsystem is removed
		0425	LNP Subsystem normal, card(s) abnormal
0287	RTDB Table Level 2 FAK Cap exceeded	0289	RTDB Table FAK Capacity Normal
Major		**Normal**	
0283	LNP Ported NPAs approaching Feat. Capacity	0284	LNP Ported NPAs Capacity Normal
0285	LNP Ported LRNs approaching Feat. Capacity	0286	LNP Ported LRNs Capacity Normal
0288	RTDB Table Level 1 FAK Cap exceeded	0289	RTDB Table FAK Capacity Normal
0436	LNP ACG node overload	0426	LNP Subsystem is available

LSMS Connection Alarms

Table F-28 shows the critical and major LSMS Connection alarms and the clearing alarm that appears when each condition is resolved.

Table F-28. LSMS Connection Alarms

Critical		Normal	
UAM	**Text**	**UAM**	**Text**
0041	LNP DB Maintenance required.	0042	LSMS bulk load complete.
Major		**Normal**	
0358	LSMS connection unavailable	0359	LSMS connection available

LSMS System Alarms

Table F-29 shows the critical and major LSMS System alarms and the clearing alarm that appears when each condition is resolved.

Table F-29. LSMS System Alarms

Critical		Normal	
UAM	**Text**	**UAM**	**Text**
0356	LSMS unavailable	0355	LSMS is available
		0357	All OAP terminals are removed
0350	OAP terminals inhibited	0355	LSMS is available
		0357	All OAP terminals are removed
Major		**Normal**	
0341	OAP unavailable	0353	OAP is available
0354	One OAP terminal unavailable	0357	All OAP terminals are removed
0362	LSMS is at min service limit	0355	LSMS is available
		0357	All OAP terminals are removed

MCPM Alarms

Table F-30 shows the major MCPM alarm and the clearing alarm that appears when the condition is resolved.

Table F-30. MCPM Alarms

Major		Normal	
UAM	**Text**	**UAM**	**Text**
0084	IP Connection Unavailable	0085	IP Connection Available

MEAS System Alarms

Table F-31 shows the critical, major, and minor MEAS System alarms and the clearing alarm that appears when each condition is resolved.

Table F-31. MEAS System Alarms

Critical		Normal	
UAM	**Text**	**UAM**	**Text**
0518	Measurements subsystem unavailable	0519	Measurements subsystem available
Major		**Normal**	
0517	Degraded Mo– – multiple cards failed	0519	Measurements subsystem available
Minor		**Normal**	
0516	Degraded Mo– – 1 card failed	0519	Measurements subsystem available

MPS (ELAP/EPAP) Alarms

Table F-32 shows the critical, major, and minor MPS (ELAP/EPAP) alarms and the clearing alarm that appears when each condition is resolved.

Table F-32. MPS (ELAP/EPAP) Alarms

Critical		Normal	
UAM	**Text**	**UAM**	**Text**
0370	Critical Platform Failure(s)	0250	MPS available
0371	Critical Application Failure(s)		
0261	MPS unavailable		
Major		**Normal**	
0372	Major Platform Failure(s)	0250	MPS available
0373	Major Application Failure(s)		
Minor		**Normal**	
0374	Minor Platform Failure(s)	0250	MPS available
0375	Minor Application Failure(s)		

NOTE: Critical Platform/Application alarms cause the MPS to go OOS-MT and Major/Minor Platform/Applications alarms cause the MPS to go IS-ANR.

MPS Alarm Support

The MPS running software Release 2.0 (ELAP) or higher, Release 27.0 will support MPS alarms (370-375), as well as UAMs 442-451 against a card.

Table F-33. MPS Alarm Support

	Release 27.0 and higher
UAM #	**Format**
0442 0446 0447	CARD
0443-0445 0448-0451	CARD
0370-0375	MPS1
0250	MPS2

NDC System Alarms

Table F-34 shows the major NDC System alarms and the clearing alarm that appears when the condition is resolved.

Table F-34. NDC System Alarms

Major		Normal	
UAM	**Text**	**UAM**	**Text**
0181	NDC system is Unavailable	0182	NDC system is Available

RTX System Alarms

Table F-35 shows the major RTX system alarms and the clearing alarm that appears when the condition is resolved.

Table F-35. RTX System Alarms

Critical			Other alarm conditions which clear given alarm	Normal	
UAM	**Text**			**UAM**	**Text**
0534	RTX is prohibited	0533	RTX is restricted	0532	RTX is allowed
		0319	REPT-MTPLP-DET: Circ rte det(cong)	0402	Alarm cleared by deleting route
Minor			**Other alarm conditions which clear given alarm**	**Normal**	
UAM	**Text**			**UAM**	**Text**
0533	RTX is restricted	0534	RTX is prohibited	0532	RTX is allowed
		0319	REPT-MTPLP-DET: Circ rte det(cong)	0402	Alarm cleared by deleting route

SCCP System Alarms

Table F-36 shows the critical, major, and minor SCCP system alarms and the clearing alarm that appears when each condition is resolved.

Table F-36. SCCP System Alarms

Critical		Normal	
UAM	**Text**	**UAM**	**Text**
0331	SCCP is not available	0328	SCCP is available
		0335	SCCP is removed
0437	System SCCP TPS Capacity Exceeded	0329	SCCP capacity normal, card(s) abnormal
0453	Exceeded Service Error Threshold Lvl 2	0454	Service Error Threshold Alarm Cleared
Major		**Normal**	
0336	LIM(s) have been denied SCCP service	0328	SCCP is available
		0335	SCCP is removed
0452	Exceeded Service Error Threshold Lvl 1	0454	Service Error Threshold Alarm Cleared
Minor		**Normal**	
0330	System SCCP TPS Threshold exceeded	0329	SCCP capacity normal, card(s) abnormal
		0335	SCCP is removed

SCCP Service Alarms

Table F-37 shows the critical, major, and minor SCCP service alarms and the clearing alarm that appears when each condition is resolved.

Table F-37. SCCP Service Alarms

Critical		Normal	
UAM	**Text**	**UAM**	**Text**
0528	Service is not available	0526	Service is available
		0530	Service is removed
0529	Service is disabled	0526	Service is available
		0530	Service is removed
Minor		**Normal**	
0527	Service abnormal	0526	Service is available
		0530	Service is removed

SEAS OAP Alarms

Table F-38 shows the major and minor SEAS OAP alarms and the clearing alarm that appears when each condition is resolved.

Table F-38. SEAS OAP Alarms

Major		Normal	
UAM	**Text**	**UAM**	**Text**
0341	OAP unavailable	0353	OAP is available
0342	SEAS UAL unavailable		
0354	One OAP terminal unavailable		
0360	EMS Agent unavailable	0361	EMS Agent available

Minor		Normal	
UAM	**Text**	**UAM**	**Text**
0364	Configuration data checksum mismatch	0365	Configuration data checksum alarm cleared
0363	OAP filesystem full	0361	EMS Agent available

SEAS System Alarms

Table F-39 shows the critical and major SEAS System alarms and the clearing alarm that appears when each condition is resolved.

Table F-39. SEAS System Alarms

Critical		Normal	
UAM	**Text**	**UAM**	**Text**
0349	SEAS unavailable	0351	SEAS is available
0350	OAP terminals inhibited	0352	SEAS is removed
Major		**Normal**	
0348	SEAS is at min service limit	0351	SEAS is available
		0352	SEAS is removed

SEAS X25 Alarms

Table F-40 shows the major and minor SEAS X25 alarms and the clearing alarm that appears when each condition is resolved.

Table F-40. SEAS X25 Alarms

Major		Normal	
UAM	**Text**	**UAM**	**Text**
0343	SEAS X.25 Link unavailable	0347	SEAS X.25 Link is available
0345	All SEAS UAL sessions unavailable		
Minor		**Normal**	
0344	SEAS PVC unavailable	0347	SEAS X.25 Link is available
0346	SEAS UAL session unavailable		

Security Log Alarm

Table F-41 shows the minor and normal Security Log alarms and the clearing alarm that appears when each condition is resolved.

Table F-41. Security Log Alarms

Minor		Normal	
UAM	**Text**	**UAM**	**Text**
0174	%full threshold reached-upload required	0177	Security log exception cleared
0175	LOGGUFROVFL-SECUL–G - upload required		
0176	Stby security log – upload required		
Normal		**Normal**	
0178	Security log failed	0177	Security log exception cleared

Security System Alarms

Table F-42 shows the major Security System alarm and the clearing alarm that appears when the condition is resolved.

Table F-42. Security System Alarms

Major		Normal	
UAM	**Text**	**UAM**	**Text**
0392	OA&M IP Security feature status is OFF	0393	OA&M IP Security feature status is ON
		0199	OA&M IP Security feature disabled

SLK Alarms

Table F-43 shows the major, minor, and normal SLK alarms and the clearing alarm that appears when each condition is resolved.

Table F-43. SLK Alarms

Major		Normal	
UAM	**Text**	**UAM**	**Text**
0201	REPT-LFK: remote NE loopback	0223	REPT-LKF: remote NE loopback cleared
		0401	Alarm cleared by deleting SLK
0202	REPT-LFK: H–P -too many interrupts	0200	RCVRY-LFK: link available
0203	REPT-LFK: lost data	0401	Alarm cleared by deleting SLK
0204	REPT-LFK: X–R -SUERM threshold exceeded		
0205	REPT-LFK: A–F - lvl-2 T1 expd (ready)		
0206	REPT-LFK: A–F -lvl-2 T1 expd(not ready)		
0207	REPT-LFK: A–F - lvl-2 T3 expired		
0208	REPT-LFK: A–F - lvl-2 T2 expired		
0209	REPT-LFK: A–F - failed proving period		
0210	REPT-LFK: O–A - received SIO		
0211	REPT-LFK: O–A - received SIN		
0212	REPT-LFK: O–A - received SIE		
0213	REPT-LFK: O–A - received SIOS	0200	RCVRY-LFK: link available
0214	REPT-LFK: A–N - rcvd 2 of 3 invalid BSN	0401	Alarm cleared by deleting SLK
0215	REPT-LFK: A–N - rcvd 2 of 3 invalid FIB		
0216	REPT-LFK: remote congestion timeout		
0217	REPT-LFK: XDA - excess acknowledge delay		
0218	REPT-LFK: C–O - rcvd changeover order		

Table F-43. SLK Alarms (Continued)

Major		Normal	
UAM	**Text**	**UAM**	**Text**
0219	REPT-LFK: false congestion restart		
0220	REPT-LFK: MTP link restart delayed		
0221	REPT-LFK: X25 link unavailable		
0222	REPT-LFK: remote FE loopback		
0224	REPT-LFK: link test failed		
0230	REPT-LKF: local blocked - thermal		
0232	REPT-LFK: remote blocked		
0233	REPT-LINK-MANUAV: local blocked		
0234	REPT-LFK: RMI remote inhibited		
0235	REPT-LINK-MGTINH: local inhibited		
0236	REPT-LFK: not aligned		
0237	REPT-LKF: LM Timer NO-CREDIT expired		
0238	REPT-LKF: XDA-Timer NO-RESPONSE expired		
0239	REPT-LKF: M–L - local processor outage		
0240	REPT-LKF: rcvd SSCOP END-proc. outage		
0241	REPT-LKF: rcvd SSCOP END-out of service		
0242	REPT-LKF: rcvd SSCOP END-protocol error		
0243	REPT-LKF:rcvd SSCOP END-mgmnt initiated		
0244	REPT-LKF: F–C - DS1/E1 LOS failure		
0245	REPT-LKF: F–C - DS1/E1 LOF failure		
0246	REPT-LKF: F–C - DS1/E1 LCD failure		
0247	REPT-LKF: XER - ISERM threshold exceeded		
0158	X25 no logical channels available	0157	X25 logical channels available

Minor		Normal	
UAM	**Text**	**UAM**	**Text**
0116	Link expected IP TPS threshold exceeded	0119	Link IP TPS threshold normal
0477	Congestion: Copy Function De-activated	0478	Copy Function Activated

Minor		Normal	
UAM	**Text**	**UAM**	**Text**
		0479	Link not monitored
0531	Insufficient HW Copy Function Inhibited	0478	Copy Function Activated
		0479	Link not monitored

Normal		Normal	
UAM	**Text**	**UAM**	**Text**
0264	REPT-LINK-CGST: congestion level 0 to 1	0269	RCVRY-LINK-CGST:congestion has cleared
0265	REPT-LINK-CGST: congestion level 1 to 2	0268	RCVRY-LINK-CGST:congestion level 2 to 1
		0269	RCVRY-LINK-CGST:congestion has cleared
0266	REPT-LINK-CGST: congestion level 2 to 3	0267	RCVRY-LINK-CGST:congestion level 3 to 2
		0269	RCVRY-LINK-CGST:congestion has cleared
0270	REPT-LINK-CGST: discard level 0 to 1	0275	RVCRY-LINK-CGST: discard has cleared
0271	REPT-LINK-CGST: discard level 1 to 2	0274	RVCRY-LINK-CGST: discard level 2 to 1
		0275	RVCRY-LINK-CGST: discard has cleared
0272	REPT-LINK-CGST: discard level 2 to 3	0273	RVCRY-LINK-CGST: discard level 3 to 2
		0275	RVCRY-LINK-CGST: discard has cleared

STPLAN Alarms

Table F-44 shows the critical and major STPLAN alarms and the clearing alarm that appears when each condition is resolved.

Table F-44. STPLAN Alarms

Critical		Normal	
UAM	**Text**	**UAM**	**Text**
0153	STPLAN not available	0150	STPLAN is available
		0151	STPLAN capacity normal, card(s) abnormal
		0154	STPLAN is removed
Major		**Normal**	
0152	LIM(s) have been denied STPLAN service	0150	STPLAN is available
		0151	STPLAN capacity normal, card(s) abnormal
		0154	STPLAN is removed

System Alarms

Table F-45 shows the critical, major, and minor System alarms and the clearing alarm that appears when each condition is resolved.

Table F-45. System Alarms

Critical		Normal	
UAM	**Text**	**UAM**	**Text**
0308	Node isolated due to SLK failures	0309	Node is no longer isolated
0368	Temp Keys(s) have expired.	0366	Temp Key(s) expiration alarm cleared
0438	Degraded Mode, Invalid OAM HW config	0439	Exiting Degraded Mode
Major		**Normal**	
0367	Temp Keys(s) expiring soon.	0366	Temp Key(s) expiration alarm cleared
0011	Entering forced simplex mode	0018	Exiting forced simplex mode
0911	Dynamic database is inconsistent	0912	Dynamic database is now consistent
Minor		**Normal**	
0302	Cooling fan failure	0303	Cooling fans normal

System GPL Alarms

Table F-46 shows the minor GPL alarms and the clearing alarm that appears when each condition is resolved.

Table F-46. System GPL Alarms

Minor		Normal	
UAM	**Text**	**UAM**	**Text**
0143	System release GPL(s) not approved	0142	System release alarm cleared
0144	System release version unknown		

T1 Port Alarms

Table F-47 shows the major T1 alarms and the clearing alarm that appears when each condition is resolved.

Table F-47. T1 Port Alarms

Major		Normal	
UAM	**Text**	**UAM**	**Text**
0369	REPT-T1F:FAC-T1 unavailable	0380	RCVRY-T1F:FAC-T1 available
0376	REPT-T1F:FAC-T1 LOS failure		
0377	REPT-T1F:FAC-T1 LOF failure		
0378	REPT-T1F:FAC-T1 Remote Alarm		
0379	REPT-T1F:FAC-T1 Alarm		

Terminal Alarms

Table F-48 shows the minor Terminal alarm and the clearing alarm that appears when the condition is resolved. X-LIST Alarms

Table F-48. Terminal Alarms

Minor		Normal	
UAM	**Text**	**UAM**	**Text**
0048	Terminal failed	0046	Terminal enabled

Table F-49 shows the major and minor X-LIST alarms and the clearing alarm that appears when each condition is resolved.

Table F-49. X-LIST Alarms

Major		Normal	
UAM	**Text**	**UAM**	**Text**
0338	X-LIST space full-entry(s) discarded	0339	X-LIST space full condition abated
Minor		**Normal**	
0321	X-LIST occupancy threshold exceeded	0322	X-List occupancy below threshold

G

Part Numbers

Overview G–2
Cables, Adapters G–3
Components G–7
Frames, Backplanes, FAPs, and Fans G–10
Labels G–12
Miscellaneous Parts G–13
Power Cords for Peripherals G–15

Overview

This chapter lists the part numbers of Tekelec equipment, components, cables, and miscellaneous parts described in this manual.

Each table provides the item name, part number, and related notes. Items are listed by their name (as described in this manual) in alphabetical order. Shaded part numbers indicate that the item is obsolete or no longer shipped. Unless the item is indicated as obsolete, the item is still supported in the field.

NOTE: Tekelec reserves the right to ship compatible part numbers or revisions for new installations and replacements. Always check the latest Hardware Baseline for your release. The latest hardware baseline can be found in the Feature Notice of your release.

RoHS 5/6 - As of July 1, 2006, all products that comprise new installations shipped to European Union member countries will comply with the EU Directive 2002/95/EC "RoHS" (Restriction of Hazardous Substances). The exemption for lead-based solder described in the Annex will be exercised. RoHS 5/6 compliant components will have unique part numbers and are identified as the International part number in this chapter.

NOTE: Throughout the manual, international part numbers have replaced the North American part numbers where applicable.

WEEE - All products shipped to European Union member countries comply with the EU Directive 2002/96/EC, Waste Electronic and Electrical Equipment. All components that are WEEE compliant will be appropriately marked. For more information regarding Tekelec's WEEE program, contact your sales representative.

Cables, Adapters

Table G-1. EAGLE 5 ISS Cables, Connectors, and Power Cords

Name	Part Numbers		Note
	North America	International	
Adapter, 15 PIN to 26 PIN	830-0425-01	---	
Adapter 25 to 15 pin	000-0088-01	---	POWER SUPPLY V.35 PATCH PANEL -48 VDC
Adapter cables	830-0846-01	830-1183-01	backplanes -03 and -04 for master timing and HS clock cable 830-0873-xx
Alarm cable	830-0543-01	---	Holdover Clock
Alarm cable	830-0638-xx	830-1163	Rack alarm
Alarm NETRA Server Cable	830-0900-xx	---	
B Clock Cable	830-0404-xx	---	replaced by 830-0398-xx (NA) or 830-1150-xx (I) both are for HMUX
B Clock Cable	830-0398-xx	830-1150-xx	
A and B Frame Clock cable	---	---	see B Clock Cable
BITS clock cable	830-0226-xx	830-1146-xx	Backplanes -03 and -04
BITS clock cable	830-0873-xx	---	Backplane -06
BNC pen end cable	830-0625-xx	830-1161-xx	
BNC to BNC cable assembly	830-0624-xx	830-1160-xx	
Breaker-to-Terminal Strip Power Cable	830-0866-xx	---	
CD-ROM Cable	830-0421-xx	---	
Clock Connection cable	830-0657-xx	830-1164-xx	Fan, alarm, control EOAP to Control shelf
Composite clock cable	---	---	See BITS clock cable
Converter	804-0176-01	---	
Crossover (CAT-5) Cable	830-0723-xx	830-1173-xx	
Crossover Patch Panel Cable	830-0789-xx	830-1178-xx	DCM
DCM, 100-BASE TX Interface	830-0711-xx	---	

Table G-1. EAGLE 5 ISS Cables, Connectors, and Power Cords (Continued)

Name	Part Numbers		Note
	North America	International	
Drive Power Cable	830-0224-xx	---	
DS1 Cable	830-0849-xx	830-1184-xx	
E1 cable	830-0622-xx	830-1233-xx	
E1 patch cable	830-0605-02	830-1156-xx	
E1-T1 MIM 22 AWG	830-0932-01	830-1106-xx	
E1/T1 MIM LIM Cable	830-0948-01	830-1197-xx	4 Port 24 AWG
E1/T1 MIM LIM to MPL Adapter	830-0949-01	830-1197-01	
Ethernet cable	830-0788-xx	830-1177-xx	DCM, DSM, EDCM-A, and EDCM
External alarm cable	830-0435-xx	830-1151-xx	
Fan cable	830-0690-01	---	AC power
Fan power/alarm cable	830-0609-01	830-1157-01	incl. with fan assembly
Fifty Position Cable Hard Drive I/O	830-0656-01	---	
Filter Rack Alarm Cable	830-0638-xx	830-1163-xx	
Force Transition Card	850-0496-01	---	
Hazard Ground Cable	830-0257-xx	---	
High density connector	000-0088-01	---	POWER SUPPLY V.35 PATCH PANEL -48 VDC
High Speed (BITS) Clock Cable	830-0873-xx	830-1189-xx	
High Speed Master Timing Adapter	830-0846-01	830-1183-01	
HMUX Adapter Cable	830-0857-01	830-1185-01	
1/0 Green Ground Cable	690-0108-07	690-0108-R07	
Interface Cable	830-0366-xx	830-1149-xx	
Local Maintenance Center Cable	830-0231-xx	830-1144-xx	
Loop Back Cable Adapter	830-0763-01	830-1176-xx	
MMI Port Cable	830-0708-xx	830-1169-xx	
Modem/Terminal Cable	830-0709-xx	830-1170-xx	
Multi-port LIM Diagnostic Cable	803-0029-0	---	
Multi-port LIM DS0 cable	830-0772-xx	---	26 AWG, inacctive

Table G-1. EAGLE 5 ISS Cables, Connectors, and Power Cords (Continued)

Name	Part Numbers		Note
	North America	International	
Multi-port LIM DS0 cable	830-0892-xx	830-1194-xx	24 AWG, inacctive
Multi-Port Power Cable	830-0814-xx	---	
Network Cable	830-0710-xx	830-1257-xx	
Null Modem Cable	830-0759-xx	---	
Null-Modem for Terminal Cable	830-0859-xx	830-1186-xx	
Output panel frame ground cable	690-0009	---	
Pin Protector Assembly	830-0880-01	---	use with clock cable replacement (66 min for 6 shelves)
Power Cable	830-0315-xx	830-1147-xx	
Power Cable, –48V	830-0651-xx	---	
Power Ring	830-0908-xx	---	AXi
RAID Power Cable	830-0872-xx	---	DC
Remote Maintenance Center Cable	830-0233-xx	830-1146-xx	
RJ45/RJ45 Cable (CAT-5) (Yellow)	830-0888-xx	---	
RJ45/RJ45 Cable (CAT-5) (Blue)	830-0889-xx	830-1192-xx	
RJ45 to 9 Pin Adapter	830-0917-01	---	
Row Alarm Cable	830-0232-xx	830-1145-xx	
Router Power Cable	830-0869-xx	830-1188-xx	DC
RS232 Cable	830-0527-xx	830-1152-xx	
Serial I/O Transition Card	850-0514-01	---	
Serial Interface Converter Cable	830-0531-01	---	inactive
Serial Interface/Modem Adapter	830-0531-03	830-1153-03	use with 830-0394-xx
Serial Interface/Modem Adapter	830-0531-04	830-1153-04	use with 830-0535-xx
Serial DB44 to DB9 (X4) cable	830-0972-01	830-1231-01	36-inch T1x00 AS
Serial Interface, Terminal, Printer Adapter	830-0531-02	830-1153-02	use with 830-0394-xx
Straight Through Cable (CAT-5)	830-0724-xx	---	
Straight Through Cable (Patch Panel)	830-0788-xx	830-1177-xx	
Switch-to-Frame Ground Cable	830-0884-01	---	

Table G-1. EAGLE 5 ISS Cables, Connectors, and Power Cords (Continued)

Name	Part Numbers		Note
	North America	International	
Terminal/Converter Cable	830-0528-01	---	
Terminal/Printer Cable	830-0535-xx	830-1154-xx	
Tone and Announcement Server Alarm Cable	830-0901-xx	---	
T1 LIM-to-MPL Cable Adapter	830-0895-01	---	
T1 MIM cable	830-0894-xx	---	
Terminal cable adapter	---	---	see Terminal/Printer cable

Components

Table G-2. EAGLE 5 ISS Components

Acronym	Name	Part Numbers		Note
		North America	International	
ACM	Application Communication Module	870-1008-xx	---	
---	Air Management Card	870-1824-01	870-1824-02	single slot, eeded for empty slots when using Fan Tray 890-0001-02
ASM	Application Service Module	870-1011-xx	---	Obsolete as of EAGLE 5 ISS 31.6
---	Breaker Panel Alarm Card	804-1489-01	804-1489-R01	
CI	Clock Interface Card (Holdover Clock)	804-0165-01	---	
DCM	Database Communications Module	870-1945-038	---	K6-lll, 200 TPS STC card
DCMX	Expandable Database Communications Module	870-1984-01	---	
DSM	Database Service Module	870-1984-07 870-1984-09	870-1984-13 870-1984-15	4GB 1GB
DSM	Database Service Module	870-2371-08	870-2371-13	1GB
E1/T1 MIM	E1-T1 Multichannel Interface Module 02	870-2198-01	870-2198-02	European equivalent of the North American T1
EDCM	Enhanced Database Communications Module	870-2197-01	---	double-slot Pre-IP7 SG 4.0
EDCM	Enhanced Database Communications Module	870-2372-08 870-2372-09	870-2372-13 870-2372-14	single-slot
EDCM-A	Enhanced Database Communications Module A	870-2508-01	870-2508-02	single-slot
EILA	Enhanced Integrated Link Interface Module Applique	870-2049-xx	---	

Table G-2. EAGLE 5 ISS Components (Continued)

Acronym	Name	Part Numbers		Note
		North America	International	
EOAP	Embedded Operations Support System Applications Processor	890-1050-01 890-1050-03	---	singke dual
GPSM-II	General Purpose Service Module	870-2360-06	870-2360-07	Replaces MCAP as of 30.0
HCMIM	High Capacity Multi-channel Interface Module	870-2671-01	870-2574-02	Replaces IPMX
HIPR	High-Speed IMT Packet Router Module	870-2574-01	870-2574-02	Replaces IPMX
HMUX	High-Speed Multiplexer	870-1965-01	870-1965-03	Replaces IPMX
IPMX	Interprocessor Message Transport Power and Multiplexer	870-1171-01	---	replaced by HMUX
ILE1	Integrated Link Interface Module E1	870-2423-01	---	
ILA	Integrated Link Interface Module Applique	870-1484-xx	---	Use EILA
LIM	Link Interface Module	870-1014-xx	---	
LIM-AINF	Link Interface Module - Application Interface	870-1488-xx	---	Replaced by ILA and EILA
LIM-ATM	Link Interface Module - Asynchronous Transfer Module	870-1293-10	870-1293-13	
LIM-DS0A	Link Interface Module	870-1009-xx 870-1014-xx	---	Replaced by ILA and EILA
LIM- E1	Link Interface Module - E1	870-1379-01	870-1379-02	European equivalent of the North American T1
LIM-OCU	Link Interface Module - Office Channel Units	870-1010-xx 870-1486-xx	---	Replaced by ILA and EILA
LIM-V.35	Link Interface Module - Trunk Interface	870-1012-xx 870-1487-xx	---	Replaced by ILA and EILA
MCA	Matrix Controller Automatic (Holdover Clock)	000-0028-xx	---	

Table G-2. EAGLE 5 ISS Components (Continued)

Acronym	Name	Part Numbers		Note
		North America	International	
MCAP	Maintenance Administration Subsystem (MAS) Communications Applications Processor	870-1013-xx 870-1307-xx	---	Replaced by GPSM-II as of 30.0
MDAL	Maintenance Disk and Alarm Card	870-0773-08	870-0773-09	
MIS	Maintenance Interface System Card (Holdover Clock)	804-0175-xx	---	
MPL	Multi-Port Link Interface Module	870-2061-xx	870-2061-05 870-2061-05	
MPLT	Multi-Port Link Interface Module with Taxi Component	870-2062-02	---	
MPS	Multi-purpose Server	890-1287-xx 890-1374-xx	--- ---	OEM Open System
TDM-GTI	Terminal Disk Module - Global Timing Interface	870-0774-15	870-0774-18	As of 31.6 (NA) 35.0 (I)
TOCA	Timing Output Composite Automatic (Holdover Clock)	804-0166-xx	---	
TSM	Translation Service Module	870-1289-04 870-1291-xx 870-1292-xx	870-1289-06 --- ---	TSM-1G TSM-3G TSM-4G

Frames, Backplanes, FAPs, and Fans

Table G-3. Frames, Backplanes, FAPs, and Fans

Acronym	Name	Part Numbers		Note
		North America	International	
BP	Breaker Panel	804-1423-01	804-1423-R01	
BP	Breaker Panel	870-1814-01	---	
	Control Shelf Backplane -02	850-0330-02	---	inactive
	Control Shelf Backplane -03	850-0330-03	---	inactive
	Control Shelf Backplane -04	850-0330-04	---	
	Control Shelf Backplane -05	850-0330-05	---	
	Control Shelf Backplane -06	850-0330-06	850-0330-07	shelves 6 and 7 no longer supported
	E1 Backplane	850-0459-01	850-0459-02	
	Extension Shelf Backplane	850-0356-01	---	inactive
	Extension Shelf Backplane	850-0356-02	---	inactive
	Extension Shelf Backplane	850-0356-03	---	inactive
	Extension Shelf Backplane	850-0356-04	---	
	Extension Shelf Backplane	850-0356-05	850-0356-06	not used
EOAP	Embedded Operations Support System Applications Processor	890-1050-01 890-1050-03	---	singke dual
	Fan Assembly	890-0001-02	890-0001-04	All systems with HCMIMs EAGLE 33.0
	Fan Assembly	890-1038-01	890-1038-03 890-1038-04	Standard frame Heavy Duty frame
	Filter, fan tray	551-0032-01	---	
	Fan filter	551-0022-01	---	

Table G-3. Frames, Backplanes, FAPs, and Fans (Continued)

Acronym	Name	Part Numbers		Note
		North America	International	
FAP	Fuse and Alarm Panel	860-0434-01	860-0434-03 860-0434-04	Heavy Duty Frame
FAP	Fuse and Alarm Panel	870-1606-02 Rev C	---	Standard Frame 60 Amp feeds
FAP	Fuse and Alarm Panel	870-1606-02 Rev B	---	Standard 40 Amp feeds
FAP	Fuse and Alarm Panel	870-2320-028 Rev J	870-2320-04	Heavy Duty Frame 60 Amp feeds
FAP	Fuse and Alarm Panel	870-2320-01 Rev A - I	870-2320-03	Heavy Duty Frame 40 Amp feeds
FAP	Fuse and Alarm Panel	870-0243-08 Rev C	---	Control/ Extension Frame
FAP	Fuse and Alarm Panel	870-0243-09 Rev C	---	Misc Frame
	FAP Jumper Board	870-1641-01	---	
	FAP Jumper Board	870-1641-02	---	
	Heavy Duty Frame	860-0434-01	---	
	MPS Server	870-2640-01	870-2640-03	T1000 AS

Labels

Table G-4. Labels

Name	Part Numbers
Lable, Control frame	658-0486-01
Lable, Extension frame 00	658-0486-02
Lable, Extension frame 01	658-0486-03
Lable, Extension frame 02	658-0486-04
Lable, Extension frame 03	658-0486-05
Lable, Extension frame 04	658-0486-06
Lable, Miscellaneous frame 00	658-0374-01
Lable, Miscellaneous frame 01	658-0374-02
Lable, OAP frame	658-0486-08
Lable, Heavy Duty Frame	658-0374-01
Lable, CF-00, Shelf 1	658-0490-01
Lable, CF-00, Shelf 2	658-0490-02
Lable, CF-00, Shelf 3	658-0490-03
Lable, EF-00, Shelf 1	658-0490-04
Lable, EF-00, Shelf 2	658-0490-05
Lable, EF-00, Shelf 3	658-0490-06
Lable, EF-01, Shelf 1	658-0490-07
Lable, EF-01, Shelf 2	658-0490-08
Lable, EF-01, Shelf 3	658-0490-09
Lable, EF-02, Shelf 1	658-0490-10
Lable, EF-02, Shelf 2	658-0490-11
Lable, EF-02, Shelf 3	658-0490-12
Lable, EF-03, Shelf 1	658-0490-13
Lable, EF-03, Shelf 2	658-0490-14
Lable, EF-03, Shelf 3	658-0490-15
Lable, EF-04, Shelf 1	658-0490-16
Lable, EOAP	658-0499-05
Lable, Field Tool Identification	658-0941-01
Lable, Field Tool Identification wrap	658-0941-02

Miscellaneous Parts

Table G-5. Miscellaneous Part Numbers

Name	Part Numbers		Note
	North America	International	
Drives			
Dual CD-RW\DVD-ROM	870-2746-01	870-2746-02	T1x00 AS
Disk Drive, 120GB	804-1804-01	804-1804-R01	ULTRA ATA/100/133_7 200RPM
Panels			
Alarm side pane	870-0259-02	---	
Alarm indicator lamps	525-0036-02)	---	
Blank side panel	840-0017-02	---	
Gray tinted plastic rear covers	654-0075-01	654-0075-R01	
Brackets, unit separation	652-0609-01	652-0609-02	
Bracket	652-0954-01	652-0954-02	Fan
Kits			
Cable Rack Mounting Kit	804-1571-01	---	Heay duty frame
Cable Rack Mounting Kit	804-0219-01 804-0219-02	804-0219-R01 804-0219-R02	raised floor
external tooth washers	606-0062-01	---	fan bracket
Diode Board A	870-1608-01	---	
Diode Board A	870-1608-03	---	
Diode Board B	870-1608-02	---	
Diode Board B	870-1608-04	---	
Diode Upgrade kit	870-1831-01	---	For 870-1606-02
Diode Upgrade kit	870-1831-02	---	For 870-2320-01
E1 Interface Kit	890-1037-01	890-1037-06	
Mounting hardware kit	840-0092-01	840-0092-03	For heavy duty frame. South America/India only
Brackets, Screws, and other small items			
Brackets, unit separation	652-0609-01	652-0609-02	

Table G-5. Miscellaneous Part Numbers (Continued)

Name	Part Numbers		Note
	North America	International	
Bracket	652-0954-01	652-0954-02	Fan
Bracket, fan tray	652-0012-01	652-0012-02	Fan tray
Bracket, side, fan tray	652-0015-01	652-0015-02	Fan tray
Heat-shrink	804-0229-01	---	
Heat-shrink	804-0228-01	---	
logic ground cable lugs; ee terminal lugs	---	---	
Lugs, # 6 two-hole	502-0085-01	502-0085-R01	FAP connector
#6 AWG	690-0131-01	690-0131-R01	
1/0 pink lug	804-0977-01	804-0977-R01	
Pin Protector Assembly	830-0880-01		
Screws (12)	601-0010-01	---	
Screws	600-0193-01	---	12x24 .500 cs zinc fan bracket
Terminal lug	804-0817-02	804-0817-R02	
Terminating resistor	104-0032-01	---	E1 backplane

Power Cords for Peripherals

Table D-1. Power Cords for Peripherals

Country	Part Number		
USA	Cord provided	Latvia	804-1185-R01
Argentina	804-1185-R02	Liechtenstein	804-1185-R11
Australia	804-1185-R02	Lithuania	804-1185-R01
Austria	804-1185-R01	Luxembourg	804-1185-R01
Belgium	804-1185-R01	Malaysia	804-1185-R03
Brazil	804-1185-R01	Malta	804-1185-R03
Bulgaria	804-1185-R01	Mexico	Cord provided
Canada	Cord provided	Monaco	804-1185-R01
Chile	804-1185-R01	Netherlands	804-1185-R01
China	804-1185-R09	New Zealand	804-1185-R02
Columbia	Cord provided	Norway	804-1185-R01
Cyprus	804-1185-R03	Peru	804-1185-R01
Czech Republic	804-1185-R01	Philippines	Cord provided
Denmark	804-1185-R04	Poland	804-1185-R01
Egypt	804-1185-R01	Portugal	804-1185-R01
Estonia	804-1185-R01	Romania	804-1185-R01
Finland	804-1185-R01	Russia	804-1185-R01
France	804-1185-R07	Saudi Arabia	Cord provided
Germany	804-1185-R01	Singapore	804-1185-R03
Greece	804-1185-R01	Slovakia	804-1185-R01
Hong Kong	804-1185-R03	South Africa	804-1185-R06
Hungary	804-1185-R01	South Korea	804-1185-R01
Iceland	804-1185-R01	Spain	804-1185-R01
India	804-1185-R06	Sweden	804-1185-R01
Ireland	804-1185-R03	Switzerland	804-1185-R11
Israel	804-1185-R12	Taiwan	Cord provided
Italy	804-1185-R07	Turkey	804-1185-R01
Ivory Coast	804-1185-R01	United Kingdom	804-1185-R03
Japan	804-1185-R10	United Arab	804-1185-R03

Index

Symbols

%full threshold reached - upload required, 3-259

Numerics

0454 - Service Error Threshold Alarm Cleared, 3-576
1114 Clock selection mismatch, 3-527
1114 E1/T1 clock requires TDM-GTI, 3-524
1114, 1116 Clock selection mismatch, 3-531
1114, 1116 E1/T1 clock requires TDM-GTI, 3-526
1114-P 1114-S 1116-P clocks failed, 3-258
1114-P 1114-S 1116-S clocks failed, 3-257
1114-P 1114-S clocks failed, 3-256
1114-P 1116-P 1116-S clocks failed, 3-255
1114-P 1116-P clocks failed, 3-254
1114-P 1116-S clock failed, 3-253
1114-P clock failed, 3-252
1114-PHS clock failed, 3-283
1114-PHS, 1114-SHS clocks failed, 3-291
1114-PHS, 1114-SHS, 1116-PHS clocks failed, 3-295
1114-PHS, 1114-SHS, 1116-SHS clocks failed, 3-293
1114-PHS, 1116-PHS clocks failed, 3-287
1114-PHS, 1116-PHS, 1116-SHS clocks failed, 3-289
1114-PHS, 1116-SHS clocks failed, 3-285
1114-S 1116-P 1116-S clocks failed, 3-251
1114-S 1116-P clocks failed, 3-250
1114-S 1116-S clocks failed, 3-249
1114-S clock failed, 3-248
1114-SHS clock failed, 3-275
1114-SHS, 1116-PHS clocks failed, 3-279
1114-SHS, 1116-PHS, 1116-SHS clocks failed, 3-281
1114-SHS, 1116-SHS clocks failed, 3-277
1116 Clock selection mismatch, 3-529
1116 E1/T1 clock requires TDM-GTI, 3-525
1116-P 1116-S clocks failed, 3-247
1116-P clock failed, 3-246
1116-PHS clock failed, 3-271
1116-PHS, 1116-SHS clocks failed, 3-273
1116-S clock failed, 3-245
1116-SHS clock failed, 3-269
1330, 3-1020
870-2062-02, G-9

A

AAL, 1-21
AAL5, 1-21
AAL5CP, 1-21
AATM, 1-21
ACG, 1-21
ACG Node Overload Level Change, 3-842
ACM, 1-21, G-7
  LEDs, A-41
ACM card replacement, A-39
ACT, 1-21
Activat, 1-21
Active MASP
  LNP forced simplex mode, 3-111
Active MASP has become isolated, 3-102
ADJ DPC, 1-21
Adjacent Destination Point Code, 1-21
Adjacent Point Code, 1-21
Advanced Intelligent Network, 1-21
AI, 1-21
air filter, changing, 2-35, 2-36
air management card, A-77
air supply grille, removing, 2-37
airflow indicator arrows, 2-37
Alarm, 1-21
alarm board (FAP), 2-7
Alarm cleared by deleting card, 3-521
Alarm cleared by deleting route, 3-523
Alarm cleared by deleting SLK, 3-522
Alarm cleared for GPL, 3-99
Alarm cleared running non-activated GPL, 3-101
Alarm Clearing Procedures, 3-54
alarm conditions, FAP, 2-8
Alarm in Fuse panel, 3-167
Alarm LEDs on the Fuse and Alarm Panel (FAP), 3-7
Alarms
  Card, F-4

Clock (Holdover Clock), F-7
Clock System, F-7
Customer Defined Trouble (CDT), F-6
DCM, F-8
DLK, F-8
DPC System, F-10
DSM, F-11
E1 Port, F-11
EIR, F-12
EMAP, F-12
EMAP (NDC), F-12
EROUTE, F-13
Fuse, F-14
GLS, F-14
GPL, F-14
HS Clock System, F-15
IMT Bus, F-16
IMT System, F-16
INP System, F-16
IP TPS System, F-17
IP7, F-17
Linkset, F-18
LNP System, F-18
LSMS Connection, F-19
LSMS System, F-19
MCPM, F-19
MEAS System, F-20
MPS (ELAP/EPAP), F-20
MPS Alarm Support, F-21
NDC System, F-21, F-22
SCCP System, F-22, F-23
SEAS OAP, F-23
SEAS System, F-24
SEAS X25, F-24
Security Log, F-24
Security System, F-25
SLK, F-25
STPLAN, F-28
System, F-28
System GPL, F-29
T1, F-29
Terminal, F-29
X-LIST, F-29
Alarms appearing on the system terminal screen, 3-9
Alarms on Application Cards, 3-9
alarms, critical, 2-8
alarms, FAP, 2-9
alarms, fuse, 2-9
alarms, major, 2-8
alarms, minor, 2-8
All clocks have failed, 3-210
All high speed clocks have failed, 3-297
All IMT System level alarms cleared, 3-195
All OAP terminals are removed, 3-472
All SEAS UAL sessions unavailable, 3-446
All STC Networks Available, 3-585
ALM, 1-21
AMA, 1-21
Amem single bit error report, 3-739
American National Standards Institut, 1-21
ANSI, 1-21
AP, 1-21
APC, 1-21
APPL, 1-21
Application, 1-21
Application Communications Modul, 1-21
Application Communications Module (ACM) measurements, 4-51
Application Processor, 1-21
Application self recovery, 1-18
Application Server, 1-21
Application Server Process, 1-21
Application Service Module (ASM) measurements, 4-51
Application Services Module, 1-21
Application Trouble Handler, 1-21
AS, 1-21
AS Available, 3-360
AS Restricted, 3-361
AS Unavailable, 3-359
AS Unrestricted, 3-362
ASi, 1-21
ASi (Application Specific Interface), 1-21
ASM, 1-21, G-7
ASM with GLS, 1-21
ASM with SCCP, 1-21
ASM-GLS, 1-21
ASM-SCCP, 1-21
ASM-SCCP card replacement, A-36
ASP, 1-21
Associated State for Maintenance, 1-21
AST, 1-21
Asynchronous Transfer Mode, 1-21
ATH, 1-21
ATM, 1-21

ATM Adaptation Layer, 1-21
ATM Adaptation Layer Type 5, 1-21
ATM Applique, 1-21
Audible Alarms, 3-4
Audit of LNP backup database completed, 3-783
Audit of LNP database completed, 3-844
Automatic Call Gapping, 1-21
Automatic Message Accounting, 1-21
Availability reports, 4-46
Awaiting LSMS bulk download, 3-1044

B

backplane board (FAP), 2-7
backpower protection, 2-10
Backup LNP database corrupted, 3-542
Backup LNP database has been corrected, 3-552
Backup LNP database is inconsistent, 3-548
blown fuse, 2-9

C

Card backup database has been corrected, 3-129
Card backup database is corrupted, 3-131
Card backup database is inconsistent, 3-130
Card database has been corrected, 3-121
Card database is corrupted, 3-126
Card database is inconsistent, 3-122
Card DB is stable, 3-623
Card DB load timeout, check GLS card, 3-622
Card has been reloaded, 3-181
Card has reset, 3-90
Card is isolated from the system, 3-108
Card is not running approved GPL, 3-91
Card is present, 3-110
Card is running non-activated GPL, 3-100
Card not using config. SCTP csum method, 3-382
Card Replacement Procedures, A-1
Card responding normally, 3-510
Card successfully loaded with data, 3-211
Card temperature exceeds nominal lvl T1, 3-162
Card temperature is critical lvl T2, 3-158
Card temperature within nominal levels, 3-166
change features, chg-feat
  DCM, 3-388
chg-db:action=backup:dest=fixed, 3-84
CI, G-7
  LEDs, A-60
Cleaning Printer, 2-38
Cleaning the OAP Fan Filter, 2-35, 2-36
CLLI-based Names Enabled, 4-9
Clock A for card failed, B normal, 3-112
Clock A for card normal, 3-118
Clock alarm(s) cleared, 3-201
Clock B for card failed, A normal, 3-114
Clock B for card normal, 3-119
Clock selection corrected, 3-533
Clocks A and B for card failed, 3-116
Clocks A and B for card normal, 3-120
Clocks A and B TSCs are resynchronized, 3-178
Cnvrsn Discard
  CGPA PC alias undefined, 3-854
  Invalid SCCP element len, 3-859
  SCCP MSU too large, 3-852
Cnvrsn Discard - Invalid TCAP element, 3-857
Cnvrsn Discard - Invalid TCAP element len, 3-858
Command Driven Loopback (CDL), 3-78
Component Measurements, 4-25
Config. SCTP csum method alarm cleared, 3-383
Configuration data checksum alarm cleared, 3-486
Configuration data checksum mismatch, 3-483
Congestion
  Copy Function De-activated, 3-593
Conv to intl num - Dflt CC not found, 3-932
Conv to intl num - Dflt MCC not found, 3-934
Conv to intl num - Dflt MNC not found, 3-935
Conv to intl num - Dflt NDC not found, 3-933
Conversion Discard
  Invalid SCCP msg type, 3-853
Conversion of MGT to IMSI not possible, 3-938
Cooling fan failure, 3-387
Cooling fan normal, 3-392
Copy Function Activated, 3-594
Corrective Maintenance, 1-3
Critical Alarm, 3-4

critical alarms, 2-8
Critical Application Failure(s), 3-492
Critical customer trouble detected, 3-149
Critical holdover clock trouble detected, 3-154
Critical Platform Failure(s), 3-491
Customer Contact Center, 1-13
Customer Support Center, 1-13
Customer Support Centers, 1-13
Customer trouble cleared, 3-153
Customer trouble detected, 3-152

D

Daily Availability Measurements, 4-41
Daily availability reports, 4-41
Daily LNP System Wide Measurements, 4-67
Daily Maintenance Measurements, 4-54
Daily Procedures, 2-18
Data Collection Details, 4-10
Database action ended - FAIL, 3-782
Database action ended - OK, 3-781
Database Archival, 2-18, 2-23, 2-27, 2-41
Database BACKUP started, 3-779
Database RESTORE started, 3-780
Database Unsolicited Output Message Group, D-28
Day-To-Hour Availability Measurements, 4-44
Day-to-hour availabiltiy reports, 4-44
Day-to-Hour Maintenance Measurements, 4-82
Day-to-hour reports, 4-82
DB restore has cleared and Disabled PDS, 3-952
DCM, G-7
  change features, chg-feat, 3-388
  LEDs, A-45
DCM card replacement, A-42
Degraded Mode - 1 card failed, 3-602
Degraded Mode - multiple cards failed, 3-603
Degraded Mode, Invalid OAM HW config, 3-557
Determine LIM, MIM, and MPL Changeout Time, A-16
diode board (FAP), 2-7
diode boards, removing, 2-10
diode jumper, 2-9
diode testing, 2-9
disk measurement status unreadable, 3-736
DPC, F-9
DPC - SS status changed, 3-432
DPC is allowed, 3-400
DPC is prohibited, 3-402
DPC is restricted, 3-401
DPC subsystem has been deleted, 3-421
DPC Subsystem is Abnormal, 3-429
DPC subsystem is allowed, 3-418
DPC subsystem is blocked, 3-419
DPC Subsystem is Normal, 3-428
DPC subsystem is prohibited, 3-420
DPC Subsystem is prohibited and blocked, 3-427
DSM, G-7
  LEDs, A-45
Dynamic database is inconsistent, 3-632, 3-633

E

E1/T1 MIM
  LEDs, A-23
Eagle Release 31.5 UAM/UIM Changes, 3-40
Eagle Release 33.0 UAM/UIM Changes, 3-40
EDCM, G-7
EDCM (single-slot)
  LEDs, A-46
EDCM-A (single-slot)
  LEDs, A-46
EILA (P/N 870-2049-01, G-7
EIR Subsystem is available, 3-580
EIR Subsystem is disabled, 3-578
EIR Subsystem is not available, 3-577
EIR Subsystem is removed, 3-581
EIR Subsystem normal,card(s) abnormal, 3-579
elements overwritten, 3-785
EMS Agent available, 3-479
EMS Agent unavailable, 3-477
End Cabinet Alarm Indicators, 3-9
Entering forced simplex mode, 3-105
enttype=lsonismt, 4-121
EOAP, G-8, G-10
EROUTE capacity normal, card(s) abnormal, 3-590
EROUTE is Removed, 3-586
EROUTE System Capacity Exceeded, 3-589
EROUTE System is Available, 3-587
EROUTE System threshold Exceeded, 3-588
Exiting Degraded Mode, 3-558

extender board (FAP), 2-8

F

Failure Inhibiting EIR SS, 3-678, 3-679
Failure Inhibiting LNP SS, 3-841
Failure Inhibiting Local SS, 3-851
Failure on both IMT A and IMT B, 3-199
Failures detected on one IMT bus, 3-196
fan door, replacing, 2-37
FAP, 2-3
FAP alarm conditions, 2-8
FAP alarms, 2-9
FAP component functions, 2-6
FAP component replacement, 2-7
FAP components, 2-4, 2-5
FAP components, hot swapping, 2-7
FAP functions, 2-3
FAP Load Balance Verification (PN 870-0243-XX only), 2-28
File Naming Conventions
CLLI-based Names Disabled, 4-8
CLLI-based Names Enabled, 4-9
File Transfer for LNP Measurements, 2-21
Full LNP database reload initiated, 3-927
fuse alarm, 2-9
fuse and alarm panel, 2-3
Fuse and alarm panel front items, 3-8
fuse holder board (FAP), 2-8
Fuse Panel alarm has cleared, 3-169
fuse positions
DCM fan assembly, 3-387
Fuse Spares Inventory, 2-39
fuse, blown, 2-9

G

Gateway Measurements, 4-111
GLS have been removed from the system, 3-377
GLS is at minimum service limit, 3-373
GLS is available, 3-372
GLS is not available, 3-375
GMT fuse holders, 3-7
GMT fuses, 3-7
GPL has been corrected, 3-132
GPL is corrupted, 3-133
GPSM-II
LEDs, A-9
grille, removing, 2-37
Ground Cable, G-4
GSM Map Screening rcvd unknown origin, 3-940
GSMOPTS
EIR Global Response is ON, 3-1007, 3-1008
GTI input clock anomalies detected, 3-860
GWS MSU discard threshold exceeded, 3-831
GWS MSU discarded by redirect function, 3-741
GWS MSU too large to be redirected, 3-743
GWS rcvd a priority that is not allowed, 3-650
GWS rcvd AFTPC that could not be CNCFd, 3-893
GWS rcvd AFTPC that could not be RDCTd, 3-795
GWS rcvd CDPA that could not be CNCFd, 3-889
GWS rcvd CDPA that could not be RDCTd, 3-791
GWS rcvd CGPA that could not be CNCFd, 3-891
GWS rcvd CGPA that could not be RDCTd, 3-793
GWS rcvd Cld Party that is not allowed, 3-655
GWS rcvd Clg Party that is not allowed, 3-653
GWS rcvd DPC that is blocked, 3-646
GWS rcvd DPC that is not allowed, 3-642
GWS rcvd H0/H1 that is not allowed, 3-762
GWS rcvd invalid GTI in TT screening, 3-839
GWS rcvd ISUP that is not allowed, 3-836
GWS rcvd nonSCCP msg in CGPA/CDPA screen, 3-838
GWS rcvd nonSNM msg in DESTFLD screening, 3-837
GWS rcvd OPC that is blocked, 3-644
GWS rcvd OPC that is not allowed, 3-640
GWS rcvd RSP, AFTPC not in routing tbl, 3-723
GWS rcvd RSR, AFTPC not in routing tbl, 3-724
GWS rcvd SCMG with not allowed AFTPC, 3-659
GWS rcvd SIO that is not allowed, 3-648
GWS rcvd TFA, AFTPC not in routing tbl, 3-721

GWS rcvd TFC, AFTPC not in routing tbl, 3-652, 3-776, 3-777, 3-778
GWS rcvd TFP, AFTPC not in routing tbl, 3-719
GWS rcvd TFR, AFTPC not in routing tbl, 3-720
GWS rcvd Translation Type not allowed, 3-657
GWS rcvd TT that could not be CNCFd, 3-895
GWS rcvd TT that could not be RDCTd, 3-797
GWS rcvd UPU, AFTPC not in routing tbl, 3-722
GX25 cannot make connection, 3-818
GX25 DPC not defined, 3-815
GX25 incorrect X25 address, 3-810
GX25 logical channel cleared, 3-820
GX25 outbound data exceeds packet size, 3-806
GX25 route already connected, 3-809
GX25 route not available, 3-808
GX25 route not found, 3-807
GX25 unexpected restart received, 3-821
GX25 unrecognized X25 called address, 3-817
GX25 unrecognized X25 calling address, 3-816
GX25 unsupported MSU type received, 3-813
GX25 unsupported packet type received, 3-811

H

hardware return, 1-14
Hardware Verification Codes, E-2
High Speed Clock A for card normal, 3-232
High speed clock alarm(s) cleared, 3-298
High Speed Clock B for card normal, 3-233
High Speed Clocks A and B for card failed, 3-230
High Speed Clocks A and B for card normal, 3-244
HIPR, G-8
HIPR, High-Speed Inter-processor Message Transport Packet Router, A-16
HMUX, G-8
LEDs, A-15
HMUX not responding Error, 3-512
Holdover clock trouble cleared, 3-157
hot-swapping FAP components, 2-7
Hourly Maintenance Measurements, 4-95
HS Clock A for card failed, B normal, 3-226
HS Clock B for card failed, A normal, 3-228
HW cannot support purchased TPS rate, 3-631
HW limiting TPS rate alarm cleared, 3-630

I

ILA, A-17, G-8
ILE1, G-8
Illegal Address Error, 3-511
Illegal Address Error has Cleared, 3-509
IMT allowed, 3-182
IMT Bus States, 3-10
IMT inhibited, 3-183
IMT System Alarm Level Determination, 3-10
Incompatible HW for provisioned slot, 3-184
Incorrect feature configuration, 3-136
Incorrect Motherboard - CPU, 3-559
Incorrect port configuration, 3-381
Inh EIR SS request already outstanding, 3-677
Inh LNP SS request already outstanding, 3-840, 3-850
Inserting the 2.3 Gbyte Removable Cartridge, 2-17
Insufficient memory for LNP, 3-534
Insufficient memory for provisioning, 3-358
Integrated Link Interface Module E1, G-8
Invalid digits in IS41 MAP Digits parm, 3-803, D-6
Invalid digits in MAP MSISDN parameter, 3-992
Invalid Length for Map IMEI Parameter, 3-764
Invalid length of conditioned digits, 3-936
Invalid length of prefixed digits, 3-997
Invalid OAM card type for TSC sync, 3-142, 3-143
INW Allowed card to DDL crossload, 3-888
INW Card failed to DDL crossload, 3-887
INW Card failed to reset, 3-884
INW Card reset command issued, 3-877
INW Detected card loaded, 3-879
INW Failed to assert DDL inhibition, 3-885
INW Failed to remove DDL inhibition, 3-886
INW MAIN card as last to be reset, 3-875
INW Need to reset/remove/inhibit card, 3-883
INW Removed DDL inhibition, 3-882
INW Waiting for card loading validation, 3-878
IP connection available, 3-173
IP Connection Congestion Timeout, 3-870
IP Connection Failed, 3-766

IP Connection manually removed, 3-176
IP Connection Refused, 3-871
IP connection, cannot resolve RHOST, 3-872
IP Link A is down, 3-624
IP Link A is up, 3-626
IP Link B is down, 3-627
IP Link B is up, 3-629
IP7 connection congested, 3-174
IP7 connection unavailable, 3-170
IPMX/HMUX Card Replacement, A-10
IS-41 LNP Qry rejected
WNP is OFF, 3-950
ISCC loopback failed, 3-833
ISCC loopback in progress, 3-835
ISCC loopback success, 3-832
ITU ANSI translation not supported, 3-688
ITU GWY
CGB buffer full, 3-759
CPC conversion failure, 3-749
GRS buffer full, 3-757
HOH1 conversion failure, 3-753
Invalid ISUP msg structure, 3-756
OPC conversion failure, 3-751
rcvd msg type cannot convert, 3-754
RSC buffer full, 3-758

J

jumper board (FAP), 2-8
jumper, diode, 2-9
jumper, P71, 2-10, 2-11
jumper, P72, 2-10, 2-11

L

LEDs
ACM, A-41
CI, A-60
DCM, A-45
DSM, A-45
E1/T1 MIM, A-23
EDCM (single-slot), A-46
EDCM-A (single-slot), A-46
GPSM-II, A-9
HMUX, A-15
MCA, A-70
MDAL, A-4
MIS, A-66
MPL LIM, A-24
MPLT, A-25
ST3, A-64
TDM-GTI, A-55
TOCA, A-69
LEDs, OP/MAINT, 2-8
LEDs, PWR A, 2-8
LEDs, PWR B, 2-8
LFS test terminated with OAM switch over, 3-745
LIM, G-8
LIM(s) have been denied EROUTE service, 3-598
LIM(s) have been denied SCCP service, 3-431
LIM(s) have been denied STPLAN service, 3-236
LIM, MIM, and MPL Changeout Time, A-16
LIM-AINF, G-8
LIM-ATM, G-8
LIM-DS0A, G-8
Link expected IP TPS threshold exceeded, 3-205
Link Fault Sectionalization, 3-71
Hardware Configuration, 3-72
Test Details, 3-74
Test Indicators, 3-74
Test Report, 3-74
link fault sectionalization test, 3-71
link fault sectionalization test procedure, 3-76
link fault sectionalization test, commands, 3-75
link fault sectionalization test, configuring data, 3-75
link fault sectionalization test, hardware configuration, 3-72
link fault sectionalization test, indicators, 3-74
link fault sectionalization test, report, 3-74
link fault sectionalization test, restrictions, 3-72
link fault sectionalization test, starting, 3-76
link fault sectionalization test, stopping, 3-77
Link Interface Module (LIM) measurements, 4-50
Link IP TPS normal, 3-209
Link Maintenance Commands
act-cdl, 3-83
act-lbp, 3-75
chg-lbp, 3-75
dact-cdl, 3-83
dact-lbp, 3-75

dlt-lbp, 3-75
ent-lbp, 3-75
rept-stat-cdl, 3-83
rept-stat-lfs, 3-75
rept-stat-tstslk, 3-83
rtrv-lbp, 3-75
tst-slk, 3-79, 3-83
Link Maintenance Enhancements, 3-77
Command Driven Loopback, 3-78
Commands, 3-83
Test Indicators, 3-78, 3-80
Test Signaling Link, 3-79
tst-slk Loopback Test Details, 3-80
Link Maintenance Unsolicited Output Message Group, D-7
Link not Monitored, 3-595
Linkset IP TPS normal, 3-208
Linkset IP TPS threshold exceeded, 3-203
LNP ACG node overload, 3-555
LNP database audit - internal error, 3-784
LNP database audit is disabled, 3-843
LNP database corrupted, 3-539, 3-632, 3-633
LNP database has been corrected, 3-551
LNP Database IMPORT started, 3-790
LNP database is inconsistent, 3-544
LNP Database Unsolicited Output Message Group, D-27
LNP Day Meas. Discarded for NPANXX, 3-925
LNP DTH Measurements Discarded for DPC, 3-873
LNP Incremental Loading, 3-931
LNP Ported LRNs Capacity Normal, 3-366
LNP Ported LRNs exceeds Feat. Capacity, 3-365
LNP Ported NPAs Capacity Normal, 3-368
LNP Ported NPAs exceeds Feat. Capacity, 3-367
LNP Ported TNs Capacity Normal, 3-364
LNP Ported TNs exceeds Feat. Capacity, 3-363
LNP rcvd query with Message Relay TT, 3-789
LNP rcvd query with undefined TT/SERV, 3-787
LNP received query from unknown CGPA PC, 3-786
LNP Subsystem is available, 3-538
LNP Subsystem is disabled, 3-554
LNP Subsystem is not available, 3-536
LNP Subsystem is removed, 3-553
LNP Subsystem normal, card(s) abnormal, 3-537
LNP updates allowed
loading mode stability, 3-930
LNP updates inhibited
loading mode stability, 3-929
Loading failed
bad checksum returned, 3-215
data load timeout, 3-217
data read Error, 3-213
disk read failed, 3-222
disk read prep error, 3-220
disk read response error, 3-221
GPL format error, 3-219
GPL load timeout, 3-216
invalid GPL, 3-218
table not found, 3-212
Local Subsystem is available, 3-515
Local Subsystem is disabled, 3-517
Local Subsystem is not available, 3-516
Local Subsystem is removed, 3-518
Local Subsystem normal, card(s) abnormal, 3-519
LOCREQ rcvd - IS412GSM not provisioned, 3-801
LOGBUFROVFL-SECULOG - upload required, 3-260
Loopback invalid, 3-847
Loopback prevented, 3-846
LSMS bulk download cancelled at LSMS, 3-1047
LSMS bulk download complete, 3-1046
LSMS bulk download in progress, 3-1045
LSMS bulk load complete, 3-135
LSMS bulk load required, 3-134
LSMS is at min. service limit, 3-480
LSMS is available, 3-468
LSMS is unavailable, 3-469
LSMS Q.3 association available, 3-476
LSMS Q.3 association unavailable, 3-473
LSS
No Map IMEI Parameter present, 3-765

M

Maintenance Disk and Alarm (MDAL) Card Replacement, A-3

Maintenance software, 1-18
Maintenance Status Reports, 4-129
Maintenance strategy, 1-18, 1-19
Major Alarm, 3-4
major alarms, 2-8
Major Application Failure(s), 3-494
Major customer trouble detected, 3-150
Major failures detected on both IMTs, 3-200
Major holdover clock trouble detected, 3-155
Major IMT failure detected, 3-191
Major Platform Failure(s), 3-493
Making a Backup of the Database to the Removable Cartridge, 2-18
manual
  related publications, 1-4
Map Screening cannot Duplicate MSU, 3-955
Map Screening cannot forward MSU, 3-715, 3-953
MAS Communication Application Processor (MCAP) Card Replacement, A-5
MASP became active, 3-103
MASP became standby, 3-104
MCA
  LEDs, A-70
MCAP, A-5
MDAL
  LEDs, A-4
MDAL alarm cleared, 3-180
MDAL LEDs, 3-5
MDAL not responding, 3-179
Meas sync not allowed from old version, 3-716
Measurement Reports
  Availability, 4-46
  Component, 4-25
  Daily Availability, 4-41
  Daily Maintenance, 4-54
  Day-To-Hour Availability, 4-44
  Day-to-Hour Maintenance, 4-82
  Gateway, 4-111
  Hourly Maintenance, 4-95
  Maintenance Status, 4-129
  Network Management, 4-33
  Record Base, 4-122
  STP System Totals, 4-13
Measurements
  OAM Based, 4-5
  Optional 15-Minute, 4-10
  Platform, 4-6
Measurements data copy failure, 3-946
Measurements Platform, 4-6
Measurements subsystem available, 3-605
Measurements subsystem unavailable, 3-604
Minor Alarm, 3-4
minor alarms, 2-8
Minor Application Failure(s), 3-496
Minor customer trouble detected, 3-151
Minor holdover clock trouble detected, 3-156
Minor IMT failure detected, 3-188
Minor Platform Failure(s), 3-495
MIS
  LEDs, A-66
MNP Circular Route Detected, 3-951
MO Removable Cartridge, 2-14
MO Removable Cartridge Description, 2-13
Modem Not Working, 3-68, 3-69
Monthly Procedures, 2-27
Motherboard BIP invalid, 3-185
Motherboard BIP valid, 3-186
MPL LIM
  LEDs, A-24
MPLT
  LEDs, A-25
MPS available, 3-344
MPS unavailable, 3-345
MSU reception threshold exceeded, 3-830
MTP
  Changeback T5 timeout, 3-738
  link bypassed SLT phase, 3-730
MTP Adj PC not in routing table, 3-661
MTP Invalid TFA received, 3-823
MTP Invalid TFR received, 3-824
MTP Message Received for Network 255, 3-662
MTP rcvd invalid H0/H1 code, 3-638
MTP rcvd invalid TFC - status 0, 3-637
MTP rcvd Transfer Controlled (TFC), 3-636
MTP rcvd unknown DPC, 3-639
MTP rcvd UPU - User SCCP, Cause invalid, 3-1006
MTP rcvd User Part Unavailable, 3-634, 3-1006
MTP RSTRT rcvd unexpected user traffic, 3-746

N

NDC Q.3 association is available, 3-265
NDC Q.3 association is unavailable, 3-264
NDC Subsystem is available, 3-268
NDC Subsystem is not available, 3-266
Network Management Measurements, 4-33
Node is no longer isolated, 3-399
Node isolated due to SLK failures, 3-397
NTP Time Available, 3-592
NTP Time Unavailable, 3-591

O

OA&M IP Security feature disabled, 3-299
OA&M IP Security feature is OFF, 3-513
OA&M IP Security feature is ON, 3-514
OAP filesystem full, 3-482
OAP is available, 3-464
OAP terminals available, 3-464
OAP terminals inhibited, 3-459
OAP Unavailable, 3-437
Obituaries, 3-62
One SEAS TDM Port unavailable, 3-465
OP/MAINT LED, 2-8
Optional 15-Minute Measurements, 4-10
Output Message Format, 3-38

P

P/N 690-0131-01, G-14
P/N 830-0846-01, G-3
Persistent device state tbl corrupt, 3-146
Persistent device state tbl diff version, 3-147
pink lug, G-14
Ported subscriber SMSC matches Home SMSC Addr, 3-799
Power Down of In-Service Eagle System, 3-84
Power Up of the Eagle System, 3-88
Preventing Dust Buildups, 2-43
Preventive Maintenance, 1-3
Printer Inspection, 2-25
Printer Not Working, 3-65
Program Update Unsolicited Output Message Group, D-28
PWR A LED, 2-8
PWR B LED, 2-8

Q

Quarterly Procedures, 2-41

R

RCVRY-E1F
FAC-E1 available, 3-507
RCVRY-LINK-CGST
congestion has cleared, 3-351
congestion level 2 to 1, 3-350
congestion level 3 to 2, 3-349
discard has cleared, 3-357
discard level 2 to 1, 3-356
discard level 3 to 2, 3-355
RCVRY-LKF
link available, 3-300
RCVRY-LKSTO
Alarm clr'd by deleting SLK, 3-520
Link set allowed, 3-408
RCVRY-MTPLP-RST
Circ rte status cleared, 3-436
RCVRY-MTP-RSTRT MTP Restart
completed, 3-748
Real time clock battery low, 3-137
Real time clock battery restored, 3-138
rear covers, G-13
Record Base Measurements, 4-122
Rectifier Voltage Inspection/Recording, 2-44
RECVY-NMTSK-DSCD
SNM Discard Abated, 3-394
removing diode boards, 2-10
Removing the 2.3 Gbyte Removable Cartridge, 2-17
Replacement cables list, A-82
Replacement parts list, A-81
replacing FAP components, 2-7
Report generation failure, 3-947
Report Parameters, 4-12
Report parameters, 4-12
Report transfer failure FTP Server, 3-948
Reports, 4-13
REPT COND
IMT GPL reloading, 3-768
system alive, 3-740
REPT EVT
IMT GPL reloading, 3-767
Incremental Loading, 3-1001
REPT-ALMINH

alarm output enabled, 3-379
alarm output PERM inhibited, 3-378
alarm output TEMP inhibited, 3-380
REPT-E1F
FAC-E1 10E-3 BER failed, 3-506
FAC-E1 AIS detected, 3-504
FAC-E1 Far End failure, 3-505
FAC-E1 LOF failure, 3-503
FAC-E1 LOS failure, 3-502
REPT-LFK
LM Timer NO-CREDIT expired, 3-333
REPT-LINK-CGST
congestion level 0 to 1, 3-346
congestion level 1 to 2, 3-347
congestion level 2 to 3, 3-348
discard level 0 to 1, 3-352
discard level 1 to 2, 3-353
discard level 2 to 3, 3-354
REPT-LINK-MANUAV
local blocked, 3-328
REPT-LKF
ABN - rcvd 2 of 3 invalid BSN, 3-314
ABN - rcvd 2 of 3 invalid FIB, 3-315
APF - failed proving period, 3-309
APF - lvl-2 T1 expd (not ready), 3-306
APF - lvl-2 T1 expd (ready), 3-305
APF - lvl-2 T2 expired, 3-308
APF - lvl-2 T3 expired, 3-307
COO - rcvd changeover order, 3-318
FAC - DS1 LCD failure, 3-342
FAC - DS1 LOF failure, 3-341
false congestion restart, 3-319
HWP -too many link interrupts, 3-302
link test failed, 3-325
lost data, 3-303
MTP link restart delayed, 3-320
not aligned, 3-331
OSA - received SIE, 3-312
OSA - received SIN, 3-311
OSA - received SIO, 3-310
OSA - received SIOS, 3-313
rcvd SSCOP END-mgmnt initiated, 3-339
rcvd SSCOP END-out of service, 3-337
rcvd SSCOP END-protocol error, 3-338
remote blocked, 3-326, 3-327
remote congestion timeout, 3-316
remote FE loopback, 3-323
remote NE loopback, 3-301, 3-324
RMI remote inhibited, 3-329
X25 link unavailable, 3-321
XDA - excess acknowledge delay, 3-317
XDA-Timer NO-RESPONSE expired, 3-334, 3-341, 3-342
XER - ISERM threshold exceeded, 3-343
XER - SUERM threshold exceeded, 3-304
REPT-LKSTO
Link set prohibited, 3-409
REPT-MTPERR
MTP rcvd invalid SIO, 3-663
REPT-MTPLP-DET
Circ rte det(cong), 3-411
REPT-MTPLP-SUST
Sustained circ rte(cong), 3-413
REPT-MTP-RSTRT MTP Restart started, 3-747
REPT-NMTSK-DSCD
SNM Discard Onset, 3-393
REPT-OVSZMSG
MTP MSU too large to route, 3-848
SCCP MSU too large to rte, 3-849
REPT-T1F
FAC-T1 Alarm, 3-490, 3-500, 3-508
FAC-T1 available, 3-501
FAC-T1 LOF failure, 3-498
FAC-T1 LOS failure, 3-497
FAC-T1 Remote Alarm, 3-499
REPT-XLST-TIMO
X-LIST entry expired, 3-822
Retrieve Trouble Report, 3-55
Route is allowed, 3-403
Route is prohibited, 3-405
Route is restricted, 3-404
RTDB database capacity alarm cleared, 3-567
RTDB database capacity is 100% full, 3-560
RTDB database capacity is 80 full%, 3-566
RTDB database corrupted, 3-561
RTDB database has been corrected, 3-565
RTDB database incoherent, 3-568
RTDB database is inconsistent, 3-563
RTDB reload required, 3-571
RTDB resynchronization in progress, 3-570
RTDB Table FAK Capacity Normal, 3-371
RTDB Table Level 1 FAK Cap Exceeded, 3-370
RTDB Table Level 2 FAK Cap Exceeded, 3-369

rtrv-log command, 3-60
rtrv-trbltx command, 3-61
rtrv-trbltx report, 3-61

S

SCCP capacity normal, card(s) abnormal, 3-423
SCCP did not route - bad translation, 3-692, 3-905
SCCP did not route - DPC congested, 3-695, 3-912, 3-914
SCCP did not route - DPC not in MAP tbl, 3-696, 3-914
SCCP did not route - DPC OOS, 3-693, 3-861, 3-909
SCCP did not route - SS congested, 3-698, 3-918
SCCP did not route - SS not in MAP tbl, 3-699, 3-920
SCCP did not route - SS OOS, 3-697, 3-916
SCCP Encode Failure, 3-922, 3-923
SCCP is available, 3-422
SCCP is not available, 3-426
SCCP is removed, 3-430
SCCP rcvd GSM Map Opcode w/forbid param, 3-942
SCCP rcvd inv Cld Party - bad GT ind, 3-676, 3-897
SCCP rcvd inv Cld Party - bad network, 3-680, 3-899
SCCP rcvd inv Cld Party - no SSN, 3-681, 3-901
SCCP rcvd inv GT - bad Translation Type, 3-691
SCCP rcvd inv GT - invalid selectors, 3-903
SCCP rcvd inv LSS - bad SSN, 3-708, 3-907
SCCP rcvd inv msg class, 3-672
SCCP rcvd inv msg length, 3-671
SCCP rcvd inv SCMG - bad AFTPC, 3-709
SCCP rcvd inv SCMG - bad length, 3-712
SCCP rcvd inv SCMG - bad msg type, 3-713
SCCP rcvd inv SCMG - bad subsystem, 3-711
SCCP rcvd inv SCMG - invalid SOR, 3-729
SCCP rcvd invalid UDTS msg, 3-664
SCCP rcvd invalid XUDT msg, 3-666
SCCP rcvd invalid XUDTS/LUDTS msg, 3-667
SCCP rcvd undefined Map Op-Code, 3-944
SCCP rcvd unknown msg type, 3-670
SCCP rsp did not route - bad Selectors, 3-686
SCCP rsp did not route - bad Xlation, 3-684
SCCP rsp did not route - invalid GTI, 3-682
SCCP rsp did not route - invalid TT, 3-683
SCCP rsp did not route - no SSN in msg or DB, 3-689
SCCP rsp did not route - SSP not True PC, 3-685
SCCP screen set is too large, 3-718
SCCP XUDT(S) msg
  inv segmentation parm, 3-773
SCCP XUDT/LUDT msg
  Hop Counter violation, 3-769
  inv opt portion len, 3-771
SCCP-CNV
  Unable to convert ANSI CDPA GT, 3-700
  Unable to convert ANSI CGPA GT, 3-702
  Unable to convert ITU CDPA GT, 3-704
  Unable to convert ITU CGPA GT, 3-706
Scheduled transfer failure, 3-949
SEAS is at min service limit, 3-451
SEAS is available, 3-462
SEAS is removed, 3-463
SEAS PVC unavailable, 3-444
SEAS UAL session unavailable, 3-448
SEAS UAL unavailable, 3-440
SEAS unavailable, 3-455
SEAS X.25 Link is available, 3-450
SEAS X.25 Link unavailable, 3-442
SECMTPMATE - rcvd mate PC on non C-link, 3-1002
SECMTPSID - rcvd MSU with OPC = SID, 3-1003
SECMTPSNM - no rte to OPC/AFTPC, 3-1004
SECSCCPSCMG - no rte to AFTPC, 3-1005
Security Administration Unsolicited Output Message Group, D-27
Security log exception cleared, 3-262
Security log failed, 3-263
Semi-Annual Procedures, 2-45
SLAN DLK ping test completed, 3-805
SLK Inhibit Denied, 3-826
SLK Inhibit Response Timeout, 3-827
SLK Level-3 T19 timer expired, 3-825
SLK Uninhibit Denied, 3-828
SLK Uninhibit Response Timeout, 3-829

SLTC aborted
unable to perform the test, 3-735
SLTC failure
bad data pattern, 3-728
failed link, 3-733
invalid Point Code (DPC), 3-732
invalid Point Code (OPC), 3-725
invalid SLC, 3-726
no response, 3-727
SLTC success
manual test passed, 3-734
SNM Overload Abated, 3-396
SNM Overload Onset, 3-395
Spare Inventory Rotation, 2-45
SS7 and IP7, LIM, MIM, and MPL Card Replacement, A-17
SS7 LIM, MIM, and MPL Card Replacement, A-17
SSH Host Keys Loaded, 3-1043
SSH Host Keys Regenerated, 3-1042
ST3
LEDs, A-64
Standby MASP allowed, 3-601
Standby MASP inhibited, 3-600
Standby TDM failure, 3-144
Standby TDM failure cleared, 3-145
STC Network Available, 3-583
STC Network Unavailable, 3-582
Stdby security log - upload required, 3-261
STP System Totals (SYSTOT) Measurements, 4-13
STPLAN capacity normal, card(s) abnormal, 3-235
STPLAN connection available, 3-241
STPLAN connection unavailable, 3-239
STPLAN is available, 3-234
STPLAN is removed, 3-238
STPLAN not available, 3-237
String Data Dump, 3-717, 3-761
System Alarm Levels, 3-4
System IP TPS normal, 3-207
System IP TPS threshold exceeded, 3-202
System maintenance log, 1-19
System Maintenance Unsolicited Output Message Group, D-3
System Meas limit exceeded for LSONISMT, 3-669
System Meas. Limit exceeded for LRN, 3-1011
System Meas. Limit exceeded for LSDESTNI, 3-674
System Meas. Limit exceeded for LSORIGNI, 3-673
System Meas. Limit exceeded for NPANXX, 3-1012
System Meas. Limit exceeded for ORIGNI/NINC, 3-675
System release alarm cleared, 3-223
System release GPL(s) not approved, 3-224
System release version unknown, 3-225
System Reports Analysis, 2-20
System SCCP TPS Capacity Exceeded, 3-556
System SCCP TPS Threshold exceeded, 3-424
System total reports, 4-13

T

TDM, G-9
TDM-GTI
LEDs, A-55
Technical Assistance Centers, 1-13
Telnet terminal connection successful, 3-714, 3-1039
Temp Key(s) expiration alarm cleared, 3-487
Temp Key(s) expiring soon, 3-488
Temp Key(s) have expired, 3-489
Terminal Disk Module (TDM), A-47
Terminal enabled, 3-139, 3-1040
Terminal failed, 3-141, 3-1041
Terminal Not Responding, 3-63
Test E1 and T1 Ports, 3-80
test mode, 3-89
testing diodes, 2-9
Timestamp Invalid, 3-596
Timestamp Valid, 3-597
TM Adaptation Layer Type 5 Common Part, 1-21
TOCA, G-9
LEDs, A-69
Traffic Measurements
Measurement periods, 4-12
Transaction Service Module, A-30
Transaction Services Module (TSM), A-30
Translation PC is Eagle's, 3-993
Translation PC type is ANSI, 3-995
TRBL Queue is full, 3-785
Trouble Detection, 3-4

TSM, G-9
TSM-GLS card replacement, A-34
tst-e1, 3-83
tst-slk command, 3-79
tst-slk Support, 3-79, 3-80
tst-t1, 3-83
TVG granter failed, 3-384
TVG granter recovered (Eagle system), 3-386

U

UAM Troubleshooting Procedures, 3-89
UIM Redirect Unsolicited Output Message Group, D-28
UIM Troubleshooting Procedures, 3-89
Unexpected disk access timeout, 3-760
Unsolicited Alarm Messages, 3-11
Unsolicited Information Messages, 3-27
Unsolicited Output Message Groups
  Application Subsystem, D-16
  Card, D-13
  Clock, D-24
  Database, D-28
  GTT, D-20
  GWS, D-23
  Link Maintenance, D-7
  LNP Database, D-27
  Measurements Maintenance, D-26
  Monitor, D-29
  MPS, D-28
  Program Update, D-28
  SEAS Maintenance, D-30
  Security Administration, D-27
  SLAN, D-30
  System Maintenance, D-3
  UIM Redirect, D-28
Updates allowed
  loading stability, 3-1000
Updates inhibited
  loading stability, 3-999

V

Visual Alarms, 3-5

W

Weekly Procedures, 2-23
Wrist Strap Test, 2-40

X

X.25 LIM replacement, A-27
X.25 message conversion
  SS7 to X.25, B-5
  X.25 to SS7, B-3
X.25/SS7 Message Conversion, B-1, D-1, E-1, F-1
X25 logical channels available, 3-242
X25 no logical channels available, 3-243
X-LIST occupancy below threshold, 3-417
X-LIST occupancy threshold exceeded, 3-415
X-LIST space full condition abated, 3-435
X-LIST space full-entry(s) discarded, 3-433