Tekelec EAGLE® 5
Integrated Signaling System

Feature Manual - A-Port™

910-4476-001 Revision A
November 2006

TEKELEC

RoHS 5/6 - As of July 1, 2006, all products that comprise new installations shipped to European Union member countries will comply with the EU Directive 2002/95/EC "RoHS" (Restriction of Hazardous Substances). The exemption for lead-based solder described in the Annex will be exercised. RoHS 5/6 compliant components will have unique part numbers as reflected in the associated hardware and installation manuals.

WEEE - All products shipped to European Union member countries comply with the EU Directive 2002/96/EC, Waste Electronic and Electrical Equipment. All components that are WEEE compliant will be appropriately marked. For more information regarding Tekelec's WEEE program, contact your sales representative.

Patents
This product is covered by one or more of the following U.S. and foreign patents:

U.S. Patent Numbers:

5,008,929, 5,953,404, 6,167,129, 6,324,183, 6,327,350, 6,456,845, 6,606,379, 6,639,981, 6,647,113, 6,662,017, 6,735,441, 6,745,041, 6,765,990, 6,795,546, 6,819,932, 6,836,477, 6,839,423, 6,885,872, 6,901,262, 6,914,973, 6,940,866, 6,944,184, 6,954,526, 6,954,794, 6,959,076, 6,965,592, 6,967,956, 6,968,048, 6,970,542

Ordering Information
For additional copies of this document, contact your sales representative.

Table of Contents

List of Figures

List of Tables

1

Introduction

Overview

This manual provides a description, along with commands, maintenance, measurements, and configuration details associated with the ANSI-41 Mobile Number Portability (A-Port) feature of the EAGLE 5 ISS (Integrated Signaling System). A-Port provides IS41 number portability functionality using a triggerless solution. In response to governmental mandates for telecommunication networks, this feature focuses on service provider number portability on IS41 networks.

A-Port minimizes the challenges for IS41 network operators while enabling them to meet their regulatory obligations. A-Port supports the Signaling Relay Function (SRF) for direct and indirect routing. SRF-based MNP processing examines MAP messages for ported numbers. For call-related messages, A-Port acts as an "NP HLR" for exported number by responding with a MAP SRI message; A-Port performs a message relay function for calls to imported numbers and non-call related messages.

A-Port is an optional feature on the EAGLE 5 ISS, and can be enabled and turned on, but not off, via a feature access key. Note that A-Port requires the Global Title Translation (GTT) feature and that A-Port and North American LNP (Local Number Portability) are mutually exclusive on an EAGLE 5 ISS node.

Scope and Audience

This manual is intended for anyone responsible for installing, maintaining, and using the A-Port feature in the EAGLE 5 ISS. Users of this manual and the others in the EAGLE 5 ISS family of documents must have a working knowledge of telecommunications and network installations.

Manual Organization

This document is organized into the following chapters:

- Chapter 1, "Introduction" , contains general information about the A-Port documentation, the organization of this manual, and how to get technical assistance.
- Chapter 2, "Feature Description", provides a functional description of the A-Port feature, including network perspectives, assumptions and limitations, a database overview, DSM provisioning and reloading, A-Port user interface, and an audit overview.
- Chapter 3, "EAGLE 5 ISS A-Port Commands", describes the new or updated commands that support the A-Port feature. It provides some sample reports and explanations of appropriate comand usage.
- Chapter 4, "A-Port Feature Activation", describes how to activate the A-Port feature.
- Chapter 5, "Maintenance and Measurements", describes maintenance and measurements in detail, including EPAP status and alarms, hardware verification messages, TSM emulation mode, A-Port system status reports and commands, code and application data loading, and alarms.

Related Publications

The *A-Port Feature Manual* is part of the EAGLE 5 ISS documentation and may refer to one or more of the following manuals:

- The *Commands Manual* contains procedures for logging into or out of the EAGLE 5 ISS, a general description of the terminals, printers, the disk drive used on the system, and a description of all the commands used in the system.
- The *Commands Pocket Guide* is an abridged version of the *Commands Manual*. It contains all commands and parameters, and it shows the command-parameter syntax.
- The *Commands Quick Reference Guide* contains an alphabetical listing of the commands and parameters. The guide is sized to fit a shirt-pocket.
- The *Commands Error Recovery Manual* contains the procedures to resolve error message conditions generated by the commands in the *Commands Manual*. These error messages are presented in numerical order.
- The *Database Administration Manual – Features* contains procedural information required to configure the EAGLE 5 ISS to implement these features:
  - X.25 Gateway
  - STP LAN
  - Database Transport Access
  - GSM MAP Screening
  - EAGLE 5 ISS Support for Integrated Sentinel
- The *Database Administration Manual - Gateway Screening* contains a description of the Gateway Screening (GWS) feature and the procedures necessary to configure the EAGLE 5 ISS to implement this feature.
- The *Database Administration Manual – Global Title Translation* contains procedural information required to configure an EAGLE 5 ISS to implement these features:
  - Global Title Translation
  - Enhanced Global Title Translation
  - Variable Length Global Title Translation
  - Interim Global Title Modification
  - Intermediate GTT Load Sharing
  - ANSI-ITU-China SCCP Conversion
- The *Database Administration Manual - IP7 Secure Gateway* contains procedural information required to configure the EAGLE 5 ISS to implement the SS7-IP Gateway.

- The *Database Administration Manual – SEAS* contains the EAGLE 5 ISS configuration procedures that can be performed from the Signaling Engineering and Administration Center (SEAC) or a Signaling Network Control Center (SNCC). Each procedure includes a brief description of the procedure, a flowchart showing the steps required, a list of any EAGLE 5 ISS commands that may be required for the procedure but that are not supported by SEAS, and a reference to optional procedure-related information, which can be found in one of these manuals:
  - Database Administration Manual – Gateway Screening
  - Database Administration Manual – Global Title Translation
  - Database Administration Manual – SS7
- The *Database Administration Manual – SS7* contains procedural information required to configure an EAGLE 5 ISS to implement the SS7 protocol.
- The *Database Administration Manual – System Management* contains procedural information required to manage the EAGLE 5 ISS database and GPLs, and to configure basic system requirements such as user names and passwords, system-wide security requirements, and terminal configurations.
- The *Dimensioning Guide for EPAP Advanced DB Features* is used to provide EPAP planning and dimensioning information. This manual is used by Tekelec personnel and EAGLE 5 ISS customers to aid in the sale, planning, implementation, deployment, and upgrade of EAGLE 5 ISS systems equipped with one of the EAGLE 5 ISS EPAP Advanced Database (EADB) Features.
- The *ELAP Administration Manual* defines the user interface to the EAGLE LNP Application Processor (ELAP) on the MPS/ELAP platform. The manual defines the methods for accessing the user interface, menus, screens available to the user and describes their impact. It provides the syntax and semantics of user input, and defines the output the user receives, including information and error messages, alarms, and status.
- The *EPAP Administration Manual* describes how to administer the EAGLE Provisioning Application Processor (EPAP) on the MPS/EPAP platform. The manual defines the methods for accessing the user interface, menus, and screens available to the user and describes their impact. It provides the syntax and semantics of user input and defines the output the user receives, including messages, alarms, and status.
- The *Feature Manual - EIR* provides instructions and information on how to install, use, and maintain the Equipmet Identity Register (EIR) feature on the Multi-Purpose Server (MPS) platform of the EAGLE 5 ISS. The feature provides network operators with the capability to prevent stolen or disallowed GSM mobile handsets from accessing the network.
- The *Feature Manual - G-Flex C7 Relay* provides an overview of a feature supporting the efficient management of Home Location Registers in various networks. This manual gives the instructions and information on how to install, use, and maintain the G-Flex feature on the Multi-Purpose Server (MPS) platform of the EAGLE 5 ISS.

- The *Feature Manual - A-Port* provides an overview of a feature providing the capability for IS41 mobile subscribers to change service provider while retaining their original Mobile Directory Number (MDN). This manual gives the instructions and information on how to install, use, and maintain the A-Port feature on the Multi-Purpose Server (MPS) platform of the EAGLE 5 ISS.
- The *Feature Manual - G-Port* provides an overview of a feature providing the capability for mobile subscribers to change the GSM subscription network within a portability cluster while retaining their original MSISDNs. This manual gives the instructions and information on how to install, use, and maintain the G-Port feature on the Multi-Purpose Server (MPS) platform of the EAGLE 5 ISS.
- The *Feature Manual - INP* provides the user with information and instructions on how to implement, utilize, and maintain the INAP-based Number Portability (INP) feature on the Multi-Purpose Server (MPS) platform of the EAGLE 5 ISS.
- The *Feature Manual - Migration* provides an overview of a feature providing the capability for IS41 subscribers to migrate to a GSM network and GSM mobile subscribers to migrate to an IS41 network. This manual gives the instructions and information on how to install, use, and maintain the Migration feature on the Multi-Purpose Server (MPS) platform of the EAGLE 5 ISS.
- The *FTP-Based Table Retrieve Application (FTRA) User Guide* describes how to set up and use a PC to serve as the offline application for the EAGLE 5 ISS FTP Retrieve and Replace feature.
- The *Hardware Manual* - EAGLE 5 ISS contains hardware descriptions and specifications of Tekelec's signaling products. These include the EAGLE 5 ISS, OEM-based products such as the ASi 4000 Service Control Point (SCP), the Netra-based Multi-Purpose Server (MPS), and the Integrated Sentinel with Extended Services Platform (ESP) subassembly.

  The Hardware Manual provides an overview of each system and its subsystems, details of standard and optional hardware components in each system, and basic site engineering. Refer to this manual to obtain a basic understanding of each type of system and its related hardware, to locate detailed information about hardware components used in a particular release, and to help configure a site for use with the system hardware.
- The *Hardware Manual - Tekelec 1000 Application Server* provides general specifications and a description of the Tekelec 1000 Applications Server (T1000 AS). This manual also includes site preparation, environmental and other requirements, procedures to physically install the T1000 AS, and troubleshooting and repair of Field Replaceable Units (FRUs).

- The *Hardware Manual - Tekelec 1100 Application Server* provides general specifications and a description of the Tekelec 1100 Applications Server (T1000 AS). This manual also includes site preparation, environmental and other requirements, procedures to physically install the T1100 AS, and troubleshooting and repair of Field Replaceable Units (FRUs).
- The *Installation Manual* - EAGLE 5 ISS contains cabling requirements, schematics, and procedures for installing the EAGLE 5 ISS along with LEDs, Connectors, Cables, and Power Cords to Peripherals. Refer to this manual to install components or the complete systems.
- The *Installation Manual - Integrated Applications* provides the installation information for integrated applications such as EPAP 4.0 or earlier (Netra-based Multi-Purpose Server (MPS) platform) and Sentinel. The manual includes information about frame floors and shelves, LEDs, connectors, cables, and power cords to peripherals. Refer to this manual to install components or the complete systems.
- The *LNP Database Synchronization Manual - LSMS with* EAGLE 5 ISS describes how to keep the LNP databases at the LSMS and at the network element (the EAGLE 5 ISS is a network element) synchronized through the use of resynchronization, audits and reconciles, and bulk loads. This manual is contained in both the LSMS documentation set and in the EAGLE 5 ISS documentation set.
- The *LNP Feature Activation Guide* contains procedural information required to configure the EAGLE 5 ISS for the LNP feature and to implement these parts of the LNP feature on the EAGLE 5 ISS:
  - LNP services
  - LNP options
  - LNP subsystem application
  - Automatic call gapping
  - Triggerless LNP feature
  - Increasing the LRN and NPANXX Quantities on the EAGLE 5 ISS
  - Activating and Deactivating the LNP Short Message Service (SMS) feature
- The *Maintenance Manual* contains procedural information required for maintaining the EAGLE 5 ISS and the card removal and replacement procedures. The *Maintenance Manual* provides preventive and corrective maintenance procedures used in maintaining the different systems.
- The *Maintenance Pocket Guide* is an abridged version of the Maintenance Manual and contains all the corrective maintenance procedures used in maintaining the EAGLE 5 ISS.
- The *Maintenance Emergency Recovery Pocket Guide* is an abridged version of the Maintenance Manual and contains the corrective maintenance procedures for critical and major alarms generated on the EAGLE 5 ISS.

- The *MPS Platform Software and Maintenance Manual* - EAGLE 5 ISS *with Tekelec 1000 Application Server* describes the platform software for the Multi-Purpose Server (MPS) based on the Tekelec 1000 Application Server (T1000 AS) and describes how to perform preventive and corrective maintenance for the T1000 AS-based MPS. This manual should be used with the EPAP-based applications (EIR, G-Port, G-Flex, A-Port, Migration, and INP).
- The *MPS Platform Software and Maintenance Manual* - EAGLE 5 ISS *with Tekelec 1100 Application Server* describes the platform software for the Multi-Purpose Server (MPS) based on the Tekelec 1100 Application Server (T1100 AS) and describes how to perform preventive and corrective maintenance for the T1100 AS-based MPS. This manual should be used with the ELAP-based application (LNP).
- The *Provisioning Database Interface Manual* defines the programming interface that populates the Provisioning Database (PDB) for the EAGLE 5 ISS features supported on the MPS/EPAP platform. The manual defines the provisioning messages, usage rules, and informational and error messages of the interface. The customer uses the PDBI interface information to write his own client application to communicate with the MPS/EPAP platform.
- The *Previously Released Features Manual* summarizes the features of previous EAGLE, EAGLE 5 ISS, and IP^7 Secure Gateway releases, and it identifies the release number of their introduction.
- The *Release Documentation* contains the following documents for a specific release of the system:
  - *Feature Notice* - Describes the features contained in the specified release. The Feature Notice also provides the hardware baseline for the specified release, describes the customer documentation set, provides information about customer training, and explains how to access the Customer Support website.
  - *Release Notice* - Describes the changes made to the system during the lifecycle of a release. The Release Notice includes Generic Program Loads (GPLs), a list of PRs resolved in a build, and all known PRs.

    NOTE: The *Release Notice* is maintained solely on Tekelec's Customer Support site to provide you with instant access to the most up-to-date release information.
  - *System Overview* - Provides high-level information on SS7, the IP7 Secure Gateway, system architecture, LNP, and EOAP.

— *Master Glossary* - Contains an alphabetical listing of terms, acronyms, and abbreviations relevant to the system.

— *Master Index* - Lists all index entries used throughout the documentation set.

- The *System Manual – EOAP* describes the Embedded Operations Support System Application Processor (EOAP) and provides the user with procedures on how to implement the EOAP, replace EOAP-related hardware, device testing, and basic troubleshooting information.

Documentation Packaging, Delivery, and Updates

Customer documentation is provided with each system in accordance with the contract agreements. It is updated whenever significant changes that affect system operation or configuration are made. Updates may be issued as an addendum, or a reissue of the affected documentation.

The document part number appears on the title page along with the current revision of the document, the date of publication, and the software release that the document covers. The bottom of each page contains the document part number and date of publication.

Two types of releases are major software releases and maintenance releases. Maintenance releases are issued as addenda with a title page and change bars. On changed pages, the date and document part number are changed; on unchanged pages that accompany the changed pages, the date and document part number are unchanged.

When the software release has a minimum affect on documentation, an addendum is provided. The addendum contains an instruction page, a new title page, a change history page, and replacement chapters with the date of publication, the document part number, and change bars.

If a new release has a major impact on documentation, such as a new feature, the entire documentation set is reissued with a new part number and a new release number.

Documentation Admonishments

Admonishments are icons and text throughout this manual that alert the reader toassure personal safety, to minimize possible service interruptions, and to warn of the potential for equipment damage. This manual has three admonishments, listed in descending order of priority.

DANGER: This icon and text indicate the possibility of *personal injury*.

WARNING: This icon and text indicate the possibility of *equipment damage*.

CAUTION: This icon and text indicate the possibility of *service interruption*.

Customer Assistance

The Tekelec Customer Care Center offers a point of contact through which customers can receive support for problems. The Tekelec Customer Care Center is staffed with highly-trained engineers to provide solutions to technical questions and issues seven days a week, twenty-four hours a day. A variety of service programs are available through the Tekelec Customer Care Center to maximize the performance of Tekelec products that meet and exceed customer needs.

Customer Care Center

To receive technical assistance, call the Tekelec Customer Care Center at one of these locations:

To receive technical assistance, call the Tekelec Customer Care Center at one of the following locations by one of the following methods:

- Tekelec, UK

  Phone:+44 1784 467804

  Fax: +44 1784 477120

  Email:ecsc@tekelec.com

- Tekelec, USA

  Phone(within continental US):(888) 367-8552

  (outside continental US): +1 919-460-2150

  Email:support@tekelec.com

When the call is received, a Customer Service Report (CSR) is issued to record the request for service. Each CSR includes an individual tracking number.

Once a CSR is issued, Technical Services determines the classification of the trouble. If a critical problem exists, emergency procedures are initiated. If the problem is not critical, information regarding the serial number of the system, COMMON Language Location Identifier (CLLI), initial problem symptoms (includes outputs and messages) is recorded. A primary Technical Services engineer is also assigned to work on the CSR and provide a solution to the problem. The CSR is closed when the problem is resolved.

Emergency Response

In the event of a critical service situation, emergency response is offered by Tekelec Technical Services twenty-four hours a day, seven days a week. The emergency response provides immediate coverage, automatic escalation, and other features to ensure that the critical situation is resolved as rapidly as possible.

A critical situation is defined as a problem with an EAGLE 5 ISS that severely affects service, traffic, or maintenance capabilities, and requires immediate corrective action. Critical problems affect service and/or system operation resulting in:

- A total system failure that results in loss of all transaction processing capability
- Significant reduction in system capacity or traffic handling capability
- Loss of the system's ability to perform automatic system reconfiguration
- Inability to restart a processor or the system
- Corruption of system databases that requires service affecting corrective actions
- Loss of access for maintenance or recovery operations
- Loss of the system ability to provide any required critical or major trouble notification

Any other problem severely affecting service, capacity/traffic, billing, and maintenance capabilities may be defined as critical by prior discussion and agreement with Tekelec Technical Services.

Acronyms

ADL	Application Data Loader
A-Port	IS41 Mobile Number Portability
AuC	Authentication Center
CC	E.164 Country Code
CCRNDN	Country Code + Routing Number + National Directory Number
CdPA	Called Party Address
CgPA	Calling Party Address
CPC	Capability Point Code
CRP	Circular Route Prevention
DCB	Device Control Block
DCM	Data Communications Module

DSM	Database Services Module
EIR	Equipment Identity Register
EPAP	EAGLE Provisioning Application Processor
ES	Encoding Scheme
ETSI	European Telecommunications Standards Institution
FTP	File Transport Protocol
FTR	File Transfer Region
GDB	G-Flex/G-Port/INP Database
GFDB	G-Flex Database
G-Flex	GSM Flexible Numbering
GMSC	Gateway Mobile Switching Center
G-Port	GSM Mobile Number Portability
GPL	Generic Program Load
GSM	Global System for Mobile communications
GTA	Global Title Address
GTAI	Global Title Address Information
GTI	Global Title Indicator
GTT	Global Title Translation
HLR	Home Location Register
HomeRN	Home Network Routing Number Prefix
IAM	Initial Address Message
IMEI	International Mobile Equipment Identity
IMSI	International Mobile Station Identifier
IN	Intelligent Network
INAP	Intelligent Network Application Protocol
INP	INAP-Based Number Portability
IP	Internet Protocol
IS-41	International Standard 41, same as ANSI-41
ISDN	Integrated Services Digital Network
ITU	International Telecommunications Union
LIM	Link Interface Module
LNP	Local Number Portability
LSS	Local Subsystem

MAP	(1) Mobile Application Part (2) Mated APplication
MAS	Maintenance and Administration Subsystem
MCAP	MAS Communication Application Processor Card
MEA	Mismatch of Equipment and Attributes
MDN	Mobile Directory Number
MGT	Mobile Global Title
MIN	Mobile Identification Number
MMI	Man-Machine Interface
MNP	Mobile Number Portability
MPS	Multi-Purpose Server (Multi-Platform Server)
MS	Mobile Station
MSRN	Mobile Station Roaming Number
MSC	Mobile Switching Center
MSISDN	Mobile Station international ISDN number
MSU	Message Signaling Unit
MTP	Message Transfer Part
NC	E.214 Network Code
NDC	E.164 National Destination Code
NP	(1) Number Portability (2) Numbering Plan
NPA	Numbering Plan Area
NPDB	Number Portability Database
NPV	Numbering Plan Value
NSD	Network Systems Division, Tekelec
OAI	Object Access Interface
OAM	Operation Administration & Maintenance
OAP	Operations Support System/ Application Processor
OPS	Operator Provisioning System
PDB	Provisioning Database
PDBA	Provisioning Database Application
PDBI	Provisioning Database Interface
PFS	Product Functional Specification
PLMN	Public Land Mobile Network

PMTC	Peripheral Maintenance Control
RMTP	Reliable Multicast Transport Protocol
RNIDN	Routing Number prefix + International dialed / Directory Number
RNNDN	Routing Number prefix + National dialed / Directory Number
RNSDN	Routing Number prefix + Subscriber dialed / Directory Number
RTDB	Real-Time Database
SCCP	Signaling Connection Control Part
SCMG	SCCP Management
SCP	Service Control Point
SDS	System Debug Services
SIM	Subscriber Identity Module
SMS	(1) Service Management System, or (2) Short Message Service
SNP	Service Numbering Plan
SP	Signaling Point
SPC	Secondary Point Code
SRF	Signaling Relay Function
SRI	Send Routing Information
SS7	Signaling System 7
SSH	Secure Shell
SSN	Subsystem Number
SSP	Service Switching Point
STP	Signal Transfer Point
TCAP	Transaction Capabilities Application Part
TCP	Transmission Control Protocol
TFA	Transfer Allowed
TFP	Transfer Prohibited
TSM	Translation Service Module
TT	Translation Type
UAM	Unsolicited Alarm Message
UDP	User Datagram Protocol
UDT	Unit Data Transfer
UDTS	Unit Data Transfer Service

UIM	Unsolicited Information Message
UPU	User Part Unavailable
VLR	Visitor Location Register
VMSC	Voice Mail Service Center
VSCCP	VxWorks Signaling Connection Control Part

2

Feature Description

Introduction

Throughout the world, an increasing number of governments are mandating that telecommunications network operators support service provider number portability. It is primarily intended to promote competition among service providers. It applies to both wireline and mobile phone networks. In particular, the A-Port (IS41 Mobile Number Portability) feature provides the ability for IS41 subscribers to change service providers while retaining their current Mobile Directory Number (MDN).

A-Port provides the ability for IS41 subscribers to change service providers while retaining their Mobile Directory Number (MDN).

A-Port utilizes the EPAP database to derive the portability status of a subscriber. This feature supports LOCREQ messages as well as SMSREQ messages (if the option is selected) for number portability handling. LOCREQ messages generate a LOCREQ response if the MDN is ported and also relays the LOCREQ if the MDN is not ported (non-ported or ported in are handled the same way).

If the MTP Msgs for SCCP Apps feature is turned ON, all MTP routed UDT/non-segmented XUDT SCCP messages are routed to SCCP cards. SCCP card then perform SCCP decode/verification on MTP routed messages. If the MTP routed messages have CDPA GTI = 0, and the A-Port feature is turned ON, then the message is sent for A-Port processing. If the MTP routed messages have CDPA GTI ≠ 0, then SRVSEL lookup is performed using the SCCP CDPA information. If the result of the lookup is MNP service, the MTP routed messages are sent to MNP handling. MNP begins A-Port general TCAP/MAP verification if the message is ANSI TCAP and A-Port feature is turned ON.

The MNP Circular Route Prevention (MNP CRP) feature is an extension of the A-Port feature which helps in cases of circular routing caused by incorrect information in one or more of the network number portability databases. For example, a subscriber may have ported from network A to network B. Network A has the correct routing information, indicating the subscriber now belongs to network B. However, network B may have incorrect routing information, indicating that the subscriber still belongs to network A. In this case, network A routes the call to network B, based on its portability data, but network B routes the call back to network A, based on its incorrect data. This results in a circular route. The MNP CRP feature provides the logic to prevent this scenario. This feature is enabled and turned-on using Feature Access Key (FAK) commands.

The DigitAction Expansion feature provides more flexibility to formulate the SCCP Called Party Address (SCCP) Global Title Address (GTA) field of the MAP messages relayed by A-Port.

DigitAction Expansion is provisioned via the PDBI Enter Network Entity or Update Network Entity commands. DigitAction Expansion can also be modified via the Add an NE and Update an NE GUI screens.

The MNP SCCP Service Re-Route feature is used when the A-Port subscriber database is incoherent with MPS data and the GTT data is valid. The A-Port SCCP Service Re-Route feature provides the capability to re-route the traffic from the EAGLE 5 ISS to other A-Port subscriber database nodes and inform the originating nodes to re-route the A-Port service related traffic to other A-Port service nodes.

The MNP SCCP Service Re-Route feature is designed to handle and control re-routing of A-Port traffic from an affected node to alternate nodes within an operators network. This feature is an optional feature and doesn't affect the normal A-Port functionality. This feature also provides the option to mark A-Port *OFFLINE* to perform a controlled re-routing during this state.

Standards are defined so that carriers can choose to implement either Signaling Relay Function (SRF)-based (using MAP protocol) MNP or IN-based (using INAP protocol) MNP. A-Port supports only the SRF-based solution for MNP. (INAP-based MNP processing is similar to wireline networks; this function is supported by the INP feature.)

SRF-based MNP processing involves the "intercepting" of existing MAP messages to check for ported numbers. For call-related messages, A-Port acts as a "NP HLR," in the case where the number has been exported, by responding to the switch with a Loc_req ack message. For calls to imported numbers and non-call related messages, A-Port performs message relay.

The ETSI standards for SRF-based MNP define two routing options, direct routing and indirect routing. A-Port supports both options:

- With direct routing, the network where the call is originated is responsible for determining whether the called party has ported and routing the call to the new subscription network.
- With indirect routing, this is the responsibility of the network that originally owned the number.

A-Port MNP is based on the EAGLE 5 ISS platform. It is deployed in a node that is also performing the STP function.

Number lengths vary between countries and may even vary within a country. As a result, the A-Port subscriber database structure supports numbers of varying length in a flexible way without necessitating software modifications. A maximum number length of 15 digits for ported numbers is supported.

A-Port Considerations

1. GTT must be ON before the A-Port feature can be enabled.
2. The A-Port feature cannot be enabled if any TSMs are in the system.
3. The A-Port feature requires 4 GB DSMs.
4. A-Port is activated or turned on, but not off, via a feature access key (FAK).
5. The A-Port, IGM, G-Port MNP, G-Flex C7 Relay, AINPQ, and INP features can run concurrently on an EAGLE 5 ISS node.
6. When A-Port and G-Flex are run on the same node, interactions between the two features must be addressed.
7. A-Port and North American LNP are mutually exclusive on an EAGLE 5 ISS node.

MPS/EPAP Platform

Tekelec provides the MPS (Multi-Purpose Server) platform as a subsystem of the EAGLE 5 ISS. The MPS provides support for multiple features, which currently are the AINPQ, INP, G-Flex, G-Port, A-Port, IGM, and EIR features.

The MPS is composed of hardware and software components that interact to create a secure and reliable platform. (For details about the MPS hardware, refer to the MPS Hardware Manual.) The MPS provides the means of interfacing the customer provisioning application with the EAGLE 5 ISS. It connects the customer with the EAGLE 5 ISS and accepts the customer number portability data, while accommodating numbers of varying lengths (international format).

The EAGLE Provisioning Application Processor (EPAP) is the software that runs on the MPS hardware platform. It collects and organizes customer provisoning data, and forwards it to the EAGLE 5 ISS DSM cards. Figure 2-1 shows the overall system architecture, providing a graphic overview of MPS/EPAP platform from customer provisioning through the MPS subsystem to the EAGLE 5 ISS DSM databases.

Figure 2-1. MPS/EPAP Platforms for Provisioning A-Port

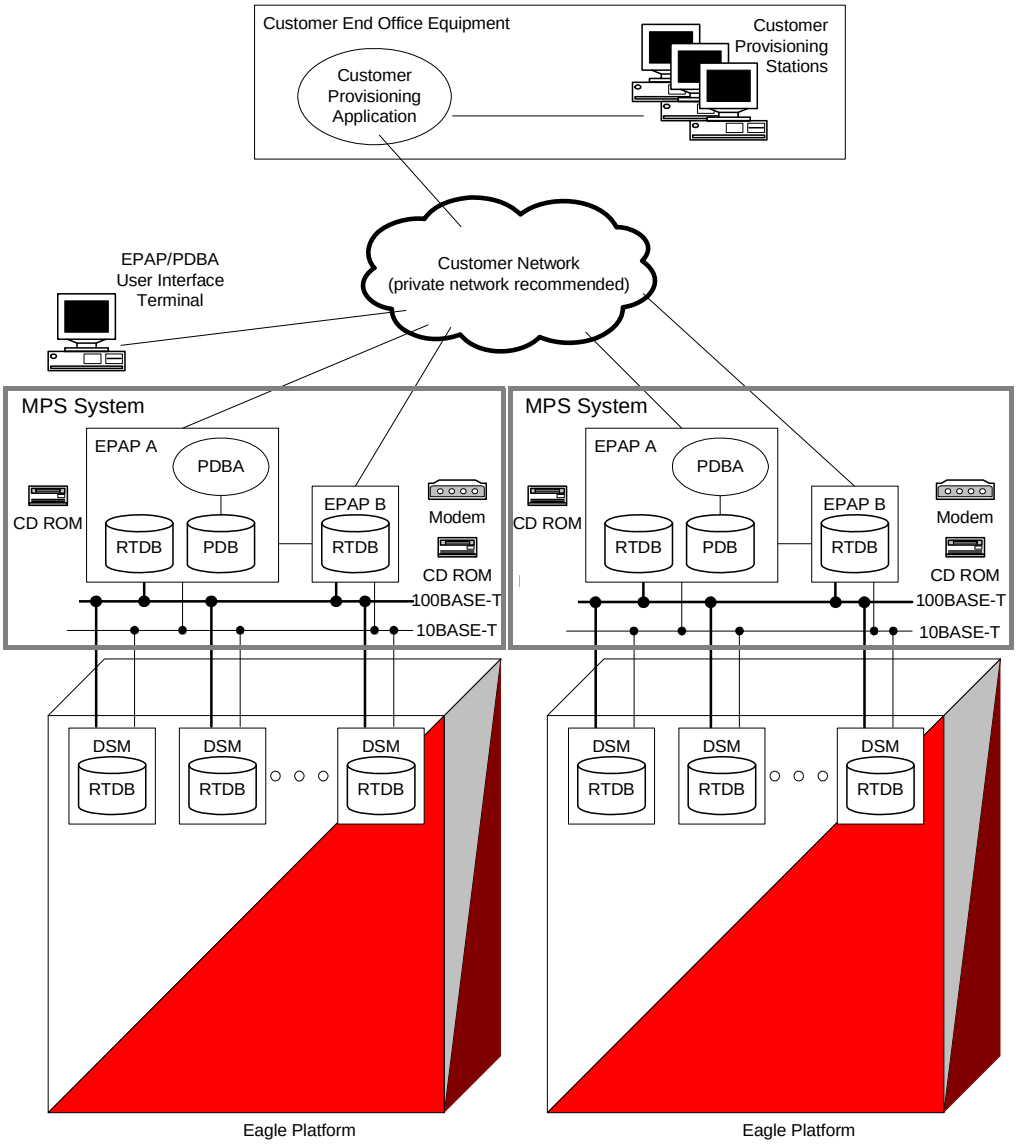

Design Overview and System Layout

Figure 2-1 illustrates the overall system architecture of A-Port and identifies the different tasks, databases and interfaces involved. The system consists of two mated MPS servers. Each MPS contains two EPAP platforms, EPAP A and EPAP B, a RealTime Database, a Provisioning Database, servers, CD ROMS, modems, and network hubs. Each MPS and its EPAPs may be thought of as an 'EPAP system'; the EPAP system at the mated EAGLE 5 ISS is referred to as the 'mated EPAP system'. Each EPAP system is a T1000 AS system with a total of four Ethernet interfaces.

On the EAGLE 5 ISS platform side, a set of DSMs, which hold the A-Port subscriber database, is part of the STP. Two high-speed Ethernet links connect the DSMs and the EPAPs. One of the links is a 100BASE-T Ethernet bus, and the other is a 10BASE-T Ethernet bus.

The A-Port subscriber database is provisioned and maintained through the EPAPs. EPAP A and EPAP B act as the active EPAP and the standby EPAP. One link serves as the active link, and the other as the standby link. At any given time, there is only one active EPAP and one active link. The database is provisioned through the active link by the active EPAP; the other EPAP provides redundancy.

In case of failure of the active EPAP, the standby EPAP takes over the role of active EPAP and continues to provision the A-Port subscriber database. In the case where the active link fails, the active EPAP switches to the standby link to continue provisioning the DSMs. The two Ethernet links are part of the DSM network.

Another 100BASE-T Ethernet link exists between the EPAPs; that link is called the EPAP sync network.

Major modules on the EPAP are the:

- DSM provisioning module
- Maintenance module
- RTDB module
- PDB module

The DSM provisioning module is responsible for updating A-Port subscriber databases on the EAGLE 5 ISS DSM cards using the RMTP multicast. The maintenance module is responsible for the proper functioning of the EPAP platform. The PDB module is responsible for preparing and maintaining the Real Time Database, which is the “golden copy” of the A-Port subscriber database. The PDB module can run on one of the EPAPs of either of the mated EAGLE 5 ISSs.

Functional Overview

The main function of the MPS/EPAP platform is to provision the A-Port data from the customer network to the DSM cards on the EAGLE 5 ISS. A-Port subscriber database records are continuously updated from the customer network to the PDB. The PDB module communicates with the maintenance module and the RTDB task over a TCP/IP socket to provision the DSM cards on the EAGLE 5 ISS. The maintenance module is responsible for the overall stability and performance of the system.

It is possible for the DSM database to get out-of-sync due to missed provisioning or card rebooting. Therefore, the RTDB contains a coherent, current copy of the DSM database. The EPAP-DSM provisioning task sends database information out on the provisioning link. The DSM cards act as the receivers and are reprovisioned.

EPAP/PDBA Overview

The EAGLE Provisioning Application Processor (EPAP) platform and the Provisioning Database Application (PDBA) coupled with the Provisioning Database Interface (PDBI) facilitate the user database required for the A-Port feature. It performs the following two basic functions in support of the A-Port feature:

- Accept and store A-Port data provisioned by the customer
- Update and reload A-Port subscriber databases on the DSM cards

The PDBA operates on the master A-Port provisioning database (PDB). The EPAP and PDBA are both installed on the MPS hardware platform.

The EPAP platform maintains an exact copy of the real-time database (RTDB) required by the EAGLE 5 ISS DSM cards, provisions the EAGLE 5 ISS DSM cards, and maintains redundant copies of both databases on mated EPAP hardware. The EPAP platform is a mated pair of processors (the upper processor, called EPAP A, and the lower processor, EPAP B) contained in one frame.

During normal operation, information flows through the EPAP/PDBA software with no intervention. A-Port data is generated at one or more operations centers and is delivered to the PDBA through a TCP socket interface (PDBI). The PDBA software stores and replicates data on EPAP A on the mated EPAP system. The data is then transmitted across a private network to the DSM cards located in the EAGLE 5 ISS frame by the EPAPs.

The primary interface to the PDBA consists of machine-to-machine messages. The interface is defined by Tekelec and is available in the Provisioning Database Interface Manual. Use that manual to update or create provisioning software compatible with the EPAP socket interface.

A direct user interface is provided on each EPAP to allow configuration, maintenance, debugging, and platform operations. A direct user interface is also provided by the PDBA for configuration and database maintenance.

The MPS/EPAP is an open systems platform and easily accommodates the high provisioning rates that A-Port requires. Implementing the persistent database and provisioning as an open systems platform, compared to the traditional OAM platform, provides these benefits:

- Variety of hardware components and vendors
- Availability of third party communication and database tools
- Standard communication protocols
- Availability of personnel with related experience

Each EPAP server maintains a copy of the real-time database in order to provision the EAGLE 5 ISS DSM cards. The EPAP server must comply with the hardware requirements in the *MPS Hardware Manual*. Figure 2-1 illustrates the EPAP architecture contained in the MPS subsystem.

Each EPAP has a dedicated CD ROM drive. One EPAP per EAGLE 5 ISS platform has a modem capable of supporting remote diagnostics, remote configuration, and remote maintenance; these remote operations are performed through EPAP login sessions. These sessions are accessible across the customer network (that is, the ssh) as well as through direct terminal connection to the EPAP via an RS232 connection. Refer to the *MPS Hardware Manual* for details about the hardware devices and network connections.

Subscriber Data Provisioning

"Subscriber Data Provisioning Architecture (High Level)" on page 2-8 shows the current high-level view of the subscriber data provisioning architecture that used for A-Port. Only those parts of the EAGLE 5 ISS platform that are relevant to subscriber data provisioning are shown. This section defines requirements for the PDBI (Provisioning Database Interface) between the A-Port and the operator's provisioning system (OPS).

Provisioning clients connect to the EPAPs via the Provisioning Database Interface (PDBI). This interface contains commands that allow all of the provisioning and retrieving of A-Port data. The PDBI is used only for real-time provisioning of subscriber and network entity data. Refer to the *Provisioning Database Interface Manual* for more details about the A-Port PDBI.

Figure 2-2. Subscriber Data Provisioning Architecture (High Level)

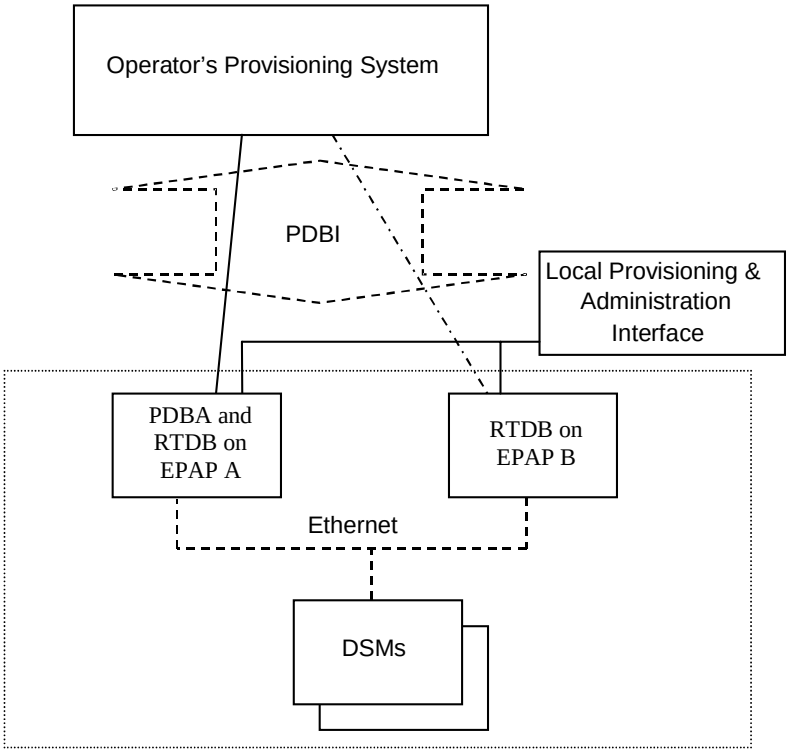

A pair of active/standby EPAP (EAGLE Provisioning Application Processors) servers provides the interface between the Realtime Database (RTDB) of the EAGLE 5 ISS DSM (Database Service Modules) cards and the OPS (Operator Provisioning System). EPAP A is equipped with both the PDB (Provisioning Database) and the RTDB database, and EPAP B has just the RTDB. An EPAP with just the RTDB must be updated by the EPAP that has the PDB. The EPAP uses the Multi-Purpose Server (MPS) hardware.

For more information about the EPAP, refer to the *EPAP Administration Manual*. For more information about the MPS hardware, refer to the *MPS Hardware Manual*.

Database Overview

This section describes, at a high level, the distributed administrative architecture for the EAGLE 5 ISS, which includes the A-Port administrative solution.

In general, STP database updates are sent via an EAGLE 5 ISS terminal across an RS232 serial port to the active OAM (Operation Administration and Maintenance). The active OAM commits the update to TDM fixed disk and then sends the update control information to the standby OAM and to the rest of the network cards. When all databases are updated, the active OAM responds with a *Command Completed* indication to the user terminal. STP database updates are generally considered to be EAGLE 5 ISS link, linkset, route, destination, mated application, gateway screening, and global title types of information.

Typically, large databases requiring much faster update and retrieval rates (compared to the rates provided by the OAM) are not administered via EAGLE 5 ISS terminals. These databases, such as A-Port, are populated using redundant Ethernet connections to DSM cards from an EPAP MPS platform.

An EPAP consists of a combined Provisioning database (MySQL) and RTDB database, as shown in Figure 2-1. The PDB responds to requests for updates by the active and standby RTDB databases on both mated EAGLE 5 ISSs. The active EPAP RTDB database is responsible for initiating multicast updates of changed database records to the DSM cards after the data has been committed to the EPAP disks. Furthermore, the PDB may accept and commit to more database updates while the RTDB databases are completing their previous updates

It is this overlapping of database updates, coupled with an RTDB transactional database engine and fast download time, that allows larger amounts of data at a time from the PDB. Committing larger amounts of data at a time to be committed in the RTDB (versus a single update at a time) results in achieving faster overall transaction rates. The boundaries of the transaction rates become more closely related to cache size and disk cache flush time than the disk access time of a single update. Thus, successful completion of EPAP database updates only guarantees that the PDB has been updated, but it does *not* mean the RTDB has already completed the update and sent it to the DSM card.

The EPAP architecture contains a local provisioning terminal and a modem for remote access, as well as other functions. A backup device can be used to backup or restore the Provisioning database. The local provisioning terminal is used to manually repair the standby EPAP RTDB database or to turn the A-Port subscriber database audit on or off. For additional information, refer to the *MPS Hardware Manual* and the *EPAP Administration Manual*.

EPAP (EAGLE Provisioning Application Processor)

As shown in Figure 2-1, a single A-Port system contains two EPAP (EAGLE Provisioning Application Processors) servers. At any given time, only one actively communicates with the DSM (Database Service Module) boards. The other EPAP server is in standby mode. In addition, two A-Port systems can be deployed in a mated pair configuration.

The primary purpose of the EPAP systems is to maintain the RTDB and PDB and to download copies of the RTDB to the DSM cards on the EAGLE 5 ISS.

The PDB on the active EPAP receives A-Port data from the customer network through the PDBI, the external source of A-Port provisioning information. The PDBA continually updates the active EPAP's PDB. (The PDB uses MySQL database software.) Once an update is applied to the active PDB, it is sent to the RTDBs on the active and standby EPAPs.

Both the active and standby EPAPs maintain copies of the RTDB. Periodically, the DSM card polls the active EPAP RTDB for any new updates. The active EPAP downloads the updates to the DSM for its own resident copy of the RTDB database.

In a mated pair configuration, there are mated EPAP servers that provide two A-Port platforms, as shown in Figure 2-1. The PDB on the active EPAP automatically updates the PDB on the mate platform. The PDB on the mate platform then updates its EPAP RTDBs, which in turn update the RTDBs on the DSM cards.

Provisioning of the EAGLE 5 ISS's DSM cards is performed through two interfaces, using two different sets of commands. Provisioning is accomplished by the STP updates from EAGLE 5 ISS terminals and by the A-Port updates from the customer's external provisioning system. This system of dual provisioning is illustrated in Figure 2-3.

Figure 2-3. Administrative Architecture

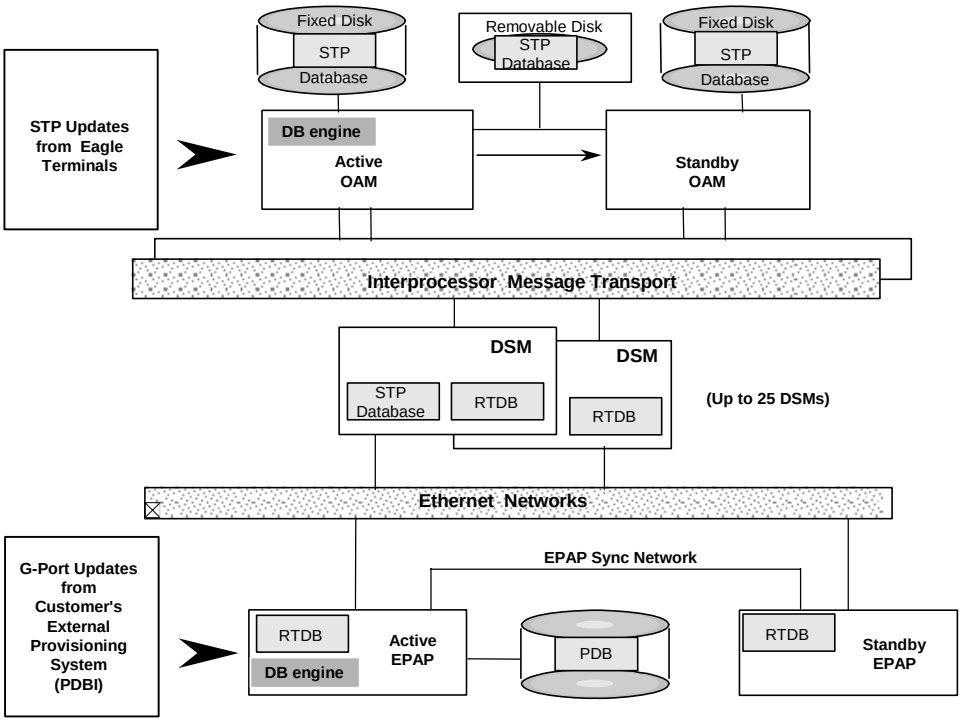

DSM (Database Service Module) Cards

From 1 to 25 DSM cards can be provisioned with the A-Port feature enabled.The A-Port feature requires that all DSMs cards contain 4 GB of memory. Figure 2-3 illustrates each DSM card having two Ethernet links, the main DSM network on the 100BASE-T link and the backup DSM network on the 10BASE-T link.

The extra memory holds a copy of the RTDB. The DSM Ethernet ports are linked to the EPAP systems to receive the downloaded RTDBs. The DSMs run a version of the SCCP software application that has been ported to the VxWorks OS. To differentiate the DSM-VxWorks-SCCP application from the SCCP that runs on TSM cards, the DSM version is named ‘VSCCP’.

Multiple DSMs provide a means of load balancing in high-traffic situations. The DSM database is in a format that facilitates rapid lookups. Each DSM contains an identical database. Furthermore, all DSM A-Port subscriber databases are identical to the RTDB maintained by the EPAPs.

However, the various databases may not be identical at all times for several reasons. First of all, when a DSM card is initialized, it downloads the current copy of the database from the EPAP. While that card is being loaded, it cannot receive new updates that have arrived at the EPAP since reload began. Another condition

that can result in databases being out-of-sync occurs when the EPAP receives updates from its provisioning source, but it has not yet sent them down to the DSM cards. Updates are applied to the provisioning database as they are received.

Two possible scenarios contribute to a condition where a DSM may not have enough memory to hold the entire database. In the first case, the database is downloaded successfully to the DSM, but subsequent updates eventually increase the size of the database beyond the capacity of the DSM memory. In this situation, it is desirable to continue processing A-Port transactions, even though the database may not be as up-to-date as it could be.

The other case occurs when a DSM card is booted. If it is determined then that the card does not have enough memory for the entire database, the database is not loaded on that card. Each DSM is responsible for recognizing and reporting its out-of-memory conditions by means of alarms.

Overview of EPAP to DSM Communications. Before discussing DSM status reporting or EPAP status reporting, it is helpful to understand the communications between the DSMs and the EPAP in broad terms.

- UDP - sending DSM status messages

  The DSMs and EPAPs create a UDP (User Datagram Protocol) socket, which is used for status messages. One of the last things a DSM does when it is initialized is to send a status message to the EPAP, containing the DSM ID, database level, and memory size. The EPAP maintains tables containing the last known status of each DSM. EPAP uses these to determine whether or not the DSM needs to download the database.

- IP - reporting EPAP maintenance data

  The DSMs create an TCP/IP socket when they are initialized, and listen for connection requests. During initialization or after a loss of connectivity, the active EPAP chooses one of the DSMs and issues a *Connect* to establish the TCP/IP connection with that DSM (referred to as the primary DSM). The purpose of this link is to provide a path for reporting EPAP alarms and to forward maintenance blocks to the DSM.

- IP Multicast - downloading GSM database

  Because of the large size of the database and the need to download it quickly on up to 25 DSM cards,A-Port uses a technique known as IP multicasting. This technique is based on Reliable Multicast Transport Protocol-II (RMTP-II), a product of Globalcast Communications. IP multicasting downloads the RTDB and database updates to the DSMs.

  The administration of IP multicasting is based on the concept of a “tree”, or stream of data, which is constantly being broadcast by the EPAP. DSMs that need to download the real time database or to receive database updates “join the tree”. DSMs can also “leave the tree”, typically when the database fills their available memory.

DSM Provisioning and Reload

One of the core functions of the EPAP is to provision the DSM cards with the A-Port subscriber database updates. In order to provide redundancy for this feature, separate RMTP channels are created on each interface from each EPAP:

- EPAP A, Link A (on the main DSM network, 100BASE-T)
- EPAP A, Link B (on the backup DSM network, 10BASE-T)
- EPAP B, Link A (on the main DSM network, 100BASE-T)
- EPAP B, Link B (on the backup DSM network, 10BASE-T)

Provisioning and other data is broadcast on one of these channels to all of the DSM cards. Provisioning is done by database level in order to leave DSM tables coherent between updates.

The DSM cards do the following:

- Detect the need for incremental updates and send a status message to the EPAP.
- Discriminate between the various streams by the database level contained in each message and accept updates according to the DSMs current database level.

DSM Reloading Model.

EPAP Continuous Reload

It is important to understand how the EPAP handles reloading of multiple DSMs from different starting points. Reload begins when the first DSM requires it. Records are read sequentially from the real-time database from an arbitrary starting point, wrapping back to the beginning. If another DSM requires reloading at this time, it uses the existing record stream and notifies the DSM provisioning task of the first record it read. This continues until all DSMs are satisfied.

DSM Database Levels and Reloading

The current database level when the reload started is of special importance during reload. When a DSM detects that the last record has been received, it sends a status message back to the EPAP indicating the database level at the start of reload. This action starts incremental loading. The DSM continues to reload until it is completely caught up with the current level of the RTDB. As database records are sent to the DSMs during reload, normal provisioning can *change* those records. All records changed between the start and end of reloading must be incrementally loaded before the database is coherent and usable by the DSM.

The following terminology is used here for the stages of database reload for a given DSM.

- **Stage 1 loading**: The database is being copied record for record from the golden RTDB to the DSM RTDB. The database is incoherent during stage 1 loading.
- **Incremental update**: The database is receiving all of the updates missed during stage 1 loading or some other reason (e.g., network outage, processor limitation, lost communication, etc.). The database is coherent but back level during incremental update.
- **Current**: The database is receiving current updates from the DSM provisioning task.
- **Coherent:** The database is at a whole database level, that is, not currently updating records belonging to a database level.

DSM Reload Requirements. DSM cards may require a complete database reload if there is a reboot or loss of connectivity for a significant amount of time. The EPAP provides a mechanism to quickly load a number of DSM cards with the current database. The RTDB on the EPAP is large and can be updated constantly from the customer's provisioning network.

The upload process is divided into two stages, one to sequentially send the initial database records and another to send any updates missed since the beginning of the first stage. The DSM reload stream uses a separate RMTP channel from the provisioning and incremental update streams. This allows DSM multicast hardware to filter out the high volume of reload traffic from DSM cards that do not require it.

DSM cards do the following:

- Detect the need for stage 1 loading and send a status message to the EPAP.
- Identify the first record DSM was able to read in the above status message if a record stream is already in progress.
- Handle the record stream regardless of the starting point (that is, records starting with the middle record of the middle table).
- Expect tables to be sent in a particular order and therefore detect any gap in the record stream.
- Send a status message if a gap is detected. Stage 1 loading is essentially reset to the last update received.
- Handle wrapping from the last record from the last table to the first record of the first table.o the last update received.
- Know when they have received all the required records to proceed to stage 2 loading.

- Send a status message when stage 1 loading is complete, indicating the database level at the beginning of stage 1.
- Detect when the master RTDB crosses a memory boundary during stage 1 loading; the card automatically reboots and then auto-inhibits.

EPAP Status and Error Reporting via Maintenance Blocks. The EPAPs forward all status and error messages to the DSMs in maintenance blocks. Maintenance blocks are asynchronously sent whenever the EPAP has something to report. The maintenance blocks eventually update EPAP device control blocks (DCBs) located on the EAGLE 5 ISS. The DCBs provide the status information you receive when you issue a **`rept-stat-mps`** command.

Network Connections

Several customer- and Tekelec-installed private networks are required to support the A-Port feature. These networks are:

- Customer provisioning network
- EPAP sync network
- DSM networks
- Dial-up network

The following discussion is an overview of these private networks. It expands on the networks in the A-Port architecture diagram shown in Figure 2-4. (For details about configuring these networks, refer to the *EPAP Administration Manual*.)

Customer Provisioning Network. The customer network carries the following traffic:

- Customer queries and responses to the PDB via the PDBI from the customer provisioning network
- Updates between PDBs if a mated EAGLE 5 ISS pair
- Updates between a PDB on one EAGLE 5 ISS and RTDBs on a mated EAGLE 5 ISS
- PDBA import/export (file transfer) traffic
- Traffic from a PDBA reloading from its mate
- EPAP and PDBA user interface traffic.

A typical customer network is shown in Figure 2-4.

Figure 2-4. Customer Provisioning Network

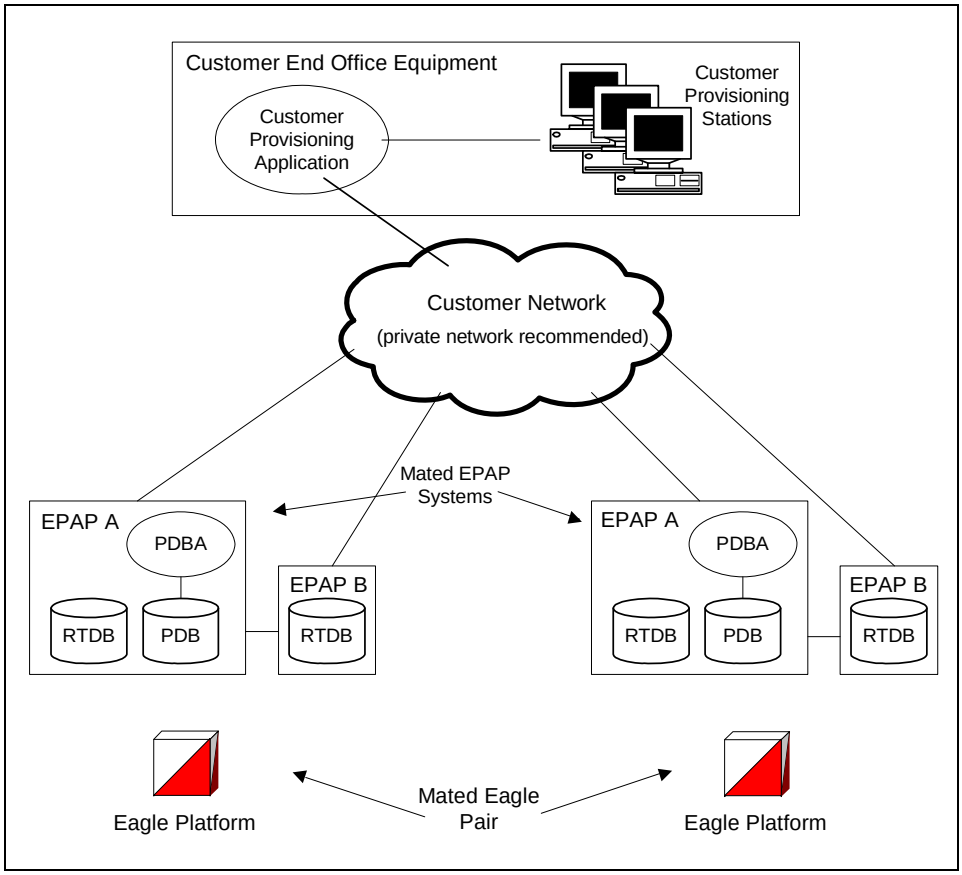

Although a dedicated network is recommended, it is possible that unrelated customer traffic can use the network as well. The determination, either to have a dedicated network or to allow other customer traffic, should be based on available external Ethernet bandwidth and network performance considerations.

EPAP Sync Network. The EPAP sync network carries RTDB and maintenance application traffic between active and standby EPAP servers on an EPAP system. It synchronizes the contents of the RTDBs of both EPAP A and B. The EPAP network is a single Ethernet cable between EPAP A and EPAP B running at 100BASE-T, as shown in Figure 2-5.

Figure 2-5. EPAP Sync Network

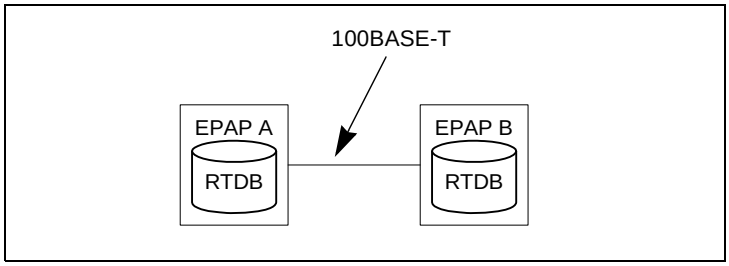

DSM Networks. The DSM networks are shown in Figure 2-6. They carry provisioning data from the Real Time Data Bases (RTDBs) from the active EPAP to the DSM cards. They also carry reload and maintenance traffic to the DSMs.

The DSM networks consist of two Ethernet networks, which are the main DSM network running at 100BASE-T and the backup DSM network running at 10BASE-T. Both Ethernet networks connect EPAP A and EPAP B with every DSM card on a single EAGLE 5 ISS platform.

Figure 2-6. Customer Provisioning Network

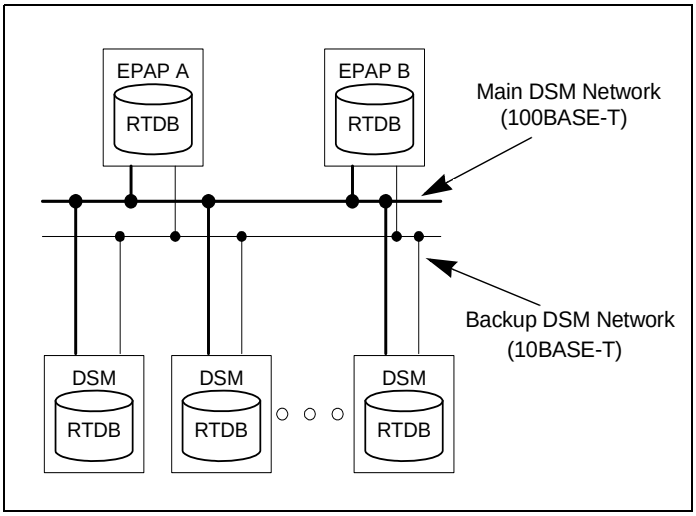

Maintenance information is sent from the active EPAP to an arbitrarily selected DSM card. The selected DSM is known as the primary DSM. Static information is exchanged across this interface at initialization, and dynamic information is exchanged on occasion.

While much of the traditional OAM provisioning and database functionality is implemented on the EPAP, the maintenance reporting mechanism is still the OAM.

The first and second octets of the EPAP network addresses for this network are 192.168. (The first two octets for private class C networks are defined in RFC 1597.)

The third octet is a customer specifiable for each DSM network. Be sure to select values that do not interfere with the customer's network addressing scheme.

The fourth octet of the address is specified as follows:

- If the EPAP is configured as “EPAP A”, the fourth octet has a value of 100.
- If the EPAP is configured as “EPAP B”, the fourth octet has a value of 200.

Table 2-1 summarizes the contents of each octet.

Table 2-1. EPAP IP Addresses in the DSM Network

Octet	Value
1	‘192’
2	‘168’
3	One customer-provisioned value for DSM network A, and another for DSM network B
4	‘100’ for EPAP A ‘200’ for EPAP B

Dial-Up PPP Network. The dial-up PPP network allows multiple user interface sessions to be established with the EPAP. The network connects a remote EPAP/PDBA user interface terminal with the EPAP in the EAGLE 5 ISS’s MPS subsystem. The dial-up PPP network is illustrated in Figure 2-7.

Figure 2-7. Dial-Up PPP Network

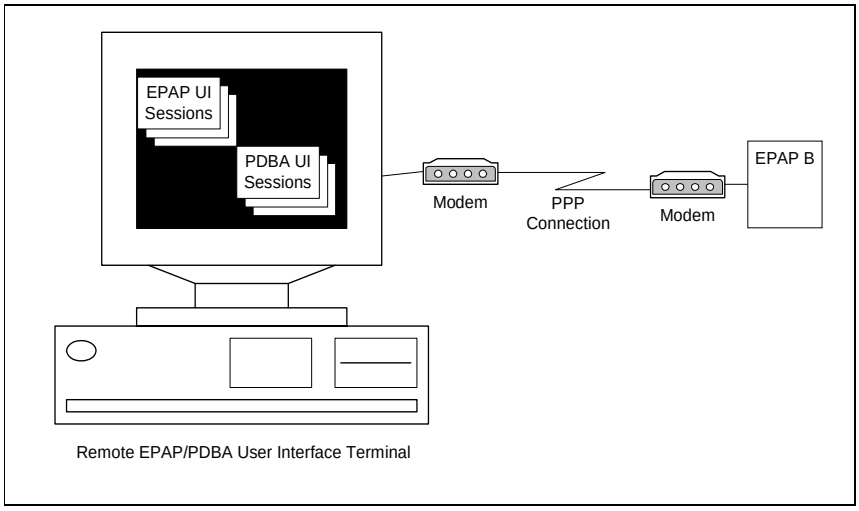

Serviceability Hints

Mated Application Considerations

An EPAP-administered entity data can possibly become out-of-sync with the EAGLE 5 ISS mated application table because the creation of entity point codes (and/or subsystem numbers) in the mated application table is not performed at database administration time.

If this mismatch is discovered at real time, a UIM message (such as “SCCP did not route - DPC not in MAP tbl” or “SCCP did not route - SS not in MAP tbl”) is sent to the EAGLE 5 ISS maintenance terminal. This message means the MSU was discarded.

For this reason, it is recommended that the entity (SP or RN) not be administered until the entity PC (and/or SSN) has been entered into the EAGLE 5 ISS mated application (MAP) table.

Entity Point Codes and Routes

Verification that an entity point code exists in the route table and has a route is not performed at database administration time. Therefore, it is possible for the EPAP entity data to be out-of-sync with the EAGLE 5 ISS route table.

If an out-of-sync condition is discovered at real time, a UIM is sent to the EAGLE 5 ISS maintenance terminal, indicating one of these conditions:

- Destination point code is not in the route table.
- Destination point code exists in the route table but is not assigned a route.
- Destination point code exists in the route table and has been assigned a route, but it is out of service.

A-Port Considerations

The following list contains considerations you should think over before installing and operating the A-Port feature.

1. SRI responses are routed by both MTP and Global Title Translation.
2. The maximum length of the Application Context Name Object Identifier is 32 digits.
3. For A-Port Message Relay messages with E.164 numbers in the SCCP CDPA, it is assumed that no truncation occurred if and when the routing number was prepended and that SCCP CDPA has the full DN of the subscriber.
4. A-Port Message Relay to the EAGLE 5 ISS local subsystem is not supported.
5. Only the first 21 digits of the CDPA are decoded for A-Port Message Relay. For example, if the CDPA contains an RN prefixed to a DN, the RN is seven digits,

and the DN is 15 digits, then the total is 22 digits, and the DN used for processing will be only 14 digits (21 total digits less 7 RN digits).

6. GTT currently handles decimal digits only. Thus, if an operator/country is using hexadecimal digits 'A' through 'F' in RNs and the operator is providing GTT to messages that have RN prefixes other than its own prefixes, the operator must enter the RN + DN number ranges as DN ranges in the A-Port subscriber database. The only problem with this is that the beginning and ending DNs can only be 15 digits, which may not be enough for an RN + DN.
7. As discussed in this document, MNP applies within a single portability cluster. This is defined as a set of networks in a country or multi-country region having a common numbering plan and across which a subscriber, who is already inside the cluster, can port. Any individual A-Port node is required to support only an MNP within such a portability cluster.
8. The routing number found in the NP database is either prefixed to the dialed number to form a new concatenated roaming number that is returned to the switch, or is sent on its own as the roaming number.
9. All non-call related messages impacted by MNP contain the MSISDN number in the SCCP CdPA. In the case of the SRI message, A-Port may get the number from the MAP leve.
10. TCAP operation codes uniquely distinguish Loc_req messages and do not change from one phase (or version) of MAP to another.
11. PCs and/or PC + SSNs that are in the entity table of the database and referenced by subscriber entries do not necessarily have the required data present on the EAGLE 5 ISS to route messages to them. For example, the point code may not have a route or the PC + SSN may not be in the MAP table for a final GTT. In this event, a UIM is output only when a message is discarded because of the lack of data.
12. The parameters of the SRI ACK message generated by A-Port are solely based on the provisioned data/options; they are not based on the MAP phase of the SRI message. For example, if the message received is phase 1 or 2, "MSRNDIG=RN", and the portability status is "NotKnowntobePorted", A-Port generates an SRI ACK contains IMSI, MSRN, MDN, and NPS parameters, despite the MDN and NPS parameters not being defined for phase 1 or 2.
13. If SRFIMSI is not provisioned with an RN entity and an incoming message is an SRI message, A-Port sets IMSI parameter as zero digits when the MAP phase is 1 or 2.
14. A-Port uses the MTP route for the SRI ACK response, even when the final GTT is performed on the response.
15. When the concatenated number (RN + MDN) option is selected for encoding the Routing Info (MSRN) in SRI ACK, A-Port encodes the complete concatenated number, because the concatenated number length may otherwise exceed 16 digits, which is the maximum allowed in MSRN.

General Requirements

Numbering

1. Incoming called party numbers (from the SCCP portion) destined for A-Port processing are conditioned to fit the GDB requirements where possible:
   - If the GTT selectors available in the incoming message match an entry in the A-Port selector table, then the service numbering plan from the selector table entry uses that number's numbering plan. Further conditioning is applied based on this new numbering plan.
   - If the GTT selectors available in the incoming message match an entry in the A-Port selector table, then the service nature of address from the selector table entry uses that number's nature of address. Further conditioning is applied based on this new nature of address.
   - If the nature of address is Subscriber, the default CC + default NC (network code for E.164) are prepended to the number. The default codes to be used by the EAGLE 5 ISS must be previously provisioned by the EAGLE 5 ISS operator. If not, a UIM is issued, and the message falls through to GTT.
2. Numbers with fewer than five digits after the above conditioning are not used for A-Port. In this case, a UIM is issued, and the message falls through to GTT.
3. Numbers with more than 15 digits after the above conditioning are not used for A-Port. In this case, a UIM is issued, and the message falls through to GTT.

Maintenance

Validation of A-Port Hardware Configuration

DSM card loading has been modified to verify the validity of the hardware configuration for the DSM cards. Hardware verification includes the following.

- **DSM Main Board Verification**

  An AMD-K6 (or better) main board is required to support the A-Port VSCCP application on the DSM card. EAGLE 5 ISS maintenance stores the validity status of the VSCCP card's main board configuration.

  NOTE: The system does not allow the A-Port feature to be turned ON if the hardware configuration is invalid.

  When the VSCCP application is initializing, it determines the main board type. The SCCP maintenance block is the mechanism used to relay the main board information to OAM. This requires that the application software be loaded to the VSCCP card and then the main board information received in the SCCP maintenance block must be verified. If the main board is determined to be invalid for the A-Port application, loading of the VSCCP card is automatically inhibited.

- **DSM Applique Memory Verification**

  The VSCCP application performs two types of memory validation to determine whether or not a DSM has sufficient memory to run A-Port:

  CAUTION: A-Port annot be enabled if any of the DSMs have less than 4 GB of memory installed. Refer to the *Dimensioning Guide for EPAP Advanced DB Features* Technical Reference for important information on the dimensioning rules and the DSM database capacity requirements.

  — *Local Memory Validation*. When the A-Port feature is first enabled, or any time the A-Port feature is enabled and the DSM is initializing, VSCCP checks to see if the DSM has at least 4GB of memory installed.

  — *Real-Time Memory Validation (during card initialization)*. Once communications between the DSM and EPAP have been established, and the DSM has joined the RMTP Tree, the EPAP starts downloading the RTDB to the DSM card. After the DSM card has downloaded the RTDB, it continues to receive database updates as necessary. The EPAP includes the size of the current RTDB in all records sent to the DSM. The DSM card compares the size required to the amount of memory installed, and issues a minor alarm once the database exceeds 80% of the DSM memory. If the database completely fills the DSM memory, a major alarm is issued, the DSM leaves the RMTP tree, and the DSM's status changes to IS-ANR/Restricted. The DSM continues to carry traffic.

- **Actions Taken When Hardware Determined to be Invalid**

  When the hardware configuration for a DSM card is determined to be invalid for the A-Port application, SCM automatically inhibits loading for that specific DSM card. A major alarm is generated indicating that card loading for that DSM card has failed and has been automatically inhibited (that is, prevented from reloading again). Refer to Chapter 5, “A-Port Related Alarms.”page 5-11, for the specific alarm that is generated. When card loading has been inhibited, the primary state of the card is set to oos-mt-dsbld, and the secondary state of the card is set to MEA (Mismatch of Equipment and Attributes).

  The following actions apply to a DSM card determined to be invalid:

  — The DSM will not download the EAGLE 5 ISS databases.

  — The DSM will not download the real-time RTDB from the EPAP.

  — The DSM will not accept RTDB updates (that is, add, change, delete) from the EPAP, nor will it accept STP database updates.

  To activate loading of a DSM card that has been automatically inhibited, the craftsperson must enter the **`alw-card`** command (**`alw-card:loc=xxxx`**).

- **Unstable Loading Mode**

At some point, having a number of invalid DSM cards results in some of the LIMs (Link Interface Module) being denied SCCP services. There is a threshold that needs to be monitored: if the number of valid DSMs is insufficient to provide service to at least 80% of the IS-NR LIMs, the system is said to be in an unstable loading mode. For other reasons why an EAGLE 5 ISS might be in an unstable loading mode, refer to Chapter 5, "Loading Mode Support Status Reporting.", page 5-4.

Maintenance Commands

The following commands are used for A-Port maintenance.

- The debug command **`ent-trace`** traps A-Port MSUs (Message Signaling Unit) based on the point code of the switch that generated the MSU (SSP), a particular DN and entity ID. For MDN and entity ID, the comparison is based on the search key built from the CdPA GTAI (Global Title Address Information) after any conditioning. The existing GT SCCP trigger also applies to A-Port messages.
- The command **`rept-stat-sccp`** reports current A-Port statistics. A MSU is considered to be a A-Port MSU after SRVSEL. This command reports A-Port statistics on a single SCCP card basis or on a A-Port system basis.

For more information, refer to Chapter 5, "Maintenance and Measurements", page 5-1.

A-Port Loading Mode Support

Loading mode support is not applicable for RTDB updates, since DSM cards use incremental loading from the EPAP. STP Administrative updates are allowed while a DSM card is loading and the system is above the 80% card stability threshold. If it is below the 80% threshold, loading mode support allows STP administrative updates to be rejected while cards finish loading and cross the 80% or better threshold.

For A-Port, loading mode support is applicable for database updates originating from the EAGLE 5 ISS GPSM-II's (General Purpose Service Module II cards) destined for the DSM cards.

Audit Requirements

The A-Port audit does not change EAGLE 5 ISS's compliance to STP audit requirements, to which it currently adheres. A-Port subscriber database tables residing on the EAGLE 5 ISS TDM fixed disks are audited by the existing STP audit, which only verifies tables on the EAGLE 5 ISS active and standby TDMs. There are audit mechanisms for A-Port tables residing on the EPAP platform that are downloaded to the DSM cards. The audit mechanisms consist of the following.

- On each DSM card and on the standby EPAP, a background audit calculates checksums for each A-Port RTDB table record and compares the calculated checksum against the checksum value stored in each record. If they are not the same, then a *database corrupt* alarm is issued.

- A process that runs periodically on the active EPAP (approximately every five seconds or less) sends the latest RTDB database level to all the DSM cards and the standby EPAP. If the database levels do not match, the standby EPAP or DSM card issues a *diff level* alarm.

For more information on the audit mechanisms, refer to the *EPAP Administration Manual.*

A-Port Protocol

A-Port supports both Message Transfer Part (MTP) routed, if enabled, and Global Title (GT) routed messages. GT routed messages perform SRVSEL lookup after Signaling Connection Control Part (SCCP) verification. GT routed messages support Unit Data Transfer (UDT) and non-segmented Extended Unit data (XUDT) message types.

Main Functions

A-Port and MNPCRP provide the following main functions:

Message Discrimination

Because A-Port provides translation of ported numbers, it provides a method to identify which messages should receive A-Port vs. GTT. This task of identification is provided via a service selector table where the user can define A-Port service for a combination of selectors. If a selector match is not found then, the message falls through to GTT or MTP routing (in case of MTP routing).

RN Prefix Deletion - SCCP

The decoded SCCP CDPA digits can have a RN concatenated with the MDN number in two forms:

- RN + DN
- CC+RN+DN

Consequently when the SNAI is either RNIDN, RNNDN, or RNSDN, A-Port compares the decoded MDN number with the list of provisioned home RN prefixes defined in the RTDB. If a match is found, A-Port strips off the RN digits from the number.

Number conditioning, if required, is performed after deleting the RN.

When the SNAI is CCRNDN, A-Port first compares the CC to the DEFCC list:

- If CC is not equal to the DEFCC, the message falls through to GTT.
- If CC=DEFCC then, A-Port compares the digits after CC with the list of provisioned Home RN prefixes that are defined in the RTDB. If a match is

found, then A-Port strips off the RN digits from the number. If no match is found, the no-prefix deletion is performed and A-Port processing continues.

RN Prefix Deletion - TCAP

The decoded MAP MDN digits can have a RN concatenated with the MDN number in two forms:

- RN + DN
- CC+RN+DN

The MAP NAI is used to determine the type: International, National or Subscriber. If MNP CRP is OFF, RN prefix deletion is not attempted. If MNP CRP is ON, then RN prefix deletion is attempted on all MDNs. If the MAP NAI indicates International, then a check is performed for the DEFCC prefix on the MDN. If DEFCC is detected, then HomeRN deletion is attempted using the CC+RN+DN format. All other MDNs will use the RN+DN format. A-Port compares the decoded MDN number with the list of provisioned home RN prefixes defined in the RTDB. If a match is found, the A-Port strips off the RN digits from the number. If no match is found, then no prefix deletion is performed and A-Port processing continues with number conditioning.

Number conditioning (if required) is performed after deleting the RN.

Number Conditioning

The RTDB stores international MDNs only. The received MDN number or SCCP CDPA digits may need to be converted to an international number to do a database lookup.

A-Port performs number conditioning upon successful decode and verification of the message. HomeRN and IEC or NEC prefixes are removed. The MDN is conditioned to international number format based on the service nature of address (SNAI for SCCP, TCAPSNAI for TCAP, or MTPLOCREQNAI for MTP.)

Database Lookup

A-Port performs database lookup using the conditioned DN digits encoded in Called Party. The database lookup yields one of the following four possible outcomes:

- Match is Found with Network Entity Assigned

  For subscriber entries with a RN and PT≠ **0**, LOCREQ and any IS41 messages are relayed. GTT is applied to any GSM or non-TCAP message .

  For subscriber entries with a SP, or a RN and PT= **0**, LOCREQ and any IS41 messages are relayed. GTT is applied to any GSM or non-TCAP message.

- Match is Found Without NE.

A data entry in the database is found if a subscriber entry in database (either an individual DN entry or a DN block) matches the conditioned Called Party.

If an entry is found without a NE assigned and PT= **1**, **2**, or **No PT**, the LOCREQ is returned without a NE.

The LOCREQ is routed via GTT if an entry is found without a NE assigned and PT= **0** or **5**. GTT is applied to any IS41 if an entry is found without a NE assigned. The EAGLE only modifies the MTP and SCCP information as required by standard GTT and keeps the TCAP portion of the message intact.

- Number conditioning fails, or if the DN is not found in the RTDB database, or the DN is found with non-A-Port data.

  Either the number has never been ported or it is an unknown number. The EAGLE 5 ISS routes the message via normal GTT/MTP routing. The EAGLE 5 ISS only modifies the MTP and SCCP information as required by normal GTT/MTP routing, if required, and keeps the TCAP portion of the message intact.

  Normal routing is performing GTT if the incoming message is sent to the EAGLE 5 ISS Self Point Code. Normal routing is routing the message to the MTP DPC if the incoming message is MTP-routed (the MTP DPC of the message is not the EAGLE 5 ISS Self Point Code)

- A-Port modifies the TCAP information for LOCREQ messages only when a HomeRN was deleted from the TCAP DN and **LOCREQRMHRN = YES**. Any gaps in the data caused by a change in field length will be resolved by shifting the remaining information up. Any IEC or NEC code is left.

  Since a DN may be the target of the A-Port, G-Port, or Migration message processing in a hybrid network (where an operator owns both GSM and IS41 network), message processing call disposition is based on what applications are turned on. Table 2-2 summarizes A-Port message processing.

Table 2-2. A-Port Message Processing

NE/PT	LOCREQ	Any IS41	Any GSM or non-TCAP
RN and PT ≠ 0	ACK (RN from EPAP)	Relay	GTT
SP or (RN and PT= 0)	Relay	Relay	GTT
No NE and PT= 1, 2, or No PT	ACK (no NE)	GTT	GTT
No NE and PT= 1 or 5	GTT	GTT	GTT
No DN entry found	GTT	GTT	GTT

Database lookup results in the following:

1. Applying GTT
   or
2. Relaying the message to the destination as noted in the database
   or
3. Returning an acknowledge message to the originating switch.

Message Relay describes how the EAGLE 5 ISS formulates a relayed message or a returned ACK.

Message Relay

The rules for formatting the SCCP CdPA GTA field are based on the value specified in the DigitAction field. In the case where a received IS41 message is relayed, the EAGLE formulates the SCCP CdPA GTA field of the outgoing message according to DigitAction specified. If DigitAction = none, the EAGLE 5 ISS does not overwrite the SCCP CdPA GTA. For all other values, the EAGLE 5 ISS formats the SCCP CdPA GTA according to the value assigned to DigitAction. Table 2-3 identifies the required DigitAction options as well as the samples of how the SCCP CdPA GTA of an outgoing message is formatted for each of the options. The illustration assumes the RN/SP ID is 1404 and default country code is 886.

Table 2-3. DigitAction Applications

DigitAction	Value in Incoming CdPA GTA	Value in Outgoing CdPA GTA	Meaning
none	886944000213	886944000213	No change to the Called Party GTA (default)
prefix	886944000213	1404886944000213	Prefix Called Party GTA with the entity id
replace	886944000213	1404	Replace Called Party GTA with the entity id
insert	886944000213	8861404944000213	Insert entity id after country code. (CC + Entity Id + NDC + SN)
delccprefix	886944000213	1404944000213	Delete country code and add prefix
delcc	886944000213	944000213	Delete country code

Table 2-3. DigitAction Applications

DigitAction	Value in Incoming CdPA GTA	Value in Outgoing CdPA GTA	Meaning
spare1	886944000213	treated as none	No change to the Called Party GTA (default)
spare2	886944000213	treated as none	No change to the Called Party GTA (default)

Returning Acknowledgement

The following encoding rules are are followed when a LOCREQ is returned:

1. When a response/ACK is returned, the EAGLE5 ISS follows the LOCREQ encoding rules along with the following enhancements for added flexibility:
2. Allow users to specify which TCAP LOCREQ parameter (the TCAP Outgoing Called Party parameter) encodes the RN (and/or DN) information
3. Allow users to specify the Digit Type value to encode the TCAP Outgoing Called Party parameter
4. Allow users to specify the value to encode the Nature of Number field of the TCAP Outgoing Called Party parameter;
5. Allow users to specify the value to encode the Numbering Plan field of the TCAP Outgoing Called Party parameter;
6. Allow users to specify the digit encoding format of the LOCREQ TCAP Outgoing Called Party parameter
7. Allow users to specify the MSCID values to be encoded in the LOCREQ message;
8. Allow users to specify the ESN values to be encoded in the LOCREQ message;
9. Allow users to specify how the digits of the LOCREQ MIN parameter shall be encoded.

MNP SCCP Service Re-Route Capability

This feature is designed to handle and control re-routing of MNP traffic from an affected node to alternate nodes within an operators network. This feature is an optional feature and doesn't affect the normal MNP functionality. This feature consists to the following main functions:

- Service State
- MNP Re-Routing
- MNP Capability Point Codes

Service State

Service state is part of the MNP SCCP Service Re-Route Capability. Service state is used to indicate the current state of MNP, either *ONLINE* or *OFFLINE*. Service state also gives the user the option to mark MNP as *OFFLINE* or *ONLINE* based on the current behavior. If a MNP problem is identified, MNP can be marked *OFFLINE* to initiate the re-routing procedure. In the case when SCCP cards need to be reloaded for some reason, MNP can be marked *OFFLINE* until enough cards are in-service and then bring MNP *ONLINE* in a controlled fashion. This feature also provides the option to mark MNP *OFFLINE* to perform a controlled re-routing during this state.

MNP Re-Routing

MNP Re-Routing is an optional feature and is enabled by defining a list of alternate PCs or by defining the GTT option. MNP re-routing is activated by marking MNP *OFFLINE*. When MNP is *OFFLINE* and alternate PCs are provisioned, any messages destined for MNP are re-routed to the available alternate PCs that are defined for MNP. If alternate PCs are not provisioned or none are available, then the GTT option is used. If the GTT option is set to YES, then messages destined for MNP will fall through to GTT as part of the re-routing procedure.

Re-Routing is applied to all MNP messages (based on SRVSEL). There is no distinction of DPC of the messages. The DPC of the message can be either True, Secondary, or Capability Point code.

MNP Capability Point Codes

Capability Point Codes (CPC) are also supported for MNP. The use of MNP capability point code aids the adjacent nodes in knowing about MNP outages. When MNP is brought down though administrative commands, all traffic destined to this MNP node will generate a Transfer Prohibited (TFP) message to the adjacent node about the MNP CPC. The TFP response to the adjacent node causes the traffic originating nodes to stop sending MNP traffic to this node. All MNP traffic coming into this node is sent to the alternate MNP nodes. Adjacent nodes will initiate `route-set-test` procedures after receipt of the TFP response.

If the messages are destined to the EAGLE 5 ISS true point code, then TFP messages are not generated when the MNP service is *OFFLINE*. The originator would not be aware of the outage.

Once MNP is back in service on the EAGLE 5 ISS, a Transfer Allowed (TFA) message is sent to the traffic adjacent nodes in response to route-set-test message. The traffic originating nodes will then start sending MNP traffic to the original MNP node.

MNP Capability point codes can be provisioned when the MNP feature is ON. There can be more than one Capability Point Code assigned to MNP CPCType.

When the MNP feature is turned ON and the MNP service state is set to *OFFLINE*, the user can change the service to *ONLINE* at any point. Once the feature is turned *ONLINE*, MNP will start processing messages if at least one SCCP card is IS-NR.

The MNP service can be set to *OFFLINE* at any point. This causes the EAGLE 5 ISS to stop processing MNP traffic and re-routing is performed.

The MNP service state is persistent. Booting the OAM or all the SCCP cards will not change the service state. Commands must be used to change the service state.

MNP supports up to 7 alternate PCs per domain. All 6 domains (ANSI, ITU-I, ITUN14, ITUN14 spare , ITU-I spare and ITUN24) are supported. An entire set of alternate PCs are considered as a re-route set. A GTT option is supported for MNP re-route. When the MNP service is *OFFLINE*, MNP messages fall though to GTT based on the GTT option. This option is set to YES by default.

MNP SCCP Service Re-Route Capability Summary

If the MNP service is not normal (because the RTDB is not in sync with MPS or if cards are misrouting MNP messages) then the MNP service state should be changed to *OFFLINE*.

Before changing MNP service to *OFFLINE*, it should be decided what kind of re-routing will be used during the outage. The EAGLE 5 ISS supports re-routing data to alternate point codes or falling thru to GTT as two possible options. Rereouting to alternate point code has priority over falling though to GTT. Examples of the two options follow:

Option 1

Define alternate point codes to re-route MNP traffic. This is the recommended option. Up to 7 alternate MNP nodes can be provisioned to re-reoute all the incoming MNP traffic. Once provisioned, the MNP service can be changed to *OFFLINE*.This example has any incoming being MNP traffic being load-shared to point codes based on the relative cost.

```
chg-sccp-serv:serv=mnp:pci1=1-1-1:rc1=10:pci2=2-2-2:rc2=10:pci3=3
-3-3:rc3=10:pci4=4-4-4:rc4=10
chg-sccp-serv:serv=mnp:pci1=1-1-1:rc1=10:pci2=2-2-2:rc2=10:pci3=3
-3-3:rc3=10:pci4=4-4-4:rc4=10
chg-sccp-serv:serv=mnp:pci1=5-5-5:rc1=10:pci2=6-6-6:rc2=10:pci3=7
-7-7:rc3=10:pci4=8-8-8:rc4=10
chg-sccp-serv:serv=mnp:state=offline
```

Option 2

With this option default GTT translations are provisioned for MNP service. Then the chg-sccp-serv command is used to provision GTT=YES. All MNP messages will fall through to GTT. An example command follows:

```
chg-sccp-serv:serv=mnp:gtt=yes ( it is yes by default
```

Once the MNP re-routing data is provisioned, MNP service can be changed to *OFFLINE*. At this point all MNP traffic will be re-reouted. The use can take necessary steps to correct the MNP service on the node. Until all the cards or enough cards are in active state with valid MNP database, MNP service should not be changed to *ONLINE*.

Table 2-4 shows the actions taken when the MNP service is offline, a message arrives at the affected node requiring MNP service, and SCCP cards are available.

Table 2-4. MNP SCCP Service Re-Route Capability Summary

Result of service selector	DPC	Alternate point code defined and available	GTT to be performed as fall through	Message Handling	Network Management
MNP	MNP Capability PC	Yes	N/A	Re-Route to alternate point code based on relative cost	TFP concerning CPC
MNP	MNP Capability PC	No*	Yes	Fall through to GTT and perform GTT	TFP concerning CPC
MNP	MNP Capability PC	No*	No	Generate UDTS (return cause = network failure)	TFP concerning CPC
MNP	MNP Capability PC	Not Defined	Yes	Fall through to GTT and perform GTT	TFP concerning CPC
MNP	MNP Capability PC	Not Defined	No	Generate UDTS (return cause = no xlation for this addr)	TFP concerning CPC
Not MNP	MNP Capability PC	N/A	N/A	Perform appropriate Service/GTT	None
MNP	True or Secondary PC or non-MNP CPC	Yes	N/A	Re-Route to alternate point code based on relative cost	None
MNP	True or Secondary PC or non-MNP CPC	No*	No	Generate UDTS (return cause = network failure)	None

*** Alternate point codes are defined and unavailable (prohibited or congested).**

Table 2-4. MNP SCCP Service Re-Route Capability Summary

Result of service selector	DPC	Alternate point code defined and available	GTT to be performed as fall through	Message Handling	Network Management
MNP	True or Secondary PC or non-MNP CPC	No*	Yes	Fall through to GTT and perform GTT	None
MNP	True or Secondary PC or non-MNP CPC	Not Defined	Yes	Fall through to GTT and perform GTT	None
MNP	True or Secondary PC or non-MNP CPC	Not Defined	No	Generate UDTS (return cause = no xlation for this addr)	None
Not MNP	True or Secondary PC or non-MNP CPC	N/A	N/A	Perform appropriate Service/GTT	None

*** Alternate point codes are defined and unavailable (prohibited or congested).**

MTP Routed SCCP Traffic for A-Port

A-Port supports MTP routed SCCP messages. LOCREQ messages are supported. This feature cannot be turned ON unless at least one of the following is turned ON:

- A-Port
- IGM
- G-Flex

Use of MTP Msgs for SCCP Apps feature adversely affects the SCCP capacity, as all of these messages are counted under SCCP capacity.

Once this feature is turned ON, all SCCP messages are routed to SCCP cards. The SCCP card then performs SCCP decode/verification. If the MTP routed messages have CDPA GTI =0 and A-Port is turned ON, then the message is sent for A-Port processing. If MNP service is OFFLINE, then MTP routing is performed on the messages.

If the MTP routed messages have CDPA GTI ≠ 0, then SRVSEL lookup is performed using the SCCP CDPA information. If the result of the lookup is MNP service, the message is sent to MNP handling. If a service selector is not defined or does not match, or if the service is OFFLINE, then MTP routing is performed on the messages. The MNP SCCP Service re-route is not performed on MTP routed messages.

MNP checks to see if the TCAP portion of the message is ITU or ANSI. If the message is ITU TCAP then normal routing (or G-Flex if provisioned) is performed on the message. If the message has ANSI TCAP, then A-Port general TCAP/MAP verification is performed if A-Port or IGM is turned ON.

SMS Address conversion is not affected by the MTP Msgs for SCCP Apps feature; SMS conversion handles only Registration Notification and SMS Notification messages.

A feature access key (FAK) for part number 893017401 is required to enable the MTP Msgs for SCCP Apps feature.

Figure 2-8. Message Control Flow

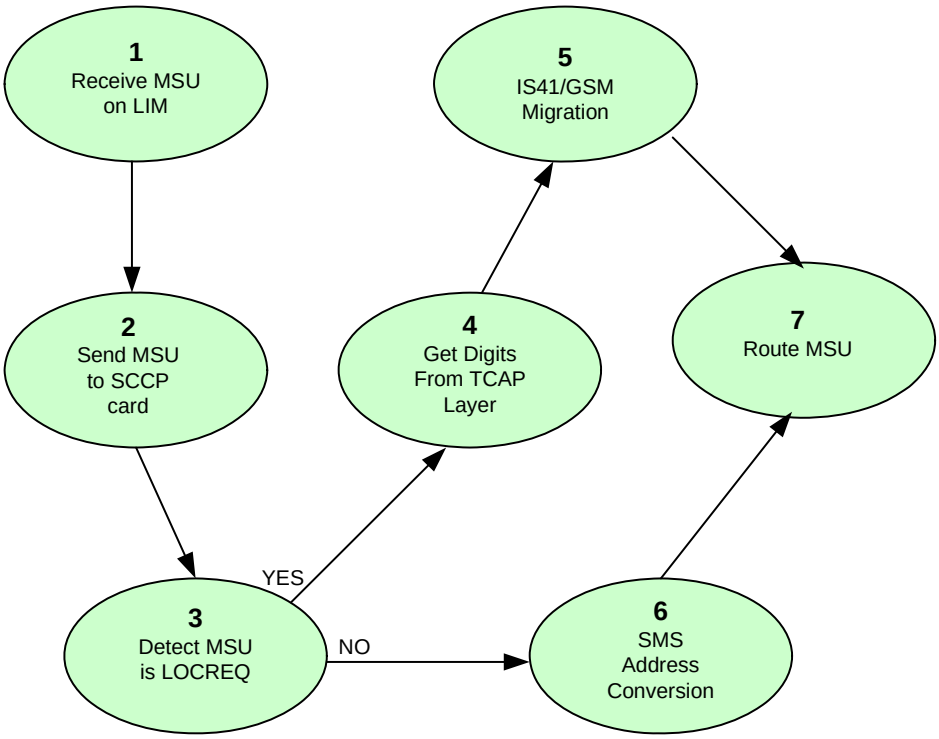

1. The MSU is received by the EAGLE 5 ISS
2. The MSU is sent to the SCCP Function.
3. The SCCP card examines the MSU and determines if it is a LOCREQ message.
4. For LOCREQ, the TCAP Digit Parameter contains the digits to apply to Migration. This is a mandatory parameter. The digits are in encoded.

5. IS41/GSM Migration is applied to the digits to determine if the subscriber is migrated. If so, a LOCREQ Return Result is generated to the OPC. If not, the LOCREQ is routed.
6. If the message is not a LOCREQ, ITUN-ANSI SMS Address Conversion is applied. SMS Address conversion feature does not have any impact because on this feature because SMS conversion handles only Registration Notification and SMS Notification messages.
7. The MSU is routed. MTP and SCCP conversion are performed if crossing a network boundary.

3

EAGLE 5 ISS A-Port Commands

Introduction

This chapter describes the Commands for maintenance, measurements, and administration of the A-Port features. EAGLE 5 ISS A-Port commands provide for the provisioning, operations, and maintenance activities of the EAGLE 5 ISS DSM cards and associated network connections.

EAGLE 5 ISS Commands for A-Port

This section includes the EAGLE 5 ISS commands that are either entirely new or modified for the A-Port feature. This chapter contains a brief description of the functions they provide and appropriate examples of their use. User commands are listed in Table 3-1.

The command examples in this chapter illustrate the requirements and provide suggestions for suitable names and output. Complete descriptions of these commands, however, are shown in detail in the Commands Manual, including parameter names, valid values, and output examples for the commands.

Table 3-1. Commands for EAGLE 5 ISS A-Port

EAGLE 5 ISS Commands for A-Port Feature			
act-gpl	copy-gpl	inh-alm	rept-stat-trbl
alw-card	dlt-map	inh-card	rtrv-ctrl-feat
chg-ctrl-feat	dlt-card	rept-ftp-meas	rtrv-card
chg-db	dlt-sccp-serv	rept-meas	rtrv-gpl
chg-gpl	dlt-srvsel	rept-stat-alm	rtrv-is41opts
chg-is41opts	dlt-sid	rept-stat-db	rtrv-measopts
chg-measopts	enable-ctrl-feat	rept-stat-gpl	rtrv-sccp-serv
chg-sccp-serv	ent-card	rept-stat-meas	rtrv-sid
chg-sid	ent-map	rept-stat-mps	rtrv-srvsel
chg-srvsel	ent-srvsel	rept-stat-sccp	unhb-alm
		rept-stat-sys	

EAGLE 5 ISS IS41 Options Commands

The A-Port system options (is41opts) commands are used to change and report on the values of one or more of the STP node level processing option indicators maintained in the IS41option tables. All values are assigned initially to system defaults at STP installation time, and they can be updated later using the **`chg-is41opts`** command.

- **chg-is41opts: Change IS41 Options Command** – The **`chg-is41opts`** command changes IS41-specific options in the database. This command updates the IS41OPTS table. The default parameter values are always overwritten when specified. Refer to the *Commands Manual* for details of this command

Table 3-2. **`chg-is41opts`** Parameters - Class = DATABASE

Parameter	Optional/ Mandatory	Range	Description
esnmfg	Optional	0-255, none	TCAP locreq esn manufacture's code. Used to specify the value to be encoded in the TCAP locreq ESN parameter, manufacture's code part.

Table 3-2. `chg-is41opts` Parameters - Class = DATABASE (Continued)

Parameter	Optional/ Mandatory	Range	Description
esnsn	Optional	0-16777215	TCAP locreq esn serial number. Used to specify the value to be encoded in the TCAP locreq ESN parameter, serial number part.
iec	Optional	digit string 1-5 digits, none	International escape code
locreqdn	Optional	tcap, sccp	Use this parameter to define whether the Called Party will be obtained from the SCCP layer or the TCAP layer of a received LOCREQ for database lookup
locreqrmhrn	Optional	yes, no	Locreq RM HRN. Used to specify if HomeRN is to be removed from the TCAP Outgoing Called party for a relayed LOCREQ message.
mscmktid	Optional	0-65535	Locreq MSCID market id. Used to specify the value to be encoded in locreq MSCID parameter for Market ID.
mscswitch	Optional	0-255	Locreq mscid market id switch part is used to specify the value to be encoded in locreq MSCID parameter, market id switch part
mtplocreqnai	Optional	ccrndn, frmsg, intl, natl, rnidn, rnndn, rnsdn, sub}, none	Message Translation Part LOCREQ nature of address indicator. Used to define how Called Party obtained from the TCAP layer of a received MTP-routed LOCREQ message, is interpreted.

Table 3-2. `chg-is41opts` Parameters - Class = DATABASE (Continued)

Parameter	Optional/ Mandatory	Range	Description
nec	Optional	digit string 1-5 digits, none	National escape code
rspcdpari	Optional	frmsg, gt, ssn	Response Called Party Routing Indicator. Use this parameter to specify the value of the Routing Indicator bit to encode the SCCP CdPA GTA of a returned locreq message.
rspcgpanai	Optional	ccrndn, frmsg, intl, natl, rnidn, rnndn, rnsdn, sub}, none	Response calling party nature of address indicator. Used to specify a new NAI value to override the NAI value specified in the SCCP CdPA of a received LOCREQ/SMSREQ if the message is to be relayed after database lookup.
rspcgpanp	Optional	0-15, none	Response calling party numbering plan. Used to specify a new Numbering Plan value to override the Numbering Plan value specified in the SCCP CdPA of a received LOCREQ/SMSREQ if the message is to be relayed after database lookup.
rspcgpapcp	Optional	frmsg, included, notincluded	Response Calling Party Point Code Present. Used to specify the value of the Point Code Present bit to encode the SCCP CgPA GTA of a returned locreq message

Table 3-2. `chg-is41opts` Parameters - Class = DATABASE (Continued)

Parameter	Optional/ Mandatory	Range	Description
rspcgpari	Optional	frmsg, gt, ssn	Response Calling Party Routing Indicator. Used to specify the value of the Routing Indicator bit to encode the SCCP CgPA GTA of a returned locreq message.
rspcgpatt	Optional	0-255, none	Response calling party translation type. Used to specify a new TT value to override the TT value specified in the SCCP CdPA of a received LOCREQ/SMSREQ if the message is to be relayed after database lookup.
rspdig	Optional	ccrndn, hrnrndn, rn, rndn	Use this parameter to specify the digit encoding format of the locreq TCAP Outgoing Called Party parameter on a per EAGLE 5 ISS node basis.
rspdigtype	Optional	0-255	Response digit type. Used to specify DigitType value to encode the TCAP Outgoing Called Party parameter.
rspmin	Optional	homern, nothomern, tendelhomern, tenhomern, tenzero	Response locreq min parameter encoding. Used to specify how the digits of the locreq MIN parameter are to be encoded.
rspnon	Optional	0-255, none	MSRN nature of number. Used to specify the Nature of Number value of the TCAP Outgoing Called Party parameter.

Table 3-2. `chg-is41opts` Parameters - Class = DATABASE (Continued)

Parameter	Optional/ Mandatory	Range	Description
rspnp	Optional	0-15, none	MSRN numbering plan. Used to specify the Numbering Plan values of the TCAP Outgoing Called Party parameter.
rspparm	Optional	ddigit, rtdigit, tlist	Response parameter. Used to specify which TCAP locreq parameter (TCAP Outgoing Called Party) will encode the RN and/or DN information.
smsreqbypass	Optional	yes, no	Use this parameter to specify whether a received SMSREQ that passes the MNP Service Selector (serv=mnp parameter is specified) will be subject to A-Port message processing.
tcapsnai	Optional	ccrndn, frmsg, intl, natl, rnidn, rnndn, rnsdn, sub}, none	Use this parameter to specify how Called Party, obtained from the TCAP layer of a received LOCREQ message shall be interpreted, either based on the Nature of Number encoded in the TCAP Digits[Dialed] parameter, or based on the selection specified by the mtplocreqnai parameter.

- **rtrv-is41opts: Retrieve IS41 Options Command** – The `rtrv-is41opts` command displays the IS41 option indicators maintained in the IS41OPTS table.

  The following IS41 options are displayed.

```
rtrv-is41opts

    tekelecstp 06-08-15 10:33:44 EST  EAGLE 36.0.0

    IS41 OPTIONS
    ------------------------
    SMSREQBYPASS    = NO
```

```
LOCREQDN        = TCAP
IEC             = 0
NEC             = 00
RSPCGPARI       = FRMSG
RSPCGPAPCP      = FRMSG
RSPCDPARI       = FRMSG
RSPCDPAPCP      = FRMSG
RSPCGPANAI      = 0
RSPCGPANP       = 0
RSPCGPATT       = 0
MTPLOCREQNAI    = SUB
RSPPARM         = DDIGIT
RSPDIG          = RN
RSPNON          = 0
RSPNP           = 0
RSPMIN          = NOTHOMERN
MSCMKTID        = 32300
MSCSWITCH       = 20
ESNMFG          = 0
ESNSN           = 0
RSPDIGTYPE      = 0
LOCREQRMHRN     = NO
TCAPSNAI        = SUB
```

EAGLE 5 ISS A-Port Service Selector Commands

The A-Port service selector (srvsel) commands are used to provision, remove, change, and report on the applicable service selectors required to change a service entry for DSM services. These commands provide some flexibility when provisioning the type of messages that require A-Port processing. There are four variants, each of which is described in the following sections: **`ent-srvsel`**, **`chg-srvsel`**, **`dlt-srvsel`**, and **`rtrv-srvsel`**. For further details on the EAGLE 5 ISS service selector commands (such as command rules and output format), refer to the *Commands Manual*.

- **ent-srvsel: Enter A-Port Service Selectors Command** – The **`ent-srvsel`** command specifies that the applicable A-Port service selectors indicating A-Port processing are required. The A-Port FAK must be enabled before entering this command. The available parameters follow:

Table 3-3. **`ent-srvsel`** Parameters - Class = DATABASE

Parameter	Optional/ Mandatory	Range	Description
gti, gtia, gtii, gtin, gtin24	Mandatory	2, 4	Global Title Indicator
serv	Mandatory	mnp	DSM service
ssn	Mandatory	0-255, *	Subsystem number
tt	Mandatory	0-255	Translation Type
nai	Optional	1sub, rsvd, natl, intl	Nature Of Address Indicator

Table 3-3. `ent-srvsel` Parameters - Class = DATABASE (Continued)

Parameter	Optional/ Mandatory	Range	Description
naiv	Optional	0-127	NAI Value
np	Optional	1e164, generic, x121, f69, e210, e212, e214, private	Numbering Plan
npv	Optional	0-15	Numbering Plan Value
snai	Optional	1sub, natl, intl, rnidn, rnndn, rnsdn, ccrndn	Service Nature of Address Indicator
snp	Optional	1e164, e212, e214	Service Numbering Plan

- **chg-srvsel: Change A-Port Service Selector Command** – The `chg-srvsel` command specifies the applicable A-Port selectors required to change an existing A-Port selector entry. The available parameters follow:

Table 3-4. `chg-srvsel` Parameters - Class = DATABASE

Parameter	Optional/ Mandatory	Range	Description
gti, gtia, gtii, gtin, gtin24	Mandatory	2, 4	Global Title Indicator
ssn	Mandatory	0-255, *	Subsystem number
tt	Mandatory	0-255	Translation Type
nai	Optional	1sub, rsvd, natl, intl	Nature Of Address Indicator
naiv	Optional	0-127	NAI Value
np	Optional	1e164, generic, x121, f69, e210, e212, e214, private	Numbering Plan
npv	Optional	0-15	Numbering Plan Value
nserv	Mandatory	eir, gflex, gport, inpq, inpmr, mnpsms, smsmr, idps, idpr, mnp	New DSM service
nsnai	Optional	1sub, natl, intl, rnidn, rnndn, rnsdn, ccrndn	New Service Nature of Address Indicator
nsnp	Optional	1e164, e212, e214	New Service Numbering Plan

- **dlt-srvsel: Delete A-Port Service Selector Command** – The `dlt-srvsel` command deletes a A-Port service selector. The available parameters follow:

Table 3-5. dlt-srvsel Parameters - Class = DATABASE

Parameter	Optional/ Mandatory	Range	Description
gti, gtia, gtii, gtin, gtin24	Mandatory	2, 4	Global Title Indicator
tt	Mandatory	0-255	Translation Type
ssn	Mandatory	0-255, *	Subsystem number
nai	Optional	1sub, rsvd, natl, intl	Nature Of Address Indicator
naiv	Optional	0-127	NAI Value
np	Optional	1e164, generic, x121, f69, e210, e212, e214, private	Numbering Plan
npv	Optional	0-15	Numbering Plan Value

- **rtrv-srvsel: Retrieve A-Port Service Selector Command** – The `rtrv-srvsel` command displays a list of administered A-Port service selector combinations. All output is sorted first by service, then by global title domain (ANSI first, followed by ITU), GTI, translation type, numbering plan, and by the nature of address indicator. The output can be filtered by specifying any optional parameter. The available parameters follow:

Table 3-6. rtrv-srvsel Parameters - Class = DATABASE

Parameter	Optional/ Mandatory	Range	Description
gti, gtia, gtii, gtin, gtin24	Optional	2, 4	Global Title Indicator
nai	Optional	sub, rsvd, natl, intl	Nature Of Address Indicator
naiv	Optional	0-127	NAI Value
np	Optional	e164, generic, x121, f69, e210, e212, e214, private	Numbering Plan
npv	Optional	0-15	Numbering Plan Value
serv	Optional	mnp	DSM service
snai	Optional	1sub, natl, intl, rnidn, rnndn, rnsdn, ccrndn	Service Nature of Address Indicator
snp	Optional	1e164, e212, e214	Service Numbering Plan
ssn	Mandatory	0-255, *	Subsystem number
tt	Optional	0-255	Translation Type

EAGLE 5 ISS Feature Key Control Commands

These commands are used to enable, update, view, and control the A-Port feature. A Feature Access Key is used to turn the A-Port feature on. This feature must be purchased in order to have access to the Feature Access Key, which must be used when enabling these features.

There is no temporary key associated with this feature and once the feature is on it cannot be turned off. There are two steps that will be taken to turn the A-Port feature on. The first step is to enable the feature. The second step is to turn the status to **on**.

Additional verifications are done to ensure the correct hardware is present in the system. These checks include verifying that the GTT bit is on and that there are no SCCP GLP cards provisioned. Refer to the *Commands Manual* for details of this command.

The part number 893016601 is used to enable A-Port feature on the EAGLE 5 ISS.

- **enable-ctrl-feat: Enable Control Feature Command** – The **`enable-ctrl-feat`** command is used for the permanent enabling of the A-Port feature. An example of the command using the A-Port part number follows:

  `enable-ctrl-feat:partnum=893016601:fak=<Feature Access Key>`

- **chg-ctrl-feat: Change Control Feature Command** – The **`chg-ctrl-feat`** command is used to activate the A-Port feature. This command requires the A-Port feature to be enabled as a prerequisite. The A-Port feature cannot be enabled if any ASMs or TSMs are in the system.

  `chg-ctrl-feat:partnum=893016601:status=on`

- **rtrv-ctrl-feat: Retrieve Control Feature Command** – The **`rtrv-ctrl-feat`** command is used display the status of the features (on/off) and to show the trial period remaining if temporarily enabled. An example output follows :

```
The following features have been permanently enabled:
    Feature Name              Partnum    Status  Quantity
    IPGWx Signaling TPS       893012805  on          2000
    ISUP Normalization        893000201  on          ----
    Command Class Management  893005801  on          ----
    Prepaid SMS Intercept Ph1 893006701  on          ----
    Intermed GTT Load Sharing 893006901  on          ----
    MNP Circ Route Prevent    893007001  on          ----
    XGTT Table Expansion      893006101  on        400000
    XMAP Table Expansion      893007710  on          3000
    Large System # Links      893005910  on          2000
    Routesets                 893006401  on          6000
    EAGLE5 Product            893007101  off         ----
    EAGLE Product             893007201  off         ----
    IP7 Product               893007301  off         ----
    Network Security Enhance  893009101  off         ----
    HC-MIM SLK Capacity       893011801  on            64
    MNP                       893016601  on          ----
    EAGLE OA&M IP Security    893400001  off         ----
    SCCP Conversion           893012001  on          ----
```

```
    The following features have been temporarily enabled:
    Feature Name              Partnum   Status Quantity   Trial Period Left
    MNP Circ Route Prevent    893007001 On        ----  20 days 8 hrs 57 mins

    The following features have expired temporary keys:
    Feature Name              Part Num
    OnOffFeatV                893492401

;
```

EAGLE 5 ISS MNP SCCP Service Commands

The **sccp-serv** commands allow for services to be taken ON and OFF line and their processing load to be shifted to other designated nodes. These commands also support the assignment of PCs to PC groups used for MNP re-route assignment. There are three variants, each of which is described in the following sections: **chg-sccp-serv**, **dlt-sccp-serv**, and **rtrv-sccp-serv**.

Entries (using the **chg-sccp-serv** command) are provisioned in the SCCP-SERV table, and are shown by the **rtrv-sccp-serv** command output. This reduces the maximum number of entries that the MRN table can contain by the number of entries shown in the **rtrv-sccp-serv** command output. For more information on provisioning MRN tables, refer to the *Database Administration Manual - Gobal Title Transaltions* manual.

For further details on the EAGLE 5 ISS MNP SCCP service commands (such as command rules and output format), refer to the *Commands Manual*.

- **chg-sccp-serv: Change MNP SCCP Service Command** – The **chg-sccp-serv** command is used to add point codes to an existing service group, or to change the Relative Cost (RC) of existing point codes in a group. SCCP Service groups are organized by service (G-Flex, G-Port, MNP) and point code network type (ANSI, ITU-I, Spare ITU-I, ITU-N, Spare ITU-N, or ITUN-24). Up to seven PCs may be in a network type grouping for service re-route load sharing. This command allows for additions/modifications of up to 4 PCs at once. The point code parameters support the Spare Point Code subtype prefix **s-** for ITU-I and ITU-N point codes. The available parameters follow:

Table 3-7. chg-sccp-serv Parameters - Class = DATABASE

Parameter	Optional/ Mandatory	Range	Description
serv	Mandatory	gport, gflex, mnp	Service
state	Optional	offline, online	Status
gtt	Optional	no, yes	Global Title Translation
pc1, pca1, pci1, pcn1, pcn241	Optional	Refer to Commands Manual	Post GTT-translated PC

Table 3-7. chg-sccp-serv Parameters - Class = DATABASE (Continued)

Parameter	Optional/ Mandatory	Range	Description
rc1	Optional	00-99	Relative Cost
pc2, pca2, pci2, pcn2, pcn242	Optional	Refer to Commands Manual	Post GTT-translated PC
rc2	Optional	00-99	Relative Cost
pc3, pca3, pci3, pcn3, pcn243	Optional	Refer to Commands Manual	Post GTT-translated PC
rc3	Optional	00-99	Relative Cost
pc4, pca4, pci4, pcn4, pcn244	Optional	Refer to Commands Manual	Post GTT-translated PC
rc4	Optional	00-99	Relative Cost

- **dlt-sccp-serv: Delete MNP SCCP Service Command** – The `dlt-sccp-serv` command is used remove entries from the SCCP Service table. A single command may either remove a PC from a group, or remove the entire group. The available parameters follow:

Table 3-8. dlt-sccp-serv Parameters - Class = DATABASE

Parameter	Optional/ Mandatory	Range	Description
serv	Mandatory	gport, gflex, mnp	Service
pc1, pca1, pci1, pcn1, pcn241	Optional	Refer to Commands Manual	Post GTT-translated PC
pc2, pca2, pci2, pcn2, pcn242	Optional	Refer to Commands Manual	Post GTT-translated PC
pc3, pca3, pci3, pcn3, pcn243	Optional	Refer to Commands Manual	Post GTT-translated PC
pc4, pca4, pci4, pcn4, pcn244	Optional	Refer to Commands Manual	Post GTT-translated PC
all	Optional	No, Yes	Yes will delete the entire group

- **rtrv-sccp-serv: Retrieve MNP SCCP Service Command** – The **`rtrv-sccp-serv`** command is used to display the SCCP Service application relationship information maintained by the EAGLE 5 ISS. Point codes are grouped by service. The sample output that follows indicates that the MNPt service is Online and there are ANSI and ITU-I point codes in the service set.

```
tekelecstp 05-12-20 08:51:53 EST  36.0.0-55.43.0
rtrv-sccp-serv
Command entered at terminal #4.

   --------------------------------------
   Service     : GFLEX
   State       : Offline
   GTT Option  : Yes
   --------------------------------------

   --------------------------------------
   Service     : MNP
   State       : Online
   GTT Option  : Yes
   --------------------------------------
   ANSI PC         RC
   001-001-001    10
   002-002-002    20
   003-003-003    30
   004-004-004    40

   ITUI PC         RC
   2-002-2        10
   3-003-3        10

;
```

Maintenance and Measurements User Interface Commands

This section provides a description of the user interface for maintenance and measurements for the A-Port feature. The commands that follow allow provisioning, operations, and maintenance activities for DSM cards.

The command examples shown illustrate the requirements and provide suggestions for suitable names and output. The commands are described in detail in the *Commands Manual*, where the actual parameter names, valid values, and output for the commands are provided.

Commands described here include:

- “chg-sid / dlt-sid”
- “ent-map / dlt-map”
- “rept-stat-sys”
- “rept-stat-sccp”
- “rept-stat-mps”
- “rept-ftp-meas”
- “rept-meas”

- “rept-stat-meas”
- “rtrv-measopts / chg-measopts”
- “rept-stat-trbl”
- “rept-stat-alm”
- “chg-db”
- “rept-stat-db”
- “inh-card / alw-card”
- “ent-card / rtrv-card / dlt-card”
- “chg-gpl / act-gpl / rtrv-gpl / rept-stat-gpl / copy-gpl”
- “inh-alm / unhb-alm”

rept-stat-sys

This command is used to determine the location of troubles in the MNP subsystem. The display shows the number items that are in service (IS-NR) and the how many are in another state (IS-ANR, OOS-MT, OOS-MT-DSBLD). Refer to the *Commands Manual* for details of this command.

A sample output follows:

```
eagle10605 01-07-25 02:32:46 EST  Rel 36.0.0-49.10.0
    MAINTENANCE STATUS REPORT
       Maintenance Baseline established.
       Routing Baseline established.
       SCCP Baseline established.
       ALARMS:     CRIT=    9     MAJR=  10   MINR=   3     INH=    2
       OAM 1113    IS-NR          Active                    INH=    0
       OAM 1115    IS-NR          Standby                   INH=    0
       LIM  CARD   IS-NR=   3     Other=        0           INH=    0
       X25  CARD   IS-NR=   0     Other=        0           INH=    0
       SCCP CARD   IS-NR=   1     Other=        0           INH=    0
       GLS  CARD   IS-NR=   0     Other=        0           INH=    0
       SLAN CARD   IS-NR=   0     Other=        0           INH=    0
       EMDC CARD   IS-NR=   2     Other=        0           INH=    0
       MCPM CARD   IS-NR=   2     Other=        0           INH=    0
       IMT         IS-NR=   2     Other=        0
       HMUX        IS-NR=   2     Other=        0           INH=    0
       HIPR        IS-NR=   2     Other=        0           INH=    0
       SLK         IS-NR=   0     Other=        6           INH=    0
       DLK         IS-NR=   0     Other=        0           INH=    0
       LINK SET    IS-NR=   0     Other=        4           INH=    0
       NDC IP LK   IS-NR=   4     Other=        0           INH=    0
       MCPM IP LK  IS-NR=   2     Other=        0           INH=    0
       SS7 DPC     IS-NR=   0     Other=        6           INH=    0
       X25 DPC     IS-NR=   0     Other=        0           INH=    0
       CLUST DPC   IS-NR=   0     Other=        1           INH=    0
       XLIST DPC   IS-NR=   0     Other=        0
       DPC  SS     Actv =   0     Other=        0
       SEAS SS     IS-NR=   0     Other=        0
       SEAS  X25   IS-NR=   0     Other=        0           INH=    0
       LSMS SS     IS-NR=   0     Other=        0
       LSMS Conn   IS-NR=   0     Other=        0           INH=    0
```

```
NDC SS      IS-NR=   1     Other=        0
NDC  Q.3    IS-NR=   0     Other=        2           INH=    1
TERMINAL    IS-NR=   2     Other=       14           INH=    0
MPS         IS-NR=   2     Other=        0
EIR SS      IS-NR=   1     Other=        0
```

rept-stat-sccp

The output for the **rept-stat-sccp** command displays the VSCCP cards and the GTT, G-Flex, MNP, INP , and EIR services executing on those cards. This command also displays any cards that are denied SCCP service. When turned on, the A-Port and IGM features share statistic status with the G-Port feature. If only the G-Port feature is on, the display title is GPORT. If the A-Port or IGM feature are on, with or without the G-Port feature, the display title for the statistic status changes from GPORT to MNP.

The loc parameter displays detailed view of the status of SCCP services provided by a specific SCCP or VSCCP card. Fields are omitted if an associated feature is not turned on.

The mode parameter targets the general SCCP traffic performance for both SCCP and VSCCP cards. The report supplies message rates for group ticket voucher (TVG) performance.

Refer to the *Commands Manual* for details of this command.

The following sample output shows the output of the **rept-stat-sccp** command with the G-Flex, G-Port, INP, and A-Port features on. The EIR feature is not enabled, and the ansigflex system option is disabled:

```
tekelecstp 000623 13:34:22 EST  EAGLE5 35.0.0
    SCCP SUBSYSTEM REPORT IS-NR          Active
         SCCP ALARM STATUS = No Alarms
    INPQ SUBSYSTEM REPORT IS-ANR         Restricted  -----
         ASSUMING MATE'S LOAD
         INPQ: SSN STATUS = Allowed     MATE SSN STATUS  = Prohibited
         INPQ ALARM STATUS = No Alarms
    GFLEX SERVICE REPORT IS-ANR         Active
         GFLEX ALARM STATUS = No Alarms
    MNP SERVICE REPORT   IS-ANR         Active
         MNP ALARM STATUS   = No Alarms

    SCCP Cards Configured=4  Cards IS-NR=2
    System TPS Alarm Threshold = 100% Total Capacity
    System Peak SCCP Load = 3000 TPS
    System Total SCCP Capacity = 5000 TPS

    CARD   VERSION      PST          SST         AST       MSU USAGE  CPU USAGE
    --------------------------
    1212   101-001-000  IS-NR        Active      ALMINH       45%         30%
    1301 P 101-001-000  IS-NR        Active      ------       35%         40%
    1305   -----------  OOS-MT       Isolated    ------        0%          0%
    2112   -----------  OOS-MT-DSBLD Manual      ------        0%          0%
    --------------------------
    SCCP Service Average MSU Capacity = 40%       Average CPU Capacity = 35%
```

```
AVERAGE CPU USAGE PER SERVICE:
  GTT   = 15%  GFLEX =  5%  MNP = 10%
  INPMR =  2%  INPQ  =  3%

TOTAL SERVICE STATISTICS:
                                   FAIL     REROUTE\      FORWARD
  SERVICE    SUCCESS    ERRORS   RATIO     WARNINGS        TO GTT     TOTAL
  GTT:          1995         5      0%            -             -      2000
  GFLEX:         500         1      0%            4            10       515
  MNP:           800         0      0%            2             3       805
  INPMR:          50         5      0%            0            15        70
  INPQ:          499         1      0%            -             -       500

Command Completed.
```

rept-stat-mps

This command is used to display the overall status of the application running on the MPS (multi-purpose server).

If the G-Port, G-Flex, A-Port, or Migration feature is turned on, the status of the GSM and EPAP are displayed.

Refer to the *Commands Manual* for details of this command.

The following sample output follows:

```
Integrat40 00-06-24 10:37:22 EST  Rel 36.0.0-49.10.0

                     VERSION       PST            SST        AST
    EPAP A           027-015-000   IS-NR          Active     -----
        CRITICAL PLATFORM    ALARM DATA = No Alarms
        MAJOR    PLATFORM    ALARM DATA = No Alarms
        MINOR    PLATFORM    ALARM DATA = No Alarms
        CRITICAL APPLICATION ALARM DATA = No Alarms
        MAJOR    APPLICATION ALARM DATA = No Alarms
        MINOR    APPLICATION ALARM DATA = No Alarms
              ALARM STATUS = No Alarms

                     VERSION       PST            SST        AST
     EPAP B          027-015-000    OOS-MT         Fault      Standby
        CRITICAL PLATFORM    ALARM DATA = No Alarms
        MAJOR    PLATFORM    ALARM DATA = h'0123456789ABCDEF
        MINOR    PLATFORM    ALARM DATA = h'0123456789ABCDEF
        CRITICAL APPLICATION ALARM DATA = No Alarms
        MAJOR    APPLICATION ALARM DATA = h'0123456789ABCDEF
        MINOR    APPLICATION ALARM DATA = No Alarms
              ALARM STATUS = ** 0371  Major Platform Failure(s)

    CARD   PST          SST       EIR STAT
    1106 P IS-NR        Active    ACT
    1201   IS-ANR       Active    SWDL
    1205   OOS-MT-DSBLD Manual    -------
    1302   OOS-MT       Isolated  -------
    1310   IS-ANR       Standby   SWDL

    CARD 1106 ALARM STATUS = No Alarms
      DSM PORT A:      ALARM STATUS       = No Alarms
      DSM PORT B:      ALARM STATUS       = No Alarms
    CARD 1201 ALARM STATUS = No Alarms
```

```
      DSM PORT A:      ALARM STATUS       = **  0084 IP Connection Unavailable
      DSM PORT B:      ALARM STATUS       = **  0084 IP Connection Unavailable
    CARD 1205 ALARM STATUS = No Alarms
      DSM PORT A:      ALARM STATUS       = **  0084 IP Connection Unavailable
      DSM PORT B:      ALARM STATUS       = **  0084 IP Connection Unavailable
    CARD 1302 ALARM STATUS = ** 0013 Card is isolated from the system
      DSM PORT A:      ALARM STATUS       = **  0084 IP Connection Unavailable
      DSM PORT B:      ALARM STATUS       = **  0084 IP Connection Unavailable
    CARD 1310 ALARM STATUS = No Alarms
      DSM PORT A:      ALARM STATUS       = **  0084 IP Connection Unavailable
      DSM PORT B:      ALARM STATUS       = **  0084 IP Connection Unavailable

    Command Completed.
;
```

rept-stat-trbl

This command displays a summary the device trouble notifications. The severity of each alarm is indicated in the output report. Refer to the *Commands Manual* for details of this command.

A sample output follows:

```
eagle10207 02-08-23 10:09:59 EST  Rel 36.0.0-49.10.0

    SEQN UAM  AL DEVICE    ELEMENT       TROUBLE TEXT
    0001.0013 ** CARD 1201 GLS           Card is isolated from the system
    0002.0013 ** CARD 1211 SS7ANSI       Card is isolated from the system
    0011.0013 ** CARD 1101 SCCP          Card is isolated from the system
    0013.0013 ** CARD 1103 GLS           Card is isolated from the system
    0015.0013 ** CARD 1105 VSCCP         Card is isolated from the system
    0018.0013 ** CARD 1115 OAM           Card is isolated from the system
    0019.0236 ** SLK 1211,B   ls1134     REPT-LKF: not aligned
    0020.0236 ** SLK 1311,A   ls1134567  REPT-LKF: not aligned
    0021.0236 ** SLK 1312,A   ls113456   REPT-LKF: not aligned
    0022.0236 ** SLK 1313,A   ls11345    REPT-LKF: not aligned
    0023.0236 ** SLK 1314,A   ls113467   REPT-LKF: not aligned
    0024.0236 ** SLK 1315,A   ls11234567 REPT-LKF: not aligned
    0025.0236 ** SLK 1316,A   ls11345678 REPT-LKF: not aligned
    0026.0318 ** LSN ls11234567          REPT-LKSTO: link set prohibited
    0027.0318 ** LSN ls11345678          REPT-LKSTO: link set prohibited
    0028.0318 ** LSN ls1134567           REPT-LKSTO: link set prohibited
    0029.0318 ** LSN ls113456            REPT-LKSTO: link set prohibited
    0030.0318 ** LSN ls11345             REPT-LKSTO: link set prohibited
    0035.0318 ** LSN ls113467            REPT-LKSTO: link set prohibited
    0032.0318 ** LSN ls1134              REPT-LKSTO: link set prohibited
    0033.0336 ** SCCP SYSTEM             LIM(s) have been denied SCCP service
    0034.0349 *C SEAS SYSTEM             SEAS unavailable
    0035.0356 *C LSMS SYSTEM             LSMS unavailable
    0036.0455 *C EIR SYSTEM              EIR Subsystem is not available
    0019.0236 *C T1PORT 1301,1           REPT-T1F:FAC-T1   LOS failure
    Command Completed.
```

rept-stat-alm

This command includes the alarm totals of the A-Port subsystem and DSM/EPAP IP links. Refer to the *Commands Manual* for details of this command. Here is an example of the command and output.

```
rept-stat-alm

Command Accepted - Processing

    eagle10605 99-06-24 23:59:39 EAGLE 35.0.0
    rept-stat-alm
    Command entered at terminal #10.
;

    eagle10605 99-06-24 23:59:39 EAGLE 35.0.0
    ALARM  TRANSFER= RMC
    ALARM  MODE      CRIT= AUDIBLE     MAJR= AUDIBLE     MINR= AUDIBLE
    ALARM  FRAME 1     CRIT=   9         MAJR=  12         MINR=   2
    ALARM  FRAME 2     CRIT=   0         MAJR=   0         MINR=   0
    ALARM  FRAME 3     CRIT=   0         MAJR=   0         MINR=   0
    ALARM  FRAME 4     CRIT=   0         MAJR=   0         MINR=   0
    ALARM  FRAME 5     CRIT=   0         MAJR=   0         MINR=   0
    ALARM  FRAME 6     CRIT=   0         MAJR=   0         MINR=   0
    ALARM  FRAME GPF   CRIT=   1         MAJR=   2         MINR=   1
    PERM. INH. ALARMS  CRIT=   0         MAJR=   0         MINR=   0
    TEMP. INH. ALARMS  CRIT=   0         MAJR=   0         MINR=   0
    ACTIVE ALARMS      CRIT=  10         MAJR=  14         MINR=   3
    TOTAL ALARMS       CRIT=  10         MAJR=  14         MINR=   3
    Command Completed.
;
```

chg-db

The **chg-db** commands copies the EAGLE 5 ISS TDM resident A-Port database tables during database backup, restore, and repair.

rept-stat-db

This command displays the status information for the EAGLE 5 ISS databases. This includes the level information for each DSM network card, and for the active and standby EPAP databases. It reports database exception status such as corrupted, incoherent, or inconsistent, as well as providing the birthdates and levels. It is enhanced to show the status of the PDB and RTDB databases if the A-Port feature is activated. For details about this command, refer to the *Commands Manual*.

inh-card / alw-card

The inh-card command is used to change the state of the card from in-service normal (IS-NR) to Out-of-Service Maintenance-Disabled (OOS-MT-DSBLD). A craftsperson then can test the DCM/LIM/ACM/ASM/DSM/GPSM-II/MIM card or physically remove it from the shelf.

The alw-card command is used to change the card from OOS-MT-DSBLD (out-of-service maintenance-disabled) to IS-NR (in-service normal) if the loading is successful.

Refer to the *Commands Manual* for details of these commands.

ent-card / rtrv-card / dlt-card

The **ent-card** command is used to add a card to the database. The card type and application specifies the function assigned to the card. This command verifies that if the A-Port feature is turned on, that the gpl that is being provisioned is a VSCCP gpl, and if it is, an error is displayed and the **ent-card** command is rejected.

The **rtrv-card** command is used to display the information about a card. This command displays the card type, the application the card is running, the linkset name, the signaling link code, and the ports.

The **dlt-card** command is used to remove a card entry from the system database.

Refer to the Commands Manual for details on using these commands.

ent-map / dlt-map

These commands are used to provision, remove, change, and report on the mate point code and subsystem number and its attributes. A mate point code defines an adjacent signaling point, which is considered the mated signal transfer point (STP) to the EAGLE 5 ISS.

These commands are updated to allow both ITU-N and ITU-I true point codes to be defined for the same SSN. Refer to the *Commands Manual* for details of these commands.

chg-sid / dlt-sid

These commands are used to change and report on the self-identification of the EAGLE 5 ISS. The self-identification identifies the EAGLE 5 ISS to other signaling points in the network. The **mnp** CPC type is used for A-Port. Refer to the *Commands Manual* for details of this command.

chg-gpl / act-gpl / rtrv-gpl / rept-stat-gpl / copy-gpl

The command-handling and scroll area output for these commands include the VSCCP GPL. Refer to the *Commands Manual* for details of these commands.

Here are samples of the reports produced by these commands.

```
chg-gpl:appl=vsccp:ver=101-3-0

    Command entered at terminal #3.
;
    tekelecstp 99-10-24 06:54:39 EAGLE 35.0.0
    VSCCP upload to 1114 completed
    VSCCP upload to 1116 completed
;

act-gpl:appl=vsccp:ver=101-3-0

    Command entered at terminal #3.
```

```
;
    tekelecstp 99-10-24 06:54:39 EAGLE 35.0.0
    VSCCP activate on 1114 completed
    VSCCP activate on 1116 completed
;

rtrv-gpl:appl=vsccp

    Command entered at terminal #3.
;
    tekelecstp 99-10-04 07:01:08 EAGLE 35.0.0
    GPL Auditing  ON

    APPL  CARD  RELEASE      APPROVED         TRIAL        REMOVE TRIAL
    VSCCP 1114  101-001-000  101-003-000      101-001-000  101-003-000
    VSCCP 1116  101-001-000  101-003-000      101-003-000  -----------
;

rept-stat-gpl:appl=vsccp

    Command entered at terminal #3.
;
    tekelecstp 99-10-04 12:55:50 EAGLE 35.0.0
    APPL  CARD      RUNNING            APPROVED      TRIAL
    VSCCP 1205      101-003-000 ALM    101-003-000   101-003-000
    VSCCP 1211      101-001-000 ALM+   101-003-000   -----------
    Command Completed.
;
```

inh-alm / unhb-alm

These commands allow both Port A and Port B to be specified for the dev=dlk. This allows alarms to be inhibited on the DSM ports. Refer to the *Commands Manual* for details of these commands.

rept-ftp-meas

This command provides on-demand measurements reporting capabilities. This command initiates generation and FTP transfer of a measurements report from the MCPM to the FTP server. The **`enttype=np`** supports A-Port measurements. The combination of this enttype and a report type determines which on-demand A-Port report is generated. Refer to the *Commands Manual* for details of this command.

This command provides on-demand measurements reporting capabilities. this command initiates generation and FTP transfer of a measurements report from the MCPM to the FTP server. The **`rept-ftp-meas`** command is modified to accept a new A-Port enttype. The combination of this enttype and a report type determines which on-demand A-Port report is generated. There are only two report types that are accepted in conjunction with enttype=eir: MTCH and MTCD. The A-Port enttype is only valid with the A-Port feature enabled. Refer to the *Commands Manual* for details of this command.

rept-meas

This command includes A-Port measurements in the output sent to the EAGLE 5 ISS Terminal. Refer to the *Commands Manual* for details of this command.

rept-stat-meas

Reports the status of the measurements subsystem including card location and state, Alarm level, and Subsystem State. Refer to the *Commands Manual* for details of this command.

rtrv-measopts / chg-measopts

The **`chg-measopts`** command provides the user with the capability to enable and disable measurement options related to the Measurements Platform.Use this command for the following functions:

- Enable the Measurements Platform collection function
- Turn on or turn off the 15 Minute Measurements collection function
- Enable or disable the automatic generation and FTP transfer of scheduled measurements reports to the FTP server
- Turn on or off the CLLI-based file name option for measurements reports files

The **`rtrv-measopts`** command displays the current state of the Measurements Platform options.

Refer to the *Commands Manual* for details of these commands.

4

A-Port Feature Activation

Introduction

CAUTION: For an in-service environment, contact Tekelec Technical Services (see "Customer Assistance" on page 1-9) before continuing to activate A-Port. For an environment that is not yet in-service, you may continue with this procedure.
The A-Port FAK cannot be turned on if any of the DSMs have less than 4 GB of memory installed. Refer to the *Dimensioning Guide for EPAP Advanced DB Features Technical Reference* for important information on the dimensioning rules and the DSM database capacity requirements.

This chapter identifies prerequisites for the A-Port feature activation procedure, an overview of the activation steps, and a matching number of detailed step descriptions to turn on the A-Port feature. The A-Port feature activation is performed at the EAGLE 5 ISS.

The A-Port features optimizes the use of subscriber numbers and number ranges in a IS-41 Mobile Network by providing a logical link between any Mobile Directory Number (MDN) and any International Mobile Station Identifier (IMSI). This feature allows subscribers to be moved easily from one Home Location Register (HLR) to another. The A-Port feature applies to ITU-N ANSI networks.

The A-Port feature, and other related features, are optional and can be purchased from Tekelec. If you are not sure whether you have purchased a specific feature, contact your Tekelec Sales or Account Representative.

CAUTION: Once a feature has been turned on with the enable-ctrl-feat command, it cannot be turned off. Since features may overwrite other features or create changes in the database, assure that you have a license and full technical support from Tekelec before turning on this or any feature.

The A-Port feature requires a DSM card running the VSCCP application. Systems with TSM cards running the SCCP application need to be upgraded to 4 GB DSM cards prior to turning on the A-Port feature.

Refer to the Dimensioning Guide for EPAP Advanced DB Features Technical Reference for important information on the dimensioning rules and the DSM database capacity requirements.Refer to the Dimensioning Guide for EPAP Advanced DB Features Technical Reference for important information on the dimensioning rules and the DSM database capacity requirements.

Procedures described in the remainder of this section apply only to the A-Port feature and can only be performed if the A-Port feature is enabled.

The following features are related to the A-Port feature (see your Tekelec Sales or Account Representative for additional information):

- Global Title Translation (GTT)
- Enhanced Global Title Translation (EGTT)
- Variable-Length Global Title Translation (VGTT)
- Mobile Number Portability Circular Route Prevention (MNPCRP)

Prerequisites

The A-Port feature activation assumes that at least one of the following features are provisioned.

- Global Title Translation (GTT),
- Enhanced Global Title Translation (EGTT)
- Variable-Length Global Title Translation (VGTT)

Refer to the Database Administration Manual - Features for provisioning procedures.

The A-Port feature activation assumes that the EPAP software is already configured; refer to EPAP Administration Manual, EPAP Software Configuration.

The NT serial number (**`ent-serial-num`**) must be entered and locked before A-Port can be enabled and turned-on.

The A-Port feature activation assumes that 4 Gb DSM cards need to be installed and TSM cards to be removed are identified:

- Note installed DSM card locations if any
- Note available odd-even card slots for DSM card installation
- Note installed TSM card locations;
- Note adjacent odd-even TSM card slot number positions for DSM card replacement

  NOTE: TSM cards use one card slot; DSM cards require two card slots, odd-even.
  The A-Port feature cannot be turned on until the TSM cards running the SCCP application are removed from the system

- Determine DSM card IP addresses and have them available during the activation procedure.

For in-service systems, schedule DSM card replacement in maintenance window that allows the reboot of DSM cards (**`init-card:loc=<DSM card location>`**) one at a time.

CAUTION: In an in-service environment and when replacing TSM cards with DSM cards, initialize one DSM card at a time. Verify its return to IS-NR state before initializing another DSM card. This precaution keeps cards in service and precludes an interruption of SCCP services.

For in-service systems with TSM cards running SCCP traffic, one DSM card must be installed in an available double-slot odd-even location and provisioned for VSCCP prior to inhibiting the SCCP card. The DSM card running the VSCCP application will take over the SCCP traffic (**`alw-card`**) once the SCCP card becomes inhibited

CAUTION: SCCP traffic redundancy will be lost if inhibiting two SCCP cards at a time with only one VSCCP card available in their place. Redundancy will be re-established once the two SCCP cards are replaced with a second VSCCP card.

For in-service systems that already have the G-Port, G-Flex and/or INP feature enabled, only perform steps 70 through 88 to turn on the A-Port feature. With the G-Port, G-Flex and/or INP feature enabled, the DSM cards already contain the RTDB database.

For new systems, DSM cards may be rebooted all at one time using the **`init-card:appl=vsccp`** command.

For new systems, GTT, EGTT, and VGTT features may be turned on prior to or immediately following the reboot of all DSM cards.

Feature Activation Overview

This section provides an overview of the A-Port feature activation procedure. The procedure is described in detail in section "Feature Activation Procedure" on page 4-12.

The feature activation consists of these sections:

- Configure system for HLR destinations in steps 1 through 28.
- Install DSM cards in available slots and configure for VSCCP in steps through 44.
- Replace TSM cards configured for SCCP with DSM cards configured for VSCCP and inhibit/remove any remaining SCCP cards in steps 45 through 69.
- Turn on and configure the A-Port feature in steps 70 through 88.

Steps 1 through 28 configure the system to be able to communicate with the system of the HLR database. The route to this database may already be configured. Perform these steps to verify that you have entered all HLR destinations for A-Port and make configuration changes as needed.

1. Display and note current system settings for point codes (PCs) and capability point codes (CPCs), destination point codes (DPCs), routes, and linksets using steps 2 through 7.
2. Use **`rtrv-sid`** command to display current PCs and CPCs
3. Use **`rtrv-dstn`** command to display current DPCs.
4. Use **`rtrv-rte`** command to display current route configurations.
5. Identify PCs and CPCs; determine new PC and CPC to be entered in step 9.
6. Use **`rtrv-stpopts`** command to display PC or CPC format if ITU-N network.
7. Use **`rtrv-map`** command to display PCs of mated applications in database; remove system PC from table if necessary (refer to *Database Administration Manual - Features*, Removing A Mated Application)

CAUTION: Changing a system's point code requires a system reboot using the `init-sys` command to fully implement the changes. The `init-sys` command causes a complete system reload and should be used only in an environment that is not in service. Using this command ensures the updated self identification information is loaded onto all cards, but does interrupt service.

8. Change PC, CPC, DPC, route, linkset, and LIM card configurations for the HLR database using steps 9 through 28.
9. Use **`chg-sid`** command to configure PC and CPC by network type.
10. Use **`init-sys`** command to initialize system if changes were made in step 9 to any **`pca/pci/pcn`** parameter.

CAUTION: The `init-sys` command causes a complete system reload and should be used only in an environment that is not in service. Using this command ensures the updated self identification information is loaded onto all cards, but does interrupt service.

When the `init-sys` command executes, the system does not retain the manually initiated state (for example, OOS-MT-DSBLD) for the signaling link, card, or terminal. After the command executes, the system attempts to bring all provisioned links, cards, and terminals on line, including those that were previously out of service. You will need to manually put each device back into its previous state after the system is back on line. Print or electronically capture the output of the `rept-stat-slk`, `rept-stat-card`, and `rept-stat-trm` commands for reference prior to issuing the `init-sys` command. To restore a device to its previous state, issue the appropriate inhibit/deactivate command listed in the <Italics>EAGLE 5 ISS Commands Manual in the Related Commands section for each of the above rept-stat commands.

11. Use **`rtrv-sid`** command to display new PC and CPC.
12. Use **`ent-dstn`** command to enter DPC for HLR destinations.
13. Use **`rtrv-dstn`** command to display new HLR DPC.
14. Use **`ent-ls`** command to enter linkset and assign DPC for HLR destinations.
15. Use **`rtrv-ls`** command to display new linkset and assigned DPC for HLR destinations.
16. Use **`ent-card`** command to enter LIM card(s) into database.
17. Use **`rtrv-card`** command to display new LIM card(s) in database.
18. Use **`ent-slk`** command to assign signaling link(s) to LIM card(s).
19. Use **`rtrv-slk`** command to display new signaling link(s) assigned to LIM card(s).
20. Use **`ent-rte`** command to assign route to new DPC.
21. Use **`rtrv-rte`** command to display route assigned to new DPC.
22. Use **`ent-map`** command to enter mated application into database.
23. Use **`rtrv-map`** command to display new mated application in database.
24. Use **`alw-card`** command to allow LIM card(s).
25. Use **`rept-stat-card`** command to display status of new LIM card(s) in database.
26. Use **`act-slk`** command to activate new signaling link(s) for LIM card(s).
27. Use **`rept-stat-slk`** command to display IS-NR status of signaling link(s).

28. Use **`rtrv-card`** command to confirm the new LIM card(s) and identify VSCCP cards (DSM cards running VSCCP application) and SCCP cards (TSM cards running SCCP application).

CAUTION: When adding DSM cards in an in-service environment, you must take care not to interrupt traffic. Before replacing SCCP cards with DSMs, first install a VSCCP card in an available odd-even double-slot prior to removing SCCP cards to make additional room for other DSM cards.

29. Install and configure DSM card(s) in available odd-even slots as needed using steps 30 through 44.
30. Install DSM card(s) in available odd-even slots and verify green IMT bus LEDs.
31. Use **`ent-card`** command to enter DSM card(s) as VSCCP card(s) into database.
32. Use **`rtrv-card`** command to display new VSCCP card(s) in database.
33. Use **`rtrv-ip-host`** command to display current IP host information in database.
34. Use **`ent-ip-host`** command to add host name and IP address for each VSCCP link.
35. Use **`rtrv-ip-host`** command to display changed IP host information.
36. Use **`chg-ip-card`** command to set local domain and IP router address if necessary.
37. Use **`rtrv-ip-card`** command to display changed VSCCP card information.
38. Use **`rtrv-ip-lnk`** command to display current link parameters associated with the VSCCP card.
39. Use **`chg-ip-lnk`** command to set the IP address port and speed associated with the VSCCP card.
40. Use **`rtrv-ip-lnk`** command to display changed link parameters.
41. Use **`alw-card`** command to boot DSM card in TSM emulation mode.
42. Use **`rept-stat-card`** command to display IS-NR status of VSCCP card.
43. Use pass command to test presence of EPAP hosts on network.
44. Repeat steps 30 through 43 to add all DSM cards (N+1) to be installed in available slots. Go to the next step to start replacing TSM cards.
45. Replace TSM card(s) with DSM cards if applicable, and add DSM card(s) to database using steps 46 through 68.
46. Use **`rtrv-card`** command to display TSM cards running the SCCP application (SCCP cards) in database.
47. Use **`rept-stat-card`** command to display SCCP cards in IS-NR status.

48. Use **`inh-card`** command to inhibit SCCP card(s)
49. Use **`rept-stat-card`** command to display OOS-MT-DSBLD status of SCCP card(s).
50. Use **`dlt-card`** command to delete SCCP card(s) from database.
51. Use **`rtrv-card`** command to verify removal of SCCP cards from database.
52. Remove first TSM card from shelf.
53. Remove second TSM card from shelf.
54. Install DSM card in shelf and verify green IMT bus LEDs.
55. Use **`ent-card`** command to enter DSM card as VSCCP card into database.
56. Use **`rtrv-card`** command to display new VSCCP card in database.
57. Use **`rtrv-ip-host`** command to display IP host information in database.
58. Use **`ent-ip-host`** command to add host name and IP address for VSCCP link.
59. Use **`rtrv-ip-host`** command to display changed IP host information in database.
60. Use **`chg-ip-card`** command to set local domain and IP router address if necessary.
61. Use **`rtrv-ip-card`** command to display changed VSCCP card information.
62. Use **`rtrv-ip-lnk`** command to display current link parameters associated with VSCCP card.
63. Use **`chg-ip-lnk`** command to set the IP address port and speed associated with VSCCP card.
64. Use **`rtrv-ip-lnk`** command to display changed link parameters associated with the VSCCP card.
65. Use **`alw-card`** command to boot DSM card in TSM emulation mode.
66. Use **`rept-stat-card`** command to display IS-NR status of VSCCP card.
67. Use **`pass`** command to test presence of EPAP hosts on network.
68. Repeat steps 46 through 67 to replace all adjacent TSM cards identified in the prerequisites and to be replaced with DSM cards.
69. Repeat steps 48 through 52 to inhibit any remaining TSM cards running the SCCP application and remove them from database and shelf.

NOTE: The A-Port feature cannot be turned on until TSM cards running the SCCP application are removed from the system.

CAUTION: Contact Tekelec Technical Services at this point for assistance in completing this A-Port activation procedure (see "Customer Assistance" on page 1-9). Do not proceed without consulting with Tekelec Technical Services.

70. Turn on and configure the A-Port feature using steps 71 through 88.
71. Use **`enable-ctrl-feat`** command to enable the A-Port feature.
72. Use **`chg-ctrl-feat`** command to turn on the A-Port feature.

    NOTE: Step 75 through 83 describe the commands that administer the A-Port protocol flow to support:

    — A-Port LOCREQ (Ported-out MDNs)

    — A-Port LOCREQ (Foreign MDNs not known to be ported)

    — A-Port Message Relay (Ported-in, non-ported MDNs)

73. Use **`enable-ctrl-feat`** command to enable the optional MTP MSGS for SCCP Apps feature, if required.
74. Use **`chg-ctrl-feat`** command to turn on the optional MTP MSGS for SCCP Apps feature, if required.
75. Use **`chg-stpopts`** command to enter default country code (CC) and default network destination code (NDC) if handling non-international numbers.
76. Use **`rtrv-stpopts`** command to verify changes of CC and NDC.
77. Use **`chg-is41opts`** command to change IS41 options.
78. Use **`rtrv-is41opts`** command to verify changes to IS41 options.
79. Use the **`ent-homern`** command to enter any Home RNs that are prefixed to DNs for incoming A-Port MR messages.
80. Use **`rtrv-homern`** command to verify routing number prefixes.
81. Use the **`rtrv-srvsel`** command to read the service selector combinations.
82. Use **`ent-srvsel`** command to enter MNP service selectors.
83. Use **`rtrv-srvsel`** command to verify changes to MNP service selectors

    CAUTION: When you have an in-service environment and you are replacing TSM cards with DSM cards, initialize one DSM card at a time. Verify its return to IS-NR state before initializing another card. This precaution keeps cards in service and precludes an interruption of SCCP services.

84. Use **`init-card:loc=<DSM card>`** command to load RTDB, OAM, GPL, and GTT data to VSCCP card.
85. Use **`rept-stat-card`** command to display IS-NR status of VSCCP card.
86. Repeat steps 84 and 85 to reboot each DSM card.

    NOTE: Once the A-Port feature is turned on, always boot the DSM cards with the **`init-card:loc=`**<DSM card location> command.

87. Use **`chg-sccp-serv:serv=mnp:state=online`** to set the MNP service to online.
88. Confirm success of activation procedure with **`rept-stat-sccp`**, **`rept-stat-mps`**, and **`rept-stat-db:display=all`** commands.

EPAP can now administer A-Port entity objects and A-Port subscribers. For the details about performing these actions, refer to the EPAP Administration Manual.

The detailed A-Port activation procedure is described next.

Feature Activation Procedure

CAUTION: Refer to the *Dimensioning Guide for EPAP Advanced DB Features Technical Reference* for important information on the dimensioning rules and the DSM database capacity requirements.

Procedure 4-1.

1. Before changing a true point code (PC) and adding a capability point code (CPC) for the A-Port feature, display the current values of the self-identification configuration (shown in step 2), the destination point codes (DPCs) (shown in step 3), and the routes and linksets assigned to the DPCs (shown in step 4). The A-Port feature applies to ITU-N ANSI networks.

2. Display the current self identification of the system (PC and CPC) using the **`rtrv-sid`** command. This is an example of the possible output:

```
tklc1081301 06-10-05 11:43:02 EST  EAGLE5 36.0.0

      PCA             PCI          PCN                CLLI        PCTYPE
      006-010-006     5-010-5      5-010-5-aa         tklc1081301   ANSI

      CPCA (MNP)
      006-012-000

      CPCI (MNP)
      5-012-0

      CPCN (MNP)
      5-012-0-aa        5-012-0-ms

      CPCN24 (MNP)
      006-012-000
;
```

This example retrieved all capability point codes with **`cpctype=mnp`**.

3. Display the current destination point codes in the destination point code table (**dpc/dpca**) using the **rtrv-dstn** command. This is an example of the possible output:

```
tklc1191001 06-05-11 08:02:13 EST  EAGLE5 36.0.0
    DPCA          CLLI        BEI ELEI   ALIASI          ALIASN/N24  DOMAIN
    008-030-008   stpa038a    no  --- ----------      --------------   SS7
    006-010-006   stpc016a    no  --- ----------      --------------   SS7
    042-052-012   tklca4212a2 no  ---    4-075-2         4-075-2-aa    SS7
    042-054-012   tklca4212a4 no  ---    4-077-2         4-077-2-aa    SS7
    042-056-012   tklca4212a6 no  ---    4-079-2         4-079-2-aa    SS7
    255-*-*       mobrncr001a --- --- ----------      --------------   SS7
    255-225-*     mobrncr002a no  no  ----------      --------------   SS7
    225-225-199   mobrrte001a no  ---    7-255-7         7-255-7-aa    SS7

    DPCI          CLLI        BEI ELEI   ALIASA          ALIASN/N24  DOMAIN
    7-030-7       stpa037i    no  --- --------------  --------------   SS7
  s-7-030-7       ----------- no  --- --------------  --------------   SS7
    5-010-5       stpc015i    no  --- --------------  --------------   SS7

    DPCN24        CLLI        BEI ELEI   ALIASA          ALIASI      DOMAIN
    008-030-008   stpa038c    no  --- --------------  ----------       SS7
    006-010-006   stpc016c    no  --- --------------  ----------       SS7
    006-090-006   stpd096c    no  --- --------------  ----------       SS7
    006-132-002   sc3a040i00  no  --- --------------  ----------       SS7

 DESTINATION ENTRIES ALLOCATED:   6000
     FULL DPC(s):                  664
     EXCEPTION DPC(s):            5272
     NETWORK DPC(s):                 1
     CLUSTER DPC(s):                 1
     TOTAL DPC(s):                5938
     CAPACITY (% FULL):             99%
 ALIASES ALLOCATED:               12000
     ALIASES USED:                1185
     CAPACITY (% FULL):             10%
 X-LIST ENTRIES ALLOCATED:         500
```

The example shows a truncated display of all provisioned destinations.

4. Display the current route configuration using the **rtrv-rte** command. This is an example of the possible output:

```
rlghncxa03w 01-03-07 11:43:04 GMT  EAGLE 36.0.0
DPCA          ALIASI     ALIASN      CLLI    LSN         RC APCA
-----------   -------    -------     -----   --------   -- -----------

DPCI        ALIASN      ALIASA      CLLI     LSN         RC APCI
2-100-1     121111      --------    idp1     ls100001    10 1-234-5
                                             ls100002    10 1-234-6
                                             ls100003    20 1-234-7
                                             ls100004    30 1-234-1
                                             ls100005    40 1-234-2
                                             ls100006    50 1-234-3

DPCN        ALIASA      ALIASI      CLLI     LSN         RC APCN
21111       --------    0-001-1     ndp1     ls200001    10 11111
                                             ls200002    10 11112
                                             ls200003    20 11113
                                             ls200004    30 11114
                                             ls200005    40 11115
                                             ls200006    50 11116
```

5. If the system's point code **(pc/pca)** or capability point code **(cpc/cpca)** to be configured in this procedure is shown in steps 2, 3, or 4, choose another point code to configure with this procedure (step 9).

---

6. If configuring the system point code or capability point code **(pc** or **cpca)** of an ITU-N ANSI network, view the current value of the ANSI point code format. Otherwise continue with step 7.

   Enter the **rtrv-stpopts** command and specify the point code format option **npcfmti**. The **npcfmti** option identifies how the point code is entered into the database and how it is displayed in any outputs. The value is shown in the NPCFMTI field. This is an example of the possible output:

```
rlghncxa03w  01-03-17 16:02:05 GMT  EAGLE 36.0.0
STP OPTIONS
-----------------------
MTPT31CTL            1
MTPLTI             yes
MTPLTCTDPCQ          3
MTPLTST          10000
MTPXLQ             500
MTPXLET           0100
MTPXLOT            90%
MTPDPCQ           1750
TFATFRPR          1000
MTPRSI             yes
MTPRSIT           5000
MTPLPRST           yes
MTPT10ALT        30000
SLSCNV           perls
UIMRD              yes
CRITALMINH          no
DISPACTALMS         no
NPCFMTI        4-4-4-2
DEFCC               49
DEFNDC             177
DSMAUD              on
```

   If you wish to change the format of the ANSI point code, go to the "ANSI Point Code" section in the *EAGLE 5 ISS Database Administration Manual - SS7* . Then continue with step 7.

---

7. Display the mated applications in the database using the **rtrv-map** command. These are examples of possible output:

```
   rlghncxa03w 04-01-07 11:43:04 EST  EAGLE 36.0.0
    MAP TABLE IS   1 % FULL    (1 of 3000)

       PCA          SSN  RC MPCA        SSN MATERC MULT SRM MRC GRP NAME
SSO
       002-002-002   10  10                              YES YES -------- ON
                              002-002-003  20    10  SHR  YES YES -------- ON
```

   If the system's point code is shown in the **rtrv-map** command output (in the **PCA**, **PCI**, **PCN**, **MPCA**, **MPCI**, or **MPCN** fields), remove the system's point code from the mated application table. Refer to procedure "Removing a Mated Application" in the *EAGLE 5 ISS Database Administration Manual - Features*.

If the system's point code or capability point code is a destination point code of a route, select a point code that is not the destination point code of a route (see output of the **rtrv-rte** command in step 4) and not in the destination point code table (see output of the **rtrv-dstn** command in step 3).

---

8. Change PC, CPC, DPC, route, linkset, and LIM card configurations for the HLR database using steps 9 through 28.

CAUTION: Changing a system's point code requires a system reboot using the `init-sys` command to fully implement the changes. The `init-sys` command causes a complete system reload and should be used only in an environment that is not in service. Using this command ensures the updated self identification information is loaded onto all cards but does interrupt service.

9. Configure the system's point code (**pc/pca**) and capability point code (**cpc/cpca**) by network type using the **chg-sid** command. For example, enter one of these commands:

```
chg-sid:pc=002-002-002:pca=003-002-002
```

```
chg-sid:cpc=10-20-30:cpca=20-20-30
```

where:

pc/pca – The point code used to uniquely identify the system.

cpc/cpca – The point code used by the SS7 protocol to identify a group of functionally related EAGLE 5 ISSs in the signaling network to which the EAGLE 5 ISS belongs.

After successful completion of this command, the system returns the following output:

```
rlghncxa03w 01-03-07 00:57:31 GMT EAGLE 36.0.0
CHG-SID: MASP A - COMPLTD
```

When any of the **pci/pcn** parameters have changed, the system needs to be reinitialized. The following caution message is displayed:

```
CAUTION: SYSTEM SITE ID HAS BEEN CHANGED, MANUAL RE-INITIALIZATION IS NEEDED
```

CAUTION: The `init-sys` command causes a complete system reload and should be used only in an environment that is not in service. Using this command ensures the updated self identification information is loaded onto all cards, but does interrupt service.

When the `init-sys` command executes, the system does not retain the manually initiated state (for example, OOS-MT-DSBLD) for the signaling link, card, or terminal. After the command executes, the system attempts to bring all provisioned links, cards, and terminals on line, including those that were previously out of service. You will need to manually put each

device back into its previous state after the system is back on line. Print or electronically capture the output of the `rept-stat-slk`, `rept-stat-card`, and `rept-stat-trm` commands for reference prior to issuing the `init-sys` command. To restore a device to its previous state, issue the appropriate inhibit/deactivate command listed in the <Italics>EAGLE 5 ISS Commands Manual in the Related Commands section for each of the above `rept-stat` commands.

10. Reinitialize the system by entering the **`init-sys`** command if changes were made in step 9 to any **`pca/pci/pcn`** parameter.

NOTE: The `init-sys` command must be entered twice within 30 seconds for the system to re-initialize. If the `init-sys` command is not executed twice within 30 seconds, the attempt to re-initialize the system is aborted.

When the **`init-sys`** command is first entered, this message should appear.

```
rlghncxa03w 01-03-07 00:57:31 GMT EAGLE 36.0.0
CAUTION: This command causes a complete system reload, and
will result in traffic loss.
Re-enter command within 30 seconds to confirm.
```

When the **`init-sys`** command is re-entered within the 30 second time limit, this message should appear.

```
rlghncxa03w 01-03-07 00:57:31 GMT EAGLE 36.0.0
Init System command issued at terminal #3
```

From the time that the **`init-sys`** command is accepted, you must wait approximately two minutes before you can perform step 11 (logging into the system). If the terminal is in the VT-100/VT-320 mode, the terminal display will be refreshed with non-zero alarm counts. During this two-minute interval, an intermediate screen refresh occurs, which is caused by the MASP's role change from active to standby and from standby to active. This screen refresh is typically a partial refresh and the alarm indicators are set to zero.

If you are logged into the system in the KSR mode, the only response you will receive of being able to log into the system is the message 'UAM 0009, MASP became active'. UAM 0009 could be issued twice due to a possible transient MASP role change (switching from active to standby). Following the execution of the **`init-sys`** command, the MASP that was active before the **`init-sys`** command was entered will be the active MASP again when the system has finished reinitializing.

11. Verify the SID changes using the **rtrv-sid** command. This is an example of the possible output:

```
 tekelecstp 04-06-14 15:18:11 EST  EAGLE 36.0.0
     PCA             PCI          PCN                CLLI           PCTYPE
     003-002-002     1-023-4      01234              tekelecstp     ANSI
                     s-1-023-4    s-01234

       CPCI
     s-4-056-0

      CPCN
     s-00456
```

---

12. Enter a destination point code for the HLR location in the Destination Point Code table by network type using the **ent-dstn** command. For example, enter one of these commands:

ent-dstn:dpc=002-100-002

ent-dstn:dpca=002-111-002

where:

dpci/dpcn – The destination point code being added to the database

The system returns this message:

```
rlghncxa03w 01-03-17 15:35:05 GMT EAGLE 36.0.0
Destination table is (40 of 4000) 1% full
ENT-DSTN: MASP A - COMPLTD
```

---

13. Verify the changes using the **rtrv-dstn** command and specifying the DPC that was entered in step 12. For example, enter one of these commands:

rtrv-dstn:dpci=002-100-002

rtrv-dstn:dpca=002-111-002

This is an example of the possible output **for DPC**s.

```
rtrv-dstn:dpc=002-100-002

RLGHNCXA03W 01-03-30 21:16:37 GMT EAGLE 36.0.0
DPC         CLLI        BEI ELEI  ALIASA      ALIASN          DOMAIN
002-100-002 --------    no  ---   --------    002-111-002     SS7

            SPC          NCAI
            -----------  no

Destination table is (20 of 2000) 1% full
```

This is an example of the possible output **for DPCAs**.

```
rtrv-dstn:dpcn=002-111-002

RLGHNCXA03W 01-03-30 21:16:37 GMT EAGLE 36.0.0
DPCA              CLLI        BEI ELEI  ALIASA       ALIASI       DOMAIN
002-111-002       --------    no  ---   --------     002-100-002  SS7

            SPC          NCAI
            -----------  no
```

```
Destination table is (20 of 2000) 1% full
```

14. Enter a linkset with the **ent-ls** command, and assign it to the destination point code by network type. For example, enter one of these commands:

ent-ls:lsn=ls400001:apc=002-200-002:lst=c

ent-ls:lsn=ls500001:apca=002-112-002:lst=c

where:

lsn – The name of the linkset

apc/apca – Adjacent point code – the point code identifying the node that is next to the system

lst – The linkset type of the specified linkset

After successful completion of this command, the system returns the following message:

```
RLGHNCXA03W 01-03-17 16:23:21 GMT  EAGLE 36.0.0
Link set table is ( 114 of 1024)  12% full
ENT-LS: MASP A - COMPLTD
```

15. Verify the changes using the **rtrv-ls** command and specifying the linkset name. For example, enter one of these commands:

rtrv-ls:lsn=ls400001

rtrv-ls:lsn=ls500001

For lsn400001, the system returns output similar to the following:

```
                                L3T SLT               GWS GWS GWS
LSN          APC    (SS7)  SCRN  SET SET BEI LST LNKS ACT MES DIS SLSCI NIS
ls400001     002-200-002   scr1  1   1   yes a   1    off off off ---   off

           CLLI         TFATCABMLQ  MTPRSE  ASL8
           -----------  --          ---     ----

           IPGWAPC MATELSN  IPTPS   LSUSEALM  SLKUSEALM
           no      ---------- ---     ---        ---

                                   L2T         L1                PCR  PCR
           LOC   PORT SLC TYPE     SET  BPS    MODE TSET  ECM   N1   N2
           1205  a    0   LIMV35   1    56000  ---  ---   BASIC ---  -----
Link set table is (114 of 1024) 12% full
```

For lsn500001, the system returns output similar to the following:

```
                                L3T SLT                GWS GWS GWS
LSN          APC    (SS7)  SCRN  SET SET BEI LST LNKS ACT MES DIS SLSCI NIS
ls500001     002-112-002   scr3  1   1   yes a   1    off off off ---   off

           CLLI         TFATCABMLQ  MTPRSE  ASL8
           -----------  --          ---     ----

           IPGWAPC MATELSN  IPTPS   LSUSEALM  SLKUSEALM
           no      ---------- ---     ---        ---

                                L2T         L1                PCR  PCR
           LOC   PORT SLC TYPE     SET  BPS    MODE TSET  ECM   N1   N2
           1205  a    0   LIMV35   1    56000  ---  ---   BASIC ---  -----
Link set table is (114 of 1024) 12% full
```

16. Add the LIM cards to the database using the **`ent-card`** command. For this example, enter these commands:

`ent-card:loc=1105:type=limocu:appl=ccs7itu`

`ent-card:loc=1106:type=limocu:appl=ccs7itu`

where:

`loc` - specifies the slot number for the card.

`type` - specifies that the card is a LIMOCU card.

`appl` - specifies that the application is CCS7ITU.

After successful completion of this command, the system returns the following message:

```
RLGHNCXA03W 01-03-12 09:12:36 GMT  EAGLE 36.0.0
ENT-CARD: MASP A - COMPLTD
```

17. Verify the changes using the **`rtrv-card`** command with the card location specified. For this example, enter these commands:

`rtrv-card:loc=1105`

`rtrv-card:loc=1106`

These are examples of the possible output:

```
RLGHNCXA03W 01-03-30 09:12:36 GMT EAGLE 36.0.0
CARD   TYPE          APPL      PORT A LSET (SLC)   PORT B LSET (SLC)
1105   LIMOCU       CCS7ITU   --------    (--)    --------    (--)


RLGHNCXA03W 01-03-30 09:12:36 GMT EAGLE 36.0.0
CARD   TYPE          APPL      PORT A LSET (SLC)   PORT B LSET (SLC)
1106   LIMOCU       CCS7ITU   --------    (--)    --------    (--)
```

18. Assign signaling links to the LIM cards using the **`ent-slk`** command. For example, enter these commands:

`ent-slk:loc=1105:port=a:lsn=ls400001:slc=0:l2tset=1`

`ent-slk:loc=1106:port=a:lsn=ls500001:slc=0:l2tset=1`

where:

loc – The card location of the LIM that the SS7 signaling link will be assigned to.

port – The port on the card specified in the loc parameter.

lsn – The name of the linkset that will contain the signaling link.

slc – The signaling link code. The slc must be unique within the linkset. It must be the same at both the system location and the distant node.

l2tset – The level 2 timer set table. A signaling link may be assigned to any of the twenty tables.

After successful completion of this command, the system returns the following message:

```
RLGHNCXA03W 01-03-07 08:29:03 GMT  EAGLE 36.0.0
ENT-SLK: MASP A - COMPLTD
```

Signaling links are the only elements in the database directly supported by a hardware device. When a link is added to a linkset, the link remains in the state OOS-MT-DSBLD (out of service maintenance disabled) until it is activated; see step 26.

---

19. Verify the changes using the **rtrv-slk** command, specifying the card location and port of the signaling link entered in step 18.

rtrv-slk:loc=1105:port=a

rtrv-slk:loc=1106:port=a

This is an example of the possible output.

```
RLGHNCXA03W 01-03-19 21:16:37 GMT EAGLE 36.0.0
                                  L2T         L1                PCR  PCR
LOC   PORT LSN       SLC TYPE     SET  BPS    MODE TSET  ECM   N1   N2
1105  A    ls400001  0   LIMOCU   1    56000  ---  ---   BASIC ---  -----

RLGHNCXA03W 01-03-19 21:16:37 GMT EAGLE 36.0.0
                                  L2T         L1                PCR  PCR
LOC   PORT LSN       SLC TYPE     SET  BPS    MODE TSET  ECM   N1   N2
1106  A    ls500001  0   LIMOCU   1    56000  ---  ---   BASIC ---  -----
```

---

20. Add a route for the new DPC by network type using the **ent-rte** command. For example, enter one of these commands:

ent-rte:dpc=002-100-002:lsn=ls400001:rc=10

ent-rte:dpca=002-111-002:lsn=ls500001:rc=10

where:

dpc/dpca – Destination point code of the node that the traffic is bound for

lsn – The name of the linkset that will carry the traffic bound for the node specified by the destination point code.

rc – The relative cost (priority) for this route.

After successful completion of this command, the system returns the following message:

```
RLGHNCXA03W 01-03-07 08:28:30 GMT  EAGLE 36.0.0
ENT-RTE: MASP A - COMPLTD
```

21. Verify the changes using the **rtrv-rte** command and specifying the destination point code of the route. This is an example of the possible output:

```
rlghncxa03w 01-03-07 11:43:04 GMT  EAGLE 36.0.0
DPCA         ALIASI      ALIASN      CLLI        LSN      RC APCA
-----------  -------     -------     -----       -------- -- -----------

DPC          ALIASN      ALIASA       CLLI       LSN      RC APC
002-100-001  121111      240-111-111  idp1       ls100001 10 1-234-5
                                                 ls100002 10 1-234-6
                                                 ls100003 20 1-234-7
                                                 ls100004 30 1-234-1
                                                 ls100005 40 1-234-2
                                                 ls100006 50 1-234-3
002-100-002                     121111      240-111-111   idp1
ls400001 10 1-200-2

DPCA        ALIASA      ALIASI        CLLI       LSN      RC APCA
21111       011-222-111 0-001-1       ndp1       ls200001 10 11111
                                                 ls200002 10 11112
                                                 ls200003 20 11113
                                                 ls200004 30 11114
                                                 ls200005 40 11115
                                                 ls200006 50 11116
21112       011-222-111 0-001-1       ndp1       ls500001 10 11122
```

22. Add a mated application to the database by network type using the **ent-map** command. For this example, enter this command:

ent-map:pci=2-100-1:ssn=12:rc=20:mpci=3-200-1:mssn=50 :materc=99:grp=grp03

ent-map:pcn=11112:ssn=12:rc=10:mpcn=11114:mssn=250:materc=99 :grp=grp07

where:

pci/pcn – The point code of the primary signaling point that is to receive the message.

ssn – Subsystem number – the subsystem address of the primary point code that is to receive the message.

rc – The relative cost

mpc/mpca/mpci/mpcn – The point code of the backup signaling point that is to receive the message.

mssn – Mate subsystem number – the subsystem address of the backup point code that is to receive the message.

materc – Mate relative cost.

grp – The name of the concerned signaling point code group that contains the point codes that should be notified of the subsystem status. This parameter applies to both RPCs/SSNs.

When each of these commands have successfully completed, this message should appear.

```
RLGHNCXA03W  01-03-07 00:28:31 GMT EAGLE 36.0.0
ENT-MAP:  MASP A - COMPLTD
```

23. Verify the changes using the **rtrv-map** command. These are examples of possible output.

```
rlghncxa03w 01-03-07  11:43:04  GMT  EAGLE 36.0.0
PCN            SSN  RC  MPCN          MSSN MATERC SRM MRC GRP NAME
11111            5  20  12347         250      99 --- --- GRP07
11112           12   0  12347         250      99 --- --- GRP07

rlghncxa03w 01-03-07  11:43:04  GMT  EAGLE 36.0.0
PCI            SSN  RC  MPCI          MSSN MATERC SRM MRC GRP NAME
1-100-1          5   0  3-200-1       250      99 --- --- GRP03
2-100-1         12  20  3-200-1        50      99 --- --- GRP03
```

24. Allow the LIM cards that were entered in step 16 by using the **alw-card** command. For example, enter these commands:

alw-card:loc=1105

alw-card:loc=1106

This message appears:

```
RLGHNCXA03W  01-03-30 21:20:37 GMT EAGLE 36.0.0
Card has been allowed.
```

25. Verify the in-service normal (IS-NR) status of the cards using the **rept-stat-card** command. This is an example of the possible output:

```
RLGHNCXA03W 01-03-27 16:43:42 GMT  EAGLE 36.0.0
CARD  VERSION            TYPE    APPL      PST           SST       AST
1101  100-000-00003-000  TSM     SCCP      IS-NR         Active    ---
1102  100-000-00003-000  TSM     SCCP      IS-NR         Active    ---
1103  100-000-00003-000  ACMENET STPLAN    IS-NR         Active    ---
1104  100-000-00003-000  ACMENET GLS       IS-NR         Active    ---
1105  100-000-00003-000  LIMOCU  CCS7ITU   IS-NR         Active    ---
1106  100-000-00003-000  LIMOCU  CCS7ITU   IS-NR         Active    ---
1113  100-000-00002-000  MCAP    OAM       IS-NR         Active    ---
1114  100-000-00002-000  TDM               IS-NR         Active    ---
1115  100-000-00002-000  MCAP    OAM       IS-NR         Active    ---
1116  100-000-00002-000  TDM               IS-NR         Active    ---
1117  100-000-00002-000  MDAL              IS-NR         Active    ---
1201  100-000-00003-000  LIMDS0  SS7ANSI   IS-NR         Active    ---
1202  100-000-00002-000  LIMV35  SS7GX25   IS-NR         Active    ---
1203  100-000-00003-000  LIMV35  SS7ANSI   IS-NR         Active    ---
1204  100-000-00003-000  LIMATM  ATMANSI   IS-NR         Active    ---
1205  100-000-00001-000  DCM     IPLIM     IS-NR         Active    ---
1207  100-000-00001-000  DCM     SS7IPGW   IS-NR         Active    ---
1303  100-000-00001-000  DCM     IPLIM     IS-NR         Active    ---
1305  100-000-00001-000  DCM     SS7IPGW   IS-NR         Active    ---
```

26. Activate the signaling links entered in step 18 using the **act-slk** command. For example, enter these commands

act-slk:loc=1105:port=a

act-slk:loc=1106:port=a

The link changes its state from *OOS-MT-DSBLD* (out-of-service maintenance-disabled) to *IS-NR* (in-service normal).

The output confirms the activation.

```
RLGHNCXA03W 01-03-07 11:11:28 GMT EAGLE 36.0.0
Activate Link message sent to card
```

27. Verify the in-service normal (IS-NR) status of the signaling link using the **rept-stat-slk** command. For example, enter these commands:

rept-stat-slk:loc=1105

rept-stat-slk:loc=1106

This message should appear

```
RLGHNCXA03W 01-03-30 21:16:37 GMT EAGLE 36.0.0
SLK      LSN        CLLI       PST     SST     AST
1105,A  ls400001  ---------- IS-NR   Avail   ----
Command Completed.

RLGHNCXA03W 01-03-30 21:16:37 GMT EAGLE 36.0.0
SLK      LSN        CLLI       PST     SST     AST
1106,A  ls500001  ---------- IS-NR   Avail   ----
Command Completed
```

28. Display the new LIM cards in the database using the **rtrv-card** command. This is an example of the possible output:

```
RLGHNCXA03W 01-03-15 16:34:56 GMT EAGLE 36.0.0
CARD   TYPE          APPL      PORT A LSET (SLC)   PORT B LSET (SLC)
1101   TSM           SCCP      --------    (--)    --------    (--)
1102   TSM           SCCP      --------    (--)    --------    (--)
1103   ACMENET       STPLAN    --------    (--)    --------    (--)
1104   ACMENET       GLS       --------    (--)    --------    (--)
1105   LIMOCU        CCS7ITU   ls400001    (00)    --------    (--)
1106   LIMOCU        CCS7ITU   ls500001    (00)    --------    (--)
1113   MCAP          OAM
1114   TDM
1115   MCAP          OAM
1116   TDM
1117   MDAL
1201   LIMDS0        SS7ANSI   lsn1        (00)    lsn2        (01)
1202   LIMV35        SS7GX25   lsngwy      (00)    --------    (--)
1203   LIMV35        SS7ANSI   lsn2        (00)    lsn1        (01)
1204   LIMATM        ATMANSI   atmgwy      (00)    --------    (--)
1205   DCM           IPLIM     ipgwy1      (00)    ipgwy3      (01)
1207   DCM           SS7IPGW   ipgwy2      (00)    --------    (--)
1303   DCM           IPLIM     ipgwy1      (00)    ipgwy3      (01)
1305   DCM           SS7IPGW   ipgwy4      (00)    --------    (--)
```

Determine a location where the double-slot DSM card can be inserted. The output shows slots 1107 and 1108 are not occupied. Also determine adjacent (odd-even slots) SCCP cards for later TSM card replacements.

CAUTION: When adding DSM cards in an in-service environment, you must take care not to interrupt traffic. Before replacing SCCP cards with DSMs, first install a VSCCP card in an available odd-even double-slot prior to removing SCCP cards to make additional room for other DSM cards.

29. Install and configure DSM card(s) as needed in available odd-even slots using steps 30 through 44. For our example, install a DSM card in slots 1107 and 1108.

30. Install the DSM card in slots 1107 and 1108. The DSM card requires two slots and must be installed in an odd slot with an adjacent empty even slot on its right side.

a. Open the ejector levers on the DSM card. Carefully align the card's edges with the top and bottom card guides. Then push the card along the length of the card guides until the rear connectors on the card engage the mating connectors on the target shelf backplane.

b. Press the left edge of the card's faceplate using constant pressure until you feel the card's progress cease.

Do not impact the faceplate in order to mate the connectors. Any impact to the card's faceplate can damage the faceplate, the pins, or the connectors.

c. Push in the top and bottom inject/eject clamps. This locks the card in place and ensures a strong connection with the pins on the target shelf backplane.

Figure 4-1. Push in Inject/Eject Clamp

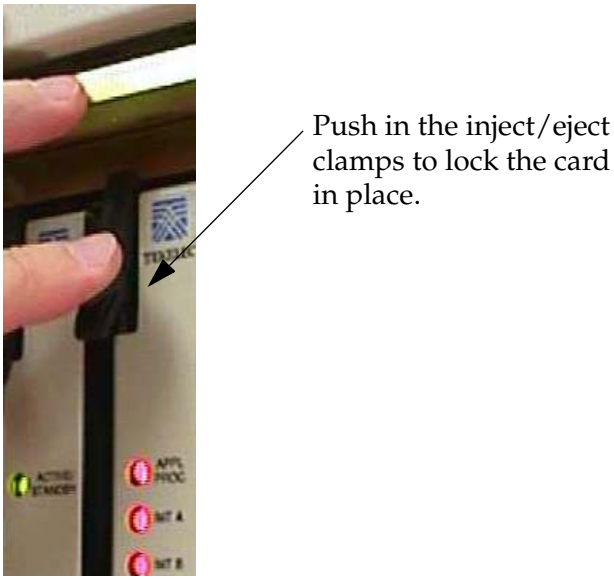

d. Verify that both IMT bus LEDs are green.

e. Install the cabling required to connect the DSM card to the MPS. Refer to the Installation Manual for details

---

31. Add the DSM card to the database and configure it as VSCCP card using the ent-card command. For this example, enter this command.

```
ent-card:loc=1107:type=dsm:appl=vsccp
```

where:

loc - specifies the slot number for the card. The slot number must be an odd number.

type - specifies that the card is a DSM card.

appl - specifies that the application is VSCCP.

After successful completion of this command, the system returns the following message:

```
RLGHNCXA03W 01-03-12 09:12:36 GMT  EAGLE 36.0.0
ENT-CARD: MASP A - COMPLTD
```

32. Verify the VSCCP card using the **rtrv-card** command with the card location specified. For this example, enter this command:

rtrv-card:loc=1107

This is an example of the possible output:

```
RLGHNCXA03W 01-03-30 09:12:36 GMT EAGLE 36.0.0
CARD   TYPE          APPL      PORT A LSET (SLC)   PORT B LSET (SLC)
1107   DSM           VSCCP     --------    (--)    --------    (--)
```

33. Display the current IP host information in the database by entering the **rtrv-ip-host** command. This is an example of the possible output:

```
RLGHNCXA03W 01-03-30 21:17:37 GMT EAGLE 36.0.0

IPADDR          HOST
192.1.1.32      KC_HLR2
192.1.1.50      DN_MSC1
192.1.1.52      DN_MSC2
```

34. Add the host name and IP address for each VSCCP link using the ent-ip-host command. For example, enter these commands:

ent-ip-host:host=vsccp_1107_a:ipaddr=192.168.122.1

ent-ip-host:host=vsccp_1107_b:ipaddr=192.168.123.1

where:

host - specifies the host name. Each VSCCP link must be specified separately.

ipaddr - specifies the IP network address for each EPAP. The first three octets of the IP address must be the same as MPS A and B ports, respectively. The fourth octet identifies the DSM card and must have a a unique octet identifier for the card's IP address; we recommend numbering the DSM cards sequentially, using values 1 to 25. (This example shows the assignment of the first DSM card.)

After successful completion of this command, the system returns the following message:

```
RLGHNCXA03W 01-03-30 21:18:37 GMT EAGLE 36.0.0
ENT-IP-HOST: MASP A - COMPLTD
```

35. Verify the new IP host information in the database by entering the **rtrv-ip-host** command. The following is an example of the possible output.

```
RLGHNCXA03W 01-03-30 21:19:37 GMT EAGLE 36.0.0

IPADDR          HOST
192.1.1.32      KC_HLR2
192.1.1.50      DN_MSC1
192.1.1.52      DN_MSC2
192.168.122.1   VSCCP_1107_A
192.168.123.1   VSCCP_1107_B
```

NOTE: Most A-Port customer private networks do not require setting up a default router for the DSM card. However, if your network configuration does require a default router to connect the DSM card communication to the EPAP, then only one default router is assignable to each DSM card. Assign the default router address to each DSM card as shown in this step.

36. Enter local domain and IP router address for the VSCCP card using the **`chg-ip-card`** command. For this example, enter this command:

```
chg-ip-card:loc=1107:domain=nc.tekelec.com
:defrouter=192.168.122.250
```

where

`loc` – The location of the VSCCP card within the EAGLE 5 ISS.

`domain` – The domain name of domain server.

`defrouter` – Default router address. The IP address for default router. This is a TCP/IP address expressed in standard "dot notation". IP addresses consist of the system's network number and the machine's unique host number.

After successful completion of this command, the system returns the following message:

```
RLGHNCXA03W 01-03-30 21:20:37 GMT EAGLE 36.0.0
CHG-IP-CARD: MASP A - COMPLTD
```

37. Verify the new TCP/IP parameters associated with the VSCCP card in the database by entering the **`rtrv-ip-card`** command. This is an example of the possible output:

```
RLGHNCXA03W 01-03-30 21:21:37 GMT EAGLE 36.0.0
   LOC 1107
     SRCHORDR  LOCAL
     DNSA      -----------
     DNSB      -----------
     DEFROUTER 192.168.122.250
     DOMAIN    NC.TEKELEC.COM
```

38. Display the current link parameters associated with the VSCCP card in the database by entering the **`rtrv-ip-lnk`** command. This is an example of the possible output:

```
RLGHNCXA03W 01-03-30 21:14:37 GMT EAGLE 36.0.0
LOC   PORT IPADDR          SUBMASK          DUPLEX SPEED MACTYPE AUTO MCAST
1107  A    -----------     -----------      HALF   10    DIX     NO   NO
1107  B    -----------     -----------      HALF   10    DIX     NO   NO
```

39. Enter the IP address port and speed associated with the VSCCP card in the database using the **chg-ip-lnk** command. For this example, enter these commands:

```
chg-ip-lnk:loc=1107:port=a:duplex=half:ipaddrr=192.168.122.1
  :mactype=dix:speed=100:mcast=yes:submask=255.255.255.0
```

```
chg-ip-lnk:loc=1107:port=b:duplex=half:ipaddrr=192.168.123.1
  :mactype=dix:speed=10:mcast=yes:submask=255.255.255.0
```

where:

loc – The card location of the VSCCP card within the EAGLE 5 ISS.

port – The port ID. The port parameter of the chg-ip-lnk command specifies the physical interface of the DSM card.

ipaddr – IP address assigned to the port. This is a TCP/IP address expressed in standard "dot notation." IP addresses consist of the system's network number and the machine's unique host number.

duplex – This is the mode of operation of the interface.

speed – This is interface bandwidth in megabits per second. The speed is either 100 Mbps for main DSM network or 10 Mbps for backup DSM network.

mactype – This is the Media Access Control Type of the interface. Specify dix for the Digital/Inter/Xerox de facto standard for the Ethernet.

mcast – This is the Multicast Control of the interface.

submask – The subnet mask of the IP interface, in the form of an IP address with a restricted range of values.

When this command has successfully completed, the following message appears:

```
RLGHNCXA03W 01-03-30 21:18:37 GMT EAGLE 36.0.0
CHG-IP-LNK: MASP A - COMPLTD
```

40. Verify the IP address port and speed associated with the VSCCP card in the database by entering the **rtrv-ip-lnk** command. This is an example of the possible output:

```
RLGHNCXA03W 01-03-30 21:14:37 GMT EAGLE 36.0.0
LOC   PORT IPADDR           SUBMASK          DUPLEX SPEED MACTYPE AUTO MCAST
1107  A    192.168.122.1    255.255.255.0    HALF   100   DIX     NO   YES
1107  B    192.168.123.1    255.255.255.0    HALF   10    DIX     NO   YES
```

41. Boot the DSM card that was added in step 31 in TSM emulation mode by using the **alw-card** command. For example, enter this command:

```
RLGHNCXA03W 01-03-30 21:14:37 GMT EAGLE 36.0.0
LOC   PORT IPADDR           SUBMASK          DUPLEX SPEED MACTYPE AUTO MCAST
1107  A    192.168.122.1    255.255.255.0    HALF   100   DIX     NO   YES
1107  B    192.168.123.1    255.255.255.0    HALF   10    DIX     NO   YES
```

42. Verify the in-service normal (IS-NR) status of the VSCCP card using the **rept-stat-card** command. This is an example of the possible output.

```
RLGHNCXA03W 01-03-27 16:43:42 GMT  EAGLE 36.0.0
CARD  VERSION            TYPE    APPL      PST           SST       AST
1101  100-000-00003-000  TSM     SCCP      IS-NR         Active    ---
1102  100-000-00003-000  TSM     SCCP      IS-NR         Active    ---
1103  100-000-00002-000  ACMENET STPLAN    IS-NR         Active    ---
1104  100-000-00003-000  TSM     GLS       IS-NR         Active    ---
1105  100-000-00003-000  LIMOCU  CCS7ITU   IS-NR         Active    ---
1106  100-000-00003-000  LIMOCU  CCS7ITU   IS-NR         Active    ---
1107  100-000-00003-000  DSM     VSCCP     IS-NR         Active    ---
1113  100-000-00002-000  MCAP    OAM       IS-NR         Active    ---
1114  100-000-00002-000  TDM               IS-NR         Active    ---
1115  100-000-00002-000  MCAP    OAM       IS-NR         Active    ---
1116  100-000-00002-000  TDM               IS-NR         Active    ---
1117  100-000-00002-000  MDAL              IS-NR         Active    ---
1201  100-000-00003-000  LIMDS0  SS7ANSI   IS-NR         Active    ---
1202  100-000-00002-000  LIMV35  SS7GX25   IS-NR         Active    ---
1203  100-000-00003-000  LIMV35  SS7ANSI   IS-NR         Active    ---
1204  100-000-00003-000  LIMATM  ATMANSI   IS-NR         Active    ---
1205  100-000-00001-000  DCM     IPLIM     IS-NR         Active    ---
1207  100-000-00001-000  DCM     SS7IPGW   IS-NR         Active    ---
1303  100-000-00001-000  DCM     IPLIM     IS-NR         Active    ---
1305  100-000-00001-000  DCM     SS7IPGW   IS-NR         Active    --
```

43. Test the presence of the EPAP hosts on the network using the **pass** command with the **ping** parameter. This command is invoked with a destination (either a hostname or IP address). For example, enter the following command:

pass:loc=1107:cmd="ping 192.168.122.100".

pass:loc=1107:cmd="ping 192.168.122.200".

pass:loc=1107:cmd="ping 192.168.123.100".

pass:loc=1107:cmd="ping 192.168.123.200".

After successful completion of each command, the system returns output similar to the following:

```
rlghncxa03w 00-06-27 08:30:44 GMT EAGLE 36.0.0
pass: loc=1107: cmd="ping 192.168.122.100"
Command entered at terminal #1.
;
rlghncxa03w 00-06-27 08:30:44 GMT EAGLE 36.0.0
PASS: Command sent to card
;
rlghncxa03w 00-06-27 08:30:44 GMT EAGLE 36.0.0
PING command in progress
;
rlghncxa03w 00-06-27 08:30:46 GMT EAGLE 36.0.0
PING 192.168.122.100: 56 data bytes
64 bytes from tekral.nc.tekelec.com (192.168.122.100):icmp_seq=0.time=5. ms
64 bytes from tekral.nc.tekelec.com (192.168.122.100):icmp_seq=1.time=0. ms
64 bytes from tekral.nc.tekelec.com (192.168.122.100):icmp_seq=2.time=0. ms
----192.168.100.3 PING Statistics----
3 packets transmitted, 3 packets received, 0% packet loss
round-trip (ms) min/avg/max = 0/1/5
PING command complete
```

If the **pass** commands with the **ping** parameter is not successful, verify the the correct connection of the hardware cabling and try again. If the command fails again, contact Technical Services (see "Customer Assistance" on page 1-9).

44. Repeat steps 30 through 43 to add all DSM cards (N+1) to be installed in available slots. Go to the next step to start replacing TSM cards with DSM cards.

45. Replace TSM card(s) with DSM cards if applicable and add DSM card(s) to the database using steps 46 through 68. In this procedure, we are removing two existing adjacent TSM cards and replace them with a double-slot DSM card in slots 1101 and 1102.

NOTE: When adding DSM cards in an in-service environment, you must take care not to interrupt traffic. Before replacing SCCP cards with DSMs, first install a VSCCP card in an available double-slot.

46. Display the TSM cards running the SCCP application in the database using the **`rtrv-card`** command. This is an example of the possible output:

```
RLGHNCXA03W 01-03-15 16:34:56 GMT EAGLE 36.0.0
CARD   TYPE          APPL      PORT A LSET (SLC)   PORT B LSET (SLC)
1101   TSM           SCCP      --------    (--)    --------    (--)
1102   TSM           SCCP      --------    (--)    --------    (--)
1103   ACMENET       STPLAN    --------    (--)    --------    (--)
1104   ACMENET       GLS       --------    (--)    --------    (--)
1105   LIMOCU        CCS7ITU   ls300001    (00)    --------    (--)
1106   LIMOCU        CCS7ITU   ls400001    (00)    --------    (--)
1107   DSM           VSCCP     ls300001    (00)    --------    (--)
1113   MCAP          OAM
1114   TDM
1115   MCAP          OAM
1116   TDM
1117   MDAL
1201   LIMDS0        SS7ANSI   lsn1        (00)    lsn2        (01)
1202   LIMV35        SS7GX25   lsngwy      (00)    --------    (--)
1203   LIMV35        SS7ANSI   lsn2        (00)    lsn1        (01)
1204   LIMATM        ATMANSI   atmgwy      (00)    --------    (--)
1205   DCM           IPLIM     ipgwy1      (00)    ipgwy3      (01)
1207   DCM           SS7IPGW   ipgwy2      (00)    --------    (--)
1303   DCM           IPLIM     ipgwy1      (00)    ipgwy3      (01)
1305   DCM           SS7IPGW   ipgwy4      (00)    --------    (--)
```

Determine the cards to be removed from the database. In this procedure, we will remove the SCCP cards in card locations **1101 and 1102**.

47. Display the SCCP cards that are in service with the **`rept-stat-card:stat=nr`** command. For this example, enter the following command:

`rept-stat-card:stat=nr`

This is an example of the possible output:

```
RLGHNCXA03W 01-03-27 16:43:42 GMT  EAGLE 36.0.0
CARD  VERSION            TYPE    APPL      PST          SST       AST
1101  100-000-00003-000  TSM     SCCP      IS-NR        Active    ---
1102  100-000-00003-000  TSM     SCCP      IS-NR        Active    ---
1103  100-000-00003-000  ACMENET STPLAN    IS-NR        Active    ---
1104  100-000-00003-000  ACMENET GLS       IS-NR        Active    ---
1105  100-000-00003-000  LIMOCU  CCS7ITU   IS-NR        Active    ---
1106  100-000-00003-000  LIMOCU  CCS7ITU   IS-NR        Active    ---
1107  100-000-00003-000  DSM     VSCCP     IS-NR        Active    ---
1113  100-000-00002-000  MCAP    OAM       IS-NR        Active    ---
1114  100-000-00002-000  TDM               IS-NR        Active    ---
1115  100-000-00002-000  MCAP    OAM       IS-NR        Active    ---
1116  100-000-00002-000  TDM               IS-NR        Active    ---
1117  100-000-00002-000  MDAL              IS-NR        Active    ---
1201  100-000-00003-000  LIMDS0  SS7ANSI   IS-NR        Active    ---
1202  100-000-00002-000  LIMV35  SS7GX25   IS-NR        Active    ---
1203  100-000-00003-000  LIMV35  SS7ANSI   IS-NR        Active    ---
1204  100-000-00003-000  LIMATM  ATMANSI   IS-NR        Active    ---
1205  100-000-00001-000  DCM     IPLIM     IS-NR        Active    ---
1207  100-000-00001-000  DCM     SS7IPGW   IS-NR        Active    ---
```

```
1303  100-000-00001-000  DCM     IPLIM     IS-NR         Active    ---
1305  100-000-00001-000  DCM     SS7IPGW   IS-NR         Active    ---
```

48. Inhibit the SCCP cards using the **inh-card** command and specifying the card locations.

inh-card:loc=1101

inh-card:loc=1102

When each command has successfully completed, this message appears:

```
RLGHNCXA03W 01-03-12 09:12:36 GMT  EAGLE 36.0.0
Card has been inhibited.
```

49. Verify that the SCCP cards are in the Out-of-Service Maintenance-Disabled (OOS-MT-DSBLD) state with the **rept-stat-card** command. This is an example of the possible output:

```
RLGHNCXA03W 01-03-27 16:43:42 GMT  EAGLE 36.0.0
CARD  VERSION            TYPE    APPL      PST            SST       AST
1101  100-000-00003-000  TSM     SCCP      OOS-MT-DSBLD   Isolated  ---
1102  100-000-00003-000  TSM     SCCP      OOS-MT-DSBLD   Isolated  ---
1103  100-000-00002-000  ACMENET STPLAN    IS-NR          Active    ---
1104  100-000-00002-000  ACMENET STPLAN    IS-NR          Active    ---
1105  100-000-00003-000  LIMOCU  CCS7ITU   IS-NR          Active    ---
1106  100-000-00003-000  LIMOCU  CCS7ITU   IS-NR          Active    ---
1107  100-000-00003-000  DSM     VSCCP     IS-NR          Active    ---
1113  100-000-00002-000  MCAP    OAM       IS-NR          Active    ---
1114  100-000-00002-000  TDM               IS-NR          Active    ---
1115  100-000-00002-000  MCAP    OAM       IS-NR          Active    ---
1116  100-000-00002-000  TDM               IS-NR          Active    ---
1117  100-000-00002-000  MDAL              IS-NR          Active    ---
1201  100-000-00003-000  LIMDS0  SS7ANSI   IS-NR          Active    ---
1202  100-000-00002-000  LIMV35  SS7GX25   IS-NR          Active    ---
1203  100-000-00003-000  LIMV35  SS7ANSI   IS-NR          Active    ---
1204  100-000-00003-000  LIMATM  ATMANSI   IS-NR          Active    ---
1205  100-000-00001-000  DCM     IPLIM     IS-NR          Active    ---
1207  100-000-00001-000  DCM     SS7IPGW   IS-NR          Active    ---
1303  100-000-00001-000  DCM     IPLIM     IS-NR          Active    ---
1305  100-000-00001-000  DCM     SS7IPGW   IS-NR          Active    ---
```

50. Remove the SCCP cards from the database using the **dlt-card** command. The **dlt-card** command has only one parameter, **loc**, which is the location of the card. For this example, enter these commands:

dlt-card:loc=1101

dlt-card:loc=1102

After successful completion of this command, the system returns the following message:

```
RLGHNCXA03W 01-03-12 09:12:36 GMT  EAGLE 36.0.0
DLT-CARD: MASP A - COMPLTD
```

51. Verify that the SCCP cards are removed from the database using the **rtrv-card** command and specifying the cards that were removed in step 50. For this example, enter these commands:

rtrv-card:loc=1101

rtrv-card:loc=1102

After successful completion of this command, the system returns the following message:

```
E2144 Cmd Rej: Location invalid for hardware configuration
```

52. Locate the TSM card to be removed from the shelf.

Because the TSM card takes just one slot and the DSM card requires two slots, the DSM card must be installed in an odd slot that is adjacent to an even slot on its right side. In this procedure, we will remove two TSM cards from slots 1101 and 1102 to make space for one DSM card.

a. Push the inject/eject clamps outward from the card's faceplate (top clamp in the "UP" position, bottom clamp in the "DOWN" position).Pull the levers away from the shelf until they are parallel to the floor. Gently pull the card towards you until the card clears the shelf.

Figure 4-2. Push Inject/Eject Clamps Outward

b. Place the card you have removed in an electrostatic discharge (ESD) protective container, or place the card in the spare card storage shelf.

53. Repeat step 52 to remove the second TSM card.

54. Install the DSM card in slots 1101 and 1102.

a. Open the ejector levers on the DSM card. Carefully align the card's edges with the top and bottom card guides. Then push the card along the length of the card guides until the rear connectors on the card engage the mating connectors on the target shelf backplane.

b. Press the left edge of the card's faceplate using constant pressure until you feel the card's progress cease.

Do not impact the faceplate in order to mate the connectors. Any impact to the card's faceplate can damage the faceplate, the pins, or the connectors.

c. Push in the top and bottom inject/eject clamps. This locks the card in place and ensures a strong connection with the pins on the target shelf backplane.

Figure 4-3. Push in Inject/Eject Clamps

d. Verify that both IMT bus LEDs are green.

e. Install the cabling required to connect the DSM card to the MPS. Refer to the Installation Manual for details.

---

55. Add the DSM card to the database and assign the VSCCP application using the `ent-card` command. For this example, enter this command:

```
ent-card:loc=1101:type=dsm:appl=vsccp
```

where:

`loc` - specifies the slot number for the card. The slot number must be an odd number.

`type` - specifies that the card is a DSM card.

`appl` - specifies that the application is VSCCP.

After successful completion of this command, the system returns the following message:

```
RLGHNCXA03W 01-03-12 09:12:36 GMT  EAGLE 36.0.0
ENT-CARD: MASP A - COMPLTD
```

56. Display the new VSCCP card using the **rtrv-card** command with the card location specified. For this example, enter this command:

rtrv-card:loc=1101

This is an example of the possible output:

```
RLGHNCXA03W 01-03-30 09:12:36 GMT EAGLE 36.0.0
CARD   TYPE          APPL      PORT A LSET (SLC)   PORT B LSET (SLC)
1101 DSM           VSCCP     --------    (--)    --------    (--)
```

57. Display the current IP host information in the database by entering the **rtrv-ip-host** command. The following is an example of the possible output.

```
RLGHNCXA03W 01-03-30 21:17:37 GMT EAGLE 36.0.0

IPADDR          HOST
192.1.1.32      KC_HLR2
192.1.1.50      DN_MSC1
192.1.1.52      DN_MSC2
192.168.122.1   VSCCP_1107_A
192.168.123.1   VSCCP_1107_B
```

58. Add the host name and IP address for each VSCCP link using the **ent-ip-host** command. For example, enter these commands:

ent-ip-host:host=vsccp_1101_a:ipaddr=192.168.122.2

ent-ip-host:host=vsccp_1101_b:ipaddr=192.168.123.2

where:

host - specifies the host name. Each VSCCP link must be specified separately.

ipaddr - specifies the IP network address for each EPAP. The first three octets of the IP address must be the same as MPS A and B ports, respectively. The fourth octet identifies the DSM card and must have a a unique octet identifier for the card's IP address; we recommend numbering the DSM cards sequentially, using values 1 to 25. (This example shows the assignment of the second DSM card.)

After successful completion of this command, the system returns the following message:

```
RLGHNCXA03W 01-03-30 21:18:37 GMT EAGLE 36.0.0
ENT-IP-HOST: MASP A - COMPLTD
```

59. Verify the new IP host information in the database by entering the **rtrv-ip-host** command. This is an example of the possible output:

```
RLGHNCXA03W 01-03-30 21:19:37 GMT EAGLE 36.0.0

IPADDR          HOST
192.1.1.32      KC_HLR2
192.1.1.50      DN_MSC1
192.1.1.52      DN_MSC2
192.168.122.1   VSCCP_1107_A
192.168.123.1   VSCCP_1107_B
192.168.122.2   VSCCP_1101_A
192.168.123.2   VSCCP_1101_B
```

NOTE: Most A-Port customer private networks do not require setting up a default router for the DSM card. However, if your network configuration does require a default router to connect the DSM card communication to the EPAP, then only one default router is assignable to each DSM card. Assign the default router address to each DSM card as shown in this step.

60. Enter local domain and IP router address for the VSCCP card using the **chg-ip-card** command. For this example, enter this command:

```
chg-ip-card:loc=1107:domain=nc.tekelec.com
:defrouter=192.168.122.250
```

where:

loc – The card location of the card within the EAGLE 5 ISS.

domain – The domain name of domain server.

defrouter – Default router address. The IP address for default router. This is a TCP/IP address expressed in standard “dot notation”. IP addresses consist of the system’s network number and the machine’s unique host number.

After successful completion of this command, the system returns the following message:

```
RLGHNCXA03W 01-03-30 21:20:37 GMT EAGLE 36.0.0
CHG-IP-CARD: MASP A - COMPLTD
```

61. Verify the local domain and IP router address associated with the VSCCP card in the database by entering the **rtrv-ip-card** command. This is an example of the possible output:

```
RLGHNCXA03W 01-03-30 21:21:37 GMT EAGLE 36.0.0
   LOC 1101
     SRCHORDR  LOCAL
     DNSA      -----------
     DNSB      -----------
     DEFROUTER 192.168.122.250
     DOMAIN    NC.TEKELEC.COM
```

62. Display the current link parameters associated with the VSCCP card in the database by entering the **rtrv-ip-lnk** command. This is an example of the possible output:

```
RLGHNCXA03W 01-03-30 21:14:37 GMT EAGLE 36.0.0
LOC   PORT IPADDR          SUBMASK          DUPLEX SPEED MACTYPE AUTO MCAST
1101  A    -----------     -----------      HALF   10    DIX     NO   NO
1101  B    -----------     -----------      HALF   10    DIX     NO   NO
1107  A    -----------     -----------      HALF   10    DIX     NO   NO
1107  B    -----------     -----------      HALF   10    DIX     NO   NO
```

63. Change the link parameters associated with the VSCCP card in the database using the **chg-ip-lnk** command. For this example, enter these commands:

```
chg-ip-lnk:loc=1101:port=a:duplex=half:ipaddrr=192.168.122.2
  :mactype=dix:speed=100:mcast=yes:submask=255.255.255.0
```

```
chg-ip-lnk:loc=1101:port=b:duplex=half:ipaddrr=192.168.123.2
  :mactype=dix:speed=10:mcast=yes:submask=255.255.255.0
```

where:

loc – The card location of the card within the EAGLE 5 ISS.

port – The port ID. The port parameter of the chg-ip-lnk command specifies the physical interface of the DSM card.

ipaddr – IP address assigned to the port. This is a TCP/IP address expressed in standard "dot notation." IP addresses consist of the system's network number and the machine's unique host number.

duplex – This is the mode of operation of the interface.

speed – This is interface bandwidth in megabits per second. The speed is either 100 Mbps for main DSM network or 10 Mbps for backup DSM network.

mactype – This is the Media Access Control Type of the interface. Specify dix for the Digital/Inter/Xerox de facto standard for the Ethernet.

mcast – This is the Multicast Control of the interface.

submask – The subnet mask of the IP interface, in the form of an IP address with a restricted range of values.

When this command has successfully completed, the following message should appear.

```
RLGHNCXA03W 01-03-30 21:18:37 GMT EAGLE 36.0.0
CHG-IP-LNK: MASP A - COMPLTD
```

64. Verify the new link parameters associated with the VSCCP card in the database by entering the **rtrv-ip-lnk** command. The following is an example of the possible output.

```
RLGHNCXA03W 01-03-30 21:14:37 GMT EAGLE 36.0.0
LOC   PORT IPADDR          SUBMASK          DUPLEX SPEED MACTYPE AUTO MCAST
1101  A    192.168.122.2   255.255.255.0    HALF   100   DIX     NO   YES
1101  B    192.168.123.2   255.255.255.0    HALF   10    DIX     NO   YES
1107  A    192.168.122.1   255.255.255.0    HALF   100   DIX     NO   YES
1107  B    192.168.123.1   255.255.255.0    HALF   10    DIX     NO   YES
```

65. Boot the DSM card that was inhibited in step 48 in TSM emulation mode by using the **alw-card** command. For example, enter this command:

alw-card:loc=1101

This message appears:

```
RLGHNCXA03W  01-03-30 21:20:37 GMT EAGLE 36.0.0
Card has been allowed
```

66. Verify the in-service normal (IS-NR) status of the VSCCP card using the **rept-stat-card** command. This is an example of the possible output:

```
RLGHNCXA03W 01-03-27 16:43:42 GMT  EAGLE 36.0.0
CARD  VERSION            TYPE    APPL      PST           SST       AST
1101  100-000-00003-000  DSM     VSCCP     IS-NR         Active    ---
1103  100-000-00002-000  ACMENET STPLAN    IS-NR         Active    ---
1104  100-000-00003-000  TSM     GLS       IS-NR         Active    ---
1105  100-000-00003-000  LIMOCU  CCS7ITU   IS-NR         Active    ---
1106  100-000-00003-000  LIMOCU  CCS7ITU   IS-NR         Active    ---
1107  100-000-00003-000  DSM     VSCCP     IS-NR         Active    ---
1113  100-000-00002-000  MCAP    OAM       IS-NR         Active    ---
1114  100-000-00002-000  TDM               IS-NR         Active    ---
1115  100-000-00002-000  MCAP    OAM       IS-NR         Active    ---
1116  100-000-00002-000  TDM               IS-NR         Active    ---
1117  100-000-00002-000  MDAL              IS-NR         Active    ---
1201  100-000-00003-000  LIMDS0  SS7ANSI   IS-NR         Active    ---
1202  100-000-00002-000  LIMV35  SS7GX25   IS-NR         Active    ---
1203  100-000-00003-000  LIMV35  SS7ANSI   IS-NR         Active    ---
1204  100-000-00003-000  LIMATM  ATMANSI   IS-NR         Active    ---
1205  100-000-00001-000  DCM     IPLIM     IS-NR         Active    ---
1207  100-000-00001-000  DCM     SS7IPGW   IS-NR         Active    ---
1303  100-000-00001-000  DCM     IPLIM     IS-NR         Active    ---
1305  100-000-00001-000  DCM     SS7IPGW   IS-NR         Active    ---
```

67. Test the presence of the EPAP hosts on the network using the **pass** command with the **ping** parameter. This command is invoked with a destination (either a hostname or IP address). For example, enter the following command:

pass:loc=1101:cmd="ping 192.168.122.100".

pass:loc=1101:cmd="ping 192.168.122.200".

pass:loc=1101:cmd="ping 192.168.123.100".

pass:loc=1101:cmd="ping 192.168.123.200".

After successful completion of each command, the system returns output similar to the following:

```
rlghncxa03w 00-06-27 08:30:44 GMT EAGLE 36.0.0
pass: loc=1101: cmd="ping 192.168.122.100"
Command entered at terminal #1.
;
rlghncxa03w 00-06-27 08:30:44 GMT EAGLE 36.0.0
PASS: Command sent to card
;
rlghncxa03w 00-06-27 08:30:44 GMT EAGLE 36.0.0
PING command in progress
;
rlghncxa03w 00-06-27 08:30:46 GMT EAGLE 36.0.0
PING 192.168.122.100: 56 data bytes
64 bytes from tekral.nc.tekelec.com (192.168.122.100):icmp_seq=0.time=5. ms
64 bytes from tekral.nc.tekelec.com (192.168.122.100):icmp_seq=1.time=0. ms
64 bytes from tekral.nc.tekelec.com (192.168.122.100):icmp_seq=2.time=0. ms
----192.168.100.3 PING Statistics----
3 packets transmitted, 3 packets received, 0% packet loss
round-trip (ms) min/avg/max = 0/1/5
PING command complete
```

If the **pass** command with the **ping** parameter is not successful, verify the the correct connection of the hardware cabling and try again. If the command fails again, contact Technical Services (see "Customer Assistance" on page 1-9).

68. Repeat steps 46 through 67 to replace all adjacent TSM cards identified in the prerequisites and to be replaced with DSM cards.

69. Repeat steps 48 through 52 to inhibit any remaining TSM cards running the SCCP application and remove them from database and shelf.

NOTE: The A-Port feature cannot be turned on until TSM cards running the SCCP application are removed from the system.

CAUTION: At this point in the procedure, contact Tekelec Technical Services for assistance in completing this A-Port activation procedure (see "Customer Assistance" on page 1-9).
Do not proceed without consulting with Technical Services

70. Turn on and configure the A-Port feature using steps 71 through 87.

71. Enter the **enable-ctrl-feat** command to enable the A-Port feature.

```
enable-ctrl-feat:partnum=893016601:fak=<Feature Access Key>
```

72. Enter the **chg-ctrl-feat** command to activate the A-Port feature.

```
chg-ctrl-feat:partnum=893016601:status=ON
```

73. Enter the **enable-ctrl-feat** command to enable the MTP MSGS for SCCP Apps feature.

```
enable-ctrl-feat:partnum=893017401:fak=<Feature Access Key>
```

74. Enter the **chg-ctrl-feat** command to activate the MTP MSGS for SCCP Apps feature.

```
chg-ctrl-feat:partnum=893017401:status=ON
```

75. Enter the default country code (CC) and default network destination code (NDC) to convert the nature of address indicator (NAI) of MDNs to the international format (**nai=intl**) with the **chg-stpopts** command. The parameters in this command are used for number conditioning. For example, enter this command:

```
chg-stpopts:defcc=49:defndc=177:dsmaud=on:npcfmti=14-9-2-1
```

where:

defcc – The default country code.

defndc – The default network destination code.

dsmaud – The DSM audit running state (on or off).

npcfmt1 – The ITU National Point Code Format Identifier, which identifies how the ITU-N point code is entered into the database and how it is displayed in all EAGLE 5 ISS outputs. This code is a 14-bit integer.

After successful completion of this command, the system returns the following output:

```
rlghncxa03w 01-03-07 00:57:31 GMT EAGLE 36.0.0
CHG-STPOPTS: MASP A - COMPLTD
```

76. Verify the new country code and network destination code using the **rtrv-stpopts** command. This is an example of the possible output:

```
rlghncxa03w 04-04-17 16:02:05 EST  EAGLE 36.0.0
    STP OPTIONS
    --------------------------
    MTPT31CTL                 1
    MTPLTI                  yes
    MTPLTCTDPCQ               3
    MTPLTST               10000
    MTPXLQ                  500
    MTPXLET                0100
    MTPXLOT                 90%
    MTPDPCQ                8000
    TFATFRPR               1000
    MTPRSI                  yes
    MTPRSIT                5000
    MTPLPRST                yes
    MTPT10ALT             30000
    UIMRD                   yes
    SLSCNV                perls
    CRITALMINH              yes
    DISPACTALMS              no
    NPCFMTI            14-9-2-1
    GSMDFLT                PASS
    GSMDECERR              PASS
    DEFCC                    49
    DEFNDC                  177
    DSMAUD                   on
    RPTLNPMRSS              yes
    RANDSLS                 all
    GR2878RGLBL              no
    RSTRDEV                  on
    SECMTPMATE              off
    SECMTPSID               off
    SECMTPSNM            notify
    SECSCCPSCMG          notify
    CNVCGDA                 yes
    CNVCGDI                 yes
    CNVCGDN                 yes
    CNVCGDN24               yes
    GTCNVDFLT               yes
    ANSIGFLEX               yes
    HSCLKSRC              RS422
    HSCLKLL            LONGHAUL
```

77. Change the IS41 system options in the database. For example, enter this command:

chg-is41opts:rspcgpanai=7:rspcgpanp=15:rspdig=ccrndn

where:

rspcgpanai - specifies a new NAI value to override the NAI value specified in the SCCP CdPA of a received LOCREQ/SMSREQ if the message is to be relayed after database lookup

rspcgpanp - defines the numbering plan value of the MNP_SRF.

rspdig - specifies the digit encoding format of the LOCREQ TCAP Outgoing Called Party parameter on a per EAGLE 5 ISS node basis

The system returns the following message:

```
rlghncxa03w 00-08-20 09:04:14 GMT EAGLE 36.0.0
CHG-IS41OPTS: MASP A - COMPLTD
```

78. Verify the changes using the **rtrv-is41opts** command. This command displays all is41 options from the database. This is an example of the possible output:

```
tekelecstp 06-08-15 10:33:44 EST  EAGLE 36.0.0

    IS41 OPTIONS
    -----------------------
    SMSREQBYPASS    = NO
    LOCREQDN        = TCAP
    IEC             = 0
    NEC             = 00
    RSPCGPARI       = FRMSG
    RSPCGPAPCP      = FRMSG
    RSPCDPARI       = FRMSG
    RSPCDPAPCP      = FRMSG
    RSPCGPANAI      = 7
    RSPCGPANP       = 15
    RSPCGPATT       = 0
    MTPLOCREQNAI    = SUB
    RSPPARM         = DDIGIT
    RSPDIG          = CCRNDN
    RSPNON          = 0
    RSPNP           = 0
    RSPMIN          = NOTHOMERN
    MSCMKTID        = 32300
    MSCSWITCH       = 20
    ESNMFG          = 0
    ESNSN           = 0
    RSPDIGTYPE      = 0
    LOCREQRMHRN     = NO
    TCAPSNAI        = SUB
```

79. Add routing number prefixes for the operating network using the **ent-homern** command. Use this command to enter any Home RNs that are prefixed to DNs for incoming A-Port messages. Use this command to enter up to 100 routing number prefixes for the operating network into the HOMERN table. For example, enter this command:

ent-homern:rn=34

where:

rn – The home routing number prefix. The range is 1 to 15 hex digits (0-F).

When this command has successfully completed, this message appears.

```
RLGHNCXA03W  01-03-07 00:28:31 GMT EAGLE 36.0.0
```

```
HOMERN table is (1 of 100) 1% full
ENT-HOMERN:  MASP A - COMPLTD
```

80. Verify the changes using the **rtrv-homern** command. This command retrieves a list of routing number prefixes that belong to the operating network. Here is an example of the possible output.

```
rlghncxa03w  01-03-28  00:29:31 GMT EAGLE 36.0.0.0
RN
----------------
216780909087654
76345098
c10234567
c222
cabade
abc
abc123

HOMERN table is (6 of 100) 6% full
```

81. Verify the changes using the **rtrv-srvsel** command. This command retrieves a list of administered service selector combinations. This is an example of the possible output:

```
rlghncxa03w 00-06-20 09:09:14 GMT EAGLE 36.0.0
GTII  TT   NP       NAI   NPV  NAIV  SSN  SNP   SNAI   SERV
4     1    e214     intl  ---  ---   3    ---    --- gport
```

82. Use the **ent-srvsel** command to enter the A-Port service selectors by network type. This command assigns applicable service selectors required to specify the service entry for DSM services. For example, enter the following command:

ent-srvsel:gtia=2:tt=1:snp=e164:snai=intl:serv=mnp:nai=intl :np=e164:ssn=9

where:

gtia - specifies the global title translation indicator (2 = ANSI, ITU; 4 = ITU).

tt - specifies the translation type.

snp - defines the service numbering plan (e164, e212, or e214).

snai - specifies the international Service Nature of Address Indicator.

serv - specifies the service feature.

nai - specifies the nature of address indicator.

np - specifies the numbering plan.

ssn - defines the subsystem number

The system returns the following message:

```
rlghncxa03w  01-03-07 00:28:31 GMT EAGLE 36.0.0
Service Selector table is (114 of 1024) 11% full
ENT-SRVSEL:  MASP A - COMPLTD
```

83. Verify the changes using the **`rtrv-srvsel`** command. This command retrieves a list of administered service selector combinations. Avoid lengthy output by filtering the list using various parameter combinations. (The selector table can have over 1,000 entries.) For example, enter this command:

```
rtrv-srvsel:gtai=2
```

After successful completion of this command, the system returns output similar to the following:

```
GTAI  TT   NP        NAI    NPV  NAIV  SNP  SNAI  SERV
2     0    e164      intl   ---  ---   e164 intl  mnp
2     1    e164      intl   ---  ---   e164 intl  mnp
```

CAUTION: When you have an in-service environment and you are replacing TSM cards with DSM cards, initialize one DSM card at a time. Verify its return to IS-NR state before initializing another DSM card. This precaution keeps cards in service and precludes an interruption of SCCP services.

GTT, EGTT, and VGTT traffic are routed based on the global titles in the OAM database while G-Flex, A-Port, and INP traffic is routed based on the global title in the RTDB. Rebooting a DSM card running the VSCCP application causes both the OAM and RTDB databases on the DSM card to reload

84. Reload a DSM card using the **`init-card`** command. For example, enter this command:

```
init-card:loc=1101
```

The system returns the following message

```
rlghncxa03w  01-03-07 00:28:31 GMT EAGLE 36.0.0
Command entered at terminal #3.
Init Card command issued to card 1101
```

85. Verify its return to IS-NR state with the **rept-stat-card** command. (Wait until in-service state is restored.) This is an example of the possible output:

```
RLGHNCXA03W 01-03-07 00:30:42 GMT  EAGLE 36.0.0
CARD  VERSION            TYPE    APPL      PST           SST       AST
1101  100-000-00003-000  DSM     VSCCP     IS-NR         Active    ---
1103  100-000-00002-000  ACMENET STPLAN    IS-NR         Active    ---
1104  100-000-00003-000  TSM     GLS       IS-NR         Active    ---
1105  100-000-00003-000  LIMOCU  CCS7ITU   IS-NR         Active    ---
1106  100-000-00003-000  LIMOCU  CCS7ITU   IS-NR         Active    ---
1107  100-000-00003-000  DSM     VSCCP     IS-NR         Active    ---
1113  100-000-00002-000  MCAP    OAM       IS-NR         Active    ---
1114  100-000-00002-000  TDM               IS-NR         Active    ---
1115  100-000-00002-000  MCAP    OAM       IS-NR         Active    ---
1116  100-000-00002-000  TDM               IS-NR         Active    ---
1117  100-000-00002-000  MDAL              IS-NR         Active    ---
1201  100-000-00003-000  LIMDS0  SS7ANSI   IS-NR         Active    ---
1202  100-000-00002-000  LIMV35  SS7GX25   IS-NR         Active    ---
1203  100-000-00003-000  LIMV35  SS7ANSI   IS-NR         Active    ---
1204  100-000-00003-000  LIMATM  ATMANSI   IS-NR         Active    ---
1205  100-000-00001-000  DCM     IPLIM     IS-NR         Active    ---
1207  100-000-00001-000  DCM     SS7IPGW   IS-NR         Active    ---
1303  100-000-00001-000  DCM     IPLIM     IS-NR         Active    ---
1305  100-000-00001-000  DCM     SS7IPGW   IS-NR         Active    ---
```

86. After the **init-card** and the **rept-stat-card** commands show that service is successfully restored, repeat steps 82 and 85 for each DSM card in your system.

87. Enter the **chg-sccp-serv:serv=mnp:state=online** command to set the MNP service state online.

88. Confirm that essential activation procedures are successful.

- Use **rept-stat-sccp** to verify all your DSM cards are loaded and are IS-NR (in-service normal) status.
- Use **rept-stat-mps** to verify all your DSM cards and the EPAP are connected and operational.
- Use **rept-stat-db:display=all** to verify database levels are identical for the EPAP PDB and RTDB and the RTDBs on the DSM cards.

The A-Port feature is now installed, activated, and ready for operations.

5

Maintenance and Measurements

Hardware Requirements

The A-Port feature requires DSM-based boards to run the VSCCP GPL. The EAGLE 5 ISS may be equipped with from 1 to 25 DSM cards to support A-Port.

CAUTION: Having a mix of SCCP and VSCCP card types is not permitted with the A-Port feature enabled, that is, VSCCP cards and SCCP cards cannot coexist in a system operating the A-Port feature.
Refer to the *Dimensioning Guide for EPAP Advanced DB Features Technical Reference* for important information on the dimensioning rules and the DSM database capacity requirements.

The A-Port feature also requires a T1000 AS based MPS system.

EPAP Status and Alarms

EPAP has no direct means of accepting user input or displaying output messages on EAGLE 5 ISS terminals, so maintenance, measurements, and status information are routed through a DSM. EPAP sends two types of messages to the DSM: EPAP maintenance blocks and DSM status requests. Each is discussed in the following sections.

EPAP Maintenance Blocks

The active EPAP generates and sends maintenance blocks to the primary DSM. One maintenance block is sent as soon as the IP link is established between the active EPAP and the primary DSM. Additional maintenance blocks are sent whenever the EPAP needs to report any change in status or error conditions. The information returned in maintenance blocks is included in the output of the **`rept-stat-mps`** and **`rept-stat-sccp`** commands.

The EPAP sends maintenance blocks that contain (at least) the following information.

- Status of EPAP 'A' - actual states are active, standby, and down (inoperative). Maintenance blocks include a field so this information can be forwarded to the EPAP A Device Control Block (DCB), where it is available for the output of the **`rept-stat-mps`** command.
- Status of EPAP 'B' - actual states are active, standby, and down (inoperative). Maintenance blocks include a field so this information can be forwarded to the EPAP B DCB, where it is available for the output of the rept-stat-mps command.
- Identification of active EPAP - a field to identify the active EPAP.
- Congestion indicator - an indicator showing provisioning link congestion. The link between the EPAPs and the external source of provisioning data can become congested in high provisioning traffic situations. When this occurs and subsequently as the congestion clears, the EPAP sends maintenance blocks to the DSM. The EPAP must ensure that no more than one maintenance block per second is sent to the primary DSM if the only reason is to report a change in congestion status.
- Alarm conditions - an error code field. If the EPAP needs to report an alarm condition, it puts an appropriate UAM identifier in this field.
- Current MPS database size - a field indicating the current RTDB size. The DSM uses this information to calculate the percentage of memory utilized by the RTDB.

DSM Status Requests

When the EPAP needs to know the status of a DSM, it can send a DSM Status Request to that DSM. Since status messages are sent over UDP, the EPAP broadcasts the DSM Status Request and all DSMs return their status.

DSM Status Reporting to the EPAP

The sections that follow describe the DSM status reporting for the EPAP.

DSM Status Messages – When Sent

The EPAP needs to know the current status of various aspects of the DSMs. Accordingly, the DSM sends a DSM status message to the EPAP when the following events occur:

- When the DSM is booted.
- When the DSM receives a DSM Status Request message from the EPAP.
- When the DSM determines that it needs to download the entire database, for example, if the DSM determines that the RTDB needs to be downloaded (for instance, if the database is totally corrupted), or if a craftsperson requests that the database be reloaded.
- When the DSM starts receiving DB downloads or DB updates. When the DSM card(s) starts downloading the RTDB, or if the DSM starts accepting database updates, it needs to send a status message informing the EPAP of the first record received. This helps the EPAP keep track of downloads in progress.

DSM Status Message Fields

The DSM status message provides the following information to the EPAP:

- **DSM Memory Size**. When the DSM is initialized, it determines the amount of applique memory present. The EPAP uses this value to determine if the DSM has enough memory to hold the RTDB.
  Refer to the *Dimensioning Guide for EPAP Advanced DB Features Technical Reference* for important information on the dimensioning rules and the DSM database capacity requirements**.**
- **Load Mode Status**. This is a flag indicating whether or not 80% of the IS-NR LIMs have access to SCCP services.

A-Port System Status Reports

Status reporting described here includes the following:

- System status
- A-Port status
- DSM memory capacity status
- Loading mode support status

System Status Reporting

The **`rept-stat-sys`** command supports the DSM cards running the VSCCP application.

The **`rept-stat-sccp`** command supports the DSM cards running the VSCCP application and reports A-Port statistics.

A-Port Status Reporting

The **`rept-stat-mps`** command supports A-Port system reporting. rept-stat-mps concentrates on reporting the status of the A-Port provisioning system. See "Maintenance and Measurements User Interface Commands" on page 3-13, for more details. A-Port statistics are placed in the **`rept-stat-sccp`** command.

DSM Memory Capacity Status Reporting

As mentioned in the ""DSM Status Reporting to the EPAP" on page 5-3, the DSM sends a message to the EPAP containing the amount of memory on the DSM board. The EPAP determines whether the DSM has enough memory to store the RTDB and sends an ack or nak back to the DSM indicating whether or not the DSM has an adequate amount of memory. Refer to the *Dimensioning Guide for EPAP Advanced DB Features Technical Reference* for important information on the dimensioning rules and the DSM database capacity requirements**.**

When the EPAP sends database updates to the DSMs, the update messages include a field that contains the new database memory requirements. Each DSM monitors the DB size requirements, and issues a minor alarm if the size of the DB exceeds 80% of its memory. If a database increases to the point that there is insufficient DSM memory, a major alarm is issued.

The **`rept-stat-mps:loc=xxxx`** command shows the amount of memory used by the RTDB as a percent of available DSM memory.

Loading Mode Support Status Reporting

The OAM application determines whether or not the system is in an unstable loading mode since it knows the state of all LIM, SCCP, and DSM cards in the system. When the loading mode is unstable, the **`rept-stat-sys`** command reports the existence of the unstable loading mode and the specific conditions that caused it. Refer to "Loading Mode Support" on page 5-6, for more details.

Code and Application Data Loading

In general, administrative updates can occur while a DSM card is loading. The DSM card should also remain in an in-transition state if the STP portion of the database has completed loading and is waiting for the RTDB to download.

DSM Code Loading

The EAGLE 5 ISS OAM performs code loading of the DSM card.

EPAP Application Data Loading

The A-Port feature requires that new TDM-resident data tables be loaded in addition to those currently supported by EAGLE 5 ISS. The GPL and data loading support this additional table loading while maintaining support for loading the existing EAGLE 5 ISS tables.

In order to support both RTDB and STP data loading, the VSCCP GPL verifies its hardware configuration during initialization to determine if it has the capacity to support the RTDB.

The VSCCP GPL application data loader registers all tables for loading, independent of the A-Port feature provisioning and main board / applique hardware configuration. As a result, load requests are always identical. During loading, multiple DSM load requests can then be combined into a single download, reducing the overall download time. The DSM card stores or discards RTDB table data based on whether or not it has RTDB-capable hardware for features like G-Port, G-Flex, Migration, INP, and EIR.

The OAM, on the other hand, downloads or sets memory boundaries for the A-Port options, entity, and service selector tables only if the A-Port feature is provisioned. When the A-Port feature is not provisioned, the OAM does not attempt to read these tables from disk. Instead, empty tables (i.e., tables without entries) are downloaded. All other tables requested for loading are read from disk and downloaded routinely.

Non-A-Port Data Initialization

If the DSM card's hardware configuration cannot support the RTDB, the A-Port tables are marked as absent during Service Management System initialization. Memory is not reserved for the A-Port table data. Additionally, the A-Port tables are registered with the application data loader (ADL) specifying a data discard function. A-Port table data is discarded during loading by the ADL discard function, rather than storing it in memory.

A-Port Data Initialization

If the DSM card detects A-Port-capable hardware, the A-Port tables are registered with ADL specifying a data load function. Any A-Port table data downloaded are stored in memory during loading.

EPAP-DSM Loading Interface

The DSM must convey to the EPAP that it needs to download the RTDB. This is done when the DSM sends a Full Download Request message to the EPAP.

Loading Mode Support

80% Threshold of Support

Loading mode is based on the ability of the system to provide SCCP service to at least 80% of the LIMs.

VSCCP Capacity

An insufficient number of VSCCP cards that are is-nr or oos-mt-dsbld relative to 80% of the number of provisioned LIMs is called a “failure to provide adequate SCCP capacity.”

Insufficient SCCP Service

It is also possible for LIMs or VSCCP cards to be inhibited or to have problems that prevent them from operating normally. If enough VSCCP cards are out of service, it may not be possible for the remaining is-nr VSCCP cards to service at least 80% of the number of is-nr LIMs. This is called “insufficient SCCP service.” When this occurs, some of the LIMs are denied SCCP service. It is possible to inhibit LIMs to bring the ratio back to 16:1 (or better).

Conditions That Create an Unstable Loading Mode

Current system implementation interrupts and aborts card loading upon execution of an STP database chg command. Loading mode support denies the execution of STP database chg commands when the system is in an unstable loading mode. An unstable loading mode exists when any of the following conditions are true:

- The system's maintenance baseline has not been established.
- Less than 80% of the number of LIMs provisioned are is-nr or oos-mt-dsbld.
- The number of is-nr and oos-mt-dsbld sccp cards is insufficient to service at least 80% of all provisioned LIMs.
- Insufficient SCCP service occurs when an insufficient number of is-nr VSCCP cards are available to service at least 80% of the number of is-nr LIMs.
- LIM cards are being denied SCCP service and any VSCCP cards are in an abnormal state (oos-mt, is-anr).

Actions Taken When the System is in an Unstable Loading Mode

- No affect on RTDB downloads or updates.

  Unstable loading mode has no impact on RTDB downloads or the stream of RTDB updates.

- **`rept-stat-sys`** reports unstable loading mode.

  When the loading mode is unstable, the **`rept-stat-sys`** command reports the existence of the unstable loading mode and the specific trigger that caused it.

- No STP database updates allowed.

  When in an unstable loading mode, the EAGLE 5 ISS does not accept STP database updates. When updates are rejected, the reason is given as: E3112 Cmd Rej: Loading Mode unstable due to SCCP service is deficient.

  The **`inh-card`** and **`alw-card`** commands can be used to alter SCCP service levels to achieve the 80% threshold. This can be repeated for each card until the system is able to supply SCCP services to at least 80% of the is-nr LIMs. The remaining 20% LIM or supporting VSCCP cards may remain out of service until the stream of STP database updates ceases. This stream of updates can be temporarily interrupted to allow the remaining 20% of the system to come in service.

  Once an STP database has been loaded, that database can be updated (as long as the system is not in an unstable loading mode). However, if an STP update comes in during STP database loading, the DSM aborts the current loading, issues a class 01D7 obit, and reboots. Figure 5-1 shows an example.

Figure 5-1. Obit Message for Abort of Card Loading

```
tekelecstp 97-04-08 12:29:04 EAGLE 36.0.0
----------------------------------------------------------------------
     Card 1317   Module RADB_MGR.C  Line  337  Class 01d7
        Card 1317   Module RADB_MGR.C  Line  337  Class 01d7
        Register Dump :
            EFL=00000246    CS =0058        EIP=0000808d    SS =0060
            EAX=000a6ff3    ECX=000a0005    EDX=00000000    EBX=000a6fa0
            ESP=00108828    EBP=0010882c    ESI=001f1e10    EDI=00000000
            DS =0060        ES =0060        FS =0060        GS =0060

        Stack Dump :
        [SP+1E]=001f    [SP+16]=0000    [SP+0E]=000a    [SP+06]=0010
        [SP+1C]=1e10    [SP+14]=0004    [SP+0C]=6fa0    [SP+04]=8850
        [SP+1A]=0010    [SP+12]=001f    [SP+0A]=0004    [SP+02]=0001
        [SP+18]=886c    [SP+10]=4928    [SP+08]=7ec3    [SP+00]=504b

        User Data Dump :

        14 02 fa ed 01 01 1d 01 5a 01 00                     ........Z..

    Report Date:97-04-08  Time:12:29:04
```

Using the force Option

Use the force option to execute commands that would put the system in unstable loading mode. If executing the **`ent-card`** or **`inh-card`** commands would cause the system to enter an unstable loading mode, use the force option on the command.

State Transitions during Start-Up

Figures 5-2 through 5-8 show the transitions that a DSM card goes through as it boots, loads code and data, and runs various VSCCP services. These figures do not illustrate every possible situation, but they do include the most common scenarios involving the A-Port feature.

In Figure 5-2, the A-Port feature is not enabled, and the DSM card can operate in TSM emulation mode, although it does not provide A-Port operation.

Figure 5-2. A-Port Not Enabled, DSM Running in TSM Emulation

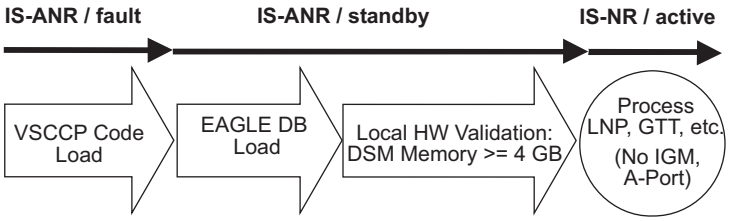

In Figure 5-3, the A-Port feature is enabled, and the DSM card memory is 4 GB and is connected to the EPAP. A normal DSM card operating sequence occurs, providing A-Port service.

Figure 5-3. A-Port Enabled, Normal Operating Sequence

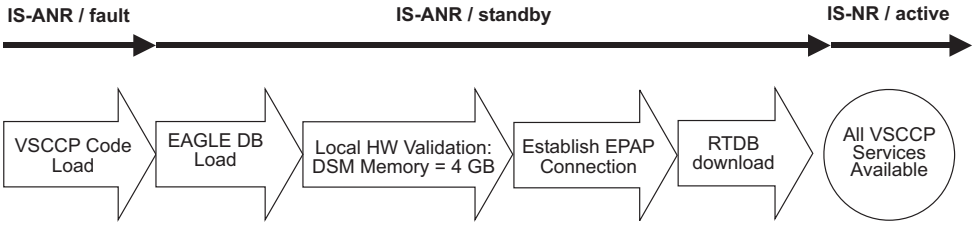

In Figure 5-4, the A-Port feature is enabled, the DSM card memory is 4 GB, but the DSM card is unable to connect EPAP; the A-Port cannot begin operation.

Figure 5-4. A-Port Enabled, but DSM Not Connected to EPAP

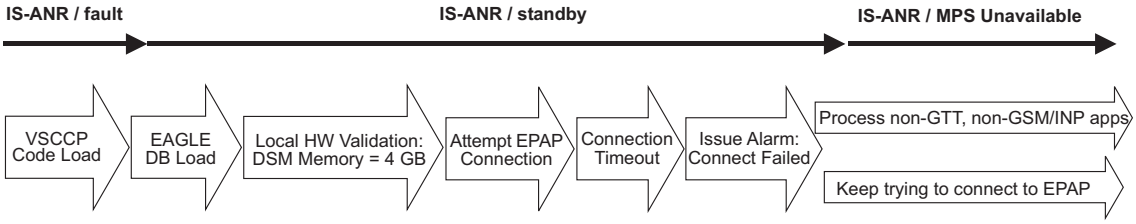

In Figure 5-5, the A-Port feature is enabled, the DSM card has the required 4 GB memory and is connected to the EPAP, but the DSM card is too small for the required database; A-Port cannot begin operation. Refer to the *Dimensioning Guide for EPAP Advanced DB Features Technical Reference* for important information on the dimensioning rules and the DSM database capacity requirements.

Figure 5-5. A-Port Enabled, but DSM Memory Insufficient for Database

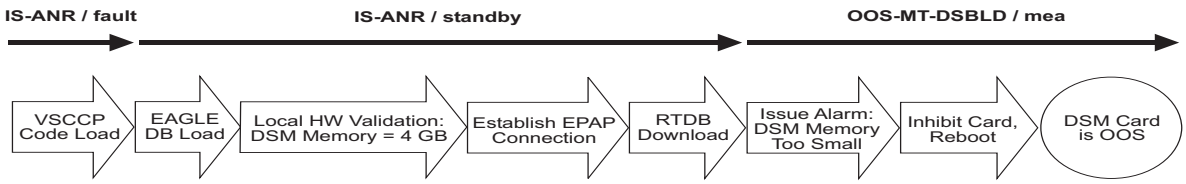

In Figure 5-6, the A-Port feature is enabled, the DSM card is connected to the EPAP, but the RTDB grows eventually to exceed the capacity of the DSM card memory, despite its memory size of 4 GB (an alarm is issued when the DSM memory becomes full from the RTDB update). The A-Port cannot begin operation. Refer to the *Dimensioning Guide for EPAP Advanced DB Features Technical Reference* for important information on the dimensioning rules and the DSM database capacity requirements**.**

Figure 5-6. A-Port Enabled, but Database Exceeds DSM Memory

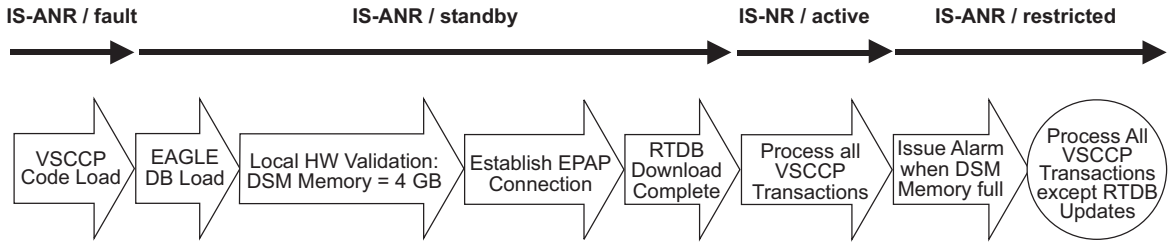

In Figure 5-7, the A-Port feature is not initially enabled; the DSM card memory is 4 GB but no EPAP connection; the DSM card is running other applications when the A-Port feature is enabled and turned on; the DSM has sufficient memory to provide A-Port service.

Figure 5-7. A-Port Not Enabled at First, but then Activated on DSM

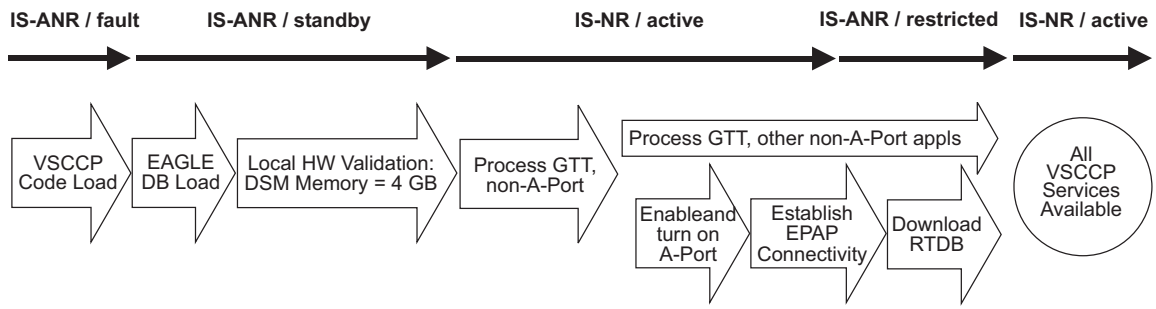

In Figure 5-8, the A-Port feature is not initially enabled; the DSM card memory is 4 GB but no EPAP connection, and is running other applications when the A-Port feature is turned on. However, the DSM card memory is insufficient for the needed database, and the cannot provide A-Port operation. Refer to the *Dimensioning Guide for EPAP Advanced DB Features Technical Reference* for important information on the dimensioning rules and the DSM database capacity requirements**.**

Figure 5-8. A-Port Activation Unsuccessful due to Insufficient Database

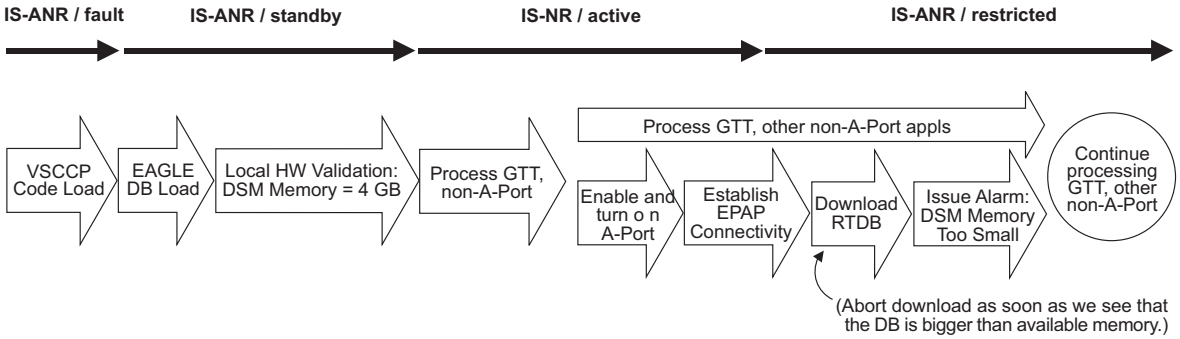

A-Port Alarms

All A-Port related UAMs are output to the Maintenance Output Group. The *Maintenance Manual* contains a complete description of all UAMs. Table 5-1 contains a listing of UAMs used to support the A-Port feature.

Refer to the *EAGLE 5 ISS Maintenance Manual* for more information and corrective procedures for the EAGLE 5 ISS related alarms. Refer to the *MPS Platform Software and Maintenance Manual* for more information and corrective procedures for the MPS related alarms.

Table 5-1. A-Port Related UAMs

UAM	Severity	Message Text	MPS or EAGLE 5 ISS
0013	Major	Card is isolated from system	EAGLE 5 ISS
0084	Major	IP Connection Unavailable	EAGLE 5 ISS
0085	None	IP Connection Available	EAGLE 5 ISS
0099	Major	Incompatible HW for provisioned slot	EAGLE 5 ISS
0250	None	MPS available	MPS
0261	Critical	MPS unavailable	MPS
0328	None	SCCP is available	EAGLE 5 ISS
0329	None	SCCP capacity normal, card(s) abnormal	EAGLE 5 ISS
0330	Major	SCCP TPS Threshold exceeded	EAGLE 5 ISS
0331	Critical	SCCP is not available	EAGLE 5 ISS
0335	None	SCCP is removed	EAGLE 5 ISS
0336	Major	LIM(s) have been denied SCCP service	EAGLE 5 ISS
0370	Critical	Critical Platform Failure(s)	MPS
0371	Critical	Critical Application Failure(s)	MPS
0372	Major	Major Platform Failure(s)	MPS
0373	Major	Major Application Failure(s)	MPS
0374	Minor	Minor Platform Failure(s)	MPS
0375	Minor	Minor Application Failure(s)	MPS
0422	Major	Insufficient extended memory	EAGLE 5 ISS
0423	None	Card reload attempted	EAGLE 5 ISS
0441	Major	Incorrect MBD - CPU	EAGLE 5 ISS
0442	Critical	RTDB database capacity is 95% full	EAGLE 5 ISS
0443	Major	RTDB database is corrupted	EAGLE 5 ISS
0444	Minor	RTDB database is inconsistent	EAGLE 5 ISS
0445	None	RTDB database has been corrected	EAGLE 5 ISS
0446	Major	RTDB Database capacity is 80% full	EAGLE 5 ISS
0447	None	RTDB database capacity alarm cleared	EAGLE 5 ISS
0448	Minor	RTDB database is incoherent	EAGLE 5 ISS
0449	Major	RTDB resynchronization in progress	EAGLE 5 ISS
0451	Major	RTDB reload is required	EAGLE 5 ISS
0526	None	Service is available	EAGLE 5 ISS

Table 5-1. A-Port Related UAMs (Continued)

UAM	Severity	Message Text	MPS or EAGLE 5 ISS
0527	Minor	Service abnormal	EAGLE 5 ISS
0528	Critical	Service is not available	EAGLE 5 ISS
0529	Critical	Service is disabled	EAGLE 5 ISS
0530	None	Service is removed	EAGLE 5 ISS

DSM-EPAP Link

Two alarms are used to indicate the DSM-to-EPAP link status. Refer to the *Signaling Products Maintenance Manual* for more information and corrective procedures for the following alarms.

- **UAM 0084** - IP Connection Unavailable

  This message indicates that an IP application socket is out of service due to a IP link down (Ethernet problem) or due to the DSM card.

```
   station1234 00-09-30 16:28:08 EAGLE 36.0.0
**  5676.0084 ** DSM B   1101          IP Connection Unavailable
```

- **UAM 0085** - IP Connection Available

  This message indicates that a previously broken link between the EPAP and DSM card is now functioning properly.

```
   station1234 00-09-30 16:28:08 EAGLE 36.0.0
   5676.0085    DSM B   1101          IP Connection Available
```

MPS (EPAP) Alarms

The following alarms are output on the EAGLE 5 ISS and include an alarm data string in the output. Refer to the *MPS Platform Software and Maintenance Manual* (except where noted) for more information and corrective procedures for the following MPS related alarms.

- **UAM 0261** - MPS unavailable

  This message indicates that the EAGLE 5 ISS is unable to communicate with the MPS or the MPS has an internal failure. Refer to the *Maintenance Manual* for the corrective action procedure.

  Example:

```
   station1234 00-09-30 16:28:08 EAGLE 36.0.0
*C  0259.0261 *C MPS   B             MPS unavailable
```

- **UAM 0370** - Critical Platform Failure (s)

  This message indicates the application running in the MPS server has detected a critical platform failure. The Alarm Data in the message contains a 16-character hexadecimal string in the format of h'1xxxxxxxxxxxxxxx'. This alarm will be reset when UAM #250, MPS Available is issued.

Example:

```
   station1234 00-09-30 16:28:08 EAGLE 36.0.0
*C  0259.0370 *C MPS   B              Critical Platform Failure(s)
            ALARM DATA = h'1000000000000008'
```

- **UAM 0371** - Critical Application Failure (s)

  This message indicates the application running in the MPS server has detected a critical application failure. The Alarm Data in the message contains a 16-character hexadecimal string in the format of h'2xxxxxxxxxxxxxx'. This alarm will be reset when UAM #250, MPS Available is issued.

  Example:

```
   station1234 00-09-30 16:28:08 EAGLE 36.0.0
*C   0259.0371 *C MPS   B              Critical Application Failure(s)
            ALARM DATA = h'2000000000000001'
```

- **UAM 0372** - Major Platform Failure (s)

  This message indicates the application running in the MPS server has detected a major platform failure. The Alarm Data in the message contains a 16-character hexadecimal string in the format of h'3xxxxxxxxxxxxxx'. This alarm will be reset when UAM #250, MPS Available is issued.

  Example:

```
   station1234 00-09-30 16:28:08 EAGLE 36.0.0
**  0259.0372 ** MPS   B              Major Platform Failure(s)
            ALARM DATA = h'3000000000000002'
```

- **UAM 0373** - Major Application Failure (s)

  This message indicates the application running in the MPS server has detected a major application failure. The Alarm Data in the message contains a 16-character hexadecimal string in the format of h'4xxxxxxxxxxxxxx'. This alarm will be reset when UAM #250, MPS Available is issued.

  Example:

```
    station1234 00-09-30 16:28:08 EAGLE 36.0.0
**   0259.0373 ** MPS   B              Major Application Failure(s)
            ALARM DATA = h'4000000000000008'
```

- **UAM 0374** - Minor Platform Failure (s)

  This message indicates the application running in the MPS server has detected a minor platform failure. The Alarm Data in the message contains a 16-character hexadecimal string in the format of h'5xxxxxxxxxxxxxx'. This alarm will be reset when UAM #250, MPS Available is issued.

  Example:

```
   station1234 00-09-30 16:28:08 EAGLE 36.0.0
*   0259.0374 *  MPS   B              Minor Platform Failure(s)
            ALARM DATA = h'5000000000000004'
```

- **UAM 0375** - Minor Application Failure (s)

This message indicates the application running in the MPS server has detected a minor application failure. The Alarm Data in the message contains a 16-character hexadecimal string in the format of h'6xxxxxxxxxxxxxxx'. This alarm will be reset when UAM #250, MPS Available is issued.

Example:

```
   station1234 00-09-30 16:28:08 EAGLE 36.0.0
*  0259.0375 *  MPS   B            Minor Application Failure(s)
            ALARM DATA = h'6000000000000001'
```

Card Related MPS Alarms

The following alarms are output on the EAGLE 5 ISS. Refer to the *Signaling Products Maintenance Manual* for more information and corrective procedures for the following card related MPS alarms.

- **UAM 0013** - Card is isolated from system

  This indicates a card has become isolated and is unable to communicate to other cards in the system. This could be caused by a defective card, a power failure occurred on the card, or the system software has ordered a reset.

  This also appears when the card has been manually reset by a command.

  Example:

```
   station1234 00-04-30 16:28:08 EAGLE 36.0.0
**  0012.0013 ** CARD 1101 SCCP        Card is isolated from the system
            ASSY SN:  102199815a1234
```

- **UAM 0099** - Incompatible HW for provisioned slot

  This indicates a DCM or DSM card does not have an extended memory. This card is automatically inhibited.

  Example:

```
   station1234 00-04-30 16:28:08 EAGLE 36.0.0
**  0012.0099 ** CARD 1101 VSCCP  Incompatible hardware for provisioned slot
            ASSY SN:  102199815a1234
```

- **UAM 0422** - Insufficient extended memory

  At least one SCCP card does not have enough memory for the A-Port application. Loading of the SCCP card is automatically inhibited.

  Example:

```
   station1234 00-04-30 16:28:08 EAGLE 36.0.0
**  0012.0422 ** CARD 1108  SCCP      Insufficient extended memory
```

- **UAM 0423** - Card reload attempted

  Card loading is no longer inhibited. The once inhibited card is now attempting to load.

  Example:

```
      station1234 00-04-30 16:28:08 EAGLE 36.0.0
   0012.0423    CARD 1108  SCCP      Card reload attempted
```

- **UAM 0441** - Incorrect main board - CPU

  A DSM card does not have the required hardware configuration for the A-Port application.

  Example:

```
   station1234 00-04-30 16:28:08 EAGLE 36.0.0
**  0012.0441 ** CARD 1108  VSCCP      Incorrect MBD - CPU
```

- **UAM 0442** - Insufficient RTDB database capacity

  At least one DSM card does not have at least 4Gb of memory or does not have enough capacity for the RTDB. Loading of the DSM card is automatically inhibited.

  Example:

```
   station1234 00-04-30 16:28:08 EAGLE 36.0.0
*C  0012.0442 *C CARD 1108  VSCCP      RTDB database capacity is 95% full
```

- **UAM 0443** - RTDB database is corrupted

  A RTDB database is corrupt. The calculated checksum did not match the checksum value stored for one or more records.

  Example:

```
   station1234 00-04-30 16:28:08 EAGLE 36.0.0
**  0012.0443 **  CARD 1108  VSCCP      RTDB database is corrupted
```

- **UAM 0444** - RTDB database is inconsistent

  One or more DSM card's real time database is not identical to the current real time database on the active EPAP fixed disks.

  Example:

```
   station1234 00-04-30 16:28:08 EAGLE 36.0.0
*   0012.0444 *  CARD 1108  VSCCP      RTDB database is inconsistent
```

- **UAM 0445** - RTDB database has been corrected

  This message indicates that a problem with the RTDB has been corrected.

  Example:

```
   station1234 00-04-30 16:28:08 EAGLE 36.0.0
   0012.0445    CARD 1108  VSCCP      RTDB database has been corrected
```

- **UAM 0446** - RTDB Database capacity is 80% full

  This message is displayed when a DSM card detects that its daughterboard memory is at least 80% full.

  Example:

```
   station1234 00-04-30 16:28:08 EAGLE 36.0.0
**   0012.0446 **  CARD 1108  VSCCP      RTDB Database capacity is 80% full
```

- **UAM 0447** - RTDB database capacity alarm cleared

  This message indicates that a problem with the RTDB memory has been corrected.

Example:

```
  station1234 00-04-30 16:28:08 EAGLE 36.0.0
  0012.0447    CARD 1108  VSCCP      RTDB database capacity alarm cleared
```

- **UAM 0448** - RTDB database is incoherent

  This message indicates that the RTDB database download is in-process.

  Example:

```
  station1234 00-04-30 16:28:08 EAGLE 36.0.0
*  0012.0448 *  CARD 1108  VSCCP      RTDB database is incoherent
```

- **UAM 0449** - RTDB resynchronization in progress

  This message indicates that the MPS database resynchronization is in-process.

  Example:

```
  station1234 00-04-30 16:28:08 EAGLE 36.0.0
**  0012.0449 ** CARD 1108  VSCCP      RTDB resynchronization in progress
```

- **UAM 0451** - RTDB reload is required

  The RTDB database on the DSM card needs to be reloaded because the resynch log does not contain all of the required updates.

  Example:

```
  station1234 00-04-30 16:28:08 EAGLE 36.0.0
**  0012.0451 ** CARD 1108  VSCCP      RTDB reload is required
```

A-Port Subsystem Alarms

The following alarms are output on the EAGLE 5 ISS for the A-Port subsystem.

- **UAM 0526** - Service is available

  A problem with the specified SCCP service has been corrected. All SCCP cards are IS-NR and have a service status of Active.

  Example:

```
  station1234 00-04-30 16:28:08 EAGLE 36.0.0
  0056.0526    MNP SERVICE         Service is available
```

- **UAM 0527** - Service abnormal

  One or more of the cards providing the specified SCCP service do not have a service status of Active.

  Example:

```
  station1234 00-04-30 16:28:08 EAGLE 36.0.0
*  0056.0527 *  MNP SERVICE         Service abnormal
```

- **UAM 0528** - Service is not available

  The A-Port service is not available. No IS-NR SCCP cards are associated the A-Port service. No SCCP cards providing the A-Port service have a service status of Active.

  Example:

```
   station1234 00-04-30 16:28:08 EAGLE 36.0.0
*C  0056.0528 *C MNP SERVICE          Service is not available
```

- **UAM 0529** - Service is disabled

  The A-Port service has been manually disabled with the chg-sccp-serv command. All IS-NR cards providing the A-Port have service status of Offline.

  Example:

```
   station1234 00-04-30 16:28:08 EAGLE 36.0.0
*C  0056.0529 *C MNP SERVICE          Service is disabled
```

- **UAM 0530** - Service is removed

  The A-Port SCCP service is not equipped. No SCCP cards are configured with the A-Port service.

  Example:

```
   station1234 00-04-30 16:28:08 EAGLE 36.0.0
   0056.0530    MNP SERVICE          Service is removed
```

A-Port UIMs

The EAGLE 5 ISS Maintenance Manual contains a complete description of all UIM text and formats. If A-Port is provisioned, then the following UIMs (Tables 5-2) are used.

Table 5-2. A-Port UIMs

UIM	Text	Description	Action	Output Group (UI Output Direction)
1035	SCCP rsp did not route - invalid GTI	The SCCP response did not route due to an invalid GTI	Use a valid GTI in the CGPA part of the query	gtt
1036	SCCP rsp did not route - invalid TT	The SCCP response did not route due to an invalid TT	Provision the CGPA TT in the GTT TT table	gtt
1037	SCCP rsp did not route - bad Xlation	The SCCP response did not route due to a bad translation	Provision the CGPA GTA address in the GTT database	gtt
1038	SCCP rsp did not route - SSP not True PC	The SCCP response did not route due to SSP is not true point code	Use the true point code in the CGPA point code or OPC of the query	gtt

Table 5-2. A-Port UIMs (Continued)

UIM	Text	Description	Action	Output Group (UI Output Direction)
1039	SCCP rsp did not route - bad Selectors	The SCCP response did not route due to invalid selectors	Provision the CGPA GTI, TT, NP, and NAI in the EGTT selector table	gtt
1130	LOCREQ rcvd - IS412GSM not provisioned	The IS-41 to GSM Migration prefix (specified by the IS412GSM parameter) is not provisioned on this system.	The IS412GSM prefix must be specified in the GSMOPTS table.	gtt
1131	Invalid digits in IS41 MAP Digits parms	The EAGLE 5 ISS encountered an error in decoding the digits parameter in the LocationRequest message.	Correct the digits parameter	gtt
1169	SCCP rcvd inv TCAP portion	This indicates that SCCP discarded a message because the TCAP provided in the called party address is invalid in the EAGLE 5 ISS.	No action is necessary.	application subsystem
1227	SCCP did not route - DPC not in MAP tbl	This message indicates that SCCP did not route a message because the destination point code was not in the mated application (MAP) table. The message was discarded.	If the DPC indicated in the message should not be routed to, no further action is necessary.	gtt
1230	SCCP did not route - SS not in MAP tbl	This message indicates that SCCP did not route a message because the destination subsystem was not in the Mated Application (MAP) table. The message was discarded.	No action is necessary.	gtt
1242	Conv to intl num - Dflt CC not found	Conversion to international number failed because default CC was not found	Define the default CC with **`chg-stpopts :defcc=xxx`**	application subsystem
1243	Conv to intl num - Dflt NC not found	Conversion to international number failed because default NC was not found	Define the default NDC with **`chg-stpopts :defndc=xxxxx`**	application subsystem

Table 5-2. A-Port UIMs (Continued)

UIM	Text	Description	Action	Output Group (UI Output Direction)
1246	Invalid length of conditioned digits	Invalid length of condition- ed digits (length of conditioned international number is less than 5 or greater than 15)	Use an international number with length in the acceptable range	application subsystem
1256	MNP Circular Route Detected	This message indicates the network has incorrect number portability data for a subscriber.	Verify and update number portability data.	application subsystem
1294	Invalid digits in MAP MSISDN parameter	No digits found in MAP MSISDN parameter	Specify valid digits in the MSISDN	application subsystem
1295	Translation PC is EAGLE's	PC translation is invalid because it is one of EAGLE 5 ISS's PCs	Change the point code	application subsystem
1296	Translation PC type is ANSI	PC translation is invalid because it is an ANSI point code	Change the point code	application subsystem
1297	Invalid length of prefix/suffi x digits	Attempted digit action of prefixing entity ID is invalid because combined length of entity ID and GT digits was greater than 21 digits	Change the attempted digit action or decrease the length of the entity ID and/or GT digits	application subsystem
1341	SRI rcvd - GSM2IS41 not provisioned	MIGRPFX=SINGLE and GSM2IS41 prefix is NONE. The GSM to IS-41 Migration prefix is not provisioned on this system.	The GSM2IS41 prefix must be specified in the GSMOPTS table.	gtt

A-Port Related Measurements

Refer to the *Maintenance Manual* for for detailed measurement usage information.

OAM Based Measurements

A-Port measurements are available via the FTA (File Transfer Area) feature and not directly via EAGLE 5 ISS terminals. The File Transfer Area feature supports the transfer of file data between an EAGLE 5 ISS and a remote computer. It provides the capability to download files from the EAGLE 5 ISS via a data

communications link. The data communications link is accessed through a dial-up modem using one of the EAGLE 5 ISS's RS-232 I/O ports. The link is illustrated in Figure 2-7 "Dial-Up PPP Network" on page 2-18.

See the *Commands Manual* for details about using FTA commands, which are:

- Activate File Transfer: **`act-file-trns`**
- Copy to or from Transfer Area: **`copy-fta`**
- Delete Entry from File Transfer Area: **`dlt-fta`**
- Display File Transfer Area: **`disp-fta-dir`**

Measurements Platform

The Measurements Platform (MP) is reqiured for an EAGLE 5 ISS with more than 700 links. It provides a dedicated processor for collecting and reporting EAGLE 5 ISS, LNP, INP, G-FLEX, EIR, Migration, A-Port, and G-PORT measurements data. The interface to the customer's network supports the FTP transfer of Measurements reports to an FTP server. Following collection, scheduled reports are automatically generated and transferred to the customer's FTP server via the FTP interface.

NOTE: Existing FTP file server reports are overwritten by subsequent requests that produce the identical file name.

Reports can be scheduled or printed on-demand. Scheduled and on-demand reports are accessible by the following administrative commands:

- **`chg-measopts`** - Used to enable or disable the automatic generation and FTP transfer of scheduled measurement reports to the FTP server.
- **`rept-stat-meas`** - Reports the status of the measurements subsystem including card location and state, Alarm level, and Subsystem State.
- **`rept-ftp-meas`** - Manually initiates generation and FTP transfer of a measurements report from the MCPM to the FTP server.
- **`rtrv-measopts`** - Generates a user interface display showing the enabled/disabled status of all FTP scheduled reports.

The following Pegs per System measurement peg counts of MSUs (Message Signaling Units) are supported for the A-Port feature (Table 5-3).

Table 5-3. Pegs for Per System A-Port Measurements

Event Name	Description	Type	Unit
APSMSRCV	Number of SMS Request messages received	System	Peg count
APSMSREL	Number of SMS Request messages relayed	System	Peg count
GPSRRCV	Number of call-related SRI messages received	System	Peg count

Table 5-3. Pegs for Per System A-Port Measurements (Continued)

Event Name	Description	Type	Unit
GPSRGTT	Number of call-related SRI messages that fell through to GTT	System	Peg count
GPSRREP	Number of call-related SRI messages that received A-Port service	System	Peg count
GPSRERR	Number of call-related messages that cause errors and SRI Negative ACK	System	Peg count
IS41LRERR	Number of IS-41 Location Request - Error response messages sent.	System	Peg count
IS41LRMRCV	Number of IS-41 Location Request messages received.	System	Peg count
IS41LRRTRN	Number of IS-41 Location Request - Return Result messages sent	System	Peg count

The following Pegs per SSP measurement peg counts of MSUs are supported for the A-Port feature (Table 5-4).

Table 5-4. Pegs for Per SSP A-Port Measurements

Event Name	Description	Type	Unit
APLRACK	Number of call related LOCREQ messages acknowledged.	Point Code	Peg count
APLRRLY	Number of call related LOCREQ messages relayed	Point Code	Peg count
APNOCL	Number of non-call non-LOCREQ related messages relayed	Point Code	Peg count
APNOCLGT	Number of non-call non-LOCREQ related messages that fell through to GTT	Point Code	Peg count
GPSRACK	Number of call-related SRI responses	Point Code	Peg count
GPSRRLY	Number of call-related SRI messages relayed	Point Code	Peg count

The following Pegs for both Per System and Per SSP measurement peg counts of MSUs are supported for the A-Port feature (Table 5-5).

Table 5-5. Pegs for Per System and Per SSP A-Ports Measurements

Event Name	Description	Type	Unit
GPNOCL	Number of non-call-related messages relayed by G-Port	System, Point Code	Peg count

Table 5-5. Pegs for Per System and Per SSP A-Ports Measurements

Event Name	Description	Type	Unit
GPNOCLGT	Number of non-call-related messages that fell through to GTT	System, Point Code	Peg count

Measurement Reports

Measurements are available with these report commands. Refer to the *Commands Manual* for detailed usage information.

The commands are specified as follows, where **xxx** is a three-letter abbreviation for a day of the week (MON, TUE, WED, THU, FRI, SAT, or SUN) and yy is an hour of the day:

- OAM Daily `rept-meas:type=mtcd:enttype=np`
- OAM hourly: `rept-meas:type=mtch:enttype=np`
- MP daily: `rept-ftp-meas:type=mtcd:enttype=np`
- MP hourly: `rept-ftp-meas:type=mtch:enttype=np`

Index

B

C

F

G

H

I

L

M

N

O

P

R

S

T

U

V