Siebel

Remote and Replication Manager Administration Guide

September 2026

Siebel
Remote and Replication Manager Administration Guide

September 2026

F87469-06

Copyright © 1994, 2026, Oracle and/or its affiliates.

Author: Sukanya Mishra

Contents

Get Help i

1 What's New in This Release 1

What's New in Siebel Remote and Replication Manager Administration Guide, Siebel CRM 21.10 Update 1
What's New in Siebel Remote and Replication Manager Administration Guide, Siebel CRM 21.5 Update 1
What's New in Siebel Remote and Replication Manager Administration Guide, Siebel CRM 21.3 Update 1
What's New in Siebel Remote and Replication Manager Administration Guide, Siebel CRM 20.8 Update 2
What's New in Siebel Remote and Replication Manager Administration Guide, Siebel CRM 20.5 Update 2
What's New in Siebel Remote and Replication Manager Administration Guide, Siebel CRM 20.1 Update 3
What's New in Siebel Remote and Replication Manager Administration Guide, Siebel CRM 19.6 Update 3
What's New in Siebel Remote and Replication Manager Administration Guide, Siebel CRM 19.1 Update 3

2 About Siebel Remote 5

About Siebel Remote 5
Overview of Siebel Remote 5
Siebel Mobile Products That Siebel CRM Supports 5
About Using This Book 8
Getting Help from Oracle 9

3 Architecture of Siebel Remote 11

Architecture of Siebel Remote 11
Overview of the Siebel Remote Architecture 11
How Siebel Remote Uses Siebel Servers 15
How Siebel Remote Uses Mobile Web Clients 19
How Siebel Remote Creates Local Databases 21
How Siebel Remote Synchronizes Local Databases 23
How Siebel Remote Manages the Amount of Data It Synchronizes 30
How Siebel Remote Validates and Authenticates Information 33
Other Considerations for Design and Development 36
Roadmap for Implementing Siebel Remote 38

4 Configuring the Siebel Server 39
Configuring the Siebel Server 39
Process of Configuring the Siebel Server 39
Configuring Server Properties and Environment Variables 39
Process of Configuring System Preferences for the Siebel Server 41
Configuring Server Components for Synchronization and Transactions 48
Running the Generate New Database Server Component 49
Options for Configuring the Siebel Server 51

5 Configuring the Remote Client 59
Configuring the Remote Client 59
Process of Configuring the Remote Client 59
Creating a Remote Client 63
Process of Configuring Encryption and Authentication for the Remote Client 68
Controlling the Data That Siebel Remote Routes to Clients 73
Limiting the Views That a Remote Client Displays 76

6 Extracting and Initializing a Remote Server 81
Extracting and Initializing a Remote Database 81
Process of Extracting the Server Database 81
Options for Extracting the Server Database 86
Initializing the Local Database 91

7 Synchronizing the Remote Client 95
Synchronizing the Remote Client 95
Synchronizing the Remote Client 95
Options for Synchronizing and Starting the Remote Client 99
Configuring TrickleSync 106

8 Monitoring and Reporting for Siebel Remote 111
Monitoring and Reporting for Siebel Remote 111
Monitoring and Logging for Siebel Remote 111
Viewing Reports 121

9 Administering Siebel Remote 127
Administering Siebel Remote 127

Doing Basic Configuration and Administrative Tasks 127
Process of Administering Siebel Remote 129
Administering Server Components for Siebel Remote 129
Managing Synchronization 134
Administering the Remote Client 136
Maintaining Siebel Remote 143

10 About Siebel Replication Manager 145
About Siebel Replication Manager 145

11 Implementing Siebel Replication Manager 151
Implementing Replication Manager 151
Process of Implementing Siebel Replication Manager 151
Installing Servers and File Systems on the Headquarters Node 151
Installing Servers and File Systems on the Regional Node 152
Defining the Regional Node 155
Extracting the Regional Database 158
Initializing the Regional Database 162
Configuring the Regional Node to Support Remote Clients 166
Configuring the Replication Agent Server Component 166
Installing Another Siebel Server on the Regional Node 169

12 Administering Siebel Replication Manager 171
Administering Siebel Replication Manager 171
Process of Administering Siebel Replication Manager 171
Guidelines for Doing Administrative Work 180

13 Troubleshooting Siebel Remote 181
Troubleshooting Siebel Remote 181
Troubleshooting a Merge Problem 181
Troubleshooting a Synchronization Manager Problem 184
Troubleshooting a Problem Where the User Cannot View Records Locally 188
Troubleshooting a Large Transaction Backlog Problem 191
Troubleshooting Transaction Router Performance Issues 194
Recovering from a Failure 199
Using Troubleshooting Utilities 204

14 Predefined Routing Models 221
Predefined Routing Models 221
Predefined Routing Models for Siebel Remote 221
Predefined Routing Models for Siebel Financial Services 228

15 Reference Materials for Siebel Remote 233
Reference Materials for Siebel Remote 233
Values for System Preferences 233
Server Component Parameters 235
Field Descriptions for Administration Screens 245
Predefined Administrative Reports 252
Siebel Server Features on a Regional Node 254
Parameters of the Regional Database Initialization Program 257

Get Help

Preface

This preface introduces information sources that can help you use the application and this guide.

Using Oracle Applications

To find guides for Oracle Applications, go to the Oracle Help Center at *https://docs.oracle.com/*.

Documentation Accessibility

For information about Oracle's commitment to accessibility, visit the *Oracle Accessibility Program website*.

Contacting Oracle

Access to Oracle Support

Oracle customers that have purchased support have access to electronic support through My Oracle Support. For information, visit *My Oracle Support* or visit *Accessible Oracle Support* if you are hearing impaired.

Comments and Suggestions

Please give us feedback about Oracle Applications Help and guides! You can send an email to: *oracle_fusion_applications_help_ww_grp@oracle.com*.

1 What's New in This Release

What's New in Siebel Remote and Replication Manager Administration Guide, Siebel CRM 21.10 Update

The following information lists the changes in this revision of the documentation to support this release of the software.

Topic	Description
Server Components That Siebel Remote Uses *Extracting the Server Database*	Modified topics. Added information about a requirement related to the Enable Incremental Indexing system preference, as it relates to the Transaction Processor component.

What's New in Siebel Remote and Replication Manager Administration Guide, Siebel CRM 21.5 Update

The following information lists the changes in this revision of the documentation to support this release of the software.

Topic	Description
Starting and Stopping Replication Agent in the Server Manager Command Line Interface	Modified topic. Updated the step for starting the Replication Agent component.
Parameters of the Regional Database Initialization Program	Modified topic. Updated the description for the File System parameter for the Srvrinit utility.

What's New in Siebel Remote and Replication Manager Administration Guide, Siebel CRM 21.3 Update

The following information lists the changes in this revision of the documentation to support this release of the software.

Topic	Description
Using an Administrative View to Create a Remote Client	Modified topic. Added a step to specify a value for the Runtime Repository Language field when you create a remote client.
Parameters of the Database Extract Server Component	Modified topic. Updated the information about the Database Init Method parameter for the Database Extract component (alias DbXtract). To display the correct value, you must synchronize the component. (The old value works the same, however.)

What's New in Siebel Remote and Replication Manager Administration Guide, Siebel CRM 20.8 Update

The following information lists the changes in this revision of the documentation to support this release of the software.

Topic	Description
Multiple topics	Modified topic. As of Siebel CRM 20.8 Update, Oracle Database SE2 is now used for the local database, replacing Oracle Database XE. The applicable configuration file section is now [LOCAL_SE] instead of [LOCAL_XE]. For more information, see the *Siebel Installation Guide* .

What's New in Siebel Remote and Replication Manager Administration Guide, Siebel CRM 20.5 Update

The following information lists the changes in this revision of the documentation to support this release of the software.

Topic	Description
Extracting a Database for Use with Siebel Tools	Removed topic. As of Siebel CRM 17.0, Siebel Tools no longer supports the local database. The local database is only for use with Siebel Mobile Web Client. Developers now use Siebel Web Tools or Siebel Tools with workspaces in the enterprise Siebel database.

What's New in Siebel Remote and Replication Manager Administration Guide, Siebel CRM 20.1 Update

No new features have been added to this guide for this release. This guide has been updated to reflect only product name changes.

What's New in Siebel Remote and Replication Manager Administration Guide, Siebel CRM 19.6 Update

The following table lists the changes in this revision of the documentation to support this release of the software.

Topic	Description
Configuring TLS Encryption for Siebel Remote *Formatting the DockConnString Parameter* *Parameters of the Synchronization Manager Server Component*	Modified topics. As of Siebel CRM 19.6 Update, Siebel Remote supports Transport Layer Security (TLS) for synchronization with Siebel Mobile Web Clients. The server parameter Communication Type (CommType) now supports the values TLS and None for Synchronization Manager. Additional parameters must be set to specify the certificate files in use. The format for the DockConnString parameter for the Mobile Web Client has also changed. The server parameter Encryption Type (Crypt) is no longer used by Siebel Remote, and RSA and MSCRYPTO encryption are no longer supported for Siebel Remote. The topic "Configuring the Encryption Type" has been revised and renamed to reflect the task of configuring TLS encryption instead.
Various topics	Modified topics. Removed references to modems and related technologies that customers no longer use for Siebel Remote.

What's New in Siebel Remote and Replication Manager Administration Guide, Siebel CRM 19.1 Update

No new features have been added to this guide for this release. This guide has been updated to reflect only product name changes.

2 About Siebel Remote

About Siebel Remote

This chapter provides an overview of Oracle's Siebel Remote. It includes the following topics:

- *Overview of Siebel Remote*
- *Siebel Mobile Products That Siebel CRM Supports*
- *About Using This Book*

Overview of Siebel Remote

Siebel Remote is an Oracle product, part of Siebel CRM, that allows a Siebel Mobile Web Client that typically runs remotely while disconnected to do *synchronization*, which is the process of synchronizing the data that resides on a remote computer with the data that resides on the Siebel Server. Siebel Remote allows disconnected uses to share information with other members of virtual teams and connected users. If the disconnected user enters new data, or updates data in the local database, then the client software for Siebel Remote tracks these modifications as synchronization transactions. Siebel Remote can then upload these transactions from the remote client to the Siebel Server when the user connects to the Siebel Server through a network connection.

The Siebel Server prepares transactions that other users have applied to the server database between synchronizations. Server components then write these transactions to a separate outbox for each user. You can configure Siebel Remote to combine these transactions with updated, published, or requested marketing literature, correspondence templates, and other types of file attachments. Siebel Remote downloads these transactions to the remote client during the next synchronization.

> **Note:** As of Siebel CRM 20.8 Update, Oracle Database SE2 is now used for the local database, replacing Oracle Database XE. The applicable configuration file section is now [LOCAL_SE] instead of [LOCAL_XE]. For information about installation for Oracle Database SE2, see the *Siebel Installation Guide* .

Siebel Bookshelf

This guide assumes that you have successfully installed and set up your Siebel application as described in books like the *Siebel Installation Guide* and *Siebel Applications Administration Guide* . The Siebel Bookshelf is available on Oracle Technology Network (http://www.oracle.com/technetwork/indexes/documentation/index.html) and Oracle Software Delivery Cloud. It might also be installed locally on your intranet or on a network location.

Siebel Mobile Products That Siebel CRM Supports

The following diagram illustrates the hardware platforms where the Siebel CRM product line of mobile applications runs.

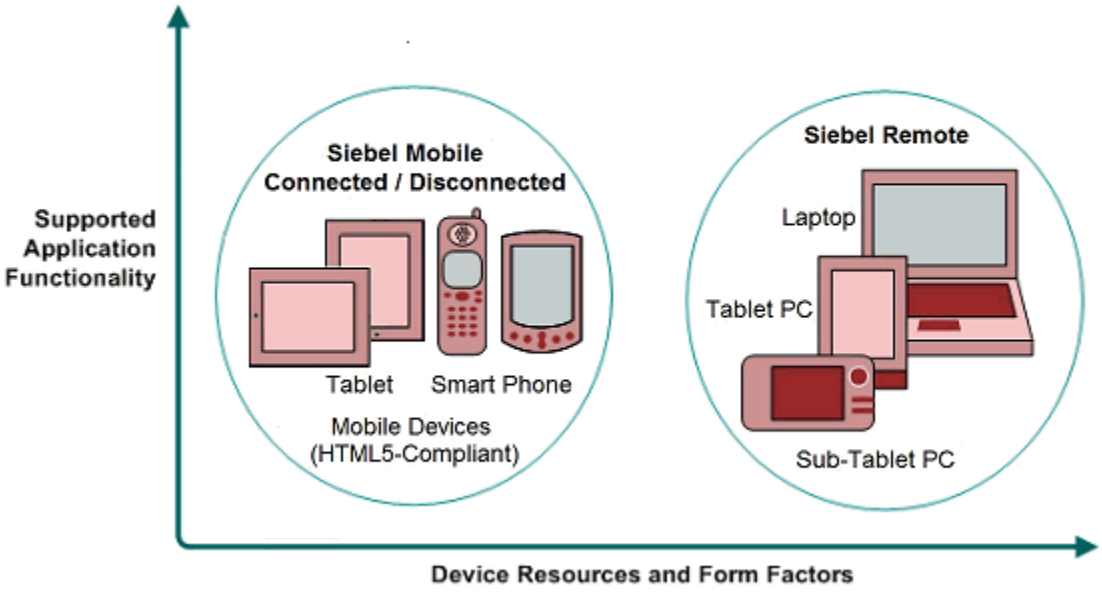

Explanation of Callouts

As shown in this diagram, the Siebel CRM product line includes the following mobile applications:

- **Siebel Remote (supports Siebel Mobile Web Client).** Server software and a disconnected client that is fully functional. Applications that run in the Mobile Web Client and are supported by Siebel Remote provide transaction routing, and data synchronization.
- **Siebel Mobile applications.** Server software and a connected or disconnected client that is optimized for mobile devices.

> **Note:** The Siebel Mobile applications are the latest generation of Siebel CRM mobile products. For more information, see *Siebel Mobile Guide: Connected* and *Siebel Mobile Guide: Disconnected* on the Siebel Bookshelf.

Mobile Product Components and Client Devices That Siebel Remote Supports

The following table describes the mobile product components and client devices that are supported by Siebel Remote and by Siebel Mobile applications.

Product Group	Server Components	Client Component	Supported Client Devices
Siebel Remote	Siebel Remote supports the following server components: • Siebel Remote component group	Siebel Mobile Web Client	Siebel Remote supports the following client devices: • Desktop PCs • Laptop PCs

Product Group	Server Components	Client Component	Supported Client Devices
	• Disconnected Mobile Synchronization component group		• Tablet PCs
Siebel Mobile applications	Siebel Mobile applications support the following server components: • Disconnected Mobile Synchronization component group • Handheld Synchronization SIA component group • Handheld Synchronization component group • BatchSync component group	Siebel Mobile connected applications Siebel Mobile disconnected applications	Siebel Mobile applications support the following client devices: • Tablet PCs • Mobile devices (smart phones)

Mobile Products That Siebel CRM Supports

The following table describes mobile products that Siebel CRM supports.

Product Group	Supported Application	Reference
Siebel Remote	Siebel Remote supports almost all Siebel CRM applications.	You can use the following reference sources: • *Siebel Remote and Replication Manager Administration Guide* (this guide) • *Siebel Installation Guide*
Siebel Mobile Applications	Siebel Mobile connected applications Siebel Mobile disconnected applications	You can use the following reference sources: • *Siebel Mobile Guide: Connected* • *Siebel Mobile Guide: Disconnected*

Tablet Personal Computers That Siebel Remote Supports

Siebel Remote support for tablet personal computers includes the full functionality that Siebel CRM supports, including special functions such as signature capture and personalized content delivery (PCD).

About Using This Book

This book uses the following terms:

- A *Siebel CRM object* is an object that resides in the Siebel Repository. For example, a screen, view, applet, business component, menu, and control and each an example of a Siebel object. For more information, see *Configuring Siebel Business Applications* .
- The *Siebel Mobile Web Client* is a disconnected Siebel CRM client that is fully functional. It typically runs on a laptop computer that a professional in the field uses. For brevity, this book often refers to the Mobile Web Client generically as the *remote client*.
- A *user* is a person who uses the remote client of a Siebel application to access Siebel CRM data.
- The *user interface* is the interface that the user uses in the remote client.
- The *server* is the Siebel Server, unless noted otherwise.
- The *Siebel database* or *server database* is the enterprise database with which the local databases synchronize.
- The *local database* is a database that resides on the remote client. It contains Siebel application tables that store user data and a local transaction log that stores transactions that the user creates.
- An *administrator* is anyone who uses an administrative screen in the administrative client to configure Siebel CRM. The Administration - Server Configuration screen is an example of an administrative screen.
- *Predefined Siebel CRM* is the out-of-the-box version of Siebel Remote that Oracle provides you before you make any customization to Siebel Remote.
- A *predefined object* is an object that comes defined with Siebel CRM. The objects that Oracle's Siebel Tools displays in the Object List Editor when you use Siebel Tools to open a Siebel Repository for editing, but before you make any customizations, are predefined objects.
- The term *focus* indicates the currently active object in the remote client. To indicate the object that is in focus, Siebel CRM typically sets the border of this object to a solid blue line.

Depending on the software configuration that you purchase, your Siebel application might not include all the features that this book describes.

How This Book Indicates Computer Code and Variables

Computer font indicates a value you enter or text that Siebel CRM displays. For example:

```
This is computer font
```

Italic text indicates a variable value. For example, the n and the method_name in the following format description are variables:

```
Named Method n: method_name
```

The following is an example of this code:

```
Named Method 2: WriteRecord
```

How This Book Describes Objects

For brevity, this book describes how an object, such as a user property, does something. For example, this book states the following:

The Copy Contact user property copies contacts.

In strict technical terms, the Copy Contact user property only includes information that some other Siebel CRM object uses to copy contacts.

For brevity, to describe how Siebel CRM uses the value that a property contains, this book typically only describes the property name. For example, assume Siebel CRM displays the value that the Display Name property contains. This is a property of a tree node object. This book only states the following: Siebel CRM displays the Display Name property of the tree node.

In reality, Siebel CRM displays the value that the Display Name property contains.

About Objects and Metadata

A Siebel *object definition* defines the metadata that Siebel Remote uses to run a Siebel application. The Account List Applet that Siebel Tools displays in the Object List Editor is an example of an object definition. It includes metadata that Siebel Remote uses to render the Account List Applet, such as the height and width of all controls in the applet, and all the text labels that it must display on these controls. The *Siebel Repository* is a set of database tables that stores these object definitions. Examples of types of objects include applets, views, business components, and tables. You use Siebel Tools to create or modify an object definition.

The *object manager* hosts a Siebel application, providing the central processing for HTTP transactions, database data, and *metadata*, which is data that the object definitions contain. It is different from *Siebel CRM data*, which is data that is specific to your business, such as account names and account addresses.

For more information, see *Configuring Siebel Business Applications* .

How This Book Describes Relationships Between Objects

An object definition includes properties and a property includes a value. For example, the Business Object property of the Account Address view contains a value of Account. To describe this relationship, this book states the following:

The Account Address view references the Account business object.

Sometimes the relationship between objects occurs through multiple objects. For brevity, this book does not always describe the entire extent of relationships that exists between objects through the entire Siebel object hierarchy. For example, because the Account business object references the Account business component, and the Account Address view references the Account business object, this book states the following:

The Account Address view references the Account business component.

Getting Help from Oracle

To get help from Oracle with configuring Siebel Remote, you can create a service request (SR) on My Oracle Support. Alternatively, you can phone Global Customer Support directly to create a service request or to get a status update

on your current SR. Support phone numbers are listed on My Oracle Support. You can also contact your Oracle sales representative for Oracle Advanced Customer Services to request assistance from Oracle's Application Expert Services.

For more information about Siebel Remote, please search on My Oracle Support for any of your specific issues before creating a service request.

3 Architecture of Siebel Remote

Architecture of Siebel Remote

This chapter describes the architecture that Siebel Remote uses. It includes the following topics:

- *Overview of the Siebel Remote Architecture*
- *How Siebel Remote Flows Data Through the Architecture*
- *How Siebel Remote Uses Siebel Servers*
- *How Siebel Remote Uses Mobile Web Clients*
- *How Siebel Remote Creates Local Databases*
- *How Siebel Remote Synchronizes Local Databases*
- *How Siebel Remote Manages the Amount of Data It Synchronizes*
- *How Siebel Remote Validates and Authenticates Information*
- *Other Considerations for Design and Development*
- *Roadmap for Implementing Siebel Remote*

Overview of the Siebel Remote Architecture

The following diagram illustrates the components of the Siebel Remote architecture.

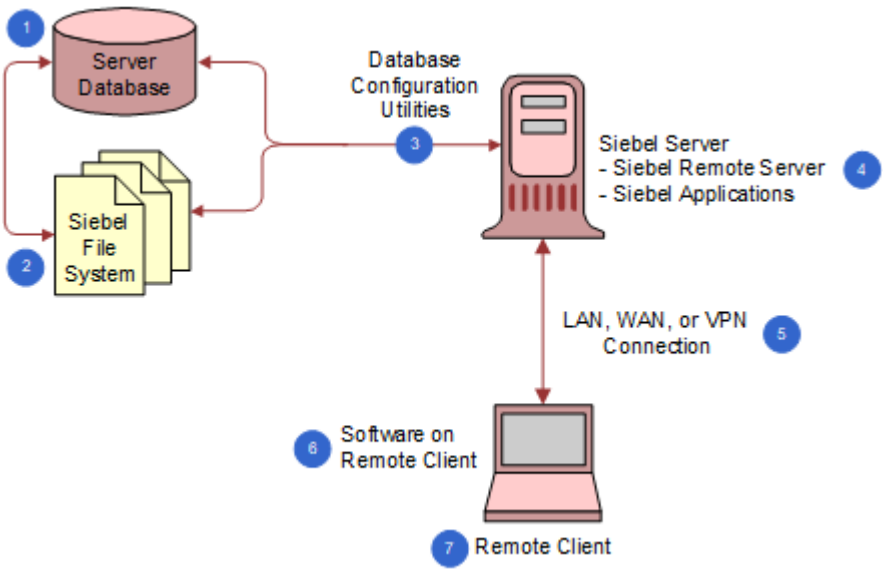

Explanation of Callouts

The Siebel Remote architecture includes the following components:

1. **Siebel database (server database).** A database that stores information about the organizational structure of your company, job responsibilities, sales personnel, sales territories, accounts, sales opportunities, contacts, product lines, and so on. It stores data for users who use a stationary client or a remote client. It contains the following items:
   - Metadata for a Siebel application
   - Tables that store user data for a Siebel application
   - A master transaction log table that stores modifications made since the last database extraction
2. **Siebel File System.** A folder structure that includes items like the following:
   - Siebel Encyclopedia items
   - Correspondence templates
   - File attachments
   - Other files that support client access and download

   The Siebel Server must possess network connectivity to the Siebel File System that might be located on another Siebel Server on the network, or that Siebel CRM uses with the Siebel database. For more information, see *How Siebel Remote Handles Files on Remote Clients*.
3. **Database Configuration Utilities.** You use the Siebel Enterprise Server installer to install these utilities on a Siebel Server. You typically use an ODBC driver and the connectivity package for the database vendor to create the connectivity that these utilities require for their operations, as well as for subsequent operations that involve the Siebel database. You must provide this access over a 100 MB or faster network connection, such as Fast Ethernet or FDDI, due to the amount of data that is exchanged. For more information, see *Installing the Database Configuration Utilities and the Regional Siebel Database on the Regional Node*.
4. **Siebel Server.** A Siebel Server that runs the server components that Siebel Remote uses to manage synchronizations with the remote client. For more information, see *How Siebel Remote Uses Siebel Servers*.
5. **LAN, WAN, or VPN.** The hardware and software that allows the remote client to communicate with the Siebel Server. The remote client uses the TCP/IP networking protocol to communicate with the Siebel Server. You can use the following types of networks:
   - Local Area Network (LAN)
   - Wide Area Network (WAN)
   - Virtual Private Network (VPN)
6. **Software on remote client.** For more information, see *How Siebel Remote Uses Mobile Web Clients*.
7. **Remote client.** A computer that runs a Siebel application that uses a local database and a local file system. The Siebel object definitions are stored in the Siebel database for the Siebel Mobile Web Client. For more information, see *How Siebel Remote Uses Mobile Web Clients*.

How Siebel Remote Flows Data Through the Architecture

The following diagram illustrates the flow of data through the architecture for Siebel Remote. For more information about the server components and files that this architecture uses, see *How Siebel Remote Uses Siebel Servers*.

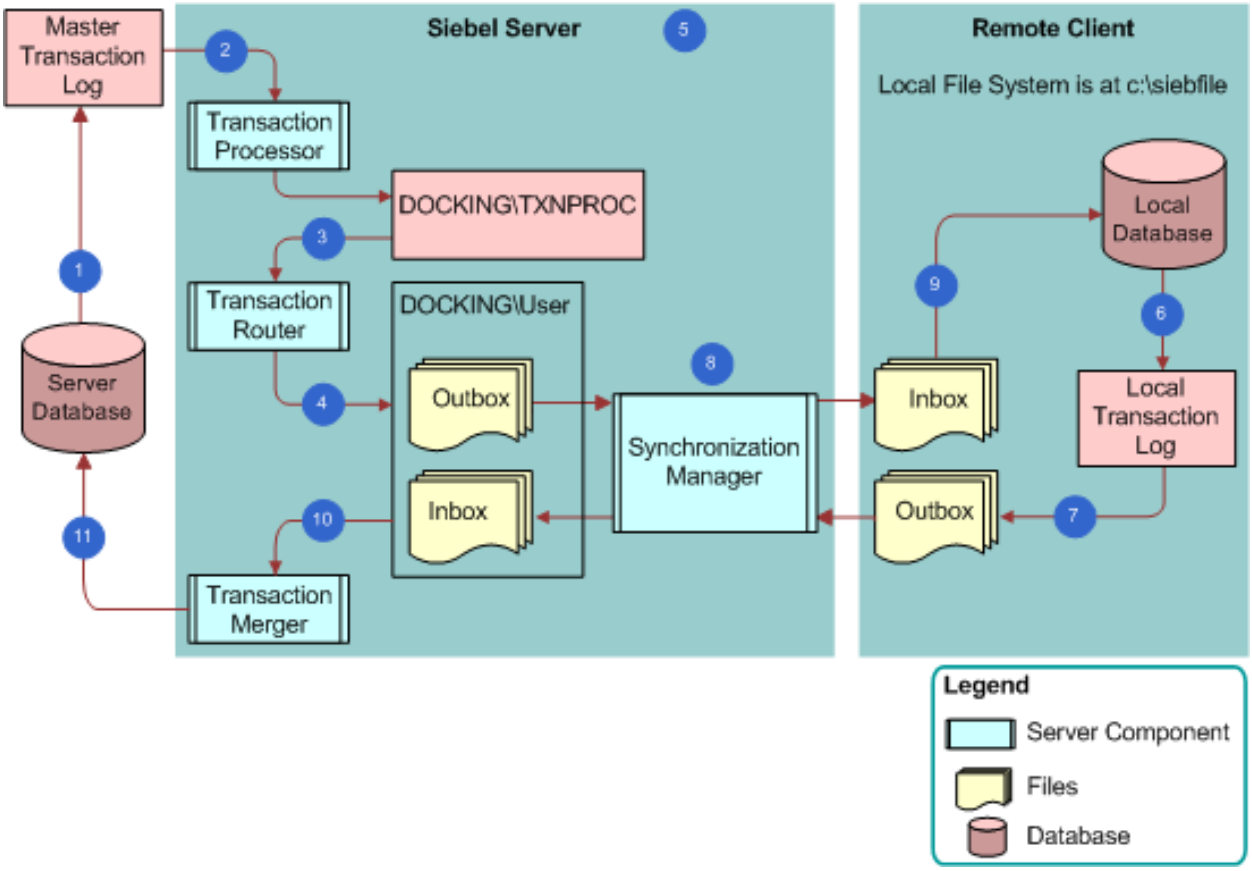

Explanation of Callouts

As shown in this diagram, data flows through the Siebel Remote architecture in the following sequence:

1. Siebel Remote considers every action in the server database as a transaction. These actions include adding and deleting rows, updating rows, and merging rows. It stores a copy of each transaction in the Master Transaction Log table (S_DOCK_TXN_LOG), provided that Siebel CRM does the transaction.

   To minimize the size of the S_DOCK_TXN_LOG table, Siebel Remote stores transactions at the field level. If Transaction Logging is turned on, and if an action occurs, then Siebel Remote stores only the modifications that occurred to fields as transactions. This configuration helps to optimize the synchronization process.

   For more information, see *Modifying the S_DOCK_TXN_LOG Table*.
2. The Transaction Processor server component does the following work:
   - Copies the transactions that exist in the S_DOCK_TXN_LOG table to the `docking\txnproc` folder.
   - Copies the file system transactions that are of type External File from the file system to the `docking\txnproc` folder.
   - Clears the S_DOCK_TXN_LOG table of the transactions.
3. The Transaction Router server component determines the users who must receive the transactions that the `docking\txnproc` folder contains.

4. Siebel Remote creates a docking folder on the Siebel Server for the user the first time that it extracts a database for this user. It does the following work:

    a. Creates an inbox and an outbox folder. The outbox stores any future extracts and DX files that Siebel Remote receives from the Transaction Router.
    b. Sends these DX files to the outbox for each remote client that resides in the `docking` folder on the Siebel Server, according to visibility rules and routing rules.
    c. The Transaction Router finishes the task it is processing, and then configures the Transaction Processor server component to remove any DX files that exist in the `docking\txnproc` folder, according to the following Transaction Processor parameter: Clean DX Files Iterations (alias CleanFilesIter)
5. When you install a Siebel application you specify at least one Siebel Server as a remote server. This Siebel Server hosts all or some of the users and it contains the docking folders for these users. It uses these folders to transfer the files that are involved with the synchronization process. These files include the following items:

    - New database templates that the Generate New Database task creates
    - Database extracts that Siebel Remote uses with the templates to initialize the local database
    - DX files (.dx)
    - TOC files (.toc)
    - Visibility data for the remote client. This data resides in the visdata.dbf file and the dobjinst.dbf visibility database file.
6. The remote client processes any transactions that exist in the local database while disconnected.

    Siebel Remote stores a copy of each transaction in the Local Transaction Log, which is similar to the Master Transaction Log on the Siebel Server. It does not create any audit trail records on the disconnected client. If a Siebel application uses Siebel Audit Trail, then it eventually uses the information that it stores about disconnected transactions to create audit trail records on the Siebel Server. stores a copy of each transaction in the Local Transaction Log, which is similar to the Master Transaction Log on the Siebel Server. It does not create any audit trail records on the disconnected client. If a Siebel application uses Siebel Audit Trail, then it eventually uses the information that it stores about disconnected transactions to create audit trail records on the Siebel Server.
7. If the user starts the synchronization process, then the remote client creates DX files from the log, and then moves these DX files to the remote client outbox.
8. The synchronization process begins when the remote client starts a synchronization.

    The Synchronization Manager server component must be running. It authenticates the remote client according to the type of authentication that the parameters for the Synchronization Manager specify.

    The synchronization process includes handling communication between the remote client and the file system. It moves the DX files from the outbox of the docking folder to the inbox on the remote client. It also moves files from the outbox on the remote client to the inbox of the docking folder. It copies any attachments, correspondence, or templates that the remote client creates to the Siebel File System.
9. The remote client applies the DX files to the local database as soon as it receives the first transaction file or after it completes the file exchange with the Siebel Server, depending on the user synchronization options or command line options that you choose. Siebel Remote does not modify the server database until the file exchange finishes and the remote client disconnects.
10. The Transaction Merger server component on the Siebel Server pulls the DX files from the inbox in the docking folder.

11. The Transaction Merger applies the modifications to the server database.

    If your Siebel application uses Siebel Audit Trail, then the Transaction Merger places information about disconnected transactions that synchronize successfully to the server database tables that Siebel Audit Trail uses.

    The Transaction Merger also identifies synchronization conflicts. The System Conflict Resolution system preference uses one of the following values to determine if the Siebel Server or the remote client wins during conflict resolution:

    - Server Wins
    - Client Wins

    Siebel Remote communicates any conflicts that exist to the user during the next synchronization.

    The Transaction Merger deletes any DX files that reside in the inbox in the docking folder.

    The Transaction Merger does not create audit records for a disconnected transaction that does not synchronize. If the user approves a disconnected transaction that Siebel Remote detects as a conflict, then the Transaction Merger creates audit information on the Siebel Server when the user approves the transaction.

How Siebel Remote Uses Siebel Servers

This topic describes how Siebel Remote uses the Siebel Server. For a visual representation of where some of the components that this topic describe reside on the Siebel Server, see *How Siebel Remote Flows Data Through the Architecture*.

About the Siebel Enterprise and the Siebel Enterprise Server

A *Siebel Enterprise* is a system that includes all users on all Siebel Servers in an environment that includes multiple Siebel Servers. The *Siebel Enterprise Server* is a logical grouping of Siebel Servers that support a group of users who access a common server database in a multiple server environment. You can configure, manage, and monitor the Siebel Servers that the Siebel Enterprise Server contains as a single, logical group that allows you to start, stop, monitor, or set parameters for all of these servers. For an example of a Siebel Enterprise, see the figure in *Hierarchy of a Siebel Replication Manager Implementation*. For more information, see *Siebel System Administration Guide* .

Server Folders That Siebel Remote Uses for Remote Clients

Siebel Remote uses a separate folder and subfolders that reside on the Siebel Server for each registered remote client. The Database Extract server component creates these folders.

> **CAUTION:** The installation program creates a folder named `txnproc` in the `SIEBEL_ROOT\docking` folder. You must not modify the contents of this folder under any circumstances.

The following example includes a portion of the tree of the Siebel Server folder after Siebel Remote extracts databases for remote clients named Adams and Scott:

```
siebel
 docking
 adams
 inbox
 outbox
 scott
 inbox
 outbox
 txnproc
```

Server Components That Siebel Remote Uses

The following table lists some of the server components that Siebel Remote uses. For more information, see *Server Component Parameters*.

For deployments of Siebel Remote or Siebel Replication Manager, you must enable both the Siebel Remote component group and the Disconnected Mobile Synchronization component group on the same Siebel Server.

The MobileSync component group includes components used by Siebel Remote, Siebel Replication Manager, and the Siebel Mobile disconnected applications. The following components were formerly part of the Siebel Remote component group: Database Extract, Parallel Database Extract, Transaction Processor, and Transaction Router.

Server Component	Alias	Log File Name
Siebel Remote component group (alias Remote)		
Generate New Database	GenNewDb	GenNewDb_taskId.log
Replication Agent	RepAgent	RepAgent_taskId.log
Synchronization Manager	SynchMgr	SynchMgr_taskId.log
Transaction Merger	TxnMerge	TxnMerge_taskId.log
Disconnected Mobile Synchronization component group (alias MobileSync)		
Database Extract	DbXtract	DbXtract_taskId.log
Parallel Database Extract	PDbXtract	Not applicable
Transaction Processor	TxnProc	TxnProc_taskId.log
Transaction Router	TxnRoute	TxnRoute_taskId.log

Generate New Database Server Component

The Generate New Database server component (alias GenNewDb) creates the local database template for a schema version of the server database. It reads the schema definition from the Siebel runtime repository, and then creates Siebel tables and indexes in a database template file that Siebel Remote stores in the `SIEBEL_ROOT\dbtempl` folder. The Local Database Initialization program uses the local database template when it initializes a new database on the remote client. For more information, see *Running the Generate New Database Server Component*.

Dictionary Data That Supports Multiple Languages

The dicdata.dat file and the diccache.dat file are the same dictionary file. Siebel Remote names the dicdata.dat file differently for the remote client. These files store metadata about schema definitions, visibility rules, and other items. The Generate New Database server component copies the diccache.dat file to the dicdata.dat file in the `dbtempl` folder. Siebel Remote downloads the dicdata.dat file to the remote client, and then uses it during synchronization when it applies transactions to the local database. For help with interchanging the dicdata.dat file between remote clients to support different languages, see *Getting Help from Oracle*.

Database Extract Server Component

The Database Extract server component (alias DbXtract) creates a snapshot file of the server database for each user. This file contains the data that Siebel Remote uses to initialize the local database. Database Extract gets data according to routing rules that define the level of access to information for each remote client. For more information, see *Extracting the Server Database*, and *Extracting Regional Databases in Parallel*.

Synchronization Manager Server Component

The Siebel Server starts a task for the Synchronization Manager server component (alias SynchMgr) for each incoming synchronization request that it receives from a remote client. This task does the following work for each request:

- Verifies the status and credentials of the remote client, provided that authentication for Siebel Remote is enabled. Credentials include user ID and password.
- Transfers the local database template and local database extract, if applicable.
- Exchanges transaction files.
- Transfers file attachments to and from the Siebel File Server.

Each Synchronization Manager task services only one remote client at any one time. The Siebel Server can run multiple synchronization tasks concurrently. You can use the Max Task parameter of the Synchronization Manager server component to configure this behavior. You must configure the Synchronization Manager for the user to allow the remote client to connect to the Siebel Server. Siebel Remote starts tasks for Synchronization Manager automatically. It is not necessary for you to manually start these tasks.

The Siebel File System parameter of the Synchronization Manager server component identifies the location of the file system for the remote client.

Transaction Processor Server Component

The Transaction Processor server component (alias TxnProc) scans the master transaction log of the Siebel database, and then prepares transactions for the Transaction Router server component. A single Transaction Processor process runs on each Siebel Remote server where there are active nodes to be routed. The prepared transactions are saved as DX files in the `docking\txnproc` folder.

Note: After you have enabled the Disconnected Mobile Synchronization component group (alias MobileSync), the component group has the state Partly Offline. The reason for this is that the Transaction Processor component has the state Not Online. After you run the Database Extract component (alias DbXtract), then you can start TxnProc. After this, the component group has the state Online.

Note: However, when the Enable Incremental Indexing system preference is set to True, the Transaction Processor component (alias TxnProc) runs automatically. The TxnProc component has the status Running and the MobileSync component group has the status Online. In this case, you must stop TxnProc before you run the DbXtract for the first time. After DbXtract has completed, then you can restart TxnProc. If you do not follow these steps, then some transactions might not be routed to remote clients. See also *Requirements for Extracting the Server Database*.

Transaction Router Server Component

The Transaction Router server component (alias TxnRoute) examines the transactions that the Transaction Processor saves as DX files in the `docking\txnproc` folder. It determines visibility and routing for each transaction. Routing rules determine the dock object instances that Siebel Remote copies to each remote client. After Transaction Router has processed the DX files, they are automatically purged. For more information, see *Optimizing the Transaction Router Server Component*.

Transaction Merger Server Component

The Transaction Merger server component (alias TxnMerge) applies transactions to the Siebel Database that the user uploads to the Siebel Server inbox. It applies these transactions to the server database after the synchronization finishes and the remote client disconnects. For more information, see *Optimizing the Transaction Merger Server Component*.

How Siebel Remote Makes Sure Server Components Can Run Concurrently

Siebel Remote uses the following rules and behaviors to make sure server components can run successfully in a concurrent environment:

- The Transaction Processor server component can run while any other server component runs.
- Each Siebel Server can use only one Transaction Processor.
- Only one instance of the Transaction Router, Transaction Merger, Synchronization Manager, or Database Extract server components can process a remote client at any one time:
    - Two Transaction Router server processes cannot route transactions to the same remote client at the same time.
    - Two Transaction Merger processes cannot merge transactions from the same remote client at the same time.

  To improve performance, multiple instances of these server components can run on one Siebel Server.
- The following server components cannot process a remote client while a database extract is in progress for that client:
    - Transaction Router
    - Transaction Merger
    - Synchronization Manager
- If a Transaction Router, Transaction Merger, or Synchronization Manager resides on the same Siebel Server, then they can process the same remote client at the same time.

- Multiple instances of Database Extract that run at the same time allow Siebel Remote to extract multiple lists of users. This configuration reduces the duration of the overall extract.

About Redundant Disks on the Siebel Server

Each Siebel Server manages a distinct group of users that Siebel Remote assigns to this server. Other applications, such as Oracle's Enterprise Integration Manager (EIM), might run on the same Siebel Server. To maintain a high level of integrity and availability, the Siebel Server provides an interim storage area for the data that Siebel Remote requires to synchronize a local database with the Siebel database. It is recommended that you use a redundant disk configuration for the Siebel Server. Using redundant disk configuration reduces the likelihood that malfunctioning hardware will result in a loss of data on the Siebel Server. If a malfunction does occur, then you can reextract the remote clients that are registered on the affected Siebel Server.

How Siebel Remote Uses Mobile Web Clients

The *Mobile Web Client* is a disconnected Siebel CRM client that is fully functional. It typically runs on a laptop computer that a professional in the field uses. For brevity, this book refers to the Mobile Web Client generically as the *remote client*, and the person who uses this remote client as the *user*. The remote client includes the following items:

- Local database and file system
- Local Database Initialization Program

This local database and file system contain data and files that Siebel Remote synchronizes with the database and the Siebel File System that reside on the Siebel Server. The remote client manages this synchronization process. It communicates directly with the Synchronization Manager server component on the Siebel Server during synchronization.

The Siebel application that runs on a remote client runs in a typical Web browser. The architecture layers of a Siebel application, including the local database and file system, reside on the remote client and run business logic locally. This architecture requires you to install Siebel CRM on each client computer.

The remote client includes a lightweight HTTP listener that listens on a dynamic port for HTTP requests from the local computer. Siebel Remote ignores requests from other computers on the network. Minimal security risk exists when the user uses the Siebel application on the network.

> **Note:** After a remote client computer restarts, it is recommended for users to wait a few minutes before starting the Mobile Web Client. This is to allow the Oracle Database SE2 services sufficient time to be fully up and running.

How Siebel Remote Handles Files on Remote Clients

The *Siebel File System* is a file system that stores attachments, correspondence, templates, and other types of unstructured data for the user. It uses the File System Manager server component. A connected user accesses files from the Siebel File System. A *connected user* is a user who connects directly to the Siebel Server. The Siebel Server can transfer files between the user and the file system during synchronization.

The File System Manager server component manages the Siebel File System, handles interplatform security, and handles most of the interactions with the Siebel File System that resides in the Siebel application. The Synchronization Manager server component also interacts with the Siebel File System during a synchronization. The Web Client, Developer Web Client, and server components that use these files can use the Server Request Broker to make requests to the File System Manager.

The *local database* is a database that resides on the remote client. It contains Siebel application tables that store user data and a local transaction log that stores transactions that the user creates. Siebel Remote copies these transactions to the Siebel Server when the remote client synchronizes.

The Siebel Server sends the Siebel File System files that reside on this server to the local Siebel File System that resides on the remote client. The remote client uses these local files when the user disconnects from the Siebel Server. During synchronization, Siebel Remote uploads any files that the user added to the local Siebel File System while disconnected. It uploads these files to the Siebel File System that resides on the Siebel Server. The user can also request files to download to the local file system during synchronization. You can specify the files that Siebel Remote publishes or distributes to users. For more information, see *Siebel System Administration Guide* .

Requirements for Remote Clients

The following requirements are mandatory for the remote client:

- Each remote client must use exactly one local database at any one time.
- Only one user can access the local database at any one time. Siebel Remote does not support multiple logins.
- You must not rename any folder that contains software for the remote client.
- You must not rename or delete any DX file.
- You must not directly modify the local transaction log under any circumstances.

CAUTION: Never directly modify the local transaction log. The Synchronization Client automatically removes all entries from the local transaction log table.

To optimize performance, it is recommended that the user defragment the local hard drive regularly. For more information, see the defragment policies for your company.

Configuration Options That You Can Specify for Remote Clients

You can specify the following options when you configure a remote client:

- **DockConnString.** A parameter in the configuration file that specifies how to synchronize to the Siebel Server. For more information, see *Modifying the Siebel Configuration File for Siebel Remote* and *Formatting the DockConnString Parameter*.
- **EIM.** For more information, see *Using EIM to Create Multiple Siebel Remote Clients*.

Synchronization Options That Users Can Choose

The user can do one of the following to synchronize the remote client:

- **Background synchronization.** The user chooses the File menu, and then the Synchronize Database menu item while the remote client is running. This action starts the remote client as a background process so that the user can continue to use a Siebel application or other Windows applications during the synchronization process.
- **Stand-alone synchronization.** The user uses the Siebel Remote icon or a scheduling program from a third party. This action allows the user to synchronize without starting the Siebel application. TrickleSync also does

a stand-alone synchronization when it starts a synchronization session. For more information, see *How Siebel Remote Uses TrickleSync to Manage Synchronization Frequency*.

For more information, see *How Siebel Remote Synchronizes Local Databases*.

How Siebel Remote Uses TrickleSync to Manage Synchronization Frequency

TrickleSync is a feature that improves usability by increasing how frequently Siebel Remote synchronizes. Frequent synchronization decreases transaction volume for each session and shortens the average connect time. The user can use the DB Synchronization view of the User Preferences screen to enable or disable TrickleSync. It is recommended that the user synchronize with the Siebel Server at least daily.

The TrickleSync agent runs in the background at scheduled times to do an automatic synchronization when the remote client is connected to the network. You can enable a synchronization reminder that prompts the user to synchronize if a specified period of time expires without doing a synchronization. The user can call TrickleSync from the remote client or you can configure TrickleSync for the user. In earlier Siebel CRM versions, TrickleSync was known as autosynchronization. For more information, see *Configuring TrickleSync*.

Visibility Modifications That Affect Access to Records

Siebel Remote does not typically lose transactions after a client reextract. However, if a visibility modification exists that prevents the user from accessing a record in the future, then any transactions that the user makes to this record that Siebel Remote has not synchronized are lost when it reextracts the user. For information about saving client transactions, see *Extracting the Server Database*.

Remote Client Usage in a Development Environment

The software that you install for the Mobile Web Client is the same software that you install for the Developer Web Client in earlier releases. Oracle only supports the Developer Web Client in a test environment. The installation program requires more input to install a Developer Web Client than it does to install a Mobile Web Client. If you do all the setup steps for the Developer Web Client that you typically do for a Mobile Web Client, including registering the user as a Mobile Web Client and extracting a local database, then the Developer Web Client uses the local database and local Siebel File System and you can use it in a test environment the same way that you use a Mobile Web Client in a production environment. You must also modify the configuration file that the Developer Web Client references so that it uses test versions of the server database and the Siebel File System. For more information, see *Modifying the Siebel Configuration File for Siebel Remote*.

How Siebel Remote Creates Local Databases

This topic describes how Siebel Remote creates, extracts, and initializes the local database.

When you configure a Siebel Server for the first time, you must create a new *database template*, which is a database that contains no user data but that contains the structure that Siebel Remote uses to work with a Siebel application. You run the Generate New Database server component to create a new database template. This server component creates a template and places it in the `dbtempl` folder on the Siebel Server. For more information, see *Running the Generate New Database Server Component*.

The user must exist in Siebel CRM as a user before Siebel Remote can register this user. For information on adding a user to Siebel CRM, see *Siebel Applications Administration Guide* .

How Siebel Remote Extracts Local Databases

The first step in creating a local database for a new user is to extract the server database on the Siebel Server. You run the Database Extract server component to extract a remote client. It extracts visible data for the user to a snapshot file in the outbox folder of the Web client on the Siebel Server. This extract gets data according to the routing rules that define the level of access to information for each remote client. It creates compressed files that contain data that Siebel Remote loads to a local database when the remote client starts a synchronization with the server database. Each local database is unique. A user cannot use multiple computers with the same remote client.

The following diagram illustrates how Siebel Remote extracts a local database.

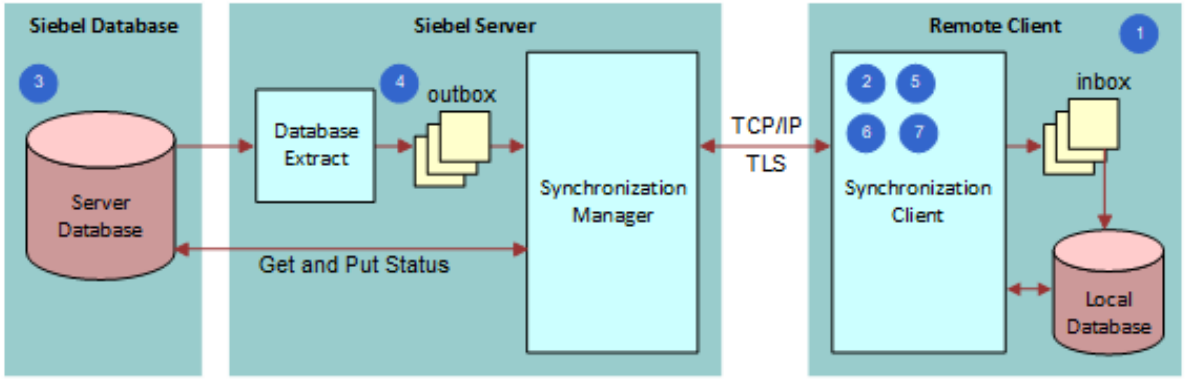

Explanation of Callouts

Siebel Remote does the following work to extract a local database:

1. **Prompt for connect information.** Prompts the user to enter the user ID, the name of the remote client, and a password. A user might use multiple clients, such as two clients on two separate computers. If the user starts the remote client to initialize the database, then Siebel Remote sets the user ID to the value that the user provides, by default.
2. **Connect.** Siebel Remote does the following work:
   - If the user can access the Siebel Server, and if the port for the Synchronization Manager is open, then the Synchronization Client connects to the Siebel Server.
   - Siebel Remote starts a new synchronization thread for the remote client. For example, a VPN setup might require the user to enter a special PIN (personal identification number) and security number.
3. **Validate remote client.** The Synchronization Manager does the following work:
   a. Validates the node name of the remote client with the list of valid users that exist in the server database.
   b. Makes sure that the remote client is connected to the correct Siebel Server.
   c. If authentication for Siebel Remote is turned on, then it authenticates the remote client credentials.

4. **Confirm status of database extract.** The Synchronization Manager does the following work:
    a. Verifies that a database extract is pending in the outbox on the Siebel Server.
    b. Determines if UAF files or TOC files exist in the outbox folder for the user. If it does not find these files, then the Synchronization Client prompts the user to contact the Siebel administrator to do a database extract.
5. **Download snapshot and file attachments.** Prompts the user to download a new database. The Synchronization Client downloads the extract and file attachments to the inbox folder on the remote client.
6. **Disconnect.** The Synchronization Client closes the connection with the Synchronization Manager. The user can disconnect from the network.
7. **Create and load database.** The Synchronization Client shuts down the Siebel Remote remote client or program, and then starts the Siebel Upgrade Wizard. This wizard does the following work:
    - Creates a new local database
    - Loads data from the extract file to the local database
    - Applies file attachments to the local file system

For more information, see *Initializing the Local Database*.

How Siebel Remote Initializes Local Databases

If Siebel Remote determines that all of the following items are true, then it does an initialization:

- A user logs in for the first time.
- A local database does not exist.
- The user specifies the local database as the data source.

Initialization is the process of configuring a remote client. This work includes making sure connect information is correct, validating that the remote client is connected to the correct Siebel Server, extracting a database to a new local database, and so on.

How Siebel Remote Synchronizes Local Databases

This topic describes how Siebel Remote synchronizes local databases. It includes the following information:

- *Overview of How Siebel Remote Synchronizes Local Databases*
- *How Siebel Remote Synchronizes Data That Users Modify*
- *How Siebel Remote Resolves Conflicts in Data It Synchronizes*
- *How Siebel Remote Synchronizes File Attachments*

For more information, see *How Siebel Remote Manages the Amount of Data It Synchronizes*.

Overview of How Siebel Remote Synchronizes Local Databases

The following diagram illustrates how Siebel Remote synchronizes the data that a local database contains with the data that the server database contains.

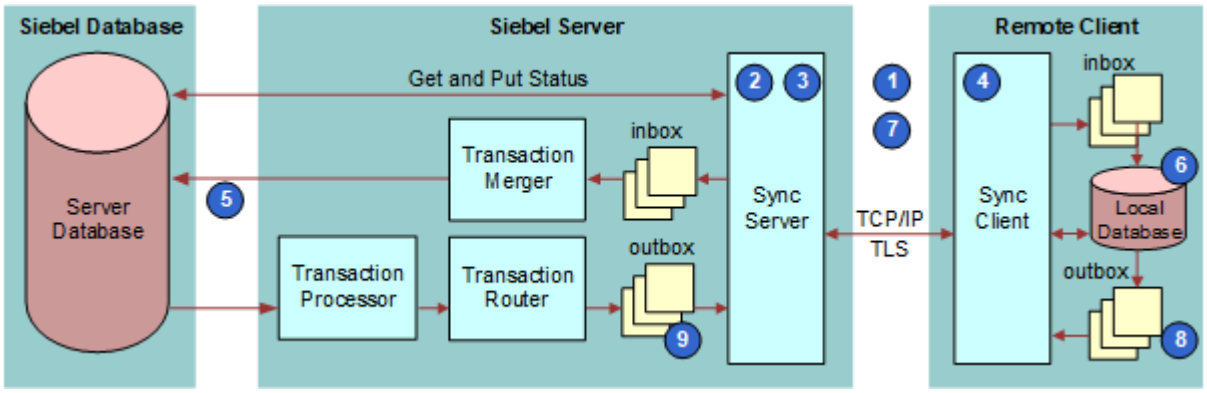

Explanation of Callouts

As shown in this diagram, Siebel Remote does the following work to synchronize the remote client any time a user logs into an existing client:

1. **Connect.** Siebel Remote does one of the following:
   - If the remote client is connected to the Siebel Server through a LAN, WAN, or VPN connection, then Siebel Remote does a handshake to validate that a network connection exists.
2. **Validate the remote client and examine the version.** Synchronization Manager does the following work:
   - **Validates the remote client**:
     - Validates the remote client name with the list of valid remote client names that exist in the server database.
     - Verifies that the remote client is connected to the correct Siebel Server. If it is not, then Synchronization Manager reconnects the remote client to the server, and then updates the local configuration information on the remote client.
     - If authentication for Siebel Remote is turned on, then the Synchronization Manager authenticates the remote client credentials.
   - **Examines the version**. Synchronization Manager uses data on the Siebel Server to make sure the remote client runs the current version of the Siebel application. If the remote client is not running the current version, then Synchronization Manager prompts the user to download a new version of the Siebel application.
3. **Examine database extract.** Synchronization Manager does the following work:
   - Determines if a database extract is pending for the remote client.
   - If a database extract is not pending, then the synchronization continues.
   - If a database extract is pending, then the Synchronization Client uses the process described in *How Siebel Remote Initializes Local Databases* to reinitialize the remote client. Siebel Remote starts another synchronization in this situation.

4. **Get and send transactions and file attachments.** The remote client does the following work:
    - **Gets transactions and file attachments**:
        - Gets transaction files that the Transaction Router creates. It creates these files from the outbox folder of the remote client that resides on the Siebel Server.
        - Stores the transaction files in the local inbox folder on the remote client.
        - Gets any file attachments from the Siebel File Server that the user requests, publishes, or broadcasts.
    - **Sends transactions and file attachments:**
        - Extracts pending transactions from the local transaction log to the transaction files.
        - Sends the transaction files to the user inbox folder that resides on the Siebel Server.
5. **Apply modifications to the server database.** The Transaction Merger applies the incoming transaction files from the user inbox folder that resides on the Siebel Server to the server database, and then applies retrieved file attachments to the Siebel File System.
6. **Apply modifications to the local database.** The remote client does the following work:
    - Applies the incoming transaction files from the inbox folder that resides on the remote client to the local database that resides on the remote client
    - Applies retrieved file attachments to the local file system that resides on the remote client

    The user can use the remote client while this client applies modifications to the local database.

    The timing for applying the incoming transactions depends on the options that you choose. The remote client begins applying transactions as soon as Siebel Remote downloads the first transaction file, by default. You can do the following to configure the remote client to apply transactions only after download finishes, or to postpone applying transactions until a later time:
    - **Use command line options.** For more information, see *Using the Stand-Alone Synchronizer*.
    - **Use synchronization options.** For more information, see *Synchronizing the Remote Client*.
7. **Disconnect.** Siebel Remote closes the connection with the Siebel Server, and then does one of the following, depending on whether the remote client created the network connection automatically:
    - **Created connection automatically.** It closes the connection.
    - **Did not create connection automatically.** The user can manually disconnect from the network.
8. **Clean up on the remote client.** The remote client deletes any transaction files that exist in the local outbox folder on the remote client. These are files that the Transaction Merger successfully applied to the server database during the previous synchronization.
9. **Clean up on the server.** The Synchronization Manager deletes any transaction files that exist in the outbox folder on the Siebel Server for the remote client that Siebel Remote successfully applied to the local database during the previous synchronization.

How Siebel Remote Minimizes Connect Time

The Transaction Router and Transaction Merger server components continuously route and apply transactions for remote clients. It does this work to minimize the connect time that occurs between the remote client and the Siebel Server. These server components process data asynchronously from the synchronization sessions. One or more Transaction Router tasks continuously do the following work:

- Route outgoing transactions to the outbox folders that reside on the remote client. These transactions reside in the `docking\txnproc` folder. The Transaction Processor creates these transactions.

- Merge incoming transactions from the inbox folders that reside on the remote client to the server database and the Siebel File System that reside on the Siebel Server.

How Siebel Remote Synchronizes Data That Users Modify

The Siebel Server prepares transactions that other users apply to the server database between synchronizations. Server components on the Siebel Server write these transactions to a separate folder for each user that resides on the server. Siebel Remote downloads these transactions and other items from the file system to the remote client during the next synchronization. Items in the file system include updated, published, or requested marketing literature, correspondence templates, and other types of file attachments. A similar process occurs on the remote client, although without using the server component.

Scenario for Synchronizing Modified Data with Connected Users

This topic describes how Siebel Remote downloads data that users have modified from the server database to the local database. It describes the steps that occur when a connected user creates a new opportunity until Siebel Remote displays this opportunity in the local database. It describes a telesales user who works in a Call Center who talks with a potential customer who is replying to a new advertising campaign.

The following diagram illustrates a scenario for synchronizing data with a connected user.

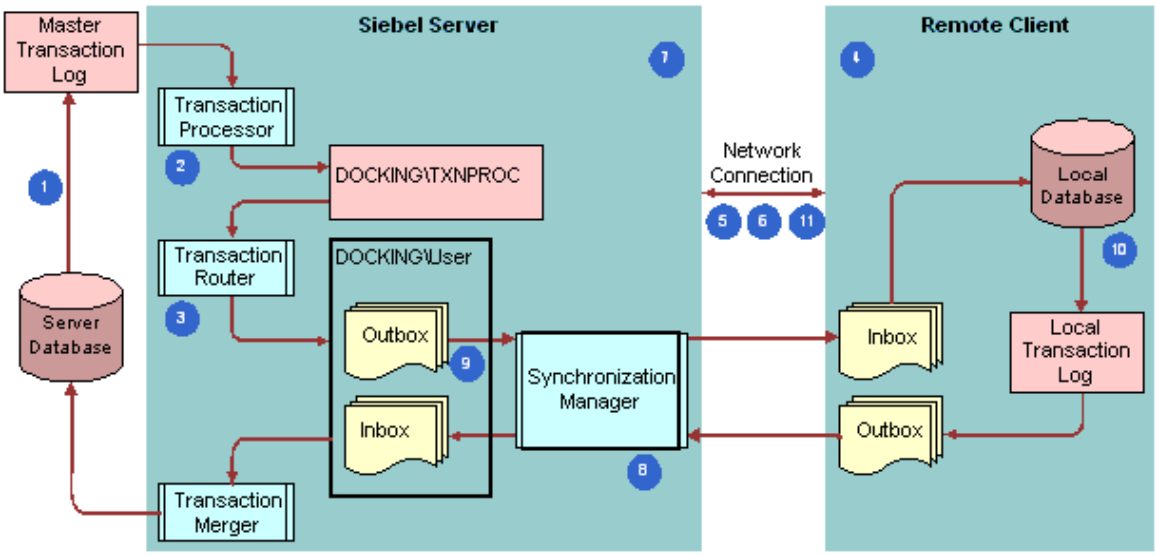

Explanation of Callouts

As shown in this diagram, Siebel Remote does the following work to synchronize data with a connected user:

1. A telesales user creates a new opportunity. Siebel Remote saves this opportunity as a transaction in the opportunities table on the server database. It saves a copy to the master transaction log.
2. The Transaction Processor copies this transaction and other transactions to the Siebel Server.
3. A Transaction Router task writes each transaction from the `docking\txnproc` folder to transaction files that reside in separate outbox folders for each remote client. Siebel Remote stores these outbox folders on the remote client on the Siebel Server.

4. The user starts a synchronization from the remote client.

   Siebel Remote performs the remaining steps to download the new opportunity to the local database during the synchronization.
5. The remote client uses an existing LAN, WAN, or VPN connection to connect to the Siebel Server.
6. The remote client connects to the Siebel Server.
7. The Siebel Server starts the synchronization for the remote client.
8. The Synchronization Manager validates the node name that resides on the remote client with the list of valid node names that exist in the server database. The remote client receives transaction files that Siebel Remote routes to and from the Siebel Server. It also gets file attachments.
9. The remote client gets transaction (.dx) files from the user outbox folder that resides on the Siebel Server, and then stores them in the local inbox folder that resides on the remote client. The remote client also gets any requested, published, or broadcasted file attachments that reside on the Siebel File Server.
10. Siebel Remote inserts the new opportunity in the opportunity table in the local database that resides in the client.
11. The remote client closes the connection with the Siebel Server. The user can use the remote client while it applies synchronized data to the local database.

Scenario for Synchronizing Modified Data with Disconnected Users

This scenario describes how Siebel Remote uploads data that a user has modified from the local database to the server database. It describes how a telesales user works in a call center and meets with a potential new customer who Siebel Remote represents as an existing opportunity in the local database. Another user created this opportunity at an earlier time, and then uploaded it to the Siebel Server during a synchronization. The telesales user then downloaded it during a subsequent synchronization.

The following diagram illustrates a scenario for synchronizing data with an unconnected user.

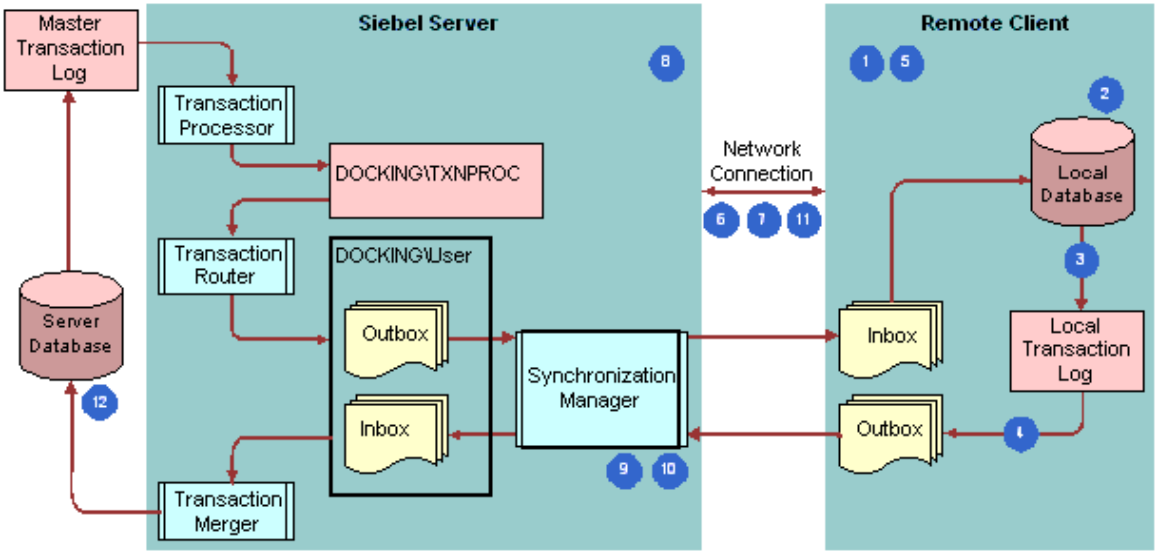

Explanation of Callouts

As shown in this diagram, Siebel Remote does the following work to synchronize data with an unconnected user:

1. The user modifies an existing opportunity that resides in the local database. The user enters these modifications immediately after meeting with the potential customer while working offline.
2. Siebel Remote saves the modified opportunity in the opportunities table that resides in the local database.
3. Siebel Remote saves a transaction record to the local transaction log.

4. Siebel Remote extracts pending transactions from the local transaction log to transaction DX files. It then places these DX files in the outbox folder that resides on the remote client.
5. The user starts a synchronization from the remote client.

   Siebel Remote does Step 6 through Step 12 to record the modifications that occur to the opportunity during this session.
6. The remote client uses an existing LAN, WAN, or VPN connection to connect to the Siebel Server.
7. The remote client connects to the Siebel Server.
8. The Siebel Server starts the synchronization for the user.
9. Synchronization Manager validates the remote client name with the list of valid clients that exist in the server database.
10. Synchronization Manager sends any transaction files that exist in the user outbox folder on the remote client to the user inbox folder that resides on the Siebel Server.
11. Siebel Remote closes the connection with the Siebel Server.
12. Siebel Remote inserts the modified opportunity in the opportunity table on the server database.

How Siebel Remote Resolves Conflicts in Data It Synchronizes

Data divergence is a situation that occurs when the local databases on different remote clients become less synchronized. Data divergence can occur if Siebel Remote does not detect or resolve these complex modifications. Siebel Remote uses conflict detection and resolution logic to prevent data divergence.

To support team selling and field service, Siebel Remote allows different users to access the same data. This situation creates the possibility that two users might make conflicting modifications to the same data when they are disconnected from the Siebel Server. To automatically detect update conflicts, Siebel Remote compares transactions at the field level. It uses rules to resolve conflicts for the following modifications:

- Modifications that update values in an existing row
- Modifications that delete an existing row
- Modifications that add a new row

More complex conflicts involve deleting and adding database rows. For example:

- One user might modify a value in a database row and another user might delete the entire row.
- One user might add a database row to a local database, but the primary key for this row is in use by an existing row in the server database or in the local database of another remote client.

Update Conflict

An *update conflict* is a type of conflict that occurs if two users update the same data. For example, one user modifies the area code for a contact to 415 and another user modifies it to 408. The following table describes values you can use in the System Conflict Resolution field of the Remote System Preferences form to specify how to resolve conflicts. For more information, see *Setting Preferences for Visibility, Logging, Timestamps, and Conflict Resolution*.

Value	Description
Server Wins	The value in the server database overrides the value in the local database. Server Wins is the default value. It is strongly recommended to resolve such conflicts because modifications converge more quickly. The Client Wins rule requires more time for data to converge.
Client Wins	The value in the local database overrides the value in the server database.

Value	Description

If Siebel Remote rejects an update from a remote client, then the user can determine if an update conflict occurred. If the conflict resolution is not correct, then the user can manually reapply the modification to the local database. Siebel Remote sends it again to the Siebel Server during the next synchronization when the remote client sends database modifications to the server. If users have not made any other modifications to the data value since the last synchronization, then the modification does not conflict and it succeeds on the server.

Siebel Remote processes transactions in the order that the user synchronizes them. For the purposes of conflict resolution, any successful database update that a remote client sends to the Siebel Server becomes a server transaction.

Insert Conflict

An *insert conflict* is a type of conflict that occurs if a user adds a database row to a local database or to the server database, and this added or inserted transaction duplicates a new entry that exists in another database that resides elsewhere that the Siebel Server has not yet processed. If the user primary key of a new row matches the user primary key of an existing row, then Siebel Remote determines that an insert or duplicate conflict exists.

Siebel Remote cannot determine if the transaction is a true duplicate or simply an erroneous use of the same identifier for two different data entities. Siebel Remote cannot ignore the duplicate transaction. Instead, it adds the new row and sets the CONFLICT_ID column to the ROW_ID of the record. This configuration indicates that the row is a duplicate and makes sure the value for the _U1 index is unique. To determine if an insert conflict, also known as a duplicate conflict, has occurred, the user can examine the Remote Status view and determine if duplicates exist in a view that contains Siebel CRM data, such as the Accounts view or the Contacts view. For example, the user might modify the user primary key and resend the update. When the user resolves the conflict, Siebel Remote captures the local database update so that it can resynchronize this update with the Siebel Server during the next synchronization.

The user must monitor and resolve any conflict that the Siebel Server creates. The conflict is visible as duplicate records in a view that contains Siebel CRM data, such as the Accounts view or the Contacts view. To resolve an insert conflict, the user can use the Merge Record feature to merge the duplicate records. This feature is available only after the user chooses more than two records in the applet. To use it, the user chooses the Edit menu, and then the Merge Records menu item.

The user can also modify the user keys of one of the duplicate records to resolve the conflict.

The user must resolve conflicts before you can use EIM to merge records. If the user does not resolve conflicts, then the conflict flag in the interface table columns is not accurate.

The local database treats a null value as a unique value. If the user leaves a key field null for two or more records, then the local database allows duplicates.

Delete Conflict

A *delete conflict* is a type of conflict that occurs if a user deletes a row in the local database, and another user updates this same row in a different database. If Siebel Remote encounters a delete transaction, then it uses the following rule whether or not the transaction is in conflict with another update: *Delete Always Wins*.

If one transaction updates a database row and another transaction deletes this row, then Siebel Remote ignores the update and deletes the row.

The Delete Always Wins rule supersedes the System Conflict Resolution field of the Remote System Preferences form.

If the user synchronizes, and if the Merger Friendly Notification system preference is TRUE, then Siebel Remote displays deleted records in the Session Actions list of the Remote Status view of the User Preferences screen. For more information, see *Process of Configuring System Preferences for the Siebel Server*.

Merge Conflict

A *merge conflict* is a type of conflict that occurs if Siebel Remote merges records separately on the remote client and on the Siebel Server. The following example illustrates this problem:

1. Siebel Remote merges data from account A with data from account B on the remote client.
2. Siebel Remote merges data from account A with data from account B on the Siebel Server.
3. Delete transactions have the highest priority in Siebel Remote. The situation described in Step 1 and Step 2 can cause the following delete transactions:
    - One delete transaction exists from the remote client.
    - One delete transaction exists from the Siebel Server.
4. Siebel Remote deletes data from these accounts.

To avoid this problem, it is recommended that users do not merge data on remote clients.

How Siebel Remote Synchronizes File Attachments

If a user attaches a file to a record in the local database, then Siebel Remote does the following work:

- Stores the metadata for this file in the local database
- Stores the file in the local Siebel File System

If the user synchronizes with the Siebel Server, then Siebel Remote copies the file to the Siebel File System that resides on the Siebel Server. It also copies the metadata to the server database.

If another user accesses the record where the file is attached, then Siebel Remote transfers the metadata for the file to the local database for this user the next time the user synchronizes. Siebel Remote does not transfer the file attachment to the local Siebel File System unless the user requests the file. Some types of file attachments include a Distribution Method setting. For example, a Literature item. If Siebel CRM sets the Distribution Method to Publish, then Siebel Remote automatically transfers the file to the user.

A user can click the attachment link in a Siebel application or choose the Request File check box for the attachment to request a file attachment. Siebel Remote then queues the request for the file. The user must synchronize again so that Siebel Remote can copy the file to the local Siebel File System. The user must click the link again to view the file after the synchronization finishes.

How Siebel Remote Manages the Amount of Data It Synchronizes

The following factors determine the size of the local database:

- **The position and responsibilities that the remote client requires.** For more information, see *How Positions, Organizations, and Responsibilities Affect Access*.

- **The Data Routing Model.** The Data Routing Model that Siebel Remote assigns to the remote client affects the amount of data that it stores in the local database.

The following benefits typically exist with a smaller local database:

- Less time required to extract and synchronize
- Improved application performance

For more information about reducing the size of the local database, you can review this guide for features that prevent Siebel Remote from synchronizing unnecessary data. For example, for information about time filtering, see *Using Time Filters to Prevent Sending Old Data*. For help with reducing the size of the local database, see *Troubleshooting a Merge Problem*.

How Siebel Remote Filters the Data It Synchronizes

Siebel Remote uses routing rules and routing models to filter the data that it synchronizes. For example, the data that a field sales representative requires might be different from the data that a field service representative requires. The sales representative might require detailed information about opportunities while the service representative requires detailed information about service requests. Routing rules provide the logic for the Database Extract and the Transaction Router server components. These rules reflect the data visibility and data access policies that exist in the Siebel application. For more information, see *Controlling the Data That Siebel Remote Routes to Clients*. See also *Configuring Siebel Business Applications* .

Dock Objects

A *dock object* is a logical grouping of tables that include schema structures that Siebel Remote uses to synchronize data between a server database and a local database. A routing rule belongs to a dock object.

The following table describes the types of dock objects that Siebel Remote uses.

Type	Description
Enterprise	Siebel Remote sends all the contents of the dock object to the remote client. An Enterprise dock object provides visibility to all users that exist in the Siebel application. Examples include currency and catalog. For more information, see *About the Siebel Enterprise and the Siebel Enterprise Server*.
Limited	Siebel Remote sends all the contents of the dock object to the remote client only if the instance is visible to the user. This data might or might not be visible to a user. Most user data is of the Limited type. A Limited dock object contains routing rules that determine the records that Siebel Remote routes to the user.
Private	Siebel Remote does not send any content from the dock object to the remote client. It does send data that a user creates on the remote client to the Siebel Server. It does not return updates to the remote client. For more information, see *Controlling the Data That Siebel Remote Routes to Clients*.

Routing Rules

A *routing rule* is an SQL (Structured Query Language) statement that the Transaction Router and the Database Extract server components use to determine the records that Siebel Remote must route to each user. They provide the following benefits:

- Protects data integrity

- Allows the user to view the same data that the user can view when the user connects to the Siebel Server
- Facilitates access control
- Maintains application logic and functionality

A transaction in Siebel CRM is associated with a set of routing rules that might cause Siebel Remote to route the transaction to a user. A Siebel release can include more than a thousand active routing rules. For more information, see *Modifying a Routing Model*.

Routing Models

A *routing model* is a collection of routing rules. It identifies the data that Siebel Remote extracts to the user and the subsequent transactions that it routes to this user. You can associate a user with any routing model. Transaction routing behaves differently for each user depending on the routing model that you associate with the user. One of the following routing models is adequate for most users:

- MOBILE CLIENT - STANDARD
- MOBILE CLIENT - EXTRACT ONLY
- Executive Management

You must carefully apply docking rules to reduce the size of the local database. A smaller local database can reduce synchronization times and transaction application times. Docking visibility rules identify the records that Siebel Remote synchronizes from the server database to each user. For more information, see *Predefined Routing Models for Siebel Remote*.

A routing model also affects the data that Siebel Remote extracts to regional servers and the subsequent transactions that it routes to regional nodes. For more information, see *Comparison Between Siebel Remote and Siebel Replication Manager*.

Displaying Views for Data That Routing Models Route

You can configure Siebel Remote so that a Siebel application displays only the views that display data that the routing model routes. You can use this configuration for a user who is assigned to one of the following predefined routing models:

- Sales Rep Standard
- Sales Mgr Standard
- Field Technician
- Analyst
- Sr. Field Engineer
- Field Engineer

Each user is associated with one routing model. The combination of the routing model and the routing rules determine if Siebel Remote routes a record to a remote client. For more information, see *Predefined Routing Models for Siebel Remote*.

Specialized Routing Models

It might be necessary to use a specialized routing model to help minimize the size of the local database. It is strongly recommended that you get help from Oracle before you deploy Siebel Remote with a specialized routing model. For more information, see *Getting Help from Oracle*.

Selective Retrieval Routing Model

The Selective Retrieval routing model can reduce the amount of data that Siebel Remote synchronizes, reduce synchronization time, and reduce the size of the local database. This routing model is appropriate for the user who uses connected and disconnected versions of a Siebel application. It might not be appropriate for a user who only uses the remote client or who requires access to some features, such as quotes or forecasting because Selective Retrieval limits the functionality of the Siebel application in some areas. Enabling records for synchronization also requires a direct connection to a Siebel Enterprise Server or to a regional server if the regional server contains the records that are enabled for synchronization. For more information, see *Using Selective Retrieval to Route Data*, and *About the Siebel Enterprise and the Siebel Enterprise Server*.

How Selective Retrieval Works

A user can enable or disable records for synchronization at any time. If you assign a user to the Selective Retrieval routing model, and if this user enables a record for synchronization, then Siebel Remote synchronizes this record to the remote client that is associated with the enabling User ID. It also synchronizes any records that are related to the enabled record to maintain data integrity. For example, if the user enables an account record, then Siebel Remote synchronizes the records for the contacts and addresses that are associated with this account.

If the user enables records for synchronization before Siebel Remote extracts the server database for the remote client, then the Transaction Router server component handles fewer items on the subsequent synchronization.

If you assign a user to the Selective Retrieval routing model, and if this user disables a record for synchronization, then Siebel Remote removes this record and any associated records from the local database during the next synchronization.

How Siebel Remote Validates and Authenticates Information

This topic describes the validation and authentication that Siebel Remote uses. It includes the following information:

- *How Siebel Remote Validates Synchronization*
- *How Siebel Remote Uses Security Adapter Authentication*
- *How Siebel Remote Authenticates Passwords*
- *How Siebel Remote Encrypts Fields*

For more information, see *Siebel Security Guide* .

How Siebel Remote Validates Synchronization

This topic describes the data that the Synchronization Manager server component validates when a remote client synchronizes with the Siebel Server. The Synchronization Manager authenticates incoming client requests to make sure that the remote client is valid.

Siebel Remote does not route the data that the Data Validation Manager uses. For help with Data Validation Manager, see *Getting Help from Oracle*.

Validating the Remote Client Name

The Synchronization Manager validates the name of the remote client with the list of valid clients that the server database contains. It validates that the effective end date for the client name is valid or is NULL.

Validating the Siebel Server

The App Server Name field identifies the name of the Siebel Server. It resides in the Mobile Clients view of the Administration - Siebel Remote screen. The DockConnString parameter identifies the local database. This parameter resides in the configuration file of the Siebel application on the remote client. For more information, see *Modifying the Siebel Configuration File for Siebel Remote*.

If the value of the App Server Name field does not equal the value of the DockConnString parameter, then the Synchronization Manager does the following work:

- Reroutes the connection to the Siebel Server that the App Server Name field identifies
- Sets the value of the DockConnString parameter to the value that the App Server Name field contains

Validating the User Credentials

If the Authentication Method parameter of the Synchronization Manager is not set to None, then the Synchronization Manager validates the authentication credentials for synchronization with the remote client. The authentication credentials that Siebel Remote uses depends on when the user attempts to synchronize:

- **User synchronizes before Siebel Remote initializes the local database.** Siebel Remote uses the user ID and password that the user provides during the login.
- **User synchronizes after Siebel Remote initializes the local database.** Siebel Remote uses the user ID and password from the DB Synchronization view of the User Preferences screen on the remote client.

The *authentication method* is a Synchronization Manager parameter that identifies the type of authentication that Siebel Remote uses during synchronization. For more information, see *Parameters of the Synchronization Manager Server Component*.

How Siebel Remote Uses Security Adapter Authentication

An *authentication system* is a data store that holds the information that allows the user to connect to a data source or to a server component. This information typically includes a database account and a Siebel user ID. The authentication system that Siebel Remote uses resides outside of the server database.

Guidelines for Using a Security Adapter

Siebel Remote can use a security adapter to authenticate a synchronization for a remote client. A *security adapter* is a plug-in to the Authentication Manager. To get the Siebel user ID, the security adapter uses credentials from a database account and, optionally, a set of roles from the authentication system. The user enters these credentials or an authentication service provides them. The Synchronization Manager server component accepts requests for synchronization and manages the synchronization. It delivers credentials to the security adapter and receives the server database credentials of the user from the security adapter.

If you configure Siebel Remote to use a security adapter, then consider the following guidelines:

- You can use the following parameters:
  - **Security Adapter Mode.** Specifies the type of authentication that the security adapter uses.

- **Security Adapter Name.** Specifies the name of the security adapter profile, which is the named subsystem.

You can set these parameters for a Siebel Enterprise, a Siebel Server, or for a server component. Any setting that you make at a lower level, such as at the component level, overrides any setting that you make at a higher level, such as at the enterprise level. If you must set these parameters at the component level for use with synchronization, then you set them in the Synchronization Manager server component. For more information, see *About the Siebel Enterprise and the Siebel Enterprise Server*.

- You can use the same folder or different folders for synchronization authentication and for authentication with other data sources or server components.
- You cannot configure Siebel Remote to use Web Single Sign On for synchronization.

For more information, see *How Siebel Remote Validates Synchronization* and *Siebel Security Guide* .

How Siebel Remote Authenticates Passwords

Siebel Remote authenticates the password before it connects to the local database. The remote client only supports database authentication through the security adapter on the remote client.

CAUTION: The remote client does not support authentication from a third party or authentication that is proprietary to your organization.

How Siebel Remote Sets the Local Database Password

You can set the password in the local database in one of the following ways:

- The password that you assign during database initialization for the local database is the same as the password that you assign on the Siebel Server to synchronize with this local database.
- The user can assign a different password for the local database.

Features You Can Use to Manage Remote Passwords

You can use the following features to manage the remote database password:

- **Application Lockout.** You can specify the maximum number of consecutive, unsuccessful login attempts that the user can make. If the user unsuccessfully attempts to log in after exceeding the number of times that you specify, then Siebel Remote locks this user out of the Siebel application on the remote client for a time period that you can also specify. The user cannot synchronize the local database with the server database during this time period.
- **Password Expiration.** You can configure a password for a remote database to expire automatically after a set interval. If you use this feature, then Siebel Remote examines the age of each remote database password when the user starts the remote client and when stand-alone synchronization starts. If the password expires, then Siebel Remote prompts the user to set a new password before this user can synchronize or log in to the Siebel application on the remote client.
- **Password Syntax Validation.** You can require that a remote client password conform to format guidelines regarding the number and combination of alphabetic characters, numerals, or special characters that this password must contain. Format validation also examines any new password that the user enters to make sure that it does not duplicate any old passwords that this user used. You can specify the number of old passwords that Siebel Remote examines.

- **User Password Reset.** You can use an administrator account to log in to the Siebel application on the remote client to reset a user password. You reset the user password so that it expires immediately. Siebel Remote then prompts the user to modify the password during the next login.

For more information about:

- Application lockout, password expiration, and password format validation, see *Process of Configuring System Preferences for the Siebel Server*.
- Resetting a password, see *Resetting the Password of a Remote Client*.

How Siebel Remote Encrypts Fields

Siebel Remote provides the following functionality for field encryption. For more information, see *Process of Configuring Encryption and Authentication for the Remote Client* and *Siebel Security Guide* :

- If you extract a local database for a remote client, then the extract process detects encrypted fields and stores the unencrypted contents in a compressed binary DAT file. Siebel Remote uses the clear text value of the field to determine the hashed value of each encrypted field. This extract process does not modify the hashed value.
- If the Transaction Router server component prepares modified data for a user, then it detects encrypted fields and stores the unencrypted contents in the compressed binary DX file. Siebel Remote uses the clear text value of the field to determine the hashed value of each encrypted field. The preparation of the DX file does not modify the hashed value. Some utilities can read data from a DX file. It is recommended that you prevent unnecessary user access to the following folders where DX files might exist:
  - `Txnproc` folder
  - `Inbox` folder
  - `Outbox` folder
- If Siebel Remote synchronizes the server database with a local database, then data that it encrypts at the field level in the server database is decrypted in the local database.
- If your Siebel implementation includes regional nodes, then it must meet the following requirements:
  - The regional nodes must use the same encryption as the Siebel Enterprise Server.
  - The keyfile.bin file on the regional server must be identical to the corresponding file on the Siebel Server of the headquarters node.

    Data that passes between the server database and the local database for a regional node remains encrypted. For more information, see *Overview of Siebel Replication Manager*.
- You can use the DockConnString parameter in the configuration file to specify how to encrypt the network traffic that occurs during a synchronization.

Other Considerations for Design and Development

This topic describes some of the other items that you can consider that this book does not describe elsewhere.

Modifying the S_DOCK_TXN_LOG Table

The Transaction Processor and the Transaction Router server components run on the Siebel Server and route transactions from the master transaction log to the outbox folder on the remote client. The Transaction Processor removes rows from the log after Siebel Remote writes transactions from the S_DOCK_TXN_LOG table to DX files in the `docking\txnproc` folder.

> **CAUTION:** You must not directly modify the contents or structure of the master transaction log under any circumstances.

In a Microsoft SQL Server or DB2 environment, truncation of the S_DOCK_TXN_LOG table in a server database causes Siebel Remote to reset the txn_id values that it assigns to new transactions. Siebel Remote does not reset the corresponding txn_id values in the S_DOCK_STATUS table. In this situation, new transactions that Siebel Remote inserts in the S_DOCK_TXN_LOG table contain a txn_id mismatch when compared to the values that the S_DOCK_STATUS table contain. The Transaction Processor does not process these transactions. It removes them from the S_DOCK_TXN_LOG table.

If Siebel Remote truncates the S_DOCK_TXN_LOG table, then you must reextract all remote clients and delete all existing transactions and local databases before you reinitialize these clients. The reextract process resets the txn_id values in the S_DOCK_STATUS table so that the values correspond with the txn_id values that exist in the S_DOCK_TXN_LOG table. Deleting transactions and local databases is necessary to prevent mismatch errors between new S_DOC_STATUS txn_id values and older txn_id values that exist in the local databases.

Modifying Siebel Tables Directly Through SQL

Siebel CRM does not support modifying a Siebel table directly through SQL. Siebel CRM does not record SQL modifications in the Master Transaction Log (S_DOCK_TXN_LOG) for SQL modifications that run outside of the Siebel application. Siebel Remote does not route them to the remote client.

Using Oracle Real Application Clusters with Siebel Remote

You can obtain high-availability for Oracle database servers by configuring them in an Oracle Real Application Clusters (RAC).

Platform, database, and other certifications for Siebel are found on My Oracle Support. For help searching for certifications, see *How to Check the Certification Matrix in the New My Oracle Support Site* (KB871388).

This table shows the Oracle 9i, 10g, and 11g RAC certification releases:

Siebel Release	Certified Oracle Version	Siebel Remote Enabled	Siebel Remote Disabled
7.5.3.9 or later	Oracle 9.2.0.x (where x =>4)	Active/Passive	Active/Active or Active/Passive
7.7.2 or later	Oracle 9.2.0.x (where x =>4)	Active/Passive	Active/Active or Active/Passive
7.7.2.5 or later	11.1.0.x (where x =>6)	Active/Passive or (Active/Active for 10g/11g only)	Active/Active or Active/Passive

Siebel Release	Certified Oracle Version	Siebel Remote Enabled	Siebel Remote Disabled
	10.1.0.x (where x =>4) including 10gR2 Oracle 9.2.0.x (where x =>4)		
7.8.2 or later	Oracle 11.2.0.1.0 R2 or above Oracle 11.1.0.x (where x >=6) Oracle 10.1.0.x (where x =>4) Oracle 9.2.0.x (where x =>4)	Active/Passive or (Active/Active for 10g/11g only)	Active/Active or Active/Passive
8.0 or later	Oracle R2 11.2.0.1.0 or above Oracle 11.1.0.x (where x>=6) Oracle 10.1.0.4 (where x>=4), including R2	Active/Active orActive/Passive	Active/Active orActive/Passive
8.1 or later	Oracle R2 11.2.0.1.0 or above (Until January 15 2015 with SPS) Oracle 11.1.0.x (where x>=6) Oracle 10.1.0.2	Active/Active orActive/Passive	Active/Active orActive/Passive

Note: Siebel Remote doesn't support the usage of Active Oracle Real Application Clusters (Oracle RAC) because Oracle RAC requires the sequence cache to be disabled. Disabling the sequence cache causes Oracle RAC to not scale properly.

Roadmap for Implementing Siebel Remote

To implement Siebel Remote, you do the following:

1. *Process of Configuring the Siebel Server*
2. *Process of Configuring the Remote Client*
3. *Process of Extracting the Server Database*
4. *Initializing the Local Database*
5. *Synchronizing the Remote Client*
6. *Process of Administering Siebel Remote*
7. *Process of Implementing Siebel Replication Manager*
8. *Process of Administering Siebel Replication Manager*

4 Configuring the Siebel Server

Configuring the Siebel Server

This chapter describes how to configure the Siebel Server for use with Siebel Remote. It includes the following topics:

- *Process of Configuring the Siebel Server*
- *Configuring Server Properties and Environment Variables*
- *Process of Configuring System Preferences for the Siebel Server*
- *Configuring Server Components for Synchronization and Transactions*
- *Running the Generate New Database Server Component*
- *Options for Configuring the Siebel Server*

Process of Configuring the Siebel Server

This process is a step in *Roadmap for Implementing Siebel Remote*.

To configure the Siebel Server, you do the following:

1. *Configuring Server Properties and Environment Variables*
2. *Process of Configuring System Preferences for the Siebel Server*
3. *Configuring Server Components for Synchronization and Transactions*
4. *Running the Generate New Database Server Component*

Configuring Server Properties and Environment Variables

This topic describes how to configure server properties and environment variables. It includes the following information:

- *Configuring Virtual Memory for the Siebel Server*
- *Configuring Server Environment Variables for IBM DB2 for z/OS*

You can do these tasks in any order.

Configuring Virtual Memory for the Siebel Server

This task is a step in *Process of Configuring the Siebel Server*.

The size that you set on the Siebel Server for virtual memory for Windows, or that you set for the swap space for UNIX, affects performance. For best results, it is recommended that you set this size to 1.5 times the size of the physical memory (RAM) of the Siebel Server. You can use typical operating system configurations to accomplish this.

To configure virtual memory for a Siebel Server

- For a Windows server, from the desktop, right-click the My Computer icon, and then choose Properties.
  a. In the System Properties dialog box, choose the Advanced tab, and then click Settings.
  b. In the Performance Options dialog box, click the Advanced tab, and then click Change in the Virtual memory section.
  c. In the Virtual Memory dialog box, choose Custom Size, and then enter a value that is twice the size of the physical memory.
  d. Click Set, and then click OK.
- For a UNIX server, you can use the following typical command to set swap space size: `swap`
  For more information about the `swap` command, see the documentation for the server operating system.

Configuring Server Environment Variables for IBM DB2 for z/OS

If your Siebel Server runs on IBM DB2 for z/OS, then you must set the environment variable that this topic describes. For more information, see the information about configuring environment variables in *Siebel System Administration Guide* , *Siebel Installation Guide* , and *Implementing Siebel Business Applications on DB2 for z/OS* .

To configure server environment variables for IBM DB2 for z/OS

1. If you use a Windows server, then do the following:
   a. On the desktop of the Siebel Server, right-click My Computer.
   b. Choose Properties, and then click the Advanced tab.
   c. Click Environment Variables.
   d. In the System variables section, click New.
   e. In the New System Variable dialog box, add a new system variable using values from the following table.

Variable Name	Variable Value
SIEBEL_REMOVE_COMPENSATION_EMPTY_STRING_MATCHING	t

2. If you use a UNIX server, and a Bourne shell or a Korn shell, then enter the following commands at the shell prompt:

   ```
   SIEBEL_REMOVE_COMPENSATION_EMPTY_STRING_MATCHING=t
   export SIEBEL_REMOVE_COMPENSATION_EMPTY_STRING_MATCHING
   ```

   As an alternative, you can enter the following command:

   ```
   export SIEBEL_REMOVE_COMPENSATION_EMPTY_STRING_MATCHING=t
   ```

3. If you use a UNIX server, and a C shell, then enter the following command at the shell prompt:

   ```
   setenv SIEBEL_REMOVE_COMPENSATION_EMPTY_STRING_MATCHING t
   ```

4. Restart the Siebel Server.

Process of Configuring System Preferences for the Siebel Server

This task is a step in *Process of Configuring the Siebel Server*.

To configure system preferences for the Siebel Server, you do the following:

1. *Process of Completing the Remote System Preferences Form*
2. *Configuring System Preferences for Transaction Logging*
3. *Configuring System Preferences for Timestamps*
4. *Configuring System Preferences for Resolving Conflicts*

Extracting the Server Database After You Modify System Preferences

A number of system preferences affect the way Siebel Remote manages the modifications that it makes to the server database. You can use the Remote System Preferences view to set the system preferences for Siebel CRM during the initial implementation.

> **CAUTION:** If you modify a system preference after you extract the server database, then you must reextract the server database for all remote clients. For more information, see *Requirements for Extracting the Server Database*.

You can examine the Dock Object Visibility Rules under the SystemPref Dock Object in Siebel Tools to identify the modifications that Siebel Remote routes to clients. For more information, see *Transaction Router Server Component* and *Configuring Siebel Business Applications* .

Process of Completing the Remote System Preferences Form

This task is a step in *Process of Configuring System Preferences for the Siebel Server*.

To complete the Remote System Preferences form, you do the following:

1. *Setting Password and Lockout Preferences*
2. *Setting Preferences for Visibility, Logging, Timestamps, and Conflict Resolution*
3. *Setting Preferences for Update Notifications, Visibility Rules, and Routing Rules*

Setting Password and Lockout Preferences

This task is a step in *Process of Completing the Remote System Preferences Form*.

You set system preferences on the Remote System Preferences form. You begin by setting password and lockout preferences.

To set password and lockout preferences

1. Navigate to the Administration - Siebel Remote screen, and then the Remote System Preferences view.

2. Optional. Enable the user password to expire:

    a. Make sure the Enable Mobile Password Expiration check box contains a check mark.
    b. In the Expiration Period field, specify the number of days that each user can continue to use the same password.

       The Expiration Period applies only if the Enable Mobile Password Expiration check box contains a check mark.
    c. In the Warning Period field, specify the number of days to display a warning to the user before the user password expires.

       The user receives a warning before the password expires. The value you enter in the Warning Period field determines the lead time between the warning and the expiration. If the user modifies a password, then the expiration period starts again. The warning period applies only if the Enable Mobile Password Expiration check box contains a check mark.

    To allow the user to use the password indefinitely, do not place a check mark in the Enable Mobile Password Expiration check box.
3. Optional. Configure the Siebel Server to validate the password format:

    a. Make sure the Enable Mobile Password Syntax Check check box contains a check mark.
    b. In the Minimum Number of Characters field, specify the minimum number of characters that the password must contain for each user account that resides on the remote client.

       The Minimum Number of Characters field applies only if the Enable Mobile Password Syntax Check check box contains a check mark.
    c. In the Password Content field, specify the type of characters that the password must include. Use a value from the following table.

Value	Description
Alphanumeric	The password must contain at least one alphabetic character and one numeric character.
Alphanumeric Special Character	The password must contain at least one alphabetic character, one numeric character, and one valid special character. The Description column for the Special Characters value in this table lists these characters.
None	Siebel CRM does not require that this password include any character types.
Special Characters	The password must contain at least one special character. For more information, see *Setting Password and Lockout Preferences*.

    The Password Content field applies only if the Enable Mobile Password Syntax Check check box contains a check mark.

4. Optional. Set a limit for login attempts.
    a. Make sure the Enable Mobile Web Client Lockout check box contains a check mark.
    b. In the Failed Login Attempts field, specify the number of consecutive unsuccessful user login attempts that Siebel CRM counts.

       If the count reaches the value you specify, then the remote client prevents the user from logging in for the number of days that you specify in the Lockout Period field. The Failed Login Attempts field applies only if the Enable Mobile Web Client Lockout check box contains a check mark.
    c. In the Lockout Period field, specify the number of days that the user cannot log in after the user exceeds the value that you specify in the Failed Login Attempts field.

       The Lockout Period field applies only if the Enable Mobile Web Client Lockout check box contains a check mark.

List of Special Characters

The following items are special characters relevant to the Password Content field:

- * (asterisk)
- @ (at sign)
- ^ (caret)
- : (colon)
- , (comma)
- - (dash)
- $ (dollar sign)
- = (equal sign)
- ! (exclamation point)
- > (greater than symbol)
- ((left parenthesis)
- < (less than symbol)
- # (number sign)
- % (percent sign)
- . (period)
- + (plus sign)
-) (right parenthesis)
- ? (question mark)
- _ (underscore)

Setting Preferences for Visibility, Logging, Timestamps, and Conflict Resolution

This task is a step in *Process of Completing the Remote System Preferences Form*.

To set preferences for visibility, logging, timestamps, and conflict resolution

1. Navigate to the Administration - Siebel Remote screen, and then the Remote System Preferences view.
2. Make sure the Enable Transaction Logging field is set correctly to enable transaction logging.

To use Siebel Remote, you must enable transaction logging. For more information, see *Configuring System Preferences for Transaction Logging*.

3. In the Remote System Preferences form, place a check mark next to the Optimized Visibility Check check box.

   For more information, see *Configuring System Preferences for Transaction Logging*.
4. In the Docking Timestamp Source field, specify the source for the timestamp.

   For more information, see *Configuring System Preferences for Timestamps*.
5. In the System Conflict Resolution field, specify how Siebel Remote resolves conflicting database updates. Use a value from the table in *Dock Objects*.

   > **CAUTION:** For important caution information about setting system conflict resolution, see *Requirements for Extracting the Server Database*.

   For more information, see *Update Conflict*.
6. In the Intersection Table Conflict Resolution field and in the Intersection Table Merge Rule field, specify how to handle a record that is involved in an insert conflict.

   For more information, see *Configuring System Preferences for Resolving Conflicts*.

How Optimized Visibility Can Improve Performance

If the Optimized Visibility Check check box contains a check mark, then the Transaction Router server component uses a predefined algorithm to examine visibility. This algorithm uses information that an individual transaction carries to reduce the number of visibility rules that Siebel Remote examines. The algorithm reduces the number of database queries that the Transaction Router requires which improves performance. It is recommended that you use this algorithm in most situations.

Setting Preferences for Update Notifications, Visibility Rules, and Routing Rules

This task is a step in *Process of Completing the Remote System Preferences Form*.

To set preferences for update notifications, visibility rules, and routing rules

1. Navigate to the Administration - Siebel Remote screen, and then the Remote System Preferences view.
2. In the Merger Friendly Notification field of the Remote System Preferences form, specify how Siebel Remote writes information about database updates to the Siebel Remote Status view on the remote client. Use a value from the following table.

Value	Description
Conflicts	Siebel Remote writes information about database updates that caused conflicts.
FALSE	Siebel Remote does not write information about database updates.
TRUE	Siebel Remote writes information about database updates.

3. In the Merger Transactions per Commit field, specify how many database transactions the Transaction Merger server component processes before it sends a database commit:

- You can set a low value, such as 1, to reduce how often the user encounters a locked database row, and to reduce the risk of deadlock.
- You can set a high value, such as 10, to minimize processing overhead.

For default values and recommended settings for various databases, see *Values for System Preferences*.

4. Specify how to handle visibility and routing rules:

   a. In the Visibility Rules per Statement field, specify the number of visibility or routing rules that the Transaction Router server component for each SQL statement examines.
   b. In the Visibility Rules per Statement 1 field, specify the number of visibility or routing rules according to the following items:

      - Examine each SQL statement that the Database Extract server component processes.
      - Examine only the first SQL statement that includes header information.
      - In the Visibility Rules per Statement N field, specify the number of visibility or routing rules that Siebel Remote examines for each SQL statement that the Database Extract server component processes for other SQL statements.

   Do not modify these values without assistance. For help with visibility and routing rules, see *Getting Help from Oracle*.

   For more information, see *Controlling the Data That Siebel Remote Routes to Clients* and *Values for System Preferences*.

Configuring System Preferences for Transaction Logging

This task is a step in *Process of Configuring System Preferences for the Siebel Server*. The Enable Transaction Logging field allows you to enable or disable transaction logging.

> **CAUTION:** If Siebel Remote does not rebuild the dobjinst.dbf visibility database file when Transaction Logging is enabled, then remote clients might experience data discrepancy or visibility problems.

For more information, see *Using Transaction Logging with EIM or Assignment Manager*.

To configure system preferences for transaction logging

1. Navigate to the Administration - Siebel Remote screen, and then the Remote System Preferences view.
2. In the Remote System Preferences form, make sure the Enable Transaction Logging check box contains a check mark.
3. Restart the Transaction Processor.
4. For each active remote client, reextract and reinitialize the local database for that client to make sure that it contains data this is current.

   An *active remote client* is any client that contains no set End Date. This step is necessary because Siebel Remote does not route any transaction that is not logged to the remote client that otherwise receives the transaction. This situation is true even if you choose Enable Transaction Logging again.

Disabling Transaction Logging

You can disable transaction logging.

CAUTION: Disabling Transaction Logging prevents Siebel Remote from working.

To disable transaction logging

1. Navigate to the Administration - Siebel Remote screen, and then the Remote System Preferences view.
2. In the Remote System Preferences form, make sure the Enable Transaction Logging check box does not contain a check mark.
3. Restart the Siebel Server.

Transaction Logging and Database Extract

To log modifications to the local database, you must enable transaction logging when you do a database extract.

Configuring System Preferences for Timestamps

This task is a step in *Process of Configuring System Preferences for the Siebel Server*.

A row in a table on the server database includes the date that Siebel CRM last modified the row. If a remote client updates a row, then Siebel Remote can stamp the date in one of the following ways:

- **Client transaction time.** The time when Siebel Remote modified the remote client. Using the client timestamp promotes consistency across local and server databases, but it can be misleading if the clock for a remote client is not set correctly, or if this client resides in a different time zone.
- **Server database merge time.** The time when Siebel Remote modified the Siebel Server. Using the server timestamp makes sure that the timestamp is accurate, but it also causes the timestamp for the same row on the remote client to be different from the timestamp that resides on the server.

To configure system preferences for timestamps

- Set the Docking Timestamp Source parameter to client transaction time or to server database merge time.

Setting the Docking Timestamp Source parameter does not affect conflict resolution or the priorities for Siebel Remote. Siebel Remote stores updated timestamps only for informational purposes.

Configuring System Preferences for Resolving Conflicts

This task is a step in *Process of Configuring System Preferences for the Siebel Server*. This topic describes system preferences that you can configure to resolve conflicts.

Setting the Intersection Table Conflict Resolution Field

If a record that is involved in an insert conflict is associated with extension records and child records, then Siebel Remote uses the same conflict resolution process to resolve these records that it uses to resolve the parent record. The

user can navigate to the User Preferences screen, and then the Remote Status view to examine the results of conflict resolution operations that reside in the local database.

CAUTION: For important caution information about setting the Intersection Table Conflict Resolution field, see *Requirements for Extracting the Server Database*.

To set the Intersection Table Conflict Resolution field

- Set the Intersection Table Conflict Resolution field using values from the following table.

Value	Description
First In	Keeps the existing record and the associated extension records and child records. Deletes all values from the record where Siebel Remote attempted an insertion. It also deletes the extension records and child records that are associated with the record where Siebel Remote attempted an insertion.
Last In	Replaces the existing record with the record that Siebel Remote is inserting. Replaces the associated extension records and child records of the existing record with the associated extension records and child records of the record Siebel Remote is inserting.
Merge	(Default value) Combines values from these records and their extension records and child records. The exact behavior that Siebel Remote uses depends on the fields that it populates with non-NULL values and on the value of the Intersection Table Merge Rule system preference. For more information, see *Setting the Intersection Table Merge Rule Field*.

Intersection Table Conflict Resolution

You can determine how Siebel CRM handles insert conflicts on intersection tables in enterprise, regional, and local databases. For more information, see *About the Siebel Enterprise and the Siebel Enterprise Server*.

Setting the Intersection Table Merge Rule Field

The Intersection Table Merge Rule field depends on the following value that you set in the Intersection Table Conflict Resolution field:

- **Merge.** The Intersection Table Merge Rule field determines the field values that survive when Siebel Remote merges two records to resolve an insert conflict on an intersection table.
- **A value other than Merge.** Siebel Remote ignores the Intersection Table Merge Rule field.

CAUTION: For important caution information about setting the Intersection Table Merge Rule field, see *Requirements for Extracting the Server Database*.

For more information about resolving insert conflicts, see *Setting the Intersection Table Conflict Resolution Field*.

To set the Intersection Table Merge Rule field

1. Set the Intersection Table Conflict Resolution field to Merge.
2. Set the Intersection Table Merge Rule field to one of the following values:
    - **First In.** (Default value) Siebel Remote applies the following rules to fields in parent records, child records, and associated extension records:

- Siebel Remote replaces existing NULL values with new, non-NULL values
- Siebel Remote preserves existing, non-NULL values

- **Last In.** Siebel Remote applies the following rules to fields in parent records, child records, and associated extension records:

  - Siebel Remote replaces existing NULL values and non-NULL values with new, non-NULL values.
  - If the corresponding new value is NULL, then Siebel Remote preserves existing, non-NULL values.

Configuring Server Components for Synchronization and Transactions

This task is a step in *Process of Configuring the Siebel Server*.

To configure server components for synchronization and transactions

1. Make sure the following field of the Components list is in an Online state for each of the server components that Siebel Remote requires:

   State (Icon)

   For a basic implementation, all the components that are listed in the table in *Server Components That Siebel Remote Uses* must be online, except for Parallel Database Extract and Replication Agent. For more information about using the Components list, see *Using the Administrative Interface to Administer Server Components*.
2. Configure start-up parameters for the Synchronization Manager server component.

   a. Configure parameters for encryption.

      For more information, see *Process of Configuring Encryption and Authentication for the Remote Client*.
   b. Configure parameters to manage the cache.

      For more information, see *Using Synchronization Manager to Manage the Cache*.
3. Configure start-up parameters for the Transaction Processor server component.

   For more information, see *Optimizing the Transaction Processor Server Component*.
4. Configure start-up parameters for the Transaction Router server component.

   For more information, see *Optimizing the Transaction Router Server Component*.
5. Configure start-up parameters for the Transaction Merger server component.

   For more information, see *Optimizing the Transaction Merger Server Component*.

For more information, see *Server Component Parameters*.

Running the Generate New Database Server Component

This task is a step in *Process of Configuring the Siebel Server*.

This topic includes the following information:

- *Creating a New Database for Siebel Remote*
- *Distributing Database Templates to Siebel Servers*
- *Using a Character Datatype with an Extension Column*

A database template is a database that contains no user data but does contain the structure that Siebel Remote requires for use with a Siebel application. You run the Generate New Database (alias GenNewDb) server component to create a new database template. If you modify the server database schema, then you must create a new database template. The following are examples of modifying the server database schema:

- You install the Siebel database
- You upgrade to a new version of a Siebel application
- Use Siebel Tools to extend the server database schema, except if you use Oracle's Siebel Anywhere to deliver a database schema upgrade kit. An extension can include extension tables, extension columns, or extension indexes. For more information, see *Using a Character Datatype with an Extension Column*.

For more information, see *Controlling the Data That Siebel Remote Routes to Clients*.

Siebel Remote No Longer Supports Dbinit

Some earlier versions of Siebel Remote supported the creation of a new empty database file through the Dbinit utility that Siebel Remote used with a local database. Siebel Remote no longer supports this utility. You must still create a new database template before you can extract a database. Siebel Remote uses these files to create a new database template. They are not a substitute for a database template.

Creating a New Database for Siebel Remote

This topic describes how to run the Generate New Database server component (alias GenNewDb) to create a new local database template.

> **CAUTION:** If the Siebel Gateway uses LDAP authentication, then, when you run a job for Generate New Database, you must explicitly specify valid database credentials to connect to the Siebel database. Otherwise, the component task fails, with this message: `Unable to connect to Database`. For example, you might run the job by entering a command like this on the srvrmgr command line: `start task for comp gennewdb with username=user_name, password=pwd`

To create a new database for Siebel Remote

1. Log in to the Siebel Server with administrator privileges.

   For more information, see *Logging in to the Siebel Database as an Administrator*.
2. Navigate to the Administration - Server Management screen, and then the Jobs view.
3. In the Jobs list, click New.
4. In the Component/Job field, choose Generate New Database.
5. In the Requested Server field, enter the name of the Siebel Server where the job for Generate New Database runs.

   The Execution Server field displays the name of the Siebel Server that runs the job after the job finishes.
6. In the Job Parameters list, modify the values for parameters, as needed. For more information, see *Parameters of the Generate New Database Server Component*.
7. In the Jobs list, with the Generate New Database job still chosen, click Submit Job.

   Siebel CRM creates a new database file. This step typically requires a few minutes to complete.
8. Optional. Monitor the progress of the job:
   a. Navigate to the Administration - Server Management screen, and then the Components view.
   b. To view status information, choose the Generate New Database component, and then click the Tasks view tab.
9. If necessary, distribute database templates to Siebel Servers:
   a. To set the environment variables, open a DOS window and then run the siebenv.bat file.
   b. To create the destination folders and the server database template files, run the distmpl.bat file.

      For more information, see *Distributing Database Templates to Siebel Servers*.

Distributing Database Templates to Siebel Servers

If your deployment includes multiple Siebel Servers, then you must distribute the server database templates. You can run the distmpl.bat file to distribute the templates to each Siebel Server. This file creates the proper folder on each Siebel Server and it copies the server database template to the folder. As an alternative, you can run the Generate New Database server component on each Siebel Server to create the database template file.

For more information, see *Creating a New Database for Siebel Remote*.

Examples of Running the Distmpl.bat File

This topic includes two examples of running the distmpl.bat file.

In this example, you specify the following computer name:

```
distmpl \\appsrvr1\siebapp
```

where:

- appsrvr1 is the computer name of the Siebel Server
- `siebapp` is a folder that resides on the Siebel Server

In this example, you specify the following drive:

```
distmpl c:\siebapp
```

where:

- c: is a drive that resides on the Siebel Server
- `siebapp` is a folder that resides on the Siebel Server

Using a Character Datatype with an Extension Column

If you create a new extension column in the Siebel schema, and if you define the datatype as Character (CHAR), then Transaction Merger might not work properly if the length is greater than 1. If the length is greater than 1, then you must use VARCHAR as the datatype.

Options for Configuring the Siebel Server

This topic describes configuration options for the Siebel Server. It includes the following information:

- *Using Assignment Manager to Reduce Traffic*
- *Using Time Filters to Prevent Sending Old Data*
- *Disabling Local Access to Views*
- *Optimizing the Transaction Processor Server Component*
- *Optimizing the Transaction Router Server Component*
- *Optimizing the Transaction Merger Server Component*
- *Optimizing Server Components*

Using Assignment Manager to Reduce Traffic

You can configure the Assignment Manager server component to determine the transactions that Siebel Remote sends to a remote client. During typical operations, Assignment Manager frequently updates the timestamps for large numbers of records even if there are no other modifications to many of those records. You can use the LogTxnChgOnly parameter to avoid sending large numbers of transactions to a remote client when the only modification is to the timestamp. For more information, see *Siebel Assignment Manager Administration Guide* .

To use Assignment Manager to reduce traffic

- Set the LogTxnChgOnly parameter of the Assignment Manager server component to TRUE at the component level.

If you set the LogTxnChgOnly parameter to TRUE, then Assignment Manager logs transactions only if you modified an assignment, such as modifying the membership of a team or modifying the primary for a team. This parameter affects only the Assignment Manager transactions. Siebel Remote sends any record modifications made in an other way to remote clients.

Using Time Filters to Prevent Sending Old Data

You can use the Time Filters feature to prevent Siebel Remote from sending some kinds of older data to remote clients during database extraction or synchronization. Reducing the amount of data that Siebel Remote sends can reduce the amount of time that it requires to extract and synchronize with the server database. Time filtering can also improve response time for the remote client.

Siebel Remote deploys time filtering for each dock object. You can choose a cutoff date for a dock object, such as Activity. If the user modifies data before the cutoff date occurs, then Siebel Remote does not include this data in the extraction or synchronization.

The cutoff date for each dock object is a fixed date that Siebel Remote does not dynamically adjust. If you modify the cutoff date, then you must reextract the remote client. If you do not reextract the remote client after you modify the cutoff date, then this client retains unnecessary older data in the local database. Storage of this old data can degrade performance.

For more information, see *Transaction Router Server Component*.

Starting Time Filtering for Dock Objects

This topic describes how to start time filtering for a dock object.

> **CAUTION:** For important caution information setting time filtering, see *Requirements for Extracting the Server Database*.

To start time filtering for dock objects

1. Log in to a remote client that is connected to the Siebel Server.
2. Navigate to the Administration - Siebel Remote screen, and then the Time Filters view.
3. In the Time Filters list, click New to display an empty record.
4. In the Dock Object field, choose the dock object where you must configure time filtering.

   If the remote client does not display the dock object you require, then you can define it. For more information, see *Defining a New Dock Object for Time Filtering*.
5. Specify a date and time in the Cutoff Time field.

   Specifying this date and time limits the data that Siebel Remote extracts and synchronizes for the dock object that you chose in Step 4.
6. To save the time filter, step off the record.
7. Restart the Transaction Router server component.

   You can create a time filter while the Transaction Router is running. The time filter you create affects database extracts that Siebel Remote starts after it saves the time filter. To affect synchronizations, you must restart the Transaction Router server component after you save the time filter.

Stopping Time Filtering for Dock Objects

If you use time filtering but determine that your business requires Siebel Remote to synchronize older data, then you can stop time filtering for a dock object.

To stop time filtering for dock objects

1. Log in to the Siebel Server with administrator privileges.

   For more information, see *Logging in to the Siebel Database as an Administrator*.
2. Navigate to the Administration - Siebel Remote screen, and then the Time Filters view.
3. In the Time Filters list, choose the record that lists the dock object where Siebel Remote must synchronize older data.
4. Click Delete.

   Repeat Step 3 and Step 4 for other dock objects that no longer require time filtering.
5. Restart the Transaction Router server component.

   You can delete a time filter while the Transaction Router is running. The time filter you delete affects database extracts that Siebel Remote starts after it deletes the time filter. To affect synchronizations, you must restart the Transaction Router server component after you delete the time filter. For more information, see *Configuring Server Components for Synchronization and Transactions*.
6. Reextract local databases for remote clients that require access to the older data.

   For more information, see *Extracting and Initializing a Remote Database*.

Defining a New Dock Object for Time Filtering

This topic describes how to make time filtering available for a dock object that is not predefined for time filtering. You can customize the dock objects that you specify with a time filter. Time filtering is predefined on the following dock objects:

- Activity
- Expense
- Expense Report
- Invoice
- Opportunity
- Price List
- Project
- Project Item
- Quote
- Service Request

You can define more dock objects for time filtering. For many Siebel implementations most of the benefits that time filtering provides comes from using predefined dock objects.

> **Note:** Do not use time filtering for dock objects that are based on the Party data object, which has different characteristics than other data objects. Using time filtering does not produce the desired result for such dock objects.

To define a new dock object for time filtering

1. If necessary, expose the Dock Object object type.

   For more information, see the following.

2. In the Object Explorer, choose Dock Object.
3. In the Dock Objects list, examine the list of names in the Name property to locate the dock object where you must use time filtering, and then make a note of the exact spelling of the name.
4. Log in to the Siebel Server with administrator privileges.

   For more information, see *Logging in to the Siebel Database as an Administrator*.
5. Navigate to the Administration - Data screen, and then the List of Values view.

   This example adds a new value to a List of Values (LOV). For more information, see *Siebel Applications Administration Guide* .
6. In the Type field of the List of Values list, enter the following query:

   ```
   *DOCK_OBJ_TIME_FILTER*
   ```
7. Choose a record, click Menu, and then chose the Copy Record menu item.
8. In the Language-Independent Code field of the new record, enter the exact name of the dock object that you identified in Step 3.
9. In the Display Value field of the new record, enter the name to display in the Siebel application when you configure time filtering for this dock object.
10. Examine the copied values in the other fields of the new record, make required modifications, and then save the record.
11. Start time filtering for the dock object.

    For more information, see *Starting Time Filtering for Dock Objects*.

Preparing Siebel Tools to Configure Siebel Remote

This topic describes how to prepare Siebel Tools to configure Siebel Remote.

To prepare Siebel Tools to configure Siebel Remote

1. Log in to Siebel Tools.
2. Choose the View menu, and then the Options menu item.
3. Click the Object Explorer tab.
4. In the Object Explorer Hierarchy window, make sure there is a check mark next to the Dock Object check box.
5. Click OK.

Disabling Local Access to Views

You can disable local access to some views. If you allow the user to use the All views filter when connected to a local database, and if the table that a business object references possess limited visibility, then the remote client attempts to fix foreign key relationships when displaying data, and Siebel Remote sends the modified data to the server database and other remote clients. This behavior corrupts these databases. You must not allow the user to use the All views filter in this situation.

Consider an example that illustrates this behavior. If the remote client cannot locate an account for an opportunity in the local database, then the All Opportunity List view resets the value of the primary account of the opportunity to NULL. Siebel Remote copies the opportunity to the local database because an activity that the user owns references the opportunity. Siebel Remote copies the opportunity so that the remote client can display the opportunity name and the activity in the Activity List view. If the user is not a member of the sales team for the opportunity, then Siebel Remote does not copy the primary account of the opportunity.

If the user accesses the All Opportunity List view to display the opportunity, and if the remote client does not find the primary account of the opportunity in the local database, then Siebel Remote resets the primary account of the opportunity to NULL, and then copies this modification to other databases. In this situation, limited visibility is related to the following types of visibility that are available with Siebel Remote:

- Enterprise
- Limited
- Private

To disable local access to views

1. Log in to an administrative client.
2. Navigate to the Administration - Application screen, and then the Views view.
3. In the Views list, choose a view, such as the All Opportunity List view.
4. In the Responsibilities list, make sure the Local Access check box does not contain a check mark.
5. Repeat Step 2 through Step 4 for each view that Siebel CRM assigns to the user responsibilities.

Optimizing the Transaction Processor Server Component

Only one Transaction Processor can run for each database installation in a Siebel Enterprise that includes more than one Siebel Server. At startup, the Transaction Processor verifies that another Transaction Processor is not running on the same Siebel Server. This configuration makes sure that the Transaction Processor is not kept from running because it cannot find a valid node during synchronization. For example, assume two Siebel Servers run in the same Siebel Enterprise and reference the same database. Siebel Remote extracts a remote client for one of the Siebel Servers during synchronization, and then correctly applies all the updates from the local database to the server database. It does not apply any server updates to the local database and the Siebel application creates an error similar to the following:

```
Transaction Processor determined that this node does not have any mobile clients or
regional servers that need to receive transactions. Please do a DB extract on one
of these nodes before restarting this component.
```

In this situation, Siebel Remote does not apply any server updates to the local database during synchronization. To correct this problem, you can reextract and reinitialize the remote client on the Siebel Server where it failed. To avoid the problem entirely, you must use only one transaction process for each database installation.

For more information, see the following topics:

- *Transaction Processor Server Component*
- *Optimizing Server Components*
- *Parameters of the Transaction Processor Server Component*

Optimizing the Transaction Router Server Component

The Transaction Router server component takes transactions from the `docking\txnproc` folder and constructs DX files. It then sends these DX files to the outbox that corresponds to the user.

CAUTION: Do not run a Transaction Router and Ddlsync at the same time. It can cause Transaction Router to shut down.

For more information, see *Transaction Router Server Component*, and *Parameters of the Transaction Router Server Component*.

Running Multiple Transaction Router Processes

You must run at least one Transaction Router on each Siebel Server. To improve performance, it is recommended that you start multiple Transaction Router processes on the same Siebel Server. This configuration increases the throughput of transactions to the user outbox:

- Each Transaction Router process can simultaneously route transactions from the server database to a different remote client. For example, if you start four Transaction Router processes, then these four processes can simultaneously route transactions to four different remote clients.
- Using multiple Transaction Router processes reduces the total time that Siebel Remote requires to route transactions to remote clients.

You can start as many concurrent Transaction Router processes as the server database and the Siebel Server can support:

- Monitor the server database and Siebel Server to make sure the concurrent Transaction Router processes do not overload the Siebel application.
- Start with two Transaction Router processes, and then increase the number of processes.
- You typically run multiple Transaction Router processes for each server.

For more information, see *Optimizing Server Components*.

Routing Transactions from the Siebel Server

Only one Transaction Router process can route transactions from the Siebel Server to a remote client at any one time:

- The Transaction Router locks the following folder on the remote client to prevent other Transaction Router processes from routing transactions to the same remote client:

  ```
  outbox
  ```

- If another Transaction Router process is already processing a remote client, then other Transaction Router processes skip this remote client.
- The Transaction Router finishes routing transactions to the remote client, and then it releases the lock and searches for another unlocked remote client to process.

Modifying Routing Rules

A Siebel application includes predefined user routing rules. These routing rules include a combination of implicit security rules, according to responsibility, and assignment rules that determines the information the user can access. For help with configuring routing rules for optimal performance with a large number of objects, such as assets, accounts, or activities, see *Getting Help from Oracle*.

Setting the Threshold That Siebel Remote Uses to Route Transactions

You can use the Operation Routing Rate Threshold parameter of the Transaction Router to set the number of transactions that Siebel Remote routes in one second. You can adjust this threshold to avoid receiving the following system alert:

```
Router is experiencing lower performance throughput than expected
```

This alert is an informational alert. It does not indicate that an error occurred.

To set the threshold that Siebel Remote uses to route transactions

1. Locate the record for the Transaction Router server component.

   For more information, see *Disabling Transaction Logging*.
2. Click the Parameters tab and then query the Parameter field for the following parameter:

   ```
   Operation Routing Rate Threshold
   ```
3. In the Value on Restart field, enter a numeric value.

   The default value is 2.8, representing the number of transactions that Siebel Remote routes in one second. You can decrease the value in this field to prevent Siebel Remote from logging excessive messages in the Transaction Router log file. You can also disable notification for the Transaction Router server component.

Optimizing the Transaction Merger Server Component

The Transaction Merger server component gets DX files from the inbox in the docking folder that resides on the Siebel Server, and then applies these files to this server. It also resolves conflicts. You must run at least one Transaction Merger process on each Siebel Server. You can run multiple Transaction Merger processes on the same Siebel Server to improve performance. For more information, see the following topics:

- *Transaction Merger Server Component*
- *Optimizing Server Components*
- *Parameters of the Transaction Merger Server Component*

Optimizing Server Components

The optimal number of Siebel Servers and the number of tasks for the Transaction Processor, Transaction Router, and Transaction Merger depends on the number of users, the number of transactions that Siebel CRM creates, and other aspects of Siebel CRM. For more information, see the following topics:

- For help with hardware planning and sizing, see *Getting Help from Oracle*.
- For information about starting multiple processes, see *Using the Command Line to Start Multiple Tasks for a Server Component*.
- For information about tuning, see *Siebel Performance Tuning Guide* . See also *Siebel Deployment Planning Guide* .

5 Configuring the Remote Client

Configuring the Remote Client

This chapter describes the work you must do to configure the remote client. It includes the following topics:

- *Process of Configuring the Remote Client*
- *Creating a Remote Client*
- *Process of Configuring Encryption and Authentication for the Remote Client*
- *Controlling the Data That Siebel Remote Routes to Clients*
- *Limiting the Views That a Remote Client Displays*

Process of Configuring the Remote Client

This process is a step in *Roadmap for Implementing Siebel Remote*.

You do the following work to configure the remote client:

1. *Configuring the Siebel Remote Hardware, Software, and Network*
2. *Modifying the Siebel Configuration File for Siebel Remote*
3. *Creating a Remote Client*
4. *Process of Configuring Encryption and Authentication for the Remote Client*
5. *Controlling the Data That Siebel Remote Routes to Clients*
6. *Limiting the Views That a Remote Client Displays*

Configuring the Siebel Remote Hardware, Software, and Network

This task is a step in *Process of Configuring the Remote Client*.

This topic describes how to install the hardware and software, and then establish network connectivity.

To configure the hardware, software, and network for Siebel Remote

1. Install and configure the hardware and software for a Siebel application.

   This step might include configuring users. Do not modify the ODBC code page settings from multiple byte to single byte. For more information, see the *Siebel Installation Guide* .
2. Establish network connectivity.

   Install the hardware and software on the remote client that this client requires to exchange files with the Siebel Server. This step might include choosing communication settings and installing networking cards or software. For more information, see the *Siebel Installation Guide* .

Note: Platform, database, and other certifications for Siebel are found on My Oracle Support. For help searching for certifications, see *How to Check the Certification Matrix in the New My Oracle Support Site* (KB871388).

Modifying the Siebel Configuration File for Siebel Remote

This task is a step in *Process of Configuring the Remote Client*.

The remote client reads configuration parameters in the Siebel configuration file to determine the location of the Siebel Server folders, the Siebel File Server folders, and the server database installation. The siebel.cfg file for Siebel Sales is an example of a configuration file.

You must set the values for the configuration parameters before you configure Siebel Remote. If you install a Siebel application, then the Siebel installation program creates a siebel.cfg file in the `bin` folder on the remote client. This file includes default values for each configuration parameter.

Siebel Remote reads the configuration parameters from the configuration file that the Windows shortcut specifies for the remote client or for the synchronizer, depending on whether the user starts synchronization while using the remote client or uses the stand-alone synchronizer. The Installer sets up the shortcut to use siebel.cfg as the configuration file, by default. You can modify this setting.

Siebel Remote reads the configuration information from the configuration file when it does a synchronization. For example, if you use Siebel Call Center, then it reads configuration information from the uagent.cfg file. The user can choose the File menu, Database, and then the Synchronize menu item to start a synchronization.

To modify the Siebel configuration file for Siebel Remote

1. Locate, and then open the configuration file in a text editor.
   For more information, see *Locating the Siebel Application Configuration File*.
2. Locate the [Siebel] section, and then do the following:
   a. Set the ClientRootDir parameter.
      The ClientRootDir parameter is the name of the installation folder that resides on the remote client.
   b. Set the DockRepositoryName parameter.
      The DockRepositoryName parameter is the name of the Siebel runtime repository that you are currently using, such as Siebel Repository. This parameter must contain the same value as the Siebel runtime repository on the Siebel Server.
   c. If the user connects to a VPN and the connection is lost, then Siebel Remote might display the following error message:

      ```
      Page cannot be displayed.
      ```

      If you encounter this, and restarting the Mobile Web Client does not reconnect, then set EnableFQDN to False. Setting EnableFQDN to False might affect other functionality, such as the behavior of a pop-up blocker. For more information, see the *Siebel Installation Guide* .
3. Locate the [LOCAL_SE] section, and then do the following work:
   a. Set the DockConnString parameter.
      The DockConnString parameter is the logical network address of the Siebel Server where Siebel Remote connects to synchronize. For more information, see *Formatting the DockConnString Parameter* and *Using VPN When Synchronizing Through the Internet*.
   b. Set the TableOwner parameter.

The TableOwner parameter is the name of the account on the local database where the Siebel schema resides. The default value is SIEBEL.

c. Set the DockTxnsPerCommit parameter.

For more information, see *Recommended Configurations for Setting the Number of Transactions That Siebel Remote Applies Before a Commit*.

4. Optional. Modify the configuration file to use a different data source.

If your organization requires data and applications that are stored on separate devices, then you can use a data source that is different from the one that you specify in the [LOCAL_SE] section of the configuration file.

> **CAUTION:** Make sure you modify the description of the existing local data source in the configuration file. Do not add more local data sources to the configuration file because Siebel Remote does not support these additional local data sources.

5. Save your modifications, and then close the configuration file.
6. Implement your modifications across the Siebel Enterprise.

You must apply any modification that you make to the Siebel runtime repository to the Siebel Servers that serve the modified application to the Web clients. For more information, see *Upgrading a Regional Node*.

Recommended Configurations for Setting the Number of Transactions That Siebel Remote Applies Before a Commit

The following table describes recommended configurations for setting the number of transactions that Siebel Remote applies before a commit. The DockTxnsPerCommit parameter sets the number of transactions that Siebel Remote applies to the local database before it does a commit. You must set this configuration parameter to a value that satisfies the requirements at your site. The default value is 500.

Situation	Recommended Configuration
The user uses the Synchronize Database menu item of the File menu in a Siebel application.	Set the DockTxnsPerCommit parameter to a high value. A merged transaction does not lock out another user. This configuration improves performance.
The user uses a stand-alone synchronizer.	Set the DockTxnsPerCommit parameter to a high value only if the program is the only active user on the server database. For more information, see *Using the Stand-Alone Synchronizer*.
The Siebel application applies transactions while the user accesses the server database through this Siebel application.	Set the DockTxnsPerCommit parameter to a low value to prevent locking out other users while Siebel Remote merges transactions.

Verifying Database Connectivity on UNIX

You can use odbcsql to verify database connectivity on a UNIX operating system.

To verify database connectivity on UNIX

1. Set the SIEBEL_UNIXUNICODE_DB environment variable to ORACLE or DB2.
2. Test the connection using odbsql.

For more information, see *Siebel Installation Guide* .

Formatting the DockConnString Parameter

Siebel Remote uses the DockConnString parameter, located in the [LOCAL_SE] section of the configuration file, to synchronize to the Siebel Server. This parameter contains the name of the computer where you install the Siebel Server software and where you extract the remote client. Make sure you set the DockConnString parameter in the configuration file before you initialize the remote client. You must use the following format when you set the DockConnString parameter:

```
siebel_server_name::sync_port_number:TLS
```

where:

- siebel_server_name is the logical network address of the Siebel Server that the remote client uses to connect and synchronize.
- sync_port_number is the TLS or TCP/IP port number that Siebel Remote dedicates to the Synchronization Manager. If you do not specify any value, then the default value is 40400. For more information, see the following.
- TLS (optional). As of Siebel CRM 19.6 Update, Siebel Remote supports TLS for synchronization, where the necessary configuration has been done on the server and the clients. If you do not specify TLS, then no encryption is used. For more information, see *Configuring TLS Encryption for Siebel Remote*.

The following examples are valid values for the DockConnString parameter:

```
SIEBAPP1::9000:TLS
SIEBAPP1::9000
SIEBAPP1:TLS
SIEBAPP1
```

Note: All elements of the DockConnString parameter are optional except the Siebel Server name. You must use two colons between the Siebel Server name element and the port number element.

Setting the Synchronization Manager Port Number

You can modify the default value of the port number that you specify in the DockConnString parameter. You can also specify this port number as a command line option when you start the Siebel Server.

To modify the Synchronization Manager port number

1. Make sure advanced parameters are visible.

   For more information, see *Making Advanced Server Parameters Visible*.
2. To use the administrative interface to modify the port number, do the following work:
   a. Locate the record for the Synchronization Manager server component.

      For more information, see *Locating the Record for a Server Component*.
   b. Click the Parameters tab, click Advanced, and then query the Parameter field for Static Port Number.
   c. Specify a value in the Value on Restart field.
   d. Restart the Siebel Server.
3. To use the Server Manager command line interface to modify the port, do the following work:
   a. On the Siebel Server, navigate to the following folder:

```
SIEBEL_ROOT\bin
```

b. Open the Server Manager command line.

   For more information, see *Opening the Command Line Interface for Server Manager*.

c. Enter the following command:

```
srvrmgr> change param portnumber=port_number for comp synchmgr
```

d. To display the current port number value, you can enter the following command:

```
srvrmgr> list advanced param portnumber for comp synchmgr
```

4. Update the remote client configuration file so that it matches the setting you specified in this procedure.

   For more information, see *Modifying the Siebel Configuration File for Siebel Remote*.

Using VPN When Synchronizing Through the Internet

It is recommended that every synchronization occur within the corporate firewall. If your deployment must support synchronization to the Internet from outside the firewall, then it is recommended that you use a VPN (Virtual Private Network). If there is a firewall on the network between the remote client and the Siebel Server, or between the VPN Server and the Siebel Server, then the port for synchronizing with the Siebel Server must be opened on the firewall, and this port must be a port other than port 80.

If you do not use a VPN connection, then it is possible that your Internet Service Provider (ISP) or another host on the router could block communication on the port that you specify for synchronizing.

Creating a Remote Client

This task is a step in *Process of Configuring the Remote Client*.

You do one of the following to create a remote client:

- *Using an Administrative View to Create a Remote Client*
- *Using EIM to Create Multiple Siebel Remote Clients*

Using an Administrative View to Create a Remote Client

You can use an administrative view to create a remote client.

To use an administrative view to create a remote client

1. Make sure you already configured the user as a user in the Siebel application.

   This user will use the remote client that you create in this topic.

2. Log in to the Siebel Server with administrator privileges.

   For more information, see *Logging in to the Siebel Database as an Administrator*.

3. Make sure the user possesses access to the required views in the user responsibilities.

For more information, see *Views That Siebel Remote Users Require*.

4. Navigate to the Administration - Siebel Remote screen, and then the Mobile Clients view.
5. In the Parent Server form, query the Server Name field to locate the correct server.

   If your deployment does not use Replication Manager, then the correct server is Headquarters (HQ). For more information, see *Overview of Siebel Replication Manager*.

   For more information, see *How Siebel Remote Populates the App Server Name Field*.
6. In the Mobile Clients list, click New.
7. In the Mobile Client field, enter the remote client name.

   It is recommended that you use the User ID of the remote client that you specify in Step 8. You cannot use Unicode characters in the login ID. If the user login ID contains Unicode characters, then the initialization will fail.
8. In the User ID field, click the select icon, and then choose the user ID for the user.

   Siebel Remote uses the user ID to access the local database during initialization and synchronization.
9. In the Routing Model field, click the select icon, and then choose the data routing model that Siebel Remote uses to route data to the user.

   For more information, see *Controlling the Data That Siebel Remote Routes to Clients*.
10. In the Language(s) field, click the select icon, and then choose the preferred language or languages for the user. If the preferred languages are not available, then click New and follow the instructions that the administrative view displays in the dialog boxes.

    For more information, see *User Language Preferences*.
11. In the Runtime Repository Language field, click the select icon, and then choose the preferred language for the Siebel runtime repository.

    > **Note:** Check the language that is required for this remote client and populate this column accordingly before you run the Database Extract server component (DbXtract). If the correct language is not selected, then when the local database is initialized and, after the Siebel Upgrade Wizard completes, the application tries to launch automatically, an incorrect user ID or password error occurs.

12. Complete the remaining fields:

    If the authentication method in the Siebel Server Component Parameters is Siebel, then the Synchronization Manager uses the Sync Password field. You can set the password in this field, and then communicate it to the user. To display this field, it might be necessary for you to use Columns Displayed.
13. If you do not use the Standard routing model, then add the user to the responsibility:

    > **Note:** Responsibilities can be Workspace enabled in your development environment. If they have been Workspace enabled in your development environment and you are working in that environment, then you can only modify them in an editable Workspace. You do not need an editable Workspace to create and edit Responsibilities in your Production environment.

    a. Navigate to the Administration - Application screen, and then the Responsibilities view.
    b. In the Responsibility field, query for the Responsibility that contains the Routing Model suffix.

       The Responsibility that contains the Routing Model suffix references the data routing model that you assigned in Step 9. For more information, see *Limiting the Views That a Remote Client Displays*.
    c. In the Users list, add a new record.
    d. In the Add Users dialog box, choose the user, and then click OK.

Views That Siebel Remote Users Require

The following table describes the views that a Siebel Remote user requires. For more information about configuring employees and providing access to views, see *Siebel Applications Administration Guide* .

View	Description
Mobile User Summary View	Displays the current state of the remote client. The user can use it to get information about when Siebel Remote extracted and initialized the remote client, and to get information about the last synchronization. To display this view, the user navigates to the User Preferences screen, and then the Mobile User Summary view.
Dock Session Log	Displays information about each synchronization, including information about conflicts and other results of each synchronization. To display this view, the user navigates to the User Preferences screen, and then the Remote Status view.
Auto Synchronization View	Allows each user to do the following work: • Configure TrickleSync and synchronization reminders. For more information, see *How Siebel Remote Uses TrickleSync to Manage Synchronization Frequency*. • Configure synchronization authentication credentials. • Set parameters that determine synchronization behavior. The feature known as Auto Synchronization in previous releases is now named TrickleSync. The view for configuring TrickleSync is still named the Auto Synchronization view. To display this view, the user navigates to the User Preferences screen, and then the DB Synchronization view.

How Siebel Remote Populates the App Server Name Field

Siebel Remote does not populate the App Server Name field until you run the Database Extract for the user. When Siebel Remote creates the S_NODE record for the remote client, the App Server Name field is NULL. If you use EIM to create remote clients, then the Mobile Clients list does not display any records that do not contain headquarters (HQ) as the parent server.

Siebel Remote stores the parent server in the following columns of the EIM_NODE table:

- PAR_NAME
- PAR_NODE_TYPE_CD

EIM does not require these columns. Siebel Remote does require them. If you use the Mobile Clients view to enter users, then Siebel Remote populates these columns, by default.

For more information about EIM, see *Using EIM to Create Multiple Siebel Remote Clients*. For more information about headquarters nodes, see *Overview of Siebel Replication Manager*.

Format That Siebel Remote Uses for the Remote Client Name, Database Name, Login ID, and Windows Password

The following table describes important format requirements that you must follow when you define a remote client name, database name, login ID, or password for a Microsoft Windows user account. Each of these items must meet the formatting requirements for Oracle Database SE2 or Microsoft Windows.

Object	Length	Case
Client Name	Can contain more than eight characters.	Uppercase or lowercase.
Database Name	Cannot exceed 30 bytes. The limit is 30 characters in a single byte character set, or 15 characters in a double byte character set.	Uppercase only.
Login ID	Cannot exceed 50 characters.	Uppercase only.
Password	Can contain more than eight characters.	Uppercase or lower case.

CAUTION: The remote client name, database name, login ID, and password must meet the requirements that this topic describes.

Siebel Remote uses the remote client name to create inbox and outbox folders on the Siebel Server. This name must conform to a specific format.

The remote client name, database name, login ID, or Windows password can contain only the following items:

- Roman characters
- Alphanumeric characters
- The underscore (_)

Character Usage

The remote client name, database name, login ID, or Windows password cannot contain any of the following items:

- Any special character listed in *Setting Password and Lockout Preferences*, except for the underscore (_).
- Any of the following special characters:
  - \ (backslash)
  - dash (-), except for the server database name, which can contain a dash
  - " (quotation mark)
  - / (slash)
  - (space)
  - | (vertical bar)

Unicode Usage for the User Login ID

If the user login ID contains Unicode characters, then the initialization fails. You cannot use Unicode in the user login ID.

User Language Preferences

A language preference allows the user to download data in a preferred language for the following dock objects that contain translation tables:

- LOV
- Product

- Literature
- Catalog
- Catalog Category

This configuration helps optimize the size of the local database. Siebel Remote sets the Language field to empty to make sure the user receives data in all the languages for these dock objects, by default. Siebel Remote routes data for each of the other dock objects to the remote client according to the visibility rules.

For more information, see *Transaction Router Server Component*.

Using EIM to Create Multiple Siebel Remote Clients

You can use EIM (Enterprise Integration Manager) to do a batch load if Siebel Remote must load a significant amount of data, such as when it creates a large number of remote clients. If you use EIM to import records to the server database, then Siebel Remote logs transactions in the file system to improve performance. If a remote client possesses read and write access to the records that EIM imports during an EIM session, then it is strongly recommended that you use row by row logging. For more information, see *Siebel Enterprise Integration Manager Administration Guide* .

If your deployment includes Replication Manager, then Siebel CRM supports this EIM functionality only on the Siebel Server of the headquarters node. For more information about headquarters nodes, see *Overview of Siebel Replication Manager*. For more information on how to load data in interface tables, and then populate base tables, see *Siebel Enterprise Integration Manager Administration Guide* .

Using Transaction Logging with EIM or Assignment Manager

If you use EIM or Assignment Manager, and if the Enable Transaction Logging check box contains a check mark, then Siebel Remote logs modifications in the S_DOCK_TXN_LOG table, and then synchronizes them to the remote clients. If a large amount of data exists, then the Transaction Processor and Transaction Router might require a significant amount of time to process the modifications for each remote client. It might take so long that it is faster to reextract the remote client, and then apply the extract remotely.

It is recommended that you turn off transaction logging while EIM runs to avoid a rapid expansion of the S_DOCK_TXN_LOG table. After EIM finishes loading data, you must turn on transaction logging and reextract the remote clients. This configuration also prevents the risk of overloading the Transaction Processor and the Transaction Router.

A larger batch typically improves performance for EIM but can also cause problems for Siebel Remote. If you use EIM and Siebel Remote, then it is recommended that you limit batch sizes to 1000 or fewer records.

For more information, see *Modifying the S_DOCK_TXN_LOG Table*.

To use transaction logging with EIM or Assignment Manager

1. Disable transaction logging.

   For more information, see *Disabling Transaction Logging*
2. Use EIM to load data or use Assignment Manager to assign data.

   Make sure you limit batch sizes for EIM to 1000 or fewer records.
3. Enable transaction logging.

   For more information, see Step 1 in the topic *Configuring System Preferences for Transaction Logging*.

Using Set-Based Logging for EIM

EIM logs transactions differently according to the following value of the LOG TRANSACTIONS TO FILE parameter:

- **TRUE.** EIM logs transactions in the following folder with only one marker logged in the S_DOCK_TXN_LOG table:

  ```
  FileSystem\eim
  ```

- **FALSE.** EIM logs transactions in sets to reduce database contention in the S_DOCK_TXN log. It only records one transaction for each EIM set in the S_DOCK_TXN_LOG table.

Avoiding Transaction Processor Failures That Are Caused by Moving the File System

The Transaction Processor might fail with an error that is similar to the following:

```
Unable to open User Txn Log file for reading or writing in FileSystem\eim\*.dx.
```

The following situation can cause this error:

1. EIM runs with the LOG TRANSACTIONS TO FILE parameter set to the default TRUE to collect EIM transactions in the `FileSystem\eim` folder.
2. You move the file system from the `FileSystem\eim` folder to another folder, such as `NewFileSystem\eim`.
3. You delete the `FileSystem\eim` folder.
4. You start the Transaction Processor.

The master transaction in the S_DOCK_TXN_LOG table indicates that the EIM log exists in the `FileSystem\eim` folder. The Transaction Processor fails when it cannot open the `FileSystem\eim\*.dx` file. For more information, see *Modifying the S_DOCK_TXN_LOG Table*.

To avoid Transaction Processor failures that are caused by moving the file system

1. Before you move the file system, make sure the Transaction Processor finishes processing all transactions that exist in the `FileSystem\eim` folder.
2. If you already moved the file system, then do the following:
   a. Create the `FileSystem\eim` folder.
   b. Copy all DX files from the `NewFileSystem\eim` folder to the `FileSystem\eim` folder.
3. Start the Transaction Processor.

Process of Configuring Encryption and Authentication for the Remote Client

This task is a step in *Process of Configuring the Remote Client*.

You do the following tasks to configure encryption and authentication for the remote client:

1. *Configuring TLS Encryption for Siebel Remote*
2. *Configuring Encryption for the Local Database Password*
3. *Creating Accounts and Passwords*
4. *Setting the Local Database Password*

Configuring TLS Encryption for Siebel Remote

This task is a step in *Process of Configuring Encryption and Authentication for the Remote Client*.

As of Siebel CRM 19.6 Update, Siebel Remote supports Transport Layer Security (TLS) for Synchronization Manager synchronization with remote clients.

To use TLS encryption, SHA-2 certificate files must be deployed on the Siebel Server and the remote clients and TLS encryption must be configured for the Synchronization Manager component and the remote clients. If the parameters do not match each other, then a connection error occurs. For more information about using certificates and key files for TLS authentication, see *Siebel Security Guide* . For information about setting parameters for servers and clients, see *Siebel System Administration Guide* .

To configure TLS encryption on Siebel Server

1. Deploy the certificate files on the Siebel Server. For example, on Microsoft Windows you might deploy the certificate in a directory like `c:\siebelcerts`. Perform this step if you have not already configured TLS for this Siebel Server.
2. In the Siebel application, make sure advanced parameters are visible.

   For more information, see *Making Advanced Server Parameters Visible*.
3. Set the Communication Type (alias CommType) parameter server component to TLS for the Synchronization Manager component.

   - To use the administrative interface, you do the following steps:
     - Locate the record for the Synchronization Manager server component. For more information, see *Locating the Record for a Server Component*.
     - Click the Parameters tab, click Advanced, and then query the Parameter field for Communication Type.
     - Set the Value on Restart field to TLS.
   - Alternatively, you can set this parameter in Server Manager by using a command like the following:

     ```
     srvrmgr> change param CommType=TLS for comp SynchMgr
     ```

   See also *Opening the Command Line Interface for Server Manager*.
4. If the Encryption Type (alias Crypt) parameter is set to RSA (or any other value) for Synchronization Manager, then set it to None.
5. Set the KeyFilePassword, KeyFileName, CertFileName, and CACertFileName parameters at the enterprise level to specify the certificate files you have deployed, using commands like the following. Perform this step if you have not already configured TLS for this Siebel Server.

   ```
   srvrmgr> change ent param KeyFilePassword=pwd
   srvrmgr> change ent param KeyFileName=key_file_name
   srvrmgr> change ent param CertFileName=cert_file_name
   srvrmgr> change ent param CACertFileName=CA_cert_file_name
   ```

   > **Note:** The parameter values must include the full path and file name for each file referenced. For example, for CACertFileName, you might set CA_cert_file_name to a value like `/export/home/sblqa1/certs/cacert.pem`.
6. Stop the Siebel Server system service, and then restart it.

To configure TLS encryption on each remote client

1. Deploy a copy of the same certificate file that you deployed on the server and specified using the CACertFileName parameter.
   You *must* deploy this certificate file in the `SIEBEL_CLIENT_ROOT\siebelcerts`directory, such as `C:\Siebel\Client\siebelcerts`. Create this directory if it does not exist.
2. Create a configuration file named configuration.properties in the directory where you deployed the certificate file. Edit the file in a text editor like Notepad and include an entry like the following to specify the certificate file:

   ```
   [CertificationInfo]
   CACertFileName=SIEBEL_CLIENT_ROOT\siebelcerts\cacert.pem
   ```

   For example, set a value like `C:\Siebel\Client\siebelcerts\cacert.pem`.
3. Edit the application configuration file (such as siebel.cfg or uagent.cfg) in a text editor like Notepad. In the [LOCAL_SE] section, change the value of the DockConnString parameter for the local database. Add *:TLS* at the end of the value. (If necessary, first remove the values RSA or None at the end of the line, including preceding colons.)
   For more information, see *Formatting the DockConnString Parameter* and *Modifying the Siebel Configuration File for Siebel Remote*.

Configuring Encryption for the Local Database Password

This task is a step in *Process of Configuring Encryption and Authentication for the Remote Client*.

To add a layer of security, encryption removes the relationship that exists between the password that Siebel Remote stores in the local database and the unencrypted password that the user enters. You can configure RSA SHA-1 encryption, which is a one-way hashing algorithm. Siebel Remote applies this algorithm to the local database password before it sends this password to the local database for authentication. Siebel Remote uses the security adapter on the remote client to encrypt the local database password. You must configure the Siebel Server and the remote client to encrypt the local database password.

Related Topic

Setting Encryption on the Local Database Password

To configure encryption for the local database password

1. Make sure synchronization is configured for encryption.
   For more information, see *Process of Configuring Encryption and Authentication for the Remote Client*.
2. Make sure the parameters in the configuration file on the remote client contain the values that Siebel Remote requires to encrypt the local database password.
   For more information, see *Configuration File Parameters That Siebel Remote Uses to Encrypt the Local Database Password*.
3. Make sure you set the following parameter correctly when you extract the server database:
   Encrypt client Db password
   For more information, see *Setting Encryption on the Local Database Password*.

Configuration File Parameters That Siebel Remote Uses to Encrypt the Local Database Password

The following table describes the parameters and their values that you must set to encrypt the local database password. Siebel CRM comes predefined with most of these values already set. However, it is strongly recommended that you confirm them. For more information, see *Modifying the Siebel Configuration File for Siebel Remote* and *Setting Encryption on the Local Database Password*.

Section	Parameter and Value	Description
InfraSecMgr	SecAdptName = DBSecAdpt	DBSecAdpt is the default name for the section in the configuration file that defines the security adapter.
	SecAdptMode = DB	DB (database authentication mode) is the only supported authentication mode that Siebel Remote uses for local database authentication.
DBSecAdpt	SecAdptDllName = sscfsadb	Specifies the DLL name for the default security adapter. This is a default setting and applies in Windows and UNIX environments.
	DataSourceName = Local	Specifies to apply this security adapter section to the [LOCAL_SE] data source section in this configuration file.
	DBSecAdpt_PropagateChange = TRUE	TRUE allows the user to modify the local database password.
Local	DSHashUserPwd = TRUE	Set to TRUE to encrypt the local database password in the Local data source. If you configure the Siebel Server to enable local database password encryption, then the Upgrade Wizard makes this setting when it initializes the local database.
	DSHashAlgorithm = RSASHA1	Use RSA SHA-1 encryption. If you configure the Siebel Server to enable local database password encryption, then the Upgrade Wizard makes this setting when it initializes the local database.

Creating Accounts and Passwords

This task is a step in *Process of Configuring Encryption and Authentication for the Remote Client*.

You must create an account for each client to authenticate a remote client when it synchronizes. The authentication method you choose determines the account you must create.

To create accounts and passwords

- Create an account and password according to the type of authentication you use. Use values from the following table.

Authentication	Work You Must Do
AppServer authentication	Create a user account on the Siebel Server for each remote client: • If the Siebel Server runs in a supported Windows environment, then create a Windows user account and password for each remote client on the Siebel Server or on the domain. The user name and password must use file naming conventions that DOS requires. For more information, see *Format That Siebel Remote Uses for the Remote Client Name, Database Name, Login ID, and Windows Password*, and *Format That Siebel Remote Uses for the Remote Client Name, Database Name, Login ID, and Windows Password*. • If the Siebel Server runs in a UNIX environment, then create the user on the Siebel Server that hosts Siebel Remote. For more information, see *Siebel Installation Guide* . For more information, see *How the Change Password Functionality Affects Authentication*.
Database authentication	Create a database account and password for each remote client.
Siebel authentication	Do the following: • Access the Mobile Clients view of the Administration - Siebel Remote screen, and then set the password for each remote client. • Communicate the password to the user so this user can synchronize with the Siebel Server.
SecurityAdapter authentication	Create the accounts and passwords that your third party authentication system requires. For example, it might be necessary for you to create records in an LDAP folder.
No authentication	Do not create accounts or passwords for authentication.

How the Change Password Functionality Affects Authentication

If you use the change password functionality on the remote client while connected to the Siebel Server, then Siebel Remote modifies the server password and stores it in a table that is specific to the server database, and not in a Siebel table. In this situation, the remote client is not synchronized with the local database. The user must continue to use the old user password to access the local database until the next time Siebel Remote reextracts the node.

Summary of Accounts, User IDs, and Passwords That Siebel Remote Uses

The following table summarizes the accounts, user IDs, and passwords that Siebel Remote uses.

Password, User ID, or Account	Description
Local Database Password	Maintains different credentials to access and synchronize the local database. For more information, see *Setting the Local Database Password*.
User ID for the Local Database	The user ID for the local database.
User ID and password on the server database	For more information, see *Parameters of the Synchronization Manager Server Component*.
Password for the DBA account	Configured when you run the Generate New Database server component. For more information, see *Parameters of the Generate New Database Server Component*.

Password, User ID, or Account	Description
Synchronization password	For more information, see *Configuring the Remote Client to Automatically Synchronize*.
Authentication accounts and passwords	For more information, see *Creating Accounts and Passwords*.
User name and password for the Siebel Gateway	For more information, see *Registering a New Password with the Siebel Gateway*.
Table owner password on the regional database	For more information, see *Parameters of the Regional Database Initialization Program*.

Setting the Local Database Password

This task is a step in *Process of Configuring Encryption and Authentication for the Remote Client*.

Using different credentials to access and synchronize the local database provides a layer of security against unauthorized access to the local database and the server database. The user can redefine the password for the local database so that it is different from the synchronization password. For more information, see *About the Siebel Enterprise and the Siebel Enterprise Server*.

To modify the local database password

1. Start the remote client.
2. Log in to the local database.

   For more information, see *Logging in to the Local Database*.
3. Navigate to the User Preferences screen, and then the Profile view.
4. Enter the new password in the Password field and in the Verify Password field.
5. Click Save.

Controlling the Data That Siebel Remote Routes to Clients

This topic describes how to configure dock objects and routing models that allow you to control the data that Siebel Remote routes to clients. It includes the following information:

- *Using Selective Retrieval to Route Data*
- *Using Responsibilities to Route Data*
- *Modifying a Routing Model*

You can use any of these topics to configure dock objects.

CAUTION: For important caution information about modifying the server database schema, see *Requirements for Extracting the Server Database*.

For more information, see *How Siebel Remote Filters the Data It Synchronizes*.

Using Selective Retrieval to Route Data

You can assign a remote client to the Selective Retrieval routing model. You can also assign the user to a responsibility that corresponds to the Selective Retrieval routing model, such as the Selective Retrieval Routing Model responsibility.

For more information about:

- Selective retrieval, see *Selective Retrieval Routing Model*.
- Assigning a routing model when you register a remote client, see *Configuring the Remote Client to Automatically Synchronize*.
- Modifying a routing model, see *Modifying the Routing Model for a Remote Client*.
- Assigning a responsibility, see *Siebel Security Guide* .

Enabling Records for Selective Retrieval While Logged in as a User

This topic describes how to enable a record for selective retrieval while logged in as a user.

To enable records for selective retrieval while logged in as a user

1. Log in to the Siebel application using a direct connection to the Siebel Server.

   Do not log in with a connection to the local database. Use the User ID that is associated with the user that you must enable for selective retrieval.
2. Navigate to the screen that contains the record you must synchronize.

   Selective Retrieval supports the following screens:

   - Accounts
   - Contacts
   - Opportunities
   - Projects
   - Service Requests
3. Navigate to a predefined view for the chosen screen.

   For example, navigate to the My Accounts view or the All Accounts view of the Accounts screen, or the Project List view of the Projects screen.
4. Query for the record that you must include in future synchronizations.
5. In the list or in the form that the Siebel application displays for the record, click Menu, and then choose Make Available Offline.

Disabling Records for Selective Retrieval While Logged in as a User

This topic describes how to disable a record for selective retrieval while logged in as a user.

To disable records for selective retrieval while logged in as a user

1. Do Step 1 in the topic *Enabling Records for Selective Retrieval While Logged in as a User* except log in to the Siebel application using a direct connection to the Siebel Server or the local database.
2. Do Step 2 through Step 5 in the procedure in the topic *Enabling Records for Selective Retrieval While Logged in as a User* except choose the Make Unavailable Offline menu item.

Enabling Records for Selective Retrieval While Logged In as an Administrator

This topic describes how to enable a record for selective retrieval while logged in as an administrator.

To enable records for selective retrieval while logged in as an administrator

1. Log in to the Siebel Server with administrator privileges.

   For more information, see *Logging in to the Siebel Database as an Administrator*.
2. Navigate to an administrative view that displays the record you must synchronize:
   - For an account, navigate to the Accounts screen, and then the Accounts Administration view.
   - For a contact, navigate to the Contacts screen, and then the Administration view.
   - For an opportunity, navigate to the Opportunities screen, and then the Opportunities Administration view.
   - For a project, navigate to the Administration - Data screen, and then the Projects view.
   - For a service request, navigate to the Service screen, and then the Service Requests List view. Use the visibility filter to display All Service Requests.
3. Query for the record that you must include in future synchronizations for a user.
4. If the object is an account, contact or opportunity, then click Menu, choose Columns Displayed, and then move the field described in the following list to Selected Columns:
   - For an account, display the Account Team field in the Accounts list.
   - For a contact, display the Contacts Team field in the Contacts list.
   - For an opportunity, display the Sales Team in the Opportunities list.
   - For a project, skip this step. The Members field is already visible in the Details area of the Project form.
   - For a service request, skip this step. A service request contains a single owner. The owner is the only user for whom you can enable the record for synchronization.
5. Click Save.
6. Display the dialog box according to the type of record you are enabling for selective retrieval:
   - For an account, click the select icon in the Account Team field to display the Account Team Member dialog box.
   - For a contact, click the select icon in the Contact Team field to display the Access List dialog box.
   - For an opportunity, click the select icon in the Sales Team field to display the Team Members dialog box.
   - For a project, in the Details area of the Projects form, click the select icon in the Members field.
   - For a service request, skip this step, and proceed to Step 8.
7. In the Selected list, choose the user with whom Siebel Remote must synchronize the record, scroll to the right, make sure the Available Offline check box contains a check mark, and then click OK.
8. For a service request, in the All Service Requests list, click Menu, and then choose the Make Available Offline menu item.

Disabling Records for Selective Retrieval While Logged in as an Administrator

This topic describes how to disable a record for selective retrieval while logged in as an administrator.

To disable records for selective retrieval while logged in as an administrator

1. Do Step 1 through Step 6 in the previous procedure.
2. Remove the record from selective retrieval:
   - For an account, contact, opportunity, or project, do Step 7 in the previous procedure, except make sure the Available Offline check box does not contain a check mark.
   - For a service request, do Step 8 in the previous procedure, except choose the Make Unavailable Offline menu item instead of the Make Available Offline menu item.

Using Responsibilities to Route Data

Some routing models include a predefined responsibility. You can use the responsibility and the routing model to control the data that Siebel Remote routes to a remote client.

To use responsibilities to route data

1. Log in to the Siebel Server with administrator privileges.

   For more information, see *Logging in to the Siebel Database as an Administrator*.
2. Navigate to the Administration - Application screen, and then the Responsibilities view.
3. In the Responsibilities list, query the Responsibility field for the name of the routing model, such as Sales Manager Routing Model.
4. Examine the Views list.
5. Use the responsibility and the routing model to control the data that Siebel Remote routes to a remote client.

Modifying a Routing Model

If you use the Database Extensibility feature to create an extension table, then you can sometimes use the docking wizard in Siebel Tools to create a routing rule. You can use this wizard for a custom table that you have not yet placed in a dock object or for a custom extension column that you have not yet added to a predefined table. If you use this wizard to create a new rule, then to maintain optimum performance, it is recommended that you index the server database columns that the new rule affects. For help with modifying a routing model, see *Getting Help from Oracle*. For more information about the docking wizard, see *Configuring Siebel Business Applications* .

Limiting the Views That a Remote Client Displays

This task is a step in *Process of Configuring the Remote Client*.

This topic includes the following information:

- *Limiting Access to Views by Modifying Responsibilities*

- *Limiting Access to Views by Disabling Local Access in Routing Model Responsibilities*
- *Limiting Access to Views for All Responsibilities*
- *Limiting Access to the Global Accounts View*

You can use one or more of these topics to limit how Siebel Remote displays views in the remote client

You can assign a user to a routing model to optimize the size of the local database that Siebel Remote uses for this user. You can limit the views that the user can access to match the data that Siebel Remote routes to the user. It is recommended that you limit views for all users except users who use the Standard routing models or models that are similar to the Standard models, such as the Life Sciences User routing model.

Determining the views a user can access depends on the responsibilities that you assign to this user and on the views that you assign to each responsibility. Each view that is associated with a responsibility includes a Local Access flag. You can turn this flag off to remove access to the view. This limitation applies only if the user uses a remote client (Mobile Web Client). It does not apply if the user uses the Siebel Web Client.

Limiting Access to Views by Modifying Responsibilities

This topic describes how to limit access to a view by modifying the user responsibilities. For important caution information, see *How Positions, Organizations, and Responsibilities Affect Access*.

> **Note:** Responsibilities and their relationship to Views can be Workspace enabled in your development environment. If they have been Workspace enabled in your development environment and you are working in that environment, then you can only modify them in an editable Workspace. You do not need an editable Workspace to create and edit Responsibilities and their relationship to Views in your Production environment.

To limit access to views by modifying responsibilities

1. Log in to the Siebel Server with administrator privileges.

   For more information, see *Logging in to the Siebel Database as an Administrator*.
2. Identify the responsibilities that are assigned to this user:
   a. Navigate to the Administration - User screen, and then the Users view.
   b. Query the User ID field for the user that Siebel Remote must limit access.
   c. Click the select icon in the Responsibility field.
   d. Examine the Selected window to identify the responsibilities that are assigned to this user.

      You can assign a user to multiple responsibilities, and each of these responsibilities can include the same view. If the Local Access check box does not contain a check mark for the view in any of the responsibilities that are assigned to the user, then the view is not available on the remote client. In this situation, the view does not display in any navigation element on this client, including the Site Map.
3. Identify the views that the user does not require.
4. Navigate to the Administration - Application screen, and then the Responsibilities list.
5. Query the Responsibility field for the primary responsibility that is assigned to the user.
6. In the Views list, query the View Name field for the view that the user does not require.
7. Make sure the Local Access check box does not contain a check mark.
8. Repeat Step 6 and Step 7 for each additional view that the user does not require.
9. Repeat Step 5 and Step 8 for each additional responsibility that is assigned to the user.
10. Inform the user that they must log out and then log back in to the remote client.

For more information, see *Updating a Responsibility*.

Limiting Access to Views by Disabling Local Access in Routing Model Responsibilities

This topic describes how to limit the views that a routing model responsibility allows. A routing model responsibility is a type of responsibility that includes Routing Model as the suffix in the responsibility name. The Sales Representative Routing Model is an example of a routing model responsibility. If you use this configuration, then is not necessary for you to examine the local access settings for other responsibilities.

Note: Responsibilities and their relationship to Views can be Workspace enabled in your development environment. If they have been Workspace enabled in your development environment and you are working in that environment, then you can only modify them in an editable Workspace. You do not need an editable Workspace to create and edit Responsibilities and their relationship to Views in your Production environment.

To limit access to views by disabling local access in routing model responsibilities

1. Log in to the Siebel Server with administrator privileges.

   For more information, see *Logging in to the Siebel Database as an Administrator*.
2. Navigate to the Administration - Application screen, and then the Responsibilities list.
3. Locate the responsibilities that contain the routing model suffix. Do the following work:
   a. Click Query.
   b. Enter the following value in the Responsibility field:

      ```
      *Routing Model*
      ```

   c. Press Enter.

   Siebel CRM displays the following routing model responsibilities:

   - Sales Representative Routing Model
   - Sales Manager Routing Model
   - Minimal Data Routing Model
   - Analyst Routing Model
4. In the Views list, add a view to the responsibility that the user must not access.
5. Make sure the Local Access check box does not contain a check mark for the view you added in Step 4.
6. Optional. Repeat Step 4 and Step 5 to limit access to more views.

Limiting Access to Views for All Responsibilities

Limiting access to a view provides a more global way to limit access than limiting access to a view according to a responsibility. If you use the procedure that this topic describes, then Siebel Remote limits access to the view for every responsibility that references the view.

To limit access to views for all responsibilities

1. Log in to the Siebel Server with administrator privileges.

   For more information, see *Logging in to the Siebel Database as an Administrator*.
2. Navigate to the Administration - Application screen, and then the Views list.
3. In the Views list, query the Name field for the view where you must limit access.
4. Make sure the Default Local Access check box does not contain a check mark.

The Views list includes the entire list of views that the Siebel application displays. It includes a subordinate Responsibilities list that allows you to identify the responsibilities that Siebel CRM associates with a view. The Local Access flag determines if a view is available for the user that Siebel CRM assigns to the responsibility.

Limiting Access to the Global Accounts View

It is recommended that you limit access to the My Global Accounts view for the remote client. The My Global Accounts view references tables that private dock objects use. For example, the table that the Global Account Detail - Sub Account view references is a part of the following visibility:

```
Dynamic Hierarchy Dock Object with Private
```

If the user accesses this view, then Siebel CRM might display an error message that is similar to the following message:

```
The selected record is not included as part of your responsibility.
```

The Global Accounts view is not of the All visibility type. It is recommended that the view not be available to the user. Data visibility is one of the following types:

- Enterprise
- Limited
- Private

This visibility controls only data routing from the Siebel Server to the remote client. It does not control the visibility of any views on the remote client. The responsibility that Siebel CRM uses for the remote client determines if a view is visible.

6 Extracting and Initializing a Remote Server

Extracting and Initializing a Remote Database

This chapter describes how to extract and initialize a remote database. It includes the following topics:

- *Process of Extracting the Server Database*
- *Options for Extracting the Server Database*
- *Initializing the Local Database*

Process of Extracting the Server Database

This process is a step in *Roadmap for Implementing Siebel Remote*.

You do the following tasks to extract the server database for a remote client:

1. *Verifying the Reporting Hierarchy and Employee Status*
2. *Extracting the Server Database*

You must repeat this process for each remote client.

Verifying the Reporting Hierarchy and Employee Status

This process is a step in *Process of Extracting the Server Database*.

You must make sure that the reporting hierarchy for your organization is accurate and that the employee status is valid before you can extract the server database for a remote client.

To verify the reporting hierarchy and employee status

1. Log in to the Siebel Server with administrator privileges.

   For more information, see *Logging in to the Siebel Database as an Administrator*.
2. Make sure the reporting hierarchy for your organization is valid:
   a. Navigate to the Administration - Group screen, and then the Positions view.
   b. Verify that the user you are about to extract contains a valid position in your organization hierarchy.

      The routing rules use information from the Positions view of the Administration - Group screen. This information might affect the server database extract. For more information, see *How Positions, Organizations, and Responsibilities Affect Access* and *Siebel Applications Administration Guide* .
3. Verify the employment status.

   You must make sure that the Employee record for the remote client displays a status of Active. Some earlier versions of Siebel CRM did not populate this field. An inactive status or a null field value might prevent a successful extraction and initialization, and might cause incorrect data routing. You do the following work:

a. Navigate to the Administration - User screen, and then the Employees view.
b. Query the User ID field for the employee record you must verify.
c. Click the Last Name field.
d. Click the Job Information view tab.
e. In the Job Information form, verify that the Employment Status field is Active.

   The remote client environment requires a value of Active.

How Positions, Organizations, and Responsibilities Affect Access

Employee responsibilities and positions determine the access that the user possesses to the server database. Balancing the data routing model with user access helps to optimize the size of the local database for this user. It also helps to minimize synchronization time. You must make sure the routing model is consistent with the user responsibilities and position. For information about configuring the routing model, see *Configuring the Remote Client to Automatically Synchronize*.

Keeping Organization Information Current on the Remote Client

Modifications that you make to your organization, such modifying a position, division, or territory, can cause routers to reevaluate visibility for objects that are related to these modified objects. These modifications can affect Transaction Router performance and can result in a large backlog of transactions.

The remote client environment requires a value of Active. Siebel Remote creates progressively more transactions the higher in the hierarchy where you modify, add, or delete a position. The Transaction Processor and the Transaction Router might require a significant amount of time to work through the backlog and route these modifications to users. You can do the following to improve throughput:

- Keep organization information current on the remote client
- Use multiple routers

To keep organization information current on the remote client

- Reextract users after you modify your organization.

> **CAUTION:** For important caution information about modifying a position for a user or modifying a routing model, see *Requirements for Extracting the Server Database*.

For more information, see *About the Standard Routing Model*.

Updating a Responsibility

If you modify a user responsibility, then Siebel Remote downloads this new information to the local database during the next synchronization. It is not necessary to reextract the server database. For more information, see *Limiting Access to Views by Modifying Responsibilities*.

> **Note:** Responsibilities and their relationship to Views can be Workspace enabled in your development environment. If they have been Workspace enabled in your development environment and you are working in that environment, then you can only modify them in an editable Workspace. You do not need an editable Workspace to create and edit Responsibilities and their relationship to Views in your Production environment.

To update a responsibility

1. Modify the responsibility on the Siebel Server.
2. Inform the user to synchronize, log out, and then log back in to the remote client.

   This step is necessary to access the views that Siebel Remote displays under the new responsibility.

Extracting the Server Database

This process is a step in *Process of Extracting the Server Database*.

Database extraction uses the server database template that the Siebel Server creates when you run the Generate New Database server component. This template provides an up to date database schema to a new or existing remote client. It is strongly recommended that you distribute all database schema modifications to all remote clients.

The Database Extract server component (alias DbXtract) does the following work:

1. Identifies visible instances for all members of a list of nodes.
2. Identifies the commonly visible instances and extracts the records only one time for all these nodes.
3. Extracts instances that reside outside of the common set for each node.

This configuration helps to reduce the time that Siebel Remote requires to extract a large number of users. The Optimal Mode parameter enables this process. If the Optimal Mode parameter is TRUE, then other parameters can affect the time that Siebel Remote requires to complete the extraction. Example parameters include Nodes Per Group and Extract All Repository Files.

> **CAUTION:** If the Siebel Gateway uses LDAP authentication, then, when you run a job for Database Extract, you must explicitly specify valid database credentials to connect to the Siebel database. Otherwise, the component task fails, with this message: `Unable to connect to Database`. For example, you might run the job by entering a command like this on the srvrmgr command line: `start task for comp dbxtract with username=user_name, password=pwd`

Related Topics

How Siebel Remote Extracts Local Databases

Controlling the Data That Siebel Remote Routes to Clients

Requirements for Extracting the Server Database

Options for Extracting the Server Database

Parameters of the Database Extract Server Component

Related Books

Siebel Performance Tuning Guide

To extract the server database

1. Make sure you complete all required work.

   > **CAUTION:** Do all required work before you extract the server database.

For more information, see *Requirements for Extracting the Server Database*.

2. Log in to the Siebel Server with administrator privileges.

   For more information, see *Logging in to the Siebel Database as an Administrator*.
3. If the local database contains unsynchronized transactions, then you must attempt to synchronize those transactions before you proceed.
4. Before running DbXtract for the first time, review whether you must stop the Transaction Processor component (TxnProc) before proceeding.

   For more information, see *Requirements for Extracting the Server Database*.
5. Navigate to the Administration - Server Management screen, and then the Jobs view.
6. In the Jobs list, click New.
7. In the Component/Job field, choose Database Extract from the picklist.
8. In the Requested Server field, enter the name of the Siebel Server where Siebel Remote runs the Database Extract job.

   After the job finishes, the read-only Execution Server field displays the name of the Siebel Server that ran the job. For a Database Extract job, this server is the same as the Requested Server.
9. Locate the Job Parameters list.
10. Click New in the Job Parameters list that you located in Step 8, and then add a parameter using values from the following table.

Parameter Name	Description
Client Name	Enter the remote client name.

For more information, see *Extracting a Database for Multiple Users*.

11. Optional. To use DAT format for the server database extract file, click New, and then add a parameter using values from the following table.

Parameter Name	Value
Data File Type	DAT

12. Optional. To specify a password for the database administrator on the remote client, click New, and then add a parameter using values from the following table.

Parameter Name	Value
Client DBA Password	Use the same value that you use with Generate New Database.

13. With the Database Extract record still chosen, click Start in the Jobs list.

    Siebel Remote extracts the server database for the remote client. This step might require a few minutes to finish.

If you receive an error that is similar to the following, then see *Rerunning a Database Extract to Avoid a Concurrency Error*:

```
Target node is currently in use by another server process
```

14. If performance degrades during the extract, then take corrective action.

    For more information, see *Monitoring Performance of a Server Database Extract*.

Requirements for Extracting the Server Database

Perform or review all of the items that this topic describes before you extract the server database, as described in *Extracting the Server Database*. If you do not do this, then it might be necessary for you to reextract the server database for all users, which can be a time consuming and tedious task.

Do all the following tasks before you extract the server database:

- Make sure the same conflict resolution rule is in effect for the local databases and for the server databases to maintain integrity across databases. You can specify the rule as part of the initial Siebel Remote implementation on your server database before you run a database extract for any client so that Siebel Remote copies the rule consistently to all remote clients.
- Set the Intersection Table Conflict Resolution field before you extract any remote client. If you modify this field after extraction, then you must reextract all remote clients. If you do not reextract all clients, then server data and client data might diverge.
- Set the Intersection Table Merge Rule field before you extract any remote client. If you modify this field after extraction, then you must reextract all clients. If you modify this field after extraction, and if you do not reextract all clients, then server data and client data might diverge.
- Make sure you test time filtering thoroughly before you use it in a production environment. Make sure the cutoff dates you choose for time filtering allow the necessary data to reach the test remote clients. Deploying an incorrect cutoff date can prevent stable but necessary data from reaching the remote client. Price lists or rate lists are examples of this data. If you must choose an earlier cutoff date after you deploy Siebel Remote to a production environment, then it might be necessary for you to reextract all remote clients.
- If you modify the server database schema after you deploy Siebel Remote to a production environment, then you must run the Generate New Database server component and reextract all remote clients, or you must use a Siebel Anywhere kit to distribute this modification to all remote clients. It is strongly recommended that you do this even if this modification only affects a private dock object because individual tables in a private dock object might become visible to a remote client at a later time. Problems might occur if the server database structure does not match the local database structure.
- Define all positions and routing models before you deploy Siebel Remote to a production environment. If you must modify the Position for a user or a routing model, then you must reextract the server database to the remote client so that Siebel Remote deletes the records that it must not display to the user, according to the modified position. This configuration also improves Transaction Router performance because a reporting hierarchy reorganization for your company creates many transactions on the Siebel Server, and these transactions might cause a backlog.
- Set the routing group before you deploy Siebel Remote to a production environment. If you modify the routing group from Standard to Full Copy after deployment, then you must reextract all remote clients that are associated with the regional node.
- You must not rename or delete any DX files that exist in the `siebsrvr\docking\client\inbox` folder. If you rename or delete these files, then you will lose the transactions and you must reextract the remote client.
- When the Enable Incremental Indexing system preference is set to True, the Transaction Processor component (alias TxnProc) runs automatically. The TxnProc component has the status Running and the MobileSync

component group has the status Online. In this case, you must stop TxnProc before you run the Database Extract component (alias DbXtract) for the first time. After DbXtract has completed, then you can restart TxnProc.

> **CAUTION:** If you do not stop TxnProc before running DbXtract for the first time, then some transactions might not be routed to remote clients. For more information about using the Enable Incremental Indexing system preference, see *Siebel Search Administration Guide* and *Siebel Marketing Installation and Administration Guide* .

Rerunning a Database Extract to Avoid a Concurrency Error

If another Siebel Server process uses the target node, then Siebel CRM might display an error message. For example, if another Siebel Server process is accessing the inbox or outbox folder for user sjones, then Siebel CRM might display an error message that is similar to the following:

```
Target node "sjones" is currently in use by another server process. Try again later.
```

Rerunning a database extract to avoid a concurrency error

- Wait a few minutes, and then rerun the server database extract.

  If you wait a few minutes, then the file might be available and unlocked.

Monitoring Performance of a Server Database Extract

If you observe performance degradation, then it might be necessary to limit the number of children records for each parent record. The visibility for all children must be examined for each child. Attaching many children to the same parent record can degrade the performance of the router and the server database extract. This is true for objects with limited visibility. If more than 10,000 child records are attached to a parent record, such as with contacts attached to an account, then you must thoroughly test the performance of the server database extract and router.

How Siebel CRM Manages Modifications in the S_DOCK_SESSION Table

Siebel Remote stores the synchronization history of the remote client in the S_DOCK_SESSION table. It uses the data in this table for one of the Siebel Remote status reports. Although it does not remove the data in this table, reextracting a remote client automatically cleans up table rows that Siebel Remote associates with that client. For example, if you create a new account and assign it to the remote client, then Siebel Remote adds a new row for this client to the S_DOCK_SESSION table. If you reextract and reinitialize the remote client, then Siebel Remote removes the row that it created in the S_DOCK_SESSION table for the account. To clean up the S_DOCK_SESSION table, it is not necessary to resynchronize the remote client.

The LAST_ATTACH_BYTES column of the S_DOCK_SESSION table contains the last chunk of bytes for the last file attachment that Siebel Remote processes. It uses this column with the LAST_ATTACH_FILE column that stores the file name of the last attachment file that it processed.

Options for Extracting the Server Database

This topic describes options available to you when you extract the server database. It includes the following information:

- *Extracting a Database for Multiple Users*
- *Extracting a Database for Hundreds of Users*

- *Running Multiple Instances of Database Extract*
- *Using a Transaction Log to Optimize Performance*
- *Setting Encryption on the Local Database Password*
- *Extracting a Database to a CD-ROM or Other Portable Media*
- *Truncating the dobjinst.dbf Database Tables*
- *Saving Transactions That Siebel Remote Does Not Include in an Extract*

Extracting a Database for Multiple Users

To simultaneously extract a database for multiple users, you create a text file that includes a list of the User IDs of the users. You then reference that text file in the Client Name parameter of the database extract.

In this example, assume you must configure Siebel Remote to do a database extract for the following users: AMARTIN, CCHENG, PSINGH and RMARLOW. To create a database extract for multiple users at the same time, you must create a text file that contains the user IDs of these users.

To extract a database for multiple users

1. Create a text file named clientlist.txt that contains the user IDs you require, such as the following new users:
    - AMARTIN
    - CCHENG
    - PSINGH
    - RMARLOW

    The text file must contain the user ID for each user. To separate each user ID in this file, you can use a space, comma, semicolon, new line, or tab.
2. Do the procedure that starts with *Extracting the Server Database*.

    In Step 9 in the topic *Extracting the Server Database*, enter a command like the following:

    ```
    @\\server\clientlist.txt
    ```

    In this command, `\\server\clientlist.txt` is the path to the text file you created in Step 1.
3. To view the new subfolders for AMARTIN, CCHENG, PSINGH, and RMARLOW, examine the `siebsrvr\docking` folder.
4. To confirm successful extraction, determine if compressed files exist in the `outbox` subfolder for each new folder that you examined in Step 3.
5. If you are using more than one list, then start another instance of Database Extract.

    Make sure you specify a different value for the TS Table Number parameter.

Extracting a Database for Hundreds of Users

You can extract a database for hundreds of users.

To extract a database for hundreds of users

1. Separate users into multiple lists that contain about 50 to 100 users for each list, where each list contains users who all synchronize with the same Siebel Server.
2. Log on to the Siebel Server that Siebel Remote uses to synchronize the users in this list.
3. Start a Database Extract task for each list.

Running Multiple Instances of Database Extract

You can run multiple instances of the Database Extract server component. If you do run multiple instances, to reduce contention, it is recommended that you assign each task to use a different temporary name for the S_DOCK_INITM_n table. Siebel Remote supports up to 100 such tasks. The Siebel schema includes 48 S_DOCK_INITM tables. If you require more temporary tables, then you can use Siebel Tools to create them. For more information, see *Parameters of the Database Extract Server Component*.

To run multiple instances of database extract

- Assign a different temporary S_DOCK_INITM_n table for the TS Table Number parameter for each instance of Database Extract that you run.

  For example, assign S_DOCK_INITM_2 for one instance, and assign S_DOCK_INITM_3 for another instance.

Using a Transaction Log to Optimize Performance

When operating without a transaction log, Oracle Database SE2 must use a checkpoint at the end of every transaction. Writing these modifications consumes considerable resources, and it can degrade performance.

To enable Oracle Database SE2 to write notes that detail modifications as they occur, you can use a transaction log. Oracle Database SE2 can write the new database pages all at one time and at a time that is more efficient. Checkpoints make sure information enters the server database file and that this information is consistent and up to date.

To use a transaction log to optimize performance

1. Open the Server Manager command line.

   For more information, see *Opening the Command Line Interface for Server Manager*.
2. Enter the following command:

   ```
   srvrmgr> change param ClientDbTxnLog=True for comp dbxtract
   ```

   This command sets the ClientDbTxnLog parameter to True for the Database Extract server component. Subsequent database extracts include a transaction log.

Setting Encryption on the Local Database Password

You can encrypt the local database password.

To set encryption on the local database password

1. Make sure the Siebel Server and the parameters in the configuration file are configured to allow for encryption. For more information, see *Process of Configuring Encryption and Authentication for the Remote Client*.
2. When you run a database extract, set the following parameter to TRUE:
   Encrypt client Db password (alias EncryptLocalDbPwd)

   > **Note:** Password encryption interferes with project checkin and checkout. If the developer checks projects in and out, then you must not use password encryption in the remote client. When you run a database extract, do the following, set EncryptLocalDbPwd to FALSE.

   For more information about:
   - Parameters, see *Parameters of the Database Extract Server Component*.
   - Extracting a database, see *Extracting the Server Database*.

Related Topic

Configuring Encryption for the Local Database Password

Extracting a Database to a CD-ROM or Other Portable Media

A database extract stores the compressed file on the Siebel Server, by default. To download data and initialize the local database, the user logs on to the Siebel Server. A database extract can also store the compressed file in a folder that you specify in the server database extract parameters. This feature allows you to copy the compressed database file from a folder, and then make an image of the files on a CD-ROM or other media device, that you can then distribute to users. The user can initialize the local database directly from the CD-ROM rather than having to download it from the Siebel Server.

The remote client must synchronize before it gets a database extract from a CD-ROM. The remote client requires a network connection to do this synchronization.

To extract a database to a CD-ROM or other portable media

1. On the Siebel Server, delete any .toc, .uaf, and .dat files that exist in the docking folder of the user. Removing these files makes sure that the remote client does not attempt to download the files from the Siebel Server during the next synchronization.
2. Complete the procedure described in *Extracting the Server Database*, with the following modifications:
   a. After you add the Client Name in the Component Request Parameters list, click New to add the CD Directory parameter using values from the following table.

Parameter Name	Value
CD Directory	Specify the name of the folder on the CD-ROM that Siebel Remote uses to extract the server database files. For example, type the following text:

Parameter Name	Value
	`E:\db_extract\username` where: - E: is the drive that contains the CD-ROM - `db_extract\username` is a folder on the CD-ROM

b. Modify the values of other parameters, as necessary.

For more information, see *Parameters of the Database Extract Server Component*.

3. In the Component Requests form, click Menu, and then click Submit.

Siebel Remote extracts the local database to the folder that you specify in the CD Directory parameter. You can create an image of these files on a CD-ROM or other media device.

Truncating the dobjinst.dbf Database Tables

During the cleanup of the dobjinst.dbf database tables, you can choose to truncate or delete the tables. For more information, see *Parameters of the Database Extract Server Component*.

To truncate the dobjinst.dbf database tables

- Set the Truncate TS Table parameter to TRUE.

CAUTION: If two instances of Database Extract use the same table, then do *not* set Truncate TS Table to TRUE. One instance can truncate the records that Siebel Remote enters from another instance.

Saving Transactions That Siebel Remote Does Not Include in an Extract

To prevent the loss of local transactions that a user might enter in the local database, you can use the Save Client Transactions parameter. This feature is valid for a typical reextract of the local database for the user. It does not work during a major upgrade or for records that Siebel Remote does not display for the user.

If Siebel Remote extracts a server database for a remote client, and if Save Client Transactions is TRUE, then Siebel Remote does the following:

1. Extracts transactions that it has not yet synchronized with the Siebel Server. It extracts these transactions from the current local database, and then stores them in the user inbox as DX files.
2. Replaces the current local database with the new extract.
3. Applies the DX files from the user inbox to the new local database. These files include the transactions that it has not yet synchronized with the Siebel Server.
4. Sends the transactions to the Siebel Server during the next synchronization.

To save client transactions that Siebel Remote does not include in an extract

- Make sure the Save Client Transactions parameter is set to TRUE.

  For more information, see *Parameters of the Database Extract Server Component*.

Strings That Siebel Remote Does Not Send to the Local Database

Siebel Remote does not send some strings to the local database. These strings reside in the S_MSG table. For example, some workflow processes include steps that use the Error Code property. When Siebel Remote extracts the server database for a local developer, it does not correctly route the records in the S_MSG table that the Error Code property uses.

Initializing the Local Database

This process is a step in *Roadmap for Implementing Siebel Remote*.

This topic describes the following ways to initialize the local database:

- *Initializing the Local Database by Using the GUI*
- *Initializing the Local Database from the Command Line*
- *Initializing the Local Database During Login*

For options, see *Options for Initializing the Local Database*.

If you configure Siebel Remote to extract a database for a remote client, then you must initialize the local database so that Siebel Remote can exchange data exchange between this client and the Siebel Server. This includes uploading any local database modifications. Siebel Remote must download a substantial amount of information from the Siebel Server when it initializes a local database. It is strongly recommended that you create a LAN connection rather than using a WAN or VPN connection between the server and the remote client.

You can also initialize the local database from a CD-ROM or other media. For more information, see *Extracting a Database to a CD-ROM or Other Portable Media*.

Initializing the Local Database by Using the GUI

This topic describes how to initialize the local database by using the GUI.

To initialize the local database by using the GUI

1. Make sure the TableOwner parameter in the configuration file is set to the following default value:

   ```
   Siebel
   ```

   For more information, see *Modifying the Siebel Configuration File for Siebel Remote*.
2. Create a connection between the Siebel Server and the remote client.
3. In the Siebel program group on the remote client, click the Siebel Remote icon.

   The target of the icon must reference the correct configuration file. The default value is siebel.cfg.
4. In the Siebel Remote Parameters dialog box, enter the following information:

a. In the Client Name field, enter the registered remote client name.
b. In the User Name field, enter the user login name.

   For more information, see *Format That Siebel Remote Uses for the Remote Client Name, Database Name, Login ID, and Windows Password*.

5. Enter the password.

   The password must match the authenticated password.
6. Click Continue.

   Siebel Remote starts the initialization.
7. To monitor the process for errors, you can click the opposing arrows in the corner of the screen.

Initializing the Local Database from the Command Line

This topic describes how to initialize the local database from the command line.

To initialize the local database from the command line

1. Make sure the TableOwner parameter in the configuration file is set to the following default value:

   ```
   Siebel
   ```

   For more information, see *Modifying the Siebel Configuration File for Siebel Remote*.
2. Use the stand-alone synchronizer.

   For more information, see *Using the Stand-Alone Synchronizer*.

Initializing the Local Database During Login

This topic describes how to initialize the local database during login.

To initialize the local database during login

1. Make sure the TableOwner parameter in the configuration file is set to the following default value:

   ```
   Siebel
   ```

   For more information, see *Modifying the Siebel Configuration File for Siebel Remote*.
2. Log in to the remote client and connect to Local_SE.

   For more information, see *Logging in to the Local Database*.

   When the Siebel application cannot find a local database, it runs the procedure that begins with Step 1 in the topic *Initializing the Local Database by Using the GUI* to initialize the local database.

Options for Initializing the Local Database

This topic describes some of the options that are available when you initialize the local database.

Initializing the Local Database as a Nonadministrative User When Using Microsoft Windows

This topic describes how to allow a user who does not possess administrator privileges to initialize the local database when the remote client runs on Microsoft Windows.

To initialize the local database as a nonadministrative user when using Microsoft Windows

1. Log in to the Siebel Server with administrator privileges.

   For more information, see *Logging in to the Siebel Database as an Administrator*.
2. Configure the remote client.

   For more information, see *Process of Configuring the Remote Client*.
3. In Windows Explorer, right-click the folder for the remote client, choose Properties, and then click the Security Tab.
4. Choose the Group or User name.
5. Add the nonadministrative user.
6. Give full permissions, and then click OK.
7. Initialize the local database.

   For more information, see *Initializing the Local Database*.

Initializing the Local Database When Using IBM DB2 for z/OS

If you use an RAS connection with IBM DB2 for z/OS, then you must set the Database Connection Timeout parameter before you initialize the local database.

To initialize the local database when using IBM DB2 for z/OS

1. Set the Database Connection Timeout parameter of the Synchronization Manager server component to a value that is less than the actual timeout of the connection.

   For example, you might modify the DBConnectionTimeout parameter to 360. For more information, see *Parameters of the Synchronization Manager Server Component*.
2. Initialize the local database.

   For more information, see *Initializing the Local Database*.

7 Synchronizing the Remote Client

Synchronizing the Remote Client

This chapter describes how to synchronize and start the remote client. It includes the following topics:

- *Synchronizing the Remote Client*
- *Options for Synchronizing and Starting the Remote Client*
- *Configuring TrickleSync*

Synchronizing the Remote Client

This task is a step in *Roadmap for Implementing Siebel Remote*.

This topic includes the following information:

- *User Preferences for Synchronization*
- *About the Siebel Remote Dialog Box*

To get and view updates that exist in the server database, the user must synchronize. These updates might include CRM data, such as accounts and contacts, and other information that exists in the file system, such as documentation, marketing literature, and sales brochure. This topic describes how to synchronize while using a Siebel application. To synchronize in stand-alone mode, the user can also use the Siebel Remote icon.

To synchronize the remote client

1. Access the remote client.
2. Navigate to the Siebel program group, and then start the Siebel application, such as Siebel Sales.
3. Set synchronization parameters:
   a. Navigate to the User Preferences screen, and then the DB Synchronization view.
   b. In the DB Synchronization form, set the synchronization parameters.
   For more information, see *User Preferences for Synchronization*.
4. To open the Siebel Remote dialog box, do one of the following:
   - Choose the File menu in a Siebel application, and then the Synchronize Database menu item.
   - Run the stand-alone synchronizer. For more information, see *Using the Stand-Alone Synchronizer*.
5. Place a check mark next to each synchronization action that you must run.
   For more information, see *Synchronization Actions*.
6. Click Synchronize.
   Siebel Remote displays a progress indicator. If a synchronization includes upload, download, or apply operations, then the indicator initially displays the progress of the upload and download operation. If upload and download finishes, then the indicator displays the progress of the apply operation.

User Preferences for Synchronization

The following table describes parameters of the DB Synchronization view of the User Preferences screen. You can modify these parameters while synchronization runs.

Parameter	Description
Connection	Allows the user to choose a networking connection. Leaving the box empty configures the synchronization to use an existing network connection. Modifications to networking options take effect the next time synchronization makes a connection to the Siebel Server.
Retrieve Published Files	Synchronization gets files that are recently added to the Siebel File System, provided that the user possesses visibility to those files.
Retrieve Auto Update Files	Synchronization gets updates to local files that are marked for automatic update. Siebel Remote does not get any automatic update files that are not local or that are not requested. For more information, see *Retrieving Auto Update Files*.
Auto Start Synchronization	Synchronization begins as soon as you call synchronization. Siebel Remote does not display the synchronization dialog box. To display the dialog box throughout your session, you can press SHIFT when you click Start.

Retrieving Auto Update Files

The automatic update flag is local to each node. The user can choose to update files automatically without affecting other users. If you do not choose the Retrieve Auto Update Files option during this synchronization, then synchronization marks the files that must be updated. If Retrieve Auto Update Files is enabled, then synchronization makes all automatic update files current during the next session.

If the remote client receives a transaction on a file table, then synchronization determines if it must get the file locally. The default behavior is not to download files to the remote client unless the user requests the file. If the Retrieve Requested Files action is enabled, then file screens typically contain a request field that the user can choose. This field allows the user to download the file during the next docking session. If the user docks, then files are also uploaded to the Siebel Server.

If you modify a file, then you must upload the new file with the transaction to make the corporate database consistent. Siebel Remote stores these files near the corporate database on a file server. It is recommended that you name files carefully to avoid conflicts, such as two users attempting to modify a file at the same time.

About the Siebel Remote Dialog Box

The Siebel Remote dialog box contains a list of synchronization actions that the user can set.

Synchronization Actions

The following table describes the synchronization actions that are available in the Siebel Remote synchronization dialog box. Depending on the database options, the list of actions in the table might be different from the list in the example in

this topic. For instance, if you do not use a local database, then the dialog box might contain only the Connect to Server action.

Action	Description
Connect to server	Connects to the Siebel Server and then examines the version, schema, and database initialization. If a Local Database Initialization or an upgrade is pending, then this action downloads and applies the pending Local Database Initialization or upgrade. This action must run successfully to start the following actions: • Send database modifications • Get database modifications • Get requested files
Send database modifications	To send the local transactions to the Siebel Server, it sends one or more DX files and associated file attachments to the server. This action displays the number of transactions that Siebel Remote must still send.
Retrieve database modifications	To get transactions from the Siebel Server, it gets one or more DX transaction files and associated file attachments from the server. The Transaction Router server component on the Siebel Server creates these files. This action displays the number of transactions that Siebel Remote must still get.
Retrieve requested files	Gets file attachments from the Siebel Server that the user requests. This action displays the number of files that Siebel Remote must still get.
Apply database modifications	Applies database modifications that Siebel Remote gets from the Siebel Server to the local database. This action displays the number of transactions that Siebel Remote must still apply.

States of the Synchronization Action

The following table describes how the check box indicates the current state of a synchronization action. To enable or disable each action, you can make sure the check box next to the action contains a check mark.

Appearance of Check Box	Description
	**Enabled.** The action runs when it becomes the current action in the queue of actions that Siebel Remote runs.
	**Not enabled.** The action runs when it becomes the current action in the queue of actions that Siebel Remote runs.
	**Cannot run.** The action cannot run because an action on which it depends did not or will not run.

Appearance of Check Box	Description
	**Finished.** The action is finished.
	**Skipped.** Siebel Remote skipped the action.

While an action runs, you can click the check box for the action to disable it before the it finishes. If an action is running when you disable it, then the actions stops as soon as possible and synchronization continues to the next action.

The action status check boxes persist throughout the session. For example, if you start synchronization with the Apply Database Changes action disabled, then it remains disabled throughout the synchronization. If you restart the Siebel application, then the action status check boxes return to their default, enabled states.

Item Status Notice

An action consists of one or more items and subitems. The item status notice displays updated status information about the current action that Siebel Remote is running. For example, the following notice displays information about an item of the Connect To Server action:

```
Initializing. . .(counting requested files)
```

The items and subitems that display in this notice provide updated information about the synchronization for the user. On occasion, the Item Status notice might display the word `Pausing` for an instant, and then replace it with a static message, such as the following:

```
Press Synchronize to begin.
```

Progress Indicator for Transfer Time Remaining

The progress indicator for transfer time remaining is located below the item status notice. It indicates the processing time for the item that Siebel Remote is currently processing. The progress indicator provides a reasonably accurate time estimate for an action that requires a long time to finish, such as transferring files or merging transactions. It provides less accurate estimates for an action that requires less time to finish, such as connecting to the Siebel Server or server database.

Skip File Button

The Skip File button is active when Siebel Remote synchronizes an item or subitem that is not critical to the current action. Retrieving an optional attachment file is the only item that can be skipped. Clicking this button skips the current item or subitem and the current action continues. Double clicking this button creates a prompt and skips all remaining optional items for this action.

Progress Indicator for Overall Transfer Progress

This indicator monitors communication with the Siebel Server. It displays the progress toward completing the actions that require the communications connection.

Transfer Time Remaining Notice

This notice contains the estimated time for completing the actions. If Siebel Remote transfers large file attachments, then the estimated time might be inaccurate.

Synchronize Button

The Synchronize button starts synchronization. You can click this button even while Siebel Remote is doing something that might not be visible to the user, such as connecting to the local database or extracting local database modifications.

If you click Synchronize, then Siebel Remote hides the synchronization dialog box and sets the label on the button to Stop. If you click Stop, then Siebel Remote stops the synchronization. If synchronization finishes, then Siebel Remote sets the label for the button to OK. Clicking the button again hides the synchronization dialog box.

Cancel and Hide Labels on the Synchronize Button

Clicking Synchronize automatically hides the synchronization dialog box unless you hold down the SHIFT key when you click Synchronize. To display a hidden dialog box, you can click the corresponding icon in the tray.

If the synchronization dialog box is displayed:

- And if synchronization has not started, then clicking Cancel closes the synchronization dialog box and aborts synchronization.
- And if synchronization has started, then Siebel Remote sets the label on this button to Hide. Clicking Hide hides the synchronization dialog box. If the dialog box is hidden while synchronization is running, then starting synchronization redisplays the dialog box. If synchronization is finished, then starting synchronization resets and redisplays the dialog box.

Options for Synchronizing and Starting the Remote Client

This topic describes options for synchronizing and starting the remote client. It includes the following information:

- *Configuring the Remote Client to Automatically Synchronize*
- *Using the Stand-Alone Synchronizer*
- *Deploying a Predefined Routing Model*
- *Opening Multiple Remote Client Sessions*
- *Using Synchronization Manager to Manage the Cache*

You can also configure TrickleSync. For more information, see *Configuring TrickleSync*.

Configuring the Remote Client to Automatically Synchronize

This topic describes how to configure Siebel Remote to synchronize without requiring the user to manually enter credentials. To automatically provide credentials, you can use either of the following topics:

- *Using Local Database Credentials to Automatically Synchronize*
- *Using the Remember Credentials Feature to Automatically Synchronize*

Situations Where the User Must Manually Enter Credentials

If any of the following situations is true, then Siebel Remote prompts the user to manually enter synchronization credentials:

- The user has not configured the remote client to remember the synchronization password or to use the local database password to synchronize.
- The user has configured the local database credentials to synchronize but those credentials are not valid synchronization credentials.
- You modify the synchronization credentials on the Siebel Server. Siebel Remote prompts the user regardless of how the user provides synchronization credentials.

If you configure authentication for synchronization, then the user must provide credentials to synchronize. The user can manually enter credentials at each synchronization or you can configure the remote client to automatically synchronize.

Depending on the type of authentication, the user might not be able to modify the valid user name and password for synchronization from a Siebel application, although the user can do this task from outside of the Siebel application. The user can modify the local database password in the remote client. For more information, see *Format That Siebel Remote Uses for the Remote Client Name, Database Name, Login ID, and Windows Password*.

Using Local Database Credentials to Automatically Synchronize

The user can use local database credentials that Siebel Remote sends automatically as part of a synchronization request. The local database password must be identical to the valid synchronization password. If synchronization uses the local database credentials, and if these credentials are valid synchronization credentials, then Siebel Remote does not prompt the user to enter credentials during synchronization.

For more information about:

- Setting the authentication method for synchronization, see *Parameters of the Synchronization Manager Server Component*.
- Setting the local database password, see *Setting the Local Database Password*.

To use local database credentials to automatically synchronize

1. Log in to the remote client.
2. Navigate to the User Preferences screen, and then the DB Synchronization view.
3. In the DB Synchronization form, make sure the Use Local Credentials check box contains a check mark, and then click Save.

   If entries exist in the User ID field, Password field, or the Remember Credentials field, then Siebel Remote removes them.

To discontinue use of the local database credentials to automatically synchronize, make sure the Use Local Credentials check box in the DB Synchronization form does not contain a check mark.

Using the Remember Credentials Feature to Automatically Synchronize

The user can configure Siebel Remote to remember the synchronization credentials. For example, if the user modifies the local database password so that it is different from the valid synchronization password, then it is useful to remember the synchronization credentials. If the user sets synchronization to use the local database credentials, then the option to remember the synchronization credentials is not available.

If Siebel Remote remembers synchronization credentials, then it does not prompt the user for credentials during synchronization.

CAUTION: If the user does not configure Siebel Remote to remember the synchronization password, or if you do not configure Siebel Remote to automatically use the local database credentials to synchronize, then Siebel Remote prompts the user to manually enter credentials during each synchronization.

To use the remember credentials feature to automatically synchronize

1. Log in to the remote client.
2. Navigate to the User Preferences screen, and then the DB Synchronization view.
3. In the DB Synchronization form, make sure the Remember Credentials check box contains a check mark.
4. Enter the User ID.
5. In the Password field, enter the synchronization password that you assign on the Siebel Server.
6. Make sure the Use Local Credentials check box does not contain a check mark.
7. Click Save.

Using the Stand-Alone Synchronizer

To control a synchronization, the user can run the remote client in a third-party scheduling program that does a standalone synchronization. To choose the most convenient timing for the following actions, the user can use command line options:

- Download and upload transactions
- Apply downloaded transactions to the local database

The command line options allow the user to do these actions separately rather than requiring the user to do them together.

Note: You must use the stand-alone synchronizer only when the remote client is not in use. If a local connection to the remote client is open, and if the user uses the Siebel Remote icon to synchronize, then synchronization works successfully. However, if a new database extract exists for that user, then synchronization fails.

Downloading and Uploading Transactions Without Applying Them to the Local Database

You can download and upload transactions without applying them to the local database.

To download and upload transactions without applying them to the local database

1. Make sure the remote client is not in use.
2. Enter the following command in a command line on the remote client:

```
siebsync.exe /n ClientName /u UserName /p Password /p2 Password /ApplyTxns N
```

Applying Downloaded Transactions to the Local Database

You can apply transactions that were downloaded to the remote client during an earlier synchronization.

To apply downloaded transactions to the local database

1. Make sure the remote client is not in use.
2. Enter the following command in a command line on the remote client:

```
siebsync.exe /n ClientName /u UserName /p Password /p2 Password /SendTxns N /RecvTxns N /RecvFiles N
```

Command Line Options of the Stand-Alone Synchronizer

The following table describes the command line options for the stand-alone synchronizer.

Option	Definition	Required	Description
?	Help	Optional	Provides online help for usage.
a	Autostart mode	Optional	Available modes are Y or N.
ApplyTxns	Apply transactions during this synchronization	Optional	Determines whether Siebel Remote applies transactions to the local database during the current synchronization. Available modes are Y or N. The default value is Y. A value of N directs transactions that are downloaded and uploaded, but not applied.
c	Configuration file	Required	The default value is siebel.cfg.
comm	Communication parameters	Optional	Used for low-bandwidth connections.
d	Data source	Optional	The default value is local.
help	Help	Optional	Provides online help for usage.
i	Iterations	Optional	Sets the number of iterations.
l	Language	Optional	Language to use for the docking session.
n	Client name	Required	Name of the remote client. You must use uppercase letters.
p	User password	Required	Password for the server database connection. You must use uppercase letters.
p2	Confirmation password	Required	Required when initializing.
ParallelApply	Apply transactions in parallel with data transfers	Optional	You can use one of the following values: • **Y.** Apply transactions to the local database while Siebel Remote transfers other transactions between the remote client and the Siebel Server. • **N.** Apply all transactions after Siebel Remote finishes data transfer. The default value is Y.

Option	Definition	Required	Description
			If the ApplyTxns option is N, then Siebel Remote ignores the ParallelApply option.
RecvAutoUpdFiles	Receive auto updates to files	Optional	You can use one of the following values: • **Y.** The remote client downloads updates to requested files. • **N.** The remote client does not download updates to requested files.
RecvFiles	Receive files	Optional	You can use one of the following values: • **Y.** The remote client downloads files from the Siebel Server. • **N.** The remote client does not download files from the Siebel Server.
RecvPubFiles	Receive published files	Optional	You can use one of the following values: • **Y.** The remote client downloads published files. • **N.** The remote client does not download published files.
RecvTxns	Receive transactions	Optional	You can use one of the following values: • **Y.** The remote client downloads transactions from the Siebel Server. • **N.** The remote client does not download transactions from the Siebel Server.
SendTxns	Send transactions	Optional	You can use one of the following values: • **Y.** The remote client sends transactions to the Siebel Server. • **N.** The remote client does not send transactions to the Siebel Server.
sleep	Sleep time	Optional	Number of seconds to sleep between iterations.
u	User name	Required	Database connection user name. You must use uppercase letters.
v	Verbose mode	Optional	Available modes are Y or N. It might be necessary to run the Stand-Alone Synchronizer unattended by setting verbose mode to N. After synchronization, the Stand-Alone Synchronizer returns one of the following values: • **0.** The process succeeded. • **A Siebel error code other than zero.** The process failed.

Deploying a Predefined Routing Model

You must determine if it is feasible to deploy the predefined routing models that are described in *Predefined Routing Models*.

To deploy a predefined routing model

1. Analyze the usage patterns for the user.

   Identify the data that the user requires and does not require when using Siebel Remote locally.
2. Compare the usage pattern with the definition of each routing model.

   Each routing model meets the requirements for a usage pattern.
3. Examine your Siebel installation and consider the following:

   a. Did you modify any of the views that are assigned to the Siebel Responsibilities?

      For more information, see *Example of How Modifying a View Might Compromise Data Integrity*.
   b. Did you modify any of the Siebel Responsibilities by adding new views that are accessible in local mode?

      For more information, see *What Happens If a View Does Not Reference a Routing Rule*.
   c. Has a custom foreign key been exposed in a Siebel view and business component?

      Siebel Remote might not support a custom foreign key. As a result, it does not route data to support the foreign key. If the user modifies or even views any base record that contains this foreign key in the local database, then Siebel Remote might inadvertently reset the reference to null, and then synchronize this modification to the Siebel Server.
4. If the answer to any question in Step 3 is yes, then you do not use the predefined routing models.
5. If the answer to the questions in Step 3 is no, then you can conduct a field test with a small group of representative users:

   a. Use predefined routing models.

      For more information, see *Predefined Routing Models*
   b. Assess how the predefined routing models affect the Transaction Router server component.

      For more information, see *Expected Results from the Field Test of a Predefined Routing Model*.
6. If the results from the field test are acceptable, then you can deploy the routing models to users.

Example of How Modifying a View Might Compromise Data Integrity

If you add an MVG field to an existing view, and if the user modifies any fields in the row or even chooses the MVG field, then Siebel Remote might set the value of that MVG field to a No Match row id. This situation exists because Siebel Remote does not synchronize any data for the MVG to the remote client. This action implicitly creates an update transaction that Siebel Remote synchronizes to the Siebel Server during the next synchronization. If Siebel Remote synchronizes this transaction on the server, then it compromises database integrity.

What Happens If a View Does Not Reference a Routing Rule

A view typically references a routing rule that supports an object that possesses limited visibility. If you add a view that does not reference a corresponding routing rule, then Siebel Remote does not synchronize any data for that view. If you

add this view to a responsibility, and if your implementation uses Client Wins to resolve an update conflict, then the following undesirable situation might occur:

1. A user uses the new view on the remote client to create a new record.
2. The user synchronizes with the Siebel Server.
3. The user of a Web client modifies the same record on the Siebel Server.
4. The user synchronizes but does not see the updates that the user of the Web client made to the record.
5. The user modifies the record in the remote client.
6. The user synchronizes and overwrites the content of the record that resides on the Siebel Server.

   In this situation, the user unintentionally overwrites the updates that another user makes to a same record.

Expected Results from the Field Test of a Predefined Routing Model

The following table describes the results that you can expect from a successful field test.

Expected Result	Description
The size of the local database and the amount of data that Siebel Remote synchronizes decreases.	These metrics must be smaller if you use a predefined routing model when compared to your previous routing model.
The user can still do business tasks.	Data must not be missing that prevents the user from completing a critical business process.
Synchronization times decrease.	The predefined routing model must result in a shorter synchronization time than the synchronization time that Siebel Remote experiences if you use the previous routing model.
Siebel Remote routes every server transaction to the remote client except for those transactions that the routing models explicitly exclude.	If Siebel Remote does not route every transaction, then the user responsibility might not match the routing model.
Every view that accesses data on the Siebel Server displays the same data on the remote client.	If every view that accesses data on the Siebel Server does not display the same data on the remote client, then there is a strong possibility that you included incorrect views in the user responsibility.

Opening Multiple Remote Client Sessions

It is recommended that you instruct the user not to open multiple remote client sessions that run simultaneously. Opening multiple sessions can cause unexpected results because the user might circumvent a critical validation. For example, if multiple sessions are open, then the user can do the following undesirable actions:

- Add a product to a call after the user saves the signature.
- Delete an activity that includes a signature.
- Create a sample adjustment that does not include a reason code.

These actions are not desirable because they allow the user to violate compliance requirements that exist in the Siebel application.

Using Synchronization Manager to Manage the Cache

The multithreaded Synchronization Manager maintains a collection of open database connections, or context cache, that it can parcel out to the active task threads and reuse. Each server creates two connections during start-up, by default. Synchronization Manager might create more contexts dynamically, but the Siebel Server maintains a maximum of only 10 context caches, by default.

To specify the minimum cache size, you can use the Minimum Number of Cached Thread Contexts parameter (MinCtxCache). To specify the maximum cache size, you can use the Maximum Number of Cached Thread Contexts parameter (MaxCtxCache). A larger cache might be helpful for a configuration where multiple remote clients synchronize. An excessive number of inactive database connections can degrade system performance.

The Synchronization Manager creates the number of cached contexts that the MinCtxCache parameter specifies at start-up. A cached context decreases the time that Siebel Remote requires to start a new synchronization. If a large number of remote clients synchronize simultaneously, then you can increase the cache size.

The Synchronization Manager can simultaneously service up to the number of synchronizations that the MaxTasks parameter specifies. Synchronization Manager only keeps in memory, at most, the number of cached contexts that the MaxCtxCache parameter specifies.

For more information, see *Parameters of the Synchronization Manager Server Component*.

Configuring TrickleSync

This topic describes how to configure TrickleSync on the Siebel Server or on the remote client. It includes the following information:

- *Configuring TrickleSync from the Siebel Server*
- *Configuring TrickleSync from the Remote Client*
- *Options for Configuring TrickleSync*

For information about the synchronization credentials that relate to TrickleSync, see *Configuring the Remote Client to Automatically Synchronize*. For more information, see *How Siebel Remote Uses TrickleSync to Manage Synchronization Frequency*.

Configuring TrickleSync from the Siebel Server

You can configure TrickleSync for one or more users from the Siebel Server.

Configuring TrickleSync from the Siebel Server for Multiple Users

This topic describes how to configure TrickleSync for multiple users from the Siebel Server.

To configure TrickleSync from the Siebel Server for multiple users

1. Log in to the Siebel Server with administrator privileges.

   For more information, see *Logging in to the Siebel Database as an Administrator*.

2. Navigate to the Administration - Siebel Remote screen, and then the TrickleSync view.
3. In the TrickleSync list, choose multiple users who require TrickleSync.
4. Choose the Edit menu, and then the Change Records menu item.
5. In the Change Records dialog box, in the first Field to Change section, choose TrickleSync Enabled from the Field list.
6. In the accompanying Value field, enter Y.
7. In the second Field to Change section, choose TrickleSync Frequency from the Field list.
8. In the accompanying Value field, enter the synchronization frequency.

   For more information, see *Options for Configuring How Frequently Siebel Remote Uses TrickleSync*.
9. In the third Field to Change section, choose TrickleSync Schedule from the Field list.
10. In the accompanying Value field, enter a date and time, such as 11/19/2018 4:10 PM.

    For more information, see *Options for Date and Time Scheduling of TrickleSync*.
11. Click OK.
12. Notify users to do a manual synchronization.

    For more information, see *How Siebel Remote Synchronizes TrickleSync Modifications from the Siebel Server*.

Configuring TrickleSync from the Siebel Server for One User

This topic describes how to configure TrickleSync for one user from the Siebel Server.

To configure TrickleSync from the Siebel Server for one user

1. Log in to the Siebel Server with administrator privileges.

   For more information, see *Logging in to the Siebel Database as an Administrator*.
2. Navigate to the Administration - Siebel Remote screen, and then the TrickleSync view.
3. In the TrickleSync list, query the Name field for the user who requires TrickleSync.
4. In the TrickleSync form, make sure the Enable TrickleSync check box contains a check mark.
5. In the Synchronization Frequency field, choose the synchronization frequency.

   For more information, see *Options for Configuring How Frequently Siebel Remote Uses TrickleSync*.
6. In the corresponding time units field, choose the time interval to use between TrickleSync operations for the user.

   For example, if you set Synchronization Frequency to Minutes, then in the Minutes field, choose a value that is between 10 minutes and 55 minutes.
7. Optional. Complete more fields in the form.

   For more information, see *TrickleSync Options That You Can Specify*.
8. Save the record.
9. Notify the user to do a manual synchronization.

   For more information, see *How Siebel Remote Synchronizes TrickleSync Modifications from the Siebel Server*.

How Siebel Remote Synchronizes TrickleSync Modifications from the Siebel Server

The Transaction Processor and Transaction Router server components make sure that Siebel Remote places your TrickleSync configuration modifications in the user outbox on the Siebel Server. The user must do one manual synchronization to send these modifications to the remote client. The user finishes this manual synchronization, and then Siebel Remote runs TrickleSync at the times you specify.

Configuring TrickleSync from the Remote Client

You can configure TrickleSync from a remote client that is initialized.

To configure TrickleSync from the remote client

1. Log in to the remote client.
2. Verify that the local database is initialized.
3. Verify that Siebel Remote added the Siebel TrickleSync program to the Windows Startup Group during installation.

   If not, copy it from the Siebel Program group. This allows the TrickleSync agent to start when the Windows session starts.
4. Log in to the local database.

   For more information, see *Logging in to the Local Database*.
5. Navigate to the User Preferences screen, and then the DB Synchronization view.
6. In the TrickleSync section of the TrickleSync form, define the TrickleSync options.

   For more information, see *TrickleSync Options That You Can Specify*.
7. In the Synchronization Frequency section of the TrickleSync form, choose a frequency from the Synchronization Frequency list, and then use the other fields to further define the frequency.

   For more information, see *Options for Configuring How Frequently Siebel Remote Uses TrickleSync*.
8. Optional. Configure a reminder:

   a. In the Synchronization Reminder section of the TrickleSync form, make sure the Enable Synchronization Reminder check box contains a check mark.
   b. In the Max Days Between Sync Sessions field, choose the number of days to wait before displaying the Synchronization Reminder dialog box, assuming that the remote client is running and no synchronization has occurred during the specified number of days.

      The reminder displays the following message:

      ```
      Do database synchronization now?
      ```

      The user can reply accordingly.

Options for Configuring TrickleSync

This topic describes configuration options you can set when you configure TrickleSync.

TrickleSync Options That You Can Specify

The following table describes options you can specify for TrickleSync.

TrickleSync Options That You Can Specify

Option	Description
Enable TrickleSync	Required. Make sure the Enable TrickleSync check box contains a check mark.
User Confirmation	Optional. If the User Confirmation check box contains a check mark, then the TrickleSync agent notifies the user before it begins a synchronization and it waits for the user to click OK before proceeding.
Maximum Network Latency	Required. Sets a network latency that prevents the TrickleSync agent from starting a synchronization. For example, at a connection speed of 56K, the threshold can be 200 to 300 milliseconds. You can create a policy for a value to use, but the individual user can modify the value for synchronization.

There is no limit to the number of times that TrickleSync attempts to complete a scheduled synchronization.

Options for Configuring How Frequently Siebel Remote Uses TrickleSync

Siebel Remote describes options you can specify to configure how frequently Siebel Remote uses TrickleSync.

Option	Description	Retry
System boot up	Do the next synchronization after the computer starts and is operational.	If a network connection is not available, then try again the next time the computer reboots.
Mobile Client Startup	Synchronize after the remote client starts.	If a network connection is not available, try again the next time the remote client starts.
Minutes	Synchronize at the interval in minutes that the Minutes picklist specifies. You can configure a TrickleSync synchronization to occur as frequently as every 10 minutes.	Not applicable.
Hourly	Synchronize every hour at the minute after the hour that the Hourly At field specifies. For example, if the Hourly At field is 25, then Siebel Remote synchronizes at a 1 to 25 ratio, a 2 to 25 ratio, and so on.	If the computer is not operational at the specified time, then Siebel Remote synchronizes at the earliest time when the computer is operational.
Daily	Synchronize every day at the time that the Daily At field specifies. For example, to specify synchronization to occur every day at 10:00 in the evening, you can enter 10:00 PM. It is not necessary to enter periods in PM.	
Weekly	Synchronize every week on the day that you choose in the Weekly On picklist, and at the time that you enter in the Weekly At field.	

Options for Date and Time Scheduling of TrickleSync

The following table describes how Siebel Remote uses the value in the TrickleSync Schedule field according to the value that you enter in the Synchronization Frequency field.

Synchronization Frequency	How Siebel Remote Interprets the Value in the TrickleSync Schedule Field
Minutes	The absolute value of the minutes in the date and time value determines the number of minutes between synchronization attempts. For example, if TrickleSync Schedule is 11/19/2018 4:10 PM, then synchronization attempts occur every 10 minutes.
Hourly	The absolute value of the minutes in the date and time value determines the number of minutes after the hour when each synchronization attempt occurs. For example, if TrickleSync Schedule is 11/19/2018 4:10 PM, then synchronization attempts occur at 10 minutes after every hour.
Daily	The absolute values of the hour and minutes in the date and time value determines the hour and minute of the day when each synchronization attempt occurs. For example, if TrickleSync Schedule is 11/19/2018 4:10 PM, then synchronization attempts occur at 4:10 PM each day.
Weekly	The day of the week for the date that the TrickleSync Schedule field contains determines the day of the week when weekly synchronizations occur. The absolute values of the hour and minutes in the TrickleSync Schedule value determines the hour and minute of the day when each synchronization attempt occurs. For example, if TrickleSync Schedule is 11/19/2018 4:10 PM, and if 11/19/2018 is a Monday, then synchronization attempts occur every Monday at 4:10 PM.
System boot up	TrickleSync does not use Date and Time information for the System frequency value. The user starts the computer, the computer establishes a network connection, and then Siebel Remote synchronizes.
Mobile Client startup	TrickleSync does not use Date and Time information for the Mobile frequency value. The user starts the computer, the computer establishes a network connection, and then Siebel Remote synchronizes.

8 Monitoring and Reporting for Siebel Remote

Monitoring and Reporting for Siebel Remote

This chapter describes how to monitor operations and how to access reports for Siebel Remote. It includes the following topics:

- *Monitoring and Logging for Siebel Remote*
- *Viewing Reports*

Monitoring and Logging for Siebel Remote

This topic describes how to monitor the status of the remote client and operations on the Siebel Server for Siebel Remote. It includes the following information:

- *Naming Conventions for Log Files*
- *Automatic Notification of Critical Conditions*
- *Monitoring the Transaction Backlog*
- *Monitoring Various Transaction Logs*
- *Monitoring the Status of the Siebel Server*
- *Configuring Traces for a Server Component*
- *Configuring Logs on the Remote Client*
- *Using Siebel Audit Trail with Siebel Remote*

Naming Conventions for Log Files

This topic lists naming conventions for server components and their associated log files on the Siebel Server and the remote client.

Log Files on the Siebel Server

The *Server Components That Siebel Remote Uses* topic describes server components and the associated log files that Siebel Remote creates in the following folder:

- On Windows, in the `SIEBEL_ROOT\log` folder on the Siebel Server. For example, `C:\siebel\ses\siebsrvr\log`.
- On UNIX, in the `/siebel/ses/siebsrvr/enterprises/enterprise_name/server_name/log` folder on the Siebel Server.

These files include information that various server components create for SQL based events. The task Id is the identification number of the server task that created the log file. For example, TxnProc_7204.log.

For more information about:

- Generating log files, see *Configuring Traces for a Server Component*.

- An example log file, see *Example Log File for Transaction Merger*.

Log Files on the Remote Client

Siebel Remote uses two naming conventions with log files on the remote client. The program log file names are Siebel.log or UpgWiz.log.

The name of the log file for the process or task is Syncthrd_123_456.log, where:

- 123 is the Id of the process.
- 456 is the Id of the task.

The location of the log file, such as the SyncThrd log file, is as follows:

- If you set SIEBEL_LOG_DIR to `SIEBEL_LOG_DIR=dir` , then Siebel Remote creates the log file in the folder that the dir parameter specifies. Make sure this folder exists and permission to write a file in that location exists.
- If no SIEBEL_LOG_DIR is specified, then Siebel Remote creates the log file in the `SIEBEL_CLIENT_ROOT\log` folder.

Automatic Notification of Critical Conditions

A critical condition might occur during processing on the Siebel Server that is related to the Transaction Router, Transaction Processor, or Transaction Merger. You can configure the Siebel Server so that if one of these conditions occurs, then the Siebel Server creates a notification alert and automatically sends an email message to you. The purpose of this notification alert is to reduce the amount of time that is required to detect and reply to these problematic conditions. The following conditions can create this notification message:

- A server component fails to start.
- A typical system failure occurs, such as the component failing or exiting abnormally.
- The Siebel Server cannot write event logs because no more disk space is available on this server.
- Siebel CRM reaches a critical throughput threshold for Siebel Remote during the Monitor Data Calculate Period, which is the number of transactions that occurs in a time period that you specify. This period can include the following items:
  - **Visible event transactions.** Transactions that affect the amount of visible data and who can view that data, such as the addition of an Account.
  - **Position rule transactions.** Visible event transactions that affect who can view specified data, such as assigning a user to an Account.
  - **Combined transaction types.**
  - **Routing throughput of the Transaction Router.**

To configure the email notification alert, you define the Monitor Data Calculate Period and other alert notification settings. For more information, see *Siebel System Administration Guide* .

Monitoring the Transaction Backlog

The Transaction Backlog view displays information about the number of Siebel Remote transactions that Siebel Remote backlogs. A backlog is a set of transactions that is waiting for the Transaction Router to route them. The Transaction Backlog view includes a count for each of the following items:

- The number of backlogged transactions that exist in the Siebel Enterprise
- The number of backlogged transactions that exist on a server, which includes users with waiting transactions that reside on the Siebel Server that you choose
- The number of backlogged transactions that exist for a user on the Siebel Server. You can specify the user.

Backlog information is available for all Siebel Servers in the Siebel Enterprise, for an individual Siebel Server, or for an individual user.

For more information, see *About the Siebel Enterprise and the Siebel Enterprise Server*, and *Troubleshooting a Large Transaction Backlog Problem*.

To monitor the transaction backlog

1. Log in to the Siebel Server with administrator privileges.

   For more information, see *Logging in to the Siebel Database as an Administrator*.
2. Monitor the combined transaction backlog for users in the Siebel Enterprise:
   a. Navigate to the Administration - Siebel Remote screen, and then the Transaction Backlog view.
   b. In the Enterprise form, click Calculate Backlog.

      The number of backlogged transactions displays. This number is the sum of the individual server backlogs.
3. Monitor the transaction backlog for a Siebel Server:
   a. Navigate to the Administration - Siebel Remote screen, and then the Transaction Backlog view.
   b. In the Servers list, choose the Siebel Server you must monitor, and then click Calculate Server Backlog.
4. Monitor the transaction backlog for a user:
   a. Navigate to the Administration - Siebel Remote screen, and then the Transaction Backlog view.
   b. In the Users list, query the User ID field for the user ID of the user you must monitor, and then click Calculate Mobile Client Backlog.

      To determine the count of backlogged transactions for a user, Siebel Remote calculates the pending transactions that are not yet routed. This might include transactions that are visible to the chosen user but are not routed to that user.

Monitoring Various Transaction Logs

This topic describes how to use the Administration - Siebel Remote views to monitor transaction logs. It includes the following information:

- *Monitoring Transaction Logs*

- *Monitoring Transaction Logs by Operation*
- *Monitoring Transaction Logs by Node*
- *Monitoring Transaction Logs by Table*
- *Support for Fields That Include the CLOB Data Type*

Monitoring Transaction Logs

This topic describes how to monitor transaction logs.

To monitor transaction logs

1. Log in to the Siebel Server with administrator privileges.

   For more information, see *Logging in to the Siebel Database as an Administrator*.
2. Navigate to the Administration - Siebel Remote screen, and then the Transaction Log view.

   The Transaction Log list displays information about each transaction.
3. Examine fields in the Transaction Log list using information from the following table.

Field	Description
Node Number	ID of the node that created the transaction.
Operation	Type of transaction completed, indicated with a letter. For example, Insert (I), update (U), delete (D), and so on. For more information, see the table in the topic *Operation Types for the Operation Field of the Transaction Log List*.
Item	Table name of the transaction.
File Flag	Flag to indicate if the transaction is on a file attachment related table.
Transaction ID	Sequence number of the transaction.
Transaction Row ID	ROW_ID of the transaction.
Transaction Updated	Timestamp of when Siebel Remote last updated the transaction.

4. Examine fields in the Detail form, using information from the following table.

Field	Description
Transaction Updated by	ROW_ID of the user who last updated the transaction.
Transaction Conflict ID	ID of the conflict for the base table record.

Field	Description
Transaction Mod ID	Version number of the base table record.
Visibility Level	Visibility event level for the transaction: Enterprise (E), or Limited (L).
Visibility Event	Indicates if the transaction is a visibility event.
Related Visibility Event	Indicates if the transaction is a related visibility event.
Dock Object Code	Dock object code of the transaction instance.
Primary Table Row ID	ROW_ID of the Primary table for the instance of the dock object.
Length (Long Log data)	Real length of the long column of the transaction data.
Log Data 1, 2, 3, 4, long	These fields hold transaction data.

Monitoring Transaction Logs by Operation

This topic describes how to monitor transaction logs by operation.

To monitor transaction logs by operation

1. Log in to the Siebel Server with administrator privileges.

   For more information, see *Logging in to the Siebel Database as an Administrator*.
2. Navigate to the Administration - Siebel Remote screen, and then the Transaction Log By Operation view.

   The fields in the Transaction Log By Operation view display information about the number of transactions for each operation, as described in the following table.

Field	Description
Operation	Type of the operation.
Number of transactions	Total number of transaction for the operation type.

Monitoring Transaction Logs by Node

This topic describes how to monitor transaction logs by node.

To monitor transaction logs by node

1. Log in to the Siebel Server with administrator privileges.

   For more information, see *Logging in to the Siebel Database as an Administrator*.
2. Navigate to the Administration - Siebel Remote screen, and then the Transaction Log By Node view.

   The fields in the Transaction Log By Node view display the number of transactions for each node, as described in the following table.

Field	Description
Node Name	remote client node name.
Number of transactions	Total number of transactions for the operation type.

   A node is a remote client or a regional server. This view only displays transactions from users and regional nodes. It does not include transactions that a person creates who is not a user who connects directly to the Siebel Server.

Monitoring Transaction Logs by Table

This topic describes how to monitor transaction logs by table.

To monitor transaction logs by table

1. Log in to the Siebel Server with administrator privileges.

   For more information, see *Logging in to the Siebel Database as an Administrator*.
2. Navigate to the Administration - Siebel Remote screen, and then the Transaction Log By Table view.

   The fields of the Transaction Log By Table view displays the number of transactions for each table in the server database, as described in the following table.

Field	Description
Item	Table name.
Number of transactions	Total number of transactions for the operation type.

Support for Fields That Include the CLOB Data Type

Siebel Remote supports synchronization for database fields that include the CLOB data type. A CLOB field can typically store up to 128K characters. CLOB can increase the maximum transaction size that Siebel Remote can log. The S_DOCK_TXN_LOG table uses a special CLOB field that can store up to 2.25MB of data. A database table can contain up to three CLOB fields. For more information, see *Modifying the S_DOCK_TXN_LOG Table*.

Monitoring the Status of the Siebel Server

To monitor Siebel Server tasks that are running or that have completed, you can use the Server Manager to view the task state values and statistics. Each state value contains information about the current operation of a server task or the server component where the task is running. The Siebel Server records statistics at the task level for server tasks. When the task finishes, task statistics roll up to the component and server levels.

To monitor the status of the Siebel Server

- Use the Server Manager to view the state values and statistics for server components and server tasks.

  For more information, see *Siebel System Monitoring and Diagnostics Guide* .

Configuring Traces for a Server Component

Siebel Remote includes tracing capability for Remote and Replication Manager server components that improves system diagnostics. Trace files track SQL statements that a server component sends. They include some information about the task or function that's in progress.

The topics in this section contain information about configuring traces for server components. For information not detailed here, see My Oracle Support.

Configuring Traces for a Server Component by Using an Administrative Screen

This topic describes how to set tracing for a server component by using an administrative screen.

To configure traces for a server component by using an administrative screen

1. Locate the record for the server component you must trace.

   For more information, see *Server Components That You Can Use with Tracing* and *Locating the Record for a Server Component*.
2. In the Events list, choose the Event Type you must trace.

   To help determine the Event Type to choose, you can use the Description field. For more information, see *Using Event Logging with Server Components*.
3. Set the value in the Log Level field to 4.

   The log file for the server component you choose in Step 2 will contain the tracing information.

Configuring Traces for a Server Component by Using a Command Line

This topic describes how to set tracing for a server component by using the command line.

To configure traces for a server component by using a command line

- From the Server Manager command line, enter the following command:

  ```
  srvrmgr: change evtloglvl event_type = 4 for server_component_name
  ```

  where:
  - event_type is the type of event that the Siebel Server traces
  - server_component_name is the name of the server component that the Siebel Server traces

  For more information, see *Opening the Command Line Interface for Server Manager*.

How the Siebel Server Traces a Lock

A lock is a handle that a server component uses to identify the server component that can access an object, such as a DX file that resides in the folder of the Transaction Processor. A lock on the tracing feature displays the reason why the lock is set or released for the server component. A lock in the trace file provides information than you can use to troubleshoot a problem to reduce the contention between critical server components for Remote and Replication Manager.

For example, assume there is a problem with the Transaction Processor. It might be locking an object, such as a DX file that resides in the docking folder but not releasing it. If you set the Log Level to 4 or 5, then the Siebel Server logs information about the lock in the Transaction Processor log file. This functionality applies to the Remote and Replication Manager server components on the headquarters or regional nodes. It is not available to the user. For more information, see *Overview of Siebel Replication Manager*.

Tracing and logging of locks for server components includes the following objects on the Siebel Server:

- Dobjinst.dbf
- DX files
- Inbox
- Outbox
- Visdata.dbf

To enable the tracing for these locks, you can use the predefined Siebel event tracing features. The trace level of the server component controls logging. It is not necessary to restart the Siebel Server. For help with reducing contention, see *Getting Help from Oracle*.

For more information, see *Naming Conventions for Log Files*.

Server Components That You Can Use with Tracing

You can use the following server components with tracing:

- Database Extract
- Generate New Database
- Parallel Database Extract

- Transaction Merger
- Transaction Processor
- Transaction Router
- Replication Agent
- Synchronization Manager

For more information, see *Server Component Parameters*.

Using Event Logging with Server Components

Event logs provide helpful information for diagnosing problems. For example, to log information for the Database Extract server component, you can enter the following command in the Server Manager command line interface:

```
change evtloglvl GenericLog=5, Trace=5, SQL=5, EVENT_GENERIC_PROFILE=5 for comp dbxtract

start task for comp dbxtract server server_name with Client=client_name, SQLFlags=2, TraceFlags=7
```

Configuring Logs on the Remote Client

This topic describes how to set the parameters that control logging on the remote client. It includes the following information:

- *Temporarily Setting Event Levels*
- *Setting the Event Level*

Temporarily Setting Event Levels

To modify the type of information that Siebel Remote collects, you can temporarily modify the SIEBEL_LOG_EVENTS environment variable.

To temporarily set event levels

1. Open a DOS window on the remote client computer.
2. Navigate to the `SIEBEL_CLIENT_ROOT\bin` folder.
3. Enter the following command:

   ```
   set SIEBEL_LOG_EVENTS=event_level
   ```

   For more information, see *Setting the Event Level*.
4. From the same DOS window you opened in Step 1, log in to the remote client.

   For example, enter the following command:

   ```
   siebel /u username /p password /c cfg /d local
   ```

   where:

   - username is the name of the user
   - password is the password assigned to the user

- cfg is the name and path to the configuration file
- local specifies the local database

For more information, see *Locating the Siebel Application Configuration File*.

Setting the Event Level

The value for the event level can be between 0 and 5. A higher level collects more detailed information and uses more disk space. If you use the default value of 1, then Siebel Remote collects the minimum amount of information in the trace file. To troubleshoot a problem, you can set the event level to 3 or higher. If you set the event level to a higher value, then make sure sufficient disk space is available.

Using Siebel Audit Trail with Siebel Remote

If your Siebel implementation includes Siebel Audit Trail, then you can view audit trail records for successfully synchronized remote client transactions and other audit trail records, provided that your computer is connected to the headquarters database or to a regional node that includes Siebel Audit Trail.

The headquarters database must audit all of the fields that regional nodes audit. A regional node is not required to audit all of the fields that the headquarters database audits.

If the following requirements are met, then the user who is using the remote client can view audit trail records while using the local database:

- Siebel Audit Trail must be functioning correctly on the Siebel Server that Siebel Remote uses to synchronize the remote client.
- The remote client must use a local Siebel runtime repository that was published while Siebel Audit Trail is enabled for the correct business components.
- To view the audit trail for an audited record, the user must possess visibility to this record.

For more information, see *Overview of Siebel Replication Manager* and *Siebel Applications Administration Guide* .

To use Siebel Audit Trail with Siebel Remote

1. Start a remote client that connects to the headquarters database or a regional node where Siebel Audit Trail is implemented.

   Do not use a remote client that connects to the local database of a remote client.
2. Navigate to the Audit Trail screen, and then the Audit Trail Items view.

   Alternatively, you can choose a screen for a business component that uses auditing. For example, you can navigate to the Assets screen, click an asset, and then choose the Audit Trail link.
3. Use a typical query to locate the record you must modify.

   The fields of the Audit Trail Items list display information about the transaction, as described in the following table.

Field	Description
Source	A value of Sync indicates an audit trail record that Siebel Remote created as the result of a transaction that it successfully synchronized.

Field	Description
Date	Displays the date and time that the original transaction occurred on the remote client.
Synchronization Date	Displays the date and time that Siebel Remote synchronized the transaction to the current server.

Viewing Reports

This topic describes how to view reports. It includes the following information:

- *Viewing Reports for Synchronization Sessions*
- *Viewing Administrative Status Reports*
- *Viewing Reports on the Remote Client*

Viewing Reports for Synchronization Sessions

Oracle provides a number of online reports that display information about Siebel Remote and Replication Manager components and system status. These reports allow you to do the following:

- Get information about the Siebel Remote server components and users.
- Monitor and manage deployment of Siebel Remote and Replication Manager.
- Improve support.
- Reduce administrative overhead.

This topic describes views you can access that provide information about the remote status.

Viewing the Remote Status View

The Remote Status view displays information about database updates that the Merger Friendly Notification system preference determines. This view includes the following applets:

- **Session Summary.** Displays synchronizations that occurred since Siebel Remote initialized the last local database.
- **Session Actions.** Displays information of the major actions of the synchronization session. There are typically five major actions.
- **Session Actions Details.** Displays details depending on the activities of the synchronization session.

Siebel Remote archives synchronization details on the local database. It does not store them on the server database:

- On the local computer, Siebel Remote displays details of the previous synchronization in the Remote Status view of the User Preferences screen.
- On the Siebel Server, Siebel Remote stores details only for the latest synchronization. It displays these details in views in the Administration - Siebel Remote screen.

For more details about system preferences that affect the way Siebel Remote manages database modifications, see *Process of Configuring System Preferences for the Siebel Server*.

To view the remote status view

1. In the remote client, navigate to the User Preferences screen, and then the Remote Status view.
2. Examine fields in the report, using descriptions from the following table.

Applet	Field	Description
Session Summary	Session Date	Timestamp of the beginning of the synchronization.
	Session Status	Result of the synchronization.
	Session Result Summary	Key summary information of the synchronization.
Session Actions	Item Name	Name of major action.
	Results Summary	Summary result of the action.
Session Actions Details	Item Type	Type of object, such as Account or Opportunity.
	Item Name	The name of the field.
	Action	The kind of conflict or action.
	Updated By	Self-explanatory.
	Date Updated	Self-explanatory.
	Item Details	Detailed information that describes the work that Siebel Remote completed.

Viewing the Current Siebel Remote Session Report

The Current Siebel Remote Session report provides the following kinds of information about the chosen session:

- List of actions completed during the session, such as connecting to server, sending database modifications, retrieving database modifications, or retrieving requested files.
- Description of each action completed, including quantities of transactions, operations, and files involved.
- Details for action items, where applicable.

This report is available only for the remote client.

To view the Current Siebel Remote Session report

1. In the remote client, navigate to the User Preferences screen, and then the Remote Status view.
2. In the Session Summary list, query the Session Date field for the session that you must view.
3. Click the Reports button.
4. Choose Current Siebel Remote Session.
5. Wait for the report to display, and then examine the results.

Viewing Administrative Status Reports

Several predefined administrative status reports are available from various views in the Administration - Siebel Remote screen. The reports provide the following types of information:

- Synchronization frequency
- Transaction backlog
- Transaction Processor usage
- Mobile users usage

These reports are accessible only to you except for the Client Status report. If the user responsibility includes the Client Status view, then the Client Status report is available to the remote client. For more information, see *Siebel Applications Administration Guide* .

To view administrative status reports

1. In the remote client, navigate to the Administration - Siebel Remote screen.

   For example, you might require reports from the Synchronization Sessions view.
2. Choose the view tab that contains the report you must view.

   For example, to view a report for synchronization sessions, choose the Synchronization Sessions view tab. For a list of views to choose, see *Predefined Administrative Reports*.
3. Click the Reports button, and then choose the required report.
4. Wait for the report to display, and then examine the results.

Viewing Reports on the Remote Client

This topic describes views you can use in the Administration - Siebel Remote screen to monitor the status and progress of remote clients. It includes the following information:

- *Using the Client Status View*
- *Using the Client Status Diagnostics View*
- *Using the Synchronization Sessions View*
- *Using the Upload Statistics View*
- *Using the Download Statistics View*

Using the Client Status View

The Client Status view displays the current status of remote clients, including the following information:

- The last time each remote client synchronized
- The product versions of each remote client
- The last time Siebel Remote extracted and initialized each remote client
- The amount of free disk space, in bytes

Siebel Remote updates the data in this screen at the start and end of each synchronization. It does not update this data in the following situations:

- During an initialization
  If the Free Disk (Bytes) field is reset to zero during a database extract.
- After applying modifications to the local database if these modifications are applied after data transfers are complete

In these situations, because the work occurs after the remote client disconnects from the Siebel Server, Siebel Remote does not update data in the status screen until the next synchronization. To help avoid running out of disk space on the local computer, the user can examine this information during this next synchronization.

To use the Client Status view

1. Log in to the Siebel Server with administrator privileges.
   For more information, see *Logging in to the Siebel Database as an Administrator*.
2. Navigate to the Administration - Siebel Remote screen, and then the Client Status view.
3. In the Mobile Clients/Replication Servers list, choose the remote client that you must monitor.
4. Examine the Siebel Remote Client Status form that displays details for the remote client that is currently chosen in the Mobile Clients/Replication Servers list.
   For more information, see the table in *Fields in the Siebel Remote Client Status Form*.

Using the Client Status View with Siebel Anywhere

The Product Version field describes the Siebel Anywhere Upgrade kit that the user applied. This information is typically one session behind the current state of the upgrade. When you are using Siebel Anywhere, Siebel CRM does not update the Product Version field with the version information until after the upgrade finishes, and then after the user finishes the next synchronization.

Using the Client Status Diagnostics View

The Client Status Diagnostics view provides data routing information about the processors, remote clients, and regional nodes.

To use the Client Status Diagnostics view

1. Log in to the Siebel Server with administrator privileges.
   For more information, see *Logging in to the Siebel Database as an Administrator*.
2. Navigate to the Administration - Siebel Remote screen, and then the Client Diagnostics view.
3. Examine information in the Client form and the detailed form for the remote client.
   For more information, see the table in *Fields in the Siebel Remote Client Diagnostics Form*.

Using the Synchronization Sessions View

The Synchronization Sessions view displays information about every user and the synchronization session for each user for a period of time. A systems administrator is the only person who can access this view.

To use the Synchronization Sessions view

1. Log in to the Siebel Server with administrator privileges.

   For more information, see *Logging in to the Siebel Database as an Administrator*.
2. Navigate to the Administration - Siebel Remote screen, and then the Synchronization Sessions view.
3. In the Synchronization Period form, choose the time frame for the period of time you must investigate.
4. In the Mobile Users list, choose the remote client that you must examine.
5. In the Synchronization Sessions list, run a query by entering values in the fields.
6. Examine details that Siebel Remote displays the Synchronization Sessions list.

   For more information, see the table in *Fields in the Synchronization Sessions List*.

Using the Upload Statistics View

To configure Siebel Remote to save transactions on the Siebel Server after the remote client synchronizes, you can use the Upload Statistics view. You can use this view to verify the last set of transactions that Siebel Remote sent from the remote client to the server, and the last transaction that it applied to the server. The Upload Statistics view displays information about transactions and file attachments that Siebel Remote creates, receives, or applies in the following ways:

- Created on each remote client
- Received on the Siebel Server
- Applied to the Siebel Server

To use the Upload Statistics view

1. Log in to the Siebel Server with administrator privileges.

   For more information, see *Logging in to the Siebel Database as an Administrator*.
2. Navigate to the Administration - Siebel Remote screen, and then the Upload Statistics view.
3. In the Mobile Clients/Replication Servers list, choose the remote client that you must monitor.
4. Examine the Siebel Remote Upload Statistics form that displays details for the remote client that is currently chosen in the Mobile Clients/Replication Servers list.

   For more information, see the table in *Fields in the Siebel Remote Upload Statistics Form*.

Using the Download Statistics View

The Download Statistics view displays information about transactions and file attachments that are created, received, or applied in the following ways:

- Created on the Siebel Server
- Received on the remote client
- Applied to the remote client

To use the Download Statistics view

1. Log in to the Siebel Server with administrator privileges.

For more information, see *Logging in to the Siebel Database as an Administrator*.

2. Navigate to the Administration - Siebel Remote screen, and then the Download Statistics view.
3. In the Mobile Clients/Replication Servers list, choose the remote client that you must monitor.
4. Examine the Siebel Remote Download Statistics form that displays details for the remote client that is currently chosen in the Mobile Clients/Replication Servers list.

   For more information, see the table in *Fields in the Siebel Remote Download Statistics Form*.

Displaying Local Time in the User Preferences Screen

If UTC is enabled, then some fields in the User Preferences screen use the GMT (Greenwich Mean Time) time zone to display time. Local time is the current time according to the local time zone on the remote client computer. To display local time in these fields, you must use Siebel Tools to modify the type property for each field, and then republish the Siebel runtime repository.

The following table describes the fields that display time in GMT if UTC is enabled.

View	Display Name of Field	Business Component	Business Component Field
Mobile User Summary View	Time of Last Sync Session	Sync Client Status Local	C.Sess.When
Dock Session Log	Session Date	Session Log	Created

To display local time in the user preferences screen

1. Log in to Siebel Tools.
2. In the Object Explorer, click the Business Component object type.
3. In the Business Components list, query the Name property for the following value:

   Sync Client Status Local
4. In the Object Explorer, expand the Business Component object type, and then choose Field.
5. In the Fields list, query the Name field for the following value:

   C.Sess.When
6. Set the Type property to DTYPE_UTCDATETIME.
7. Repeat Step 3 through Step 6 for the Created field of the Session Log business component.
8. Compile your modifications, and then test them in a development environment.
9. Upgrade your Remote implementation.

   For more information, see *Upgrading a Regional Node*.

9 Administering Siebel Remote

Administering Siebel Remote

This chapter describes administrative tasks for Siebel Remote. It includes the following topics:

- *Doing Basic Configuration and Administrative Tasks*
- *Process of Administering Siebel Remote*
- *Administering Server Components for Siebel Remote*
- *Managing Synchronization*
- *Administering the Remote Client*
- *Maintaining Siebel Remote*

Doing Basic Configuration and Administrative Tasks

This topic describes how to do basic configuration and administrative tasks. It includes the following information:

- *Logging in to the Siebel Database as an Administrator*
- *Logging in to the Local Database*
- *Making Advanced Server Parameters Visible*
- *Locating the Siebel Application Configuration File*
- *Locating the Record for a Server Component*

Logging in to the Siebel Database as an Administrator

This topic describes how to log in to the Siebel database as an administrator, using the Siebel Developer Web Client.

Logging in to the Siebel database as an administrator

1. From the Windows Start menu, choose Programs.
2. Choose the folder where you installed the Siebel application, such as Siebel17_home1, and then choose Siebel Web Client version, where version is the original installed version of Siebel CRM, such as 17.0.
3. In the Siebel Web Client program group, choose a Siebel application, such as Siebel Sales - ENU.

   The Siebel application starts and a splash screen displays that prompts you for log in information.
4. In the User ID and Password windows of the splash screen, enter log in information that provides administrator privileges, such as SADMIN.

   Administrator privileges provide access to administrative screens from the Site Map, such as the ability to manage server components, and so on.
5. In the Connect to window, choose Server, and then click OK.

Logging in to the Local Database

To log in to the local database, you can use Oracle SQL Developer or SQL*Plus.

Making Advanced Server Parameters Visible

To modify a setting for an advanced server parameter, you must make sure that the Show Advanced Objects parameter of the Server Manager server component is set to True. The Show Advanced Objects parameter controls whether or not advanced objects are visible when you click Advanced in the Component Parameters list of the server component. The following are some of the advanced objects you can modify that Siebel Remote uses:

- The Id Db Recreate parameter of the Transaction Router server component
- The Static Port Number parameter of the Synchronization Manager server component
- The Default Tasks parameter of the Replication Agent server component

To make advanced parameters visible

1. Locate the record for the Server Manager server component.

   For more information, see *Locating the Record for a Server Component*.
2. Click the Parameters tab and then query the Parameter field for Show Advanced Objects.
3. Set the Value field to True.
4. Restart the Siebel Server.

Locating the Siebel Application Configuration File

This topic describes how to locate the Siebel application configuration file. For more information, see *Modifying the Siebel Configuration File for Siebel Remote*.

To locate the Siebel application configuration file

1. Log in to the Siebel Server computer or the Mobile Web Client computer.
2. Open Windows explorer.
3. Navigate to the language folder.
   - On the Siebel Server, navigate to the `SIEBEL_ROOT\bin\language` directory.

     In this path, language is the language code, such as ENU.
   - On the remote client (Mobile Web Client), navigate to the root directory. For example, `C:\Siebel\Client\BIN\ENU`.
4. Locate the configuration file.

   For example, uagent.cfg or siebel.cfg.

Locating the Record for a Server Component

This topic describes how to locate the record of a server component on the Siebel Server or the Siebel Enterprise Server.

To locate the record for a server component on the Siebel Server

1. Log in to the Siebel Server with administrator privileges.

   For more information, see *Logging in to the Siebel Database as an Administrator*.
2. Navigate to the Administration - Server Configuration screen, and then the Servers view.
3. In the Siebel Servers list, query the Siebel Server field for the Siebel Server that you are configuring.
4. In the Components list, query the Component field for the server component that you must modify or examine.

   After you locate the record, you can use the Events list and the Parameters list to view events and parameters that are configured for the server component.

To locate the record for a server component on the Siebel Enterprise Server

1. Log in to the Siebel Server with administrator privileges.

   For more information, see *Logging in to the Siebel Database as an Administrator*.
2. Navigate to the Administration - Server Configuration screen, and then the Enterprises view.
3. In the Enterprise Servers list, query the Enterprise Server field for the Siebel Server that you are configuring.
4. In the Component Definition list, query the component field for the server component that you must modify or examine.

Process of Administering Siebel Remote

This process is a step in *Roadmap for Implementing Siebel Remote*.

To administer Siebel Remote, you do the following:

1. *Administering Server Components for Siebel Remote*
2. *Managing Synchronization*
3. *Administering the Remote Client*
4. *Maintaining Siebel Remote*

The order you use to do these steps vary according to your requirements.

Administering Server Components for Siebel Remote

This task is a step in *Process of Administering Siebel Remote*.

This topic describes how to administer server components that Siebel Remote uses.

Using the Administrative Interface to Administer Server Components

This topic describes how to use the administrative interface to administer server components for Siebel Remote. Components in the following component groups start automatically when you start the Siebel Server, where the component groups mentioned have been enabled:

- The Siebel Remote component group (alias Remote) includes server components that Siebel Remote requires. For a list of these components, see *Server Components That Siebel Remote Uses*.
- The Disconnected Mobile Synchronization component group (alias MobileSync) includes server components that Siebel Remote requires. For a list of these components, see *Server Components That Siebel Remote Uses*.

> **Note:** If the Status of the Transaction Router or Transaction Merger component is Enabled, then the component automatically starts one task when the Siebel Server starts. If the Status of the Transaction Processor component is Enabled, then the component automatically starts one task after the first DBXtract task has completed and you have restarted the server (unless you start the task manually). To examine the Status, you can navigate to the Components view of the Administration - Server Configuration, and then the Servers screen. If necessary, use Columns Displayed to expose the Status field. For more information, see *Siebel System Administration Guide* .

To use the administrative interface to administer server components

1. Make sure the Siebel Server is up and running.

   You cannot manually start the Transaction Processor, Transaction Router, or Transaction Merger server components through the GUI Server Manager unless the Siebel Server is running.
2. Optional. Turn on event logging.

   For more information, see *Using Event Logging with Server Components*.
3. Navigate to the Administration - Server Management screen, Servers, and then the Component Groups view.
4. In the Component Groups list, query the Name field for Siebel Remote or Disconnected Mobile Synchronization.
5. To determine the state of the server component you must administer, examine the following field in the Components list:

   State (Icon)

   The State (Icon) field indicates whether the component is Online, Paused, or Shutdown.
6. To administer the server component, click a button in the Components list.

   You can resume, pause, startup, or shutdown the server component. If you click Startup, then a new task for the server component starts.
7. Optional. Configure start-up parameters for the server component.

   For more information, see *Configuring Server Components for Synchronization and Transactions*.
8. To administer more server components, repeat Step 5 through Step 7 for each component.

Using the Command Line Interface to Administer Server Components

This topic describes how to use the Server Manager command line interface to administer server components. It includes the following information:

- *Opening the Command Line Interface for Server Manager*
- *Using the Command Line to Administer Server Components*
- *Using the Command Line to Stop or Start the Siebel Remote or Disconnected Mobile Synchronization Component Group*
- *Using the Command Line to Start a Task for a Server Component*
- *Using the Command Line to Start Multiple Tasks for a Server Component*

Some of the commands in this topic reference the alias for the server component. For a list of these aliases, see *Server Components That Siebel Remote Uses*.

Opening the Command Line Interface for Server Manager

To manage server components, you can use the Server Manager command line of the Server Manager. If you open a Server Manager command line, then make sure you indicate the Siebel Server name. If you do not, then the Server Manager is set to the Siebel Enterprise Server, by default. For more information, see *About the Siebel Enterprise and the Siebel Enterprise Server*.

To open the command line interface for Server Manager

1. On the Siebel Server, choose Start, and then choose Run.
2. Type `cmd` in the Open window, and then click OK.

   The command line interface opens.
3. At the command line prompt, type `srvrmgr server_name .`

   where:

   - server_name is the name of the Siebel Server where you must enter a command.

   The Server Manager command line opens, and displays as follows:

   ```
   srvrmgr server_name
   ```

Using the Command Line to Administer Server Components

To administer the Siebel Remote or MobileSync component group and individual server components, you can use the Server Manager command line.

To use the command line to administer server components

1. Open the Server Manager command line.

   For more information, see *Opening the Command Line Interface for Server Manager*.

2. Optional. Turn on event logging.

   For more information, see *Using Event Logging with Server Components*.
3. Navigate to the `SIEBEL_ROOT\bin` folder.
4. Enter the following command:

   ```
   srvrmgr /e enterprise_server_name /g gateway_server_name /u username /p password
   ```

   where:

   - username is the username of the Siebel administrator.
   - password is the password of the Siebel administrator.

   For more information, see *About the Siebel Enterprise and the Siebel Enterprise Server*.
5. From the Server Manager command line, enter the following commands:

   ```
   enable compgrp remote
   enable compgrp mobilesync
   ```

   These commands start the Siebel Remote and the MobileSync component groups. The applicable server components in these groups are described in *Server Components That Siebel Remote Uses*.
6. Optional. Start more tasks for individual server components.

   For more information, see *Using the Command Line to Start Multiple Tasks for a Server Component*.
7. Log in to the Siebel Server with administrator privileges.

   For more information, see *Logging in to the Siebel Database as an Administrator*.
8. Navigate to the Administration - Server Configuration screen, Enterprises, and then the Synchronize view.
9. Click Synchronize.

   For more information, see *About the Siebel Enterprise and the Siebel Enterprise Server*.

Using the Command Line to Stop or Start the Siebel Remote or Disconnected Mobile Synchronization Component Group

This topic describes how to use the command line to stop or start the Siebel Remote component group (alias Remote) or the Disconnected Mobile Synchronization component group (alias MobileSync).

To use the command line to stop or start the Siebel Remote or MobileSync component group

- To stop the Siebel Remote or MobileSync component group, from the Server Manager command line, enter one of the following commands:

  ```
  disable compgrp remote
  disable compgrp mobilesync
  ```

- To start the Siebel Remote or MobileSync component group for a Siebel Server, from the Server Manager command line, enter one of the following commands:

  ```
  enable compgrp remote for server server_name
  enable compgrp mobilesync for server server_name
  ```

This command enables the applicable component group only on some Siebel Servers in the Siebel Enterprise, rather than on every Siebel Server. For more information, see *About the Siebel Enterprise and the Siebel Enterprise Server*.

- To use the command line to start or stop an individual server component of the Siebel Remote or MobileSync component group, from the Server Manager command line, enter the following command:

```
command compdef component_alias_name
```

where:

- command is enable or disable. It starts or stops the server component.
- component_alias_name is the name of the alias for the server component.

You can use the comp or compdef command. For more information, see *Siebel System Administration Guide* .

Using the Command Line to Start a Task for a Server Component

You can use the Server Manager command line to start a task for a server component for Siebel Remote. To automatically start Synchronization Manager, the Siebel Server uses the default configuration. An explicit configuration is typically not required.

To use the command line to start a task for a server component

1. Open the Server Manager command line.
   For more information, see *Opening the Command Line Interface for Server Manager*.
2. To start a task for a server component, enter the following command in a single line:

```
start task for comp component_alias_name server server_name
 with parameter_1=value_1, parameter_2=value_2,...
```

   where:

   - component_alias_name is the name of the alias for the server component
   - server_name is the name of the Siebel Server where the server component runs
   - parameter_1 is a parameter of the server component
   - value_1 is the value for parameter_1

   For example:

```
start task for comp dbxtract server sdchs20n512 with client=regional_node_1, initmethod=ddl
```

   For more information, see *Server Component Parameters*.
3. To administer another server components, repeat Step 2.

Using the Command Line to Start Multiple Tasks for a Server Component

To start multiple tasks for a server component, you must use the start task command. For information about how many tasks to start for a server component, see *Options for Configuring the Siebel Server*.

To use the command line to start multiple tasks for a server component

- From the Server Manager command line, enter the following command:

  ```
  start task for comp component_alias_name
  ```

  where:

  - component_alias_name is the alias name of the server component

For information about:

- Event logging for server components that you can use with Siebel Remote, see *Monitoring and Logging for Siebel Remote*.
- Using Server Manager, see *Opening the Command Line Interface for Server Manager*.

Managing Synchronization

This task is a step in *Process of Administering Siebel Remote*.

This topic describes how to manage data synchronization. It includes the following information:

- *Determining How Frequently to Synchronize*
- *Optimizing Transaction Routing by Extracting All Remote Clients*
- *Sending a Message to a User During Synchronization*

Determining How Frequently to Synchronize

It is recommended that you develop guidelines for how frequently your users synchronize. Make sure you recommend an appropriate interval between synchronizations, taking into consideration the requirements and activities of your organization. You must also consider the frequency and schedule that you specify for the Transaction Router.

Initially, you might recommend that users synchronize one time a day. You can then use the factors described in this topic to evaluate your synchronization traffic and determine if your synchronization schedule must be refined.

To determine how frequently to synchronize

- Consider the connection time.

  Frequent synchronization reduces the number of transactions that Siebel Remote sends during a synchronization, and it reduces the connection time for this session. You can evaluate the difference in connection time and cost between the following items:

  - Less frequent but longer synchronizations
  - More frequent but shorter sessions

- Consider the disk space requirements.

  Frequent synchronization reduces the number of transactions that accumulate between sessions, and it reduces the amount of disk space required on the Siebel Server and the remote client. Evaluate the amount of disk space that is available and determine the trade off between increasing disk space and increasing synchronization frequency.

- Consider database volatility.

  Your synchronization schedule determines when Siebel Remote synchronizes modifications in the server database to the local databases. In an industry with high sales volatility, frequent synchronization can provide a significant advantage.

  The Transaction Router detects and routes database modifications to the remote client outbox for routing during the next synchronization. The operating status of the Transaction Router on each Siebel Server affects data availability for users. In a volatile environment, it be might necessary for you to run multiple Transaction Routers for each Siebel Server. You can also stop monitoring the Transaction Router.

- Consider user productivity.

  Frequent synchronization can affect user productivity. Consider the environment where the user operates and the convenience of completing a synchronization.

- Consider the Siebel Server connections.

  The ratio of remote clients to server connections influences your synchronization schedule. If the ratio is high, then it might be necessary for you to assign synchronization times to your users.

Optimizing Transaction Routing by Extracting All Remote Clients

A remote client that is extracted receives the latest transactions. It is not necessary for the routers to route transactions that were created before the extract started. For details regarding the synchronization process, see *How Siebel Remote Flows Data Through the Architecture* and *How Siebel Remote Synchronizes Local Databases*.

To optimize transaction routing by extracting all remote clients

- Extract all remote clients.

  Extracting all remote clients enables the Transaction Processor to delete transactions that Siebel Remote created before the extraction from the transaction log.

Sending a Message to a User During Synchronization

The message-of-the-day feature allows you to send a message to a user. When a user synchronizes with the Siebel Server, the remote client displays the message of the day to the user each time docking occurs.

To send a message to a user during synchronization

- Place the motd.txt file in the `siebsrvr\admin` folder.

  For example, if the Siebel Server is installed in the `c:\siebel\ses` folder, then place the motd.txt file in the following folder:

  ```
  C:\siebel\ses\siebsrvr\admin
  ```

  The user will see the message the next time the user synchronizes.

Administering the Remote Client

This task is a step in *Process of Administering Siebel Remote*.

This topic describes how to administer the remote client. It includes the following information:

- *Adding a New Remote Client*
- *Deactivating a Remote Client*
- *Reactivating a Remote Client*
- *Deleting a Remote Client*
- *Resetting the Password of a Remote Client*
- *Refreshing the Local Database of a Remote Client*
- *Moving Remote Clients to a Different Siebel Server*
- *Modifying the Routing Model for a Remote Client*

For information about logging on to the remote client, see *Viewing Reports on the Remote Client*.

Adding a New Remote Client

This topic describes how to add a new remote client.

To add a new remote client

1. Create and register a remote client.

   For more information, see *Configuring the Remote Client to Automatically Synchronize*.
2. Do a database extract for the new remote client.

   For more information, see *Extracting the Server Database*.
3. Initialize the local database for the remote client.

   For more information, see *Initializing the Local Database*.

Deactivating a Remote Client

This topic describes how to deactivate a remote client.

To deactivate a remote client

1. Locate the record for the remote client.

   For more information, see *Locating the Record of a Remote Client*.
2. In the End Date field, set a new effective end date that is the current date or an earlier date.

   This step configures the Transaction Router, Transaction Merger, and Synchronization Manager server components to stop processing requests for the remote client. For more information, see *Deactivating a Large Number of Remote Clients*.
3. Click Menu, and then click Save Record.
4. Delete the docking folder for the remote client from the Siebel Remote folder on the Siebel Server.

   This step prevents the user from starting a synchronization with the Siebel Server. The docking folder is located in the `SIEBEL_ROOT\Docking` folder of the Siebel Server. For more information, see *Server Folders That Siebel Remote Uses for Remote Clients*.
5. To clear out any cached user information, stop the Transaction Processor and any Transaction Router tasks that are running.

Deactivating a Large Number of Remote Clients

You can stop the Transaction Processor and Transaction Router before you deactivate a large number of remote clients.

> **CAUTION:** It is recommended that you stop the Transaction Processor and Transaction Router before you deactivate a large number of remote clients. If a large number of remote clients are end dated, and if the Transaction Processor and Transaction Router are still running, then a very large backlog might result in the `docking\txnproc` folder.

Reactivating a Remote Client

This topic describes how to reactivate remote clients.

To reactivate a remote client

1. Locate the record for the remote client.

   For more information, see *Locating the Record of a Remote Client*.
2. Clear the End Date field so that it does not contain a date.
3. Click Menu, and then click Save Record.
4. Reextract and reinitialize the remote client.

   Even if the date is in the future when you clear the End Date, it is still necessary to reextract and reinitialize.

Locating the Record of a Remote Client

This topic describes how to locate the record of a remote client in the Mobile Clients view.

1. Log in to the Siebel Server with administrator privileges.

   For more information, see *Logging in to the Siebel Database as an Administrator*.
2. Navigate to the Administration - Siebel Remote screen, and then the Mobile Clients view.
3. In the Parent Server form, locate the Siebel Server where the remote client connects.
4. In the Mobile Clients list, query the Mobile Client field for the remote client you must administer.

Deleting a Remote Client

This topic describes how to delete a remote client.

To delete a remote client

1. Deactivate the remote client.

   For more information, see *Deactivating a Remote Client*.
2. Shut down the server components of the Siebel Enterprise Server.

   If the server components of the Siebel Enterprise Server must be kept running, then wait several hours to make sure Siebel Remote updates these components. Before you delete a remote client, you must make sure the user status of the remote client is updated across the server components of the Siebel Enterprise. For more information, see *About the Siebel Enterprise and the Siebel Enterprise Server*.
3. Make sure the remote client record that you deactivated in Step 1 is still chosen.
4. Click Menu, and then choose the Delete Record menu item.
5. Repeat Step 1 through Step 4 for each remote client you must delete.

Resetting the Password of a Remote Client

If the user forgets the user password, or if the user is locked out of the Siebel application due to too many unsuccessful login attempts, then you can reset the remote client password.

To reset the password of a remote client

1. Locate the record for the remote client.

   For more information, see *Locating the Record of a Remote Client*.
2. To display the Preferences dialog box, in the Additional Information field, click the select icon.
3. In the Preferences dialog box, click Query, leave all fields empty, and then click Go to display a list of settings.
4. Note the value that displays for the SECADMIN password.

   You will use this value later in this procedure.
5. Access the remote client.

   You can use collaborative software, such as NetMeeting. You can also physically log in to the remote client.
6. Start the remote client.

7. Log in to the Local database as the SECADMIN user, using the password that you noted in Step 4.

   Siebel Remote displays the Reset Password dialog box. The password automatically resets when you use the SECADMIN password to log in. If the remote client is not connected to the network, then Siebel Remote does not send the password to the Siebel Server until the next successful synchronization. For more information, see *Logging in to the Local Database*.
8. In the Reset Password dialog box, enter the User ID and a new password for the remote client, and then click OK.

   A message displays to inform you that the password is successfully reset. The user can now use the new password to log in. For more information, see *Restoring Password Reset Privileges*.

Restoring Password Reset Privileges

If the user incorrectly enters the SECADMIN password on three consecutive attempts, then Siebel Remote suspends the password reset privileges of the SECADMIN account. This topic describes how to restore the password setting privileges. Siebel Remote does not reset the SECADMIN password during this procedure.

To restore password reset privileges

1. Locate the record for the remote client.

   For more information, see *Locating the Record of a Remote Client*.
2. Make sure the Enable Password Reset check box contains a check mark, and then save the record.
3. Make sure the remote client is connected to the Siebel Server that Siebel Remote typically uses to synchronize this client.
4. Start the remote client.
5. Log in as SECADMIN:

   a. When prompted to reset the user password, click Yes.
   b. In the Synchronization Credentials dialog box, supply your User ID, synchronization password, and remote client node name.
   c. Click OK.

      The Password Reset dialog box displays.
   d. In the Password Reset dialog box, supply a new password for the remote client, and then click OK.

      The user can now use the new password to log in.

Refreshing the Local Database of a Remote Client

Occasionally, it might be necessary for you to refresh the local database for a remote client. For example, if you modify a system preference parameter on the Siebel Server, then you must do a refresh or reextract to make sure Siebel Remote uses the new settings. For more information, see *Process of Configuring System Preferences for the Siebel Server*.

To refresh the local database of a remote client

1. If transactions are ready for loading to the remote client, then inform the user to synchronize.
2. Make sure Transaction Merger successfully applied transactions to the server database.

   To determine when transactions from a remote client are processed, you can do any of the following:

- To determine if Transaction Merger successfully applied transactions for the remote client, use the Server Manager or the Siebel Client Status screen.
- Examine the inbox folder of the remote client on the Siebel Server. There must not be any files that contain the .dx extension in the inbox folder.

3. Run Database Extract for the remote client.

   Make sure the Save Transactions parameter is TRUE.

   For more information, see *Extracting the Server Database*.
4. Notify the user to reinitialize the local database on the remote client.

   For more information, see *Initializing the Local Database*.

Moving Remote Clients to a Different Siebel Server

You can move one or more remote clients from one server to another server without reextracting the user or restarting server. Moving a remote client from one server to another server occurs in the same enterprise server.

To move a remote client, you do the following:

- Run the movehelper.exe utility on the source server. This Siebel Server currently serves the remote client.
- Run the nodemove.exe utility on the target server. This Siebel Server serves the remote client after you finish the move.

These utilities move the following types of information:

- Attributes of the remote client
- Docking status of the remote client
- Files and folders that exist in the docking folder for the remote client

To move remote clients to a different Siebel Server

1. Initialize the remote client with the source server.
2. Shut down the transaction processor on the source server and enable the transaction router to route all DX files.

   Shutting down the source transaction processor makes sure that the destination transaction processor or node is synchronized with the remote client node. If this node and client are not synchronized, then you might encounter an error that is similar to the following:

   ```
   Warning: can't move nodes because the node's last routed transactions cannot be found in current txnproc
    dx files.
   ```
3. Make sure the destination server and the source server reference the same Siebel Gateway and use the same Siebel database.
4. Start the destination server with the Remote and MobileSync component groups running.
5. Open a command window on the source server.
6. Navigate to the `SIEBEL_ROOT/bin` folder.

   where:

   - `SIEBEL_ROOT` is the root folder of your Siebel Server installation
7. Run the movehelper.exe utility using values from the following table.

Parameter	Description
N node_name	The name of the remote client that you are moving.
@file_name	Optional. If you must move multiple remote clients between two servers, then use the @file_name parameter instead of the node_name parameter. where: o file_name is the name of a text file that contains a list of clients to move. Each line in the text file must include only the name of a single remote client.
W option	Optional. You can set the option for the W parameter to Y or N. You use Y to instruct the Movehelper utility to wait for other processes to release their locks on the relevant folders before proceeding. This parameter is set to the following value, by default: not used This value configures the Movehelper utility to exit if another process locked the relevant folders. It exits with a message that indicates that the remote client is processing another component.
M option	Required. You can set the option for the M parameter to P or C. You can choose one of the following: o To prepare to move one or more remote clients between two servers, use M P. o To cancel a move that is already in progress, use M C. The specified client or clients return to full functionality on the source server.

For more information, see *Example Movehelper Commands*.

8. Open a command window on the target server.
9. Navigate to the `SIEBEL_ROOT/bin` folder.
10. Make sure the destination server can access the file system of the source server.
11. Run the nodemove.exe utility using values from the following table.

Parameter	Description
C odbc_data_source	ODBC data source of the source server.
D tableowner	Owner of the S_NODE table in the server database.
U username	User name of the Siebel administrator on the source server.
P password	Password of the Siebel administrator that you specify for the username parameter.

Parameter	Description
n node_name	Name of the remote client that you are moving.
@file_name	Optional. To move multiple remote clients between two servers, use the @file_name parameter instead of the /N node_name parameter. where: o file_name is the name of a text file that contains a list of clients to move. Each line in the text file must include only the name of a single remote client.
A target_server_name	The name of the Siebel Server where you are running nodemove and that Siebel Remote uses to communicate with the remote client.
S source_docking_folder	The path to the folder on the source server that holds the docking folders for the remote clients.

For more information, see *Example Nodemove Commands*.

12. Use a text editor to open the configuration file on the remote client.

    For more information, see *Locating the Siebel Application Configuration File*.
13. To specify how the remote client connects to the new server, modify the value of the DockConnString parameter.
14. Repeat Step 5 through Step 13 for each combination of source server and target server.

    This procedure assumes that the same source server serves all the remote clients that you must move, and that you must move all these clients to the same target server. If this situation is not true, then you must repeat this procedure for each combination of source server and target server.

Example Movehelper Commands

The following example commands for the Movehelper utility renames the docking folders for the specified users to names of the format node_name_MOVING:

```
movehelper /N jsmith /W Y /M P
movehelper @d:\tmp\mwcs_to_move.txt /W Y /M P
movehelper /N jsmith /M C (for canceling a move that is already in progress)
```

Example Nodemove Commands

The following example commands for the Nodemove utility copies the docking folder of the node from the source server to the destination server, and then redirects the node to communicate with the destination server for future synchronizations:

```
nodemove /C Siebel /D SADMIN /U username /p password /n jsmith /A Siebel2 /S SIEBEL_ROOT\DOCKING
nodemove /C Siebel /D SADMIN /U username /p password @d:\tmp\mwcs_to_move.txt /A Siebel2 /
S SIEBEL_ROOT\DOCKING
```

Reversing the Outcome of a Nodemove Operation

The Nodemove utility does not provide cancel or roll back functionality. This topic describes how to reverse the outcome of a Nodemove utility.

To reverse the outcome of a nodemove operation

1. Allow the nodemove operation to successfully finish.
2. Run a new nodemove operation.

   This new operation copies the docking folder of the node back to the source server and redirects the node to use this source server for future transactions.

Modifying the Routing Model for a Remote Client

This topic describes how to modify the routing model for a remote client.

To modify the routing model for a remote client

1. Instruct the user to synchronize with the Siebel Server and not to make any local database modifications until after the next synchronization.
2. Locate the record for the remote client.

   For more information, see *Locating the Record of a Remote Client*.
3. Modify the Routing Model field, as necessary.

   For more information, see *Controlling the Data That Siebel Remote Routes to Clients*.
4. Step off the record to save your modifications.
5. Make sure the user responsibilities do not provide access to views that contain data that the new Routing Model does not route.

   A routing model is not related to a responsibility.
6. Do a database extract.

   For more information, see *Extracting the Server Database*.
7. Notify the user to synchronize again.

   The user can download the new extract at the beginning of the synchronization, and then resume operation. This procedure reinitializes the local database. For more information, see *Initializing the Local Database*.

Maintaining Siebel Remote

This task is a step in *Process of Administering Siebel Remote*.

This topic describes some of the management activities you can periodically do to keep your implementation of Siebel Remote running efficiently.

To maintain Siebel Remote

- Keep organization information current.

  For more information, see *How Positions, Organizations, and Responsibilities Affect Access*.
- Clean the cache.

  For more information, see *Cleaning the Cache of the Dispatch Board*.

Cleaning the Cache of the Dispatch Board

You might notice significant activity in the S_DSP_BRD_LOG table (Dispatch Board Log) that the dispatch board cache uses. Siebel Remote uses this cache to help meet the performance requirements of the dispatch board. It is recommended that you do not modify the S_DSP_BRD_LOG table or directly modify how Siebel Remote uses it. To clean up this table, you can periodically use the FS Activity Cache business service. To have this work done automatically, you can configure a repeating server component job. For more information, see *Siebel Field Service Guide* .

To clean the cache of the dispatch board

1. Log in to the Siebel Server with administrator privileges.

   For more information, see *Logging in to the Siebel Database as an Administrator*.
2. Navigate to the Administration - Business Service screen, and then the Simulator view.
3. In the Simulator list, create a new record.
4. In the Service Name field, click the select icon, and then choose FS Activity Cache.

   The display name for this service is Field Service Activity Cache Service.
5. In the Method Name field, click the select icon, and then choose CleanUpCacheTable.
6. Click Run.

   The business service method runs. It clears the data from the cache table of the Dispatch Board.

10 About Siebel Replication Manager

About Siebel Replication Manager

This chapter describes Oracle's Siebel Replication Manager. It includes the following topics:

- *Overview of Siebel Replication Manager*

Overview of Siebel Replication Manager

This topic describes Replication Manager. It includes the following information:

- *Hierarchy of a Siebel Replication Manager Implementation*
- *How Siebel Replication Manager Uses Routing Groups*
- *Server Components That Siebel Replication Manager Uses*
- *Support for Siebel Server Features on a Regional Node*
- *How Siebel Replication Manager Filters a Regional Workflow*

For more information, see *About the Siebel Enterprise and the Siebel Enterprise Server*.

Hierarchy of a Siebel Replication Manager Implementation

Replication Manager is a data replication technology that copies data throughout a network of Siebel nodes. It copies data that originates in the headquarters node (HQ) to multiple regional nodes. These regional nodes are subordinate to the headquarters node. It uses a hierarchical model.

A Replication Manager implementation includes a single headquarters node and one or more regional nodes. The headquarters node contains the master set of data that the regional nodes use. A regional node can possess one of the following types of relationships:

- **Subordinate to the headquarters node.** The regional node synchronizes directly with the headquarters node.
- **Subordinate to a regional node.** The regional node synchronizes directly with this regional node. A *hierarchy of regional nodes* is a hierarchy that includes a regional node that is a child node of another regional node.

Each subordinate node is a Siebel Enterprise Server that contains a subset of users from the Siebel Enterprise Server that resides on the parent node.

The following diagram illustrates an example configuration for Siebel Replication Manager. It includes the following items:

- Two regional nodes that are children of the headquarters node.
- One regional node that is a child node of a regional node.

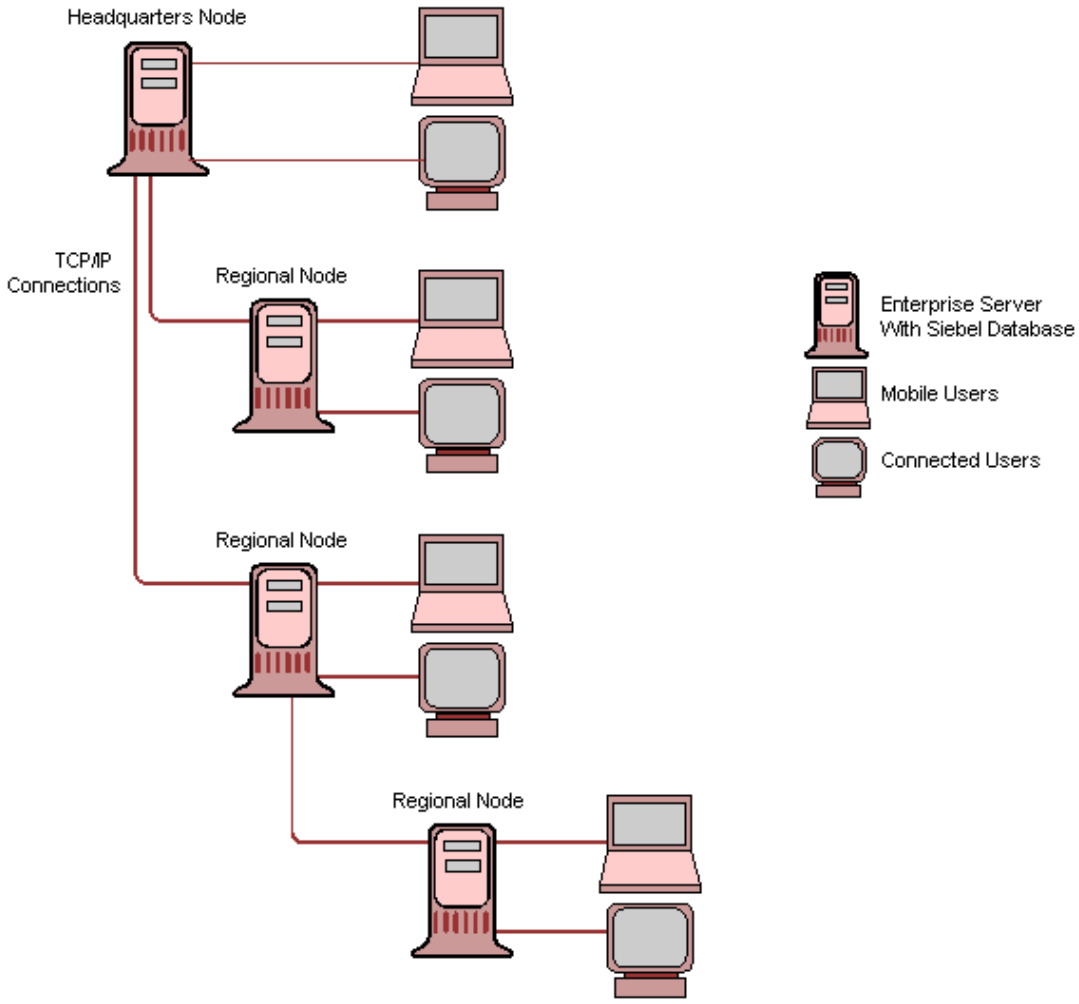

Headquarters Node

A *headquarters node* is a separate Siebel Enterprise Server that includes the Siebel database, the Siebel File System, and one or more Siebel Servers. The Siebel database and file system contain the entire set of database records and file attachments that the nodes use. Siebel Servers that reside in the headquarters node manage replication to the following items:

- Regional nodes that are children of the headquarters node
- Remote clients that synchronize with the headquarters node

A regional node can support connected users and remote clients that synchronize with the Siebel Server of a regional node.

For more information, see *About the Siebel Enterprise and the Siebel Enterprise Server*.

Regional Node

A *regional node* is a separate Siebel Enterprise Server that includes a Siebel database, Siebel Servers, and Siebel File System that support a set of connected users. The set of registered users at the regional node determines the set of connected users.

Each regional node is a child of a parent node. A *parent node* is another Siebel Enterprise Server that is the headquarters node or another regional node. A regional node contains a full copy of data or a subset of data from the parent node. This copy includes database records and file attachments. A regional node is typically geographically separated from the headquarters node, but this configuration is not required.

Replication Agent

The Replication Agent server component runs on the Siebel Server on the regional node. To keep data current at these locations, it periodically synchronizes the regional database with the parent database. Replication Agent runs as a *service mode task*, which is a type of task that runs continuously after it starts.

Benefits of Siebel Replication Manager

Replication Manager can help solve the performance degradation that occurs if bandwidth is limited or if network latency is a problem. Placing data closer to a cluster of connected users instead of requiring data transfer from a single headquarters node can improve response time. This configuration also provides the user with continuous access to the Siebel application even if the network link to the headquarters node is not reliable or is only available intermittently. The user can synchronize with a local regional node to decrease network costs and to improve the performance and reliability of the synchronization process.

Comparison Between Siebel Remote and Siebel Replication Manager

The following table provides a comparison between Siebel Remote and Siebel Replication Manager.

Siebel Remote	Siebel Replication Manager
Siebel Remote provides the following: • Supports data synchronization with remote clients • Provides an extension of the Siebel database and file system for each user • Provides access to local data while the remote client is disconnected from the Siebel Server • Requires the user to periodically synchronize local data with the Siebel database	Siebel Replication Manager provides the following: • Uses the same architecture as Siebel Remote • Uses a hierarchy of nodes that is different from Siebel Remote • Supports server-based data replication in a hierarchical set of Siebel Enterprise Servers • Supports multiple users in each replicated node • Synchronizes data between the parent node and the subordinate nodes of the parent

How Siebel Replication Manager Uses Routing Groups

A routing group is associated with each Siebel Server of a regional node. It does the following:

- Determines the data that Replication Manager extracts and the transactions that it synchronizes with the Siebel Server of a regional node.
- Determines how much of the data from the parent node Replication Manager copies to the regional database.

You cannot modify a routing group.

Each regional node contains a full copy of the Siebel database in the parent node and file system, or a subset of that data. To specify the routing group that the Replication Manager uses, you can associate one of the following routing groups with the regional database:

- *About the Regional Server - Full Copy Routing Group*
- *About the Regional Server - Standard Routing Group*

To specify a routing group, you use the Administration - Siebel Remote screen when you register the regional node.

For more information about the following items:

- Registering a regional node, see *Defining the Regional Node*.
- Routing, see *Controlling the Data That Siebel Remote Routes to Clients*.
- Predefined user routing rules, see *Transaction Router Server Component*.

About the Regional Server - Full Copy Routing Group

The Regional Server - Full Copy routing group copies all nonsystem data, including all user data, from the parent database to the regional database. Full Copy disregards routing rules. It considers the regional database as a full copy of the parent database. You must not use Full Copy as a backup system for the headquarters node for the following reasons:

- The Full Copy routing group might note copy some data that is related to Siebel CRM data.
- If you cannot restore the parent node properly, then it might be necessary to reextract a regional node.
- The Full Copy routing group does not copy every user.
- You cannot convert a regional node to a headquarters node.

CAUTION: If the headquarters node encounters a serious error or is not available, then you cannot use the Regional Server - Full Copy routing group to establish a new headquarters node.

About the Regional Server - Standard Routing Group

The Regional Server - Standard routing group uses routing rules to identity the data to copy to the regional database. The data that it copies to the regional database is the data that is visible to connected users who you assign to the regional node. It applies predefined routing rules to determine the data that the Replication Manager parent node copies to the regional node.

Advantages and Disadvantages of Full Copy and Standard Routing Groups

The following table describes advantages and disadvantages of the Regional Server - Full Copy routing group and the Regional Server - Standard routing group. Note the following:

- If Replication Manager routes more than half of the data on the parent node to the regional node, then it might be more beneficial to use Full Copy rather than Standard for optimal performance.
- Replication Manager supports All views, such as All Opportunities Across Organizations, only on a regional node that is assigned the Regional Server - Full Copy routing group.

Routing Group	Advantages	Disadvantages
Regional Server - Full Copy	Quick data routing because Replication Manager does not use a routing rule.	Replication Manager stores more data at the regional node.

Routing Group	Advantages	Disadvantages
	Full access to data for every user.	More network traffic.
	Not applicable.	Requires more powerful hardware.
Regional Server - Standard	Replication Manager routes only necessary data.	The Transaction Router must determine the data that the Replication Manager must route, which increases processing time.
	Replication Manager stores less data at the regional node, which requires fewer resources.	Not applicable.
	Less network traffic.	Not applicable.

Assignment to Multiple Databases

If you assign a user to multiple databases, then Replication Manager synchronizes the data that user can view to each of these databases. If you assign a user to only one database, then this database is a headquarters database or a regional database. An example of a user whom you assign to multiple databases might include assignment to one headquarters database or regional database and one Siebel Remote database.

Server Components That Siebel Replication Manager Uses

This topic describes the server components that Replication Manager uses. For more information, see the following topics:

- *Server Components That Siebel Remote Uses*
- *Administering Server Components for Siebel Remote*
- *Options for Configuring the Siebel Server*

Server Component Usage on Headquarters and Regional Nodes

The server components that Replication Manager uses on the headquarters node include the components listed in the table in the topic *Server Components That Siebel Remote Uses*, except for the Replication Agent server component.

The table in the topic *Server Components That Siebel Remote Uses* lists the server components that Replication Manager uses on the Siebel Server in the regional node if that regional node includes remote clients or child regional nodes. In this situation, Replication Manager also uses the Regional Database Initialization (srvrinit) server component.

If a regional node does not contain remote clients or child regional nodes, then Replication Manager uses the following server components on the Siebel Server in the regional node:

- **Regional Database Initialization (srvrinit).** A server component that loads Database Extract onto the Siebel Server of a regional node.
- **Replication Agent.** A server component that copies the Siebel database to a regional node, according to the assigned routing group.

Support for Siebel Server Features on a Regional Node

Most Siebel Server processes run only on the Siebel Server of the headquarters node. Some Siebel Server features and server components do run on the regional node. For more information, see *Siebel Server Features on a Regional Node*.

How Siebel Replication Manager Filters a Regional Workflow

Workflow administration allows for filtering out a workflow process that only applies at the regional level. Replication Manager routes to the regional node only the records that are associated with workflows that the remote client requires. This configuration decreases the amount of data and helps optimize the local database. For more information, see *Siebel Business Process Framework: Workflow Guide* .

11 Implementing Siebel Replication Manager

Implementing Replication Manager

This chapter describes how to implement Replication Manager. It includes the following topics:

- *Process of Implementing Siebel Replication Manager*
- *Installing Servers and File Systems on the Headquarters Node*
- *Installing Servers and File Systems on the Regional Node*
- *Defining the Regional Node*
- *Extracting the Regional Database*
- *Initializing the Regional Database*
- *Configuring the Regional Node to Support Remote Clients*
- *Configuring the Replication Agent Server Component*
- *Installing Another Siebel Server on the Regional Node*

Process of Implementing Siebel Replication Manager

This process is a step in *Roadmap for Implementing Siebel Remote*.

To implement Replication Manager, you do the following:

1. *Installing Servers and File Systems on the Headquarters Node*
2. *Installing Servers and File Systems on the Regional Node*
3. *Defining the Regional Node*
4. *Extracting the Regional Database*
5. *Initializing the Regional Database*
6. *Configuring the Regional Node to Support Remote Clients*
7. *Configuring the Replication Agent Server Component*
8. *Installing Another Siebel Server on the Regional Node*

For more information, see *About the Siebel Enterprise and the Siebel Enterprise Server*.

Installing Servers and File Systems on the Headquarters Node

To implement Replication Manager, you begin by installing servers and file systems on the headquarters (HQ) node.

To install servers and file systems on the headquarters node

- Install and test the following on the headquarters node:

- Siebel Server
- Database Configuration Utilities
- Siebel database
- Siebel File System

For more information, see the *Siebel Installation Guide* .

CAUTION: Do not delete the Siebel Server of the headquarters node under any circumstances.

If you use the Administration - Replication Server view, then you must not delete the Siebel Server of the headquarters node. If you delete the Siebel Server of the headquarters node, then the following occurs:

- The processes abort.
- You must restore the Siebel Server that you deleted, from a backup, or you must run SQL to rebuild the record for the Siebel Server of the headquarters node and the remote clients.

Installing Servers and File Systems on the Regional Node

To install the regional node, you must configure a new Siebel Enterprise Server on the regional node that contains a name that is different from the name that the headquarters node uses. For more information, see *About the Siebel Enterprise and the Siebel Enterprise Server*.

To install servers and file systems on the regional node

1. Install the Siebel Gateway.

   For more information, see the following items:

   - *Requirements for Connectivity with the Siebel Gateway*
   - *Siebel Installation Guide*
   - *Siebel System Administration Guide*
2. Install the ODBC driver that the RDBMS vendor uses for your implementation.

   For more information, see *Requirements for the ODBC Driver*.
3. Install the Siebel Server and the Database Configuration Utilities.
4. Start the Database Configuration Wizard and install the Siebel database.

   Note: Installing the Siebel database on the regional node is very different from installing it on the headquarters node. For more information, see *Installing the Database Configuration Utilities and the Regional Siebel Database on the Regional Node*. See also the *Siebel Installation Guide* .

5. Start the Siebel Management Console and configure your Siebel installations.

   As the Siebel Management Console prompts you, specify valid connectivity information for all of the components in your regional Siebel environment. Each regional node must be associated with a unique Siebel Enterprise Server name. For more information, see *Requirements for Installing the Siebel Server on the Regional Node*. See also the *Siebel Installation Guide* .
6. Create the Siebel File System.

   For more information, see *Creating the Siebel File System on the Regional Node*.

For more information on installing these components, see the Siebel Server installation guide for your operating system.

Requirements for Connectivity with the Siebel Gateway

You must install and make sure the Siebel Gateway is running before you install the regional node. The Siebel Gateway includes a persistent store that includes configuration parameters and run-time information. Each Siebel Server accesses the Siebel Gateway at start up and periodically while the Siebel Server runs. A reliable network connection to the Siebel Gateway must exist. It is strongly recommended that you install a Siebel Gateway that is local to your regional node.

Requirements for the ODBC Driver

If your implementation uses Oracle Database, then it is not necessary to install an ODBC driver. For other supported RDBMS vendors, you must install an ODBC driver.

> **Note:** Platform, database, and other certifications for Siebel are found on My Oracle Support. For help searching for certifications, see *How to Check the Certification Matrix in the New My Oracle Support Site* (KB871388).

Requirements for Installing the Siebel Server on the Regional Node

Note the following requirements for installing a Siebel Server on the regional node:

- Each regional node must contain at least one Siebel Server that synchronizes the regional node with the parent node. This Siebel Server might also support users. Your implementation might require more Siebel Servers, depending on the number of users and applications.
- The Siebel Server on the regional node can be at the same version and installed on the same operating system as the parent server. For example, if you run the headquarters node on Windows 2016, then the regional node can use Windows 2016.
- In a heterogeneous server environment, the Siebel Server and the Siebel database that you install on the regional node can be deployed to a different operating system. The version and patching level of the Siebel database that you install on the regional node must be the same as the version and patching level of the Siebel database that you install on the headquarters node.

- The Siebel databases on the headquarters node and the regional node must use the same RDBMS. For example, if the RDBMS in the headquarters node is Oracle Database, then the RDBMS on the regional node must also be Oracle Database.
- The regional database can be on the same computer or on a separate computer in the same regional location, according to the following requirements:
  - The number of users
  - The number of connected Siebel Web Clients
  - Database sizing requirements
  - Computer performance requirements
- It is recommended that you set the NLS_LANG environment variable to the same value for the headquarters node and for the regional nodes. This configuration makes sure that the language environments of the Siebel database and the client application are the same. The NLS_LANG variable sets the language and territory environment that the server session uses and the client application. The language and territory sections of the NLS_LANG variable determine the default values for other parameters, such as date format, numeric characters, and linguistic sorting. For more information, see the *Siebel Installation Guide* .

For more information about the Siebel Enterprise Server, see *About the Siebel Enterprise and the Siebel Enterprise Server*.

Installing the Database Configuration Utilities and the Regional Siebel Database on the Regional Node

You can install the Database Configuration Utilities and the regional Siebel database on the regional node. The Database Configuration Utilities is a set of utilities that you install when you install a Siebel Server, using the Siebel Enterprise Server installer. When you install the Siebel database on the RDBMS, you access these files when you run the Database Configuration Wizard and the Siebel Upgrade Wizard. For more information about these tasks, see the *Siebel Installation Guide* .

To install the Database Configuration Utilities on the regional node

1. Have an Oracle database administrator set storage parameters.
   The Regional Database Initialization program uses the default storage parameters for the data and index tablespaces. For larger tables, you can modify the storage parameters after you create the tables.
2. Install the RDBMS software on the regional Siebel Server.
   To create an empty database that contains adequate space for data and index storage, you must install the RDBMS software. Do this in accordance with the documentation of the RDBMS vendor and the guidelines for configuration and space allocation.
3. Create the Siebel database accounts for the Siebel Table Owner and Siebel Administrator, and then grant them the necessary privileges.
   To create these users and to grant their privileges, you can use the application RDBMS tool. For example:
   - For an Oracle Database, you can grant connect, resource, and database administrator privileges for each account.
   - For Microsoft SQL Server, you can grant the Table Owner Security Administrator privilege on regional nodes.

- For IBM DB2, you can grant the Table Owner database administrator privilege.

  For more information, see *Implementing Srvrinit on the Regional Node*.

Implementing Srvrinit on the Regional Node

To successfully implement srvrinit on an Oracle Database regional node, the table owner must possess the required privileges. You can grant these privileges without granting database administrator privileges to the table owner. This topic describes how to enable srvrinit to work in Oracle Database without granting database administrator privileges to the table owner.

To implement srvrinit on the regional node

1. Start SQL*Plus.
2. Log in as the system user, sys, or a database administrator user.
3. Run the following command:

```
grant sse_role, connect, alter user, create user, create table, create session to table owner with admin
 option
```

   If you only grant sse_role, then SQL*Plus displays an error message.

Options for Installing the Siebel Database on the Regional Node

For a regional node that supports a smaller number of remote or connected users, you can install the Siebel database on the regional node on the same physical server that supports the Siebel Server on the regional node. You must use the same version on the regional Siebel Server and on the parent of the regional Siebel Server.

Creating the Siebel File System on the Regional Node

Each regional node requires a local Siebel File System. If Replication Manager replicates the data rows that exist in file attachments in Siebel File Systems, then it copies these file attachments to Siebel File Systems on the regional nodes.

The File System Manager (FSM) server component manages the file system and handles requests for files that reside in the Siebel File System. To make requests for access to files, the File System Manager interacts directly with the Siebel File System. To access files, most server components send a request to Server Request Manager to use the File System Manager. Server components for Siebel Remote do not use File System Manager to access the file system, but instead use Synchronization Manager.

To create the Siebel File System, see the *Siebel Installation Guide* .

Defining the Regional Node

To define each regional node, you register the regional Siebel database and then add users for this database.

To define the regional node

1. Make sure the requirements for the parent node are met.

   For more information, see *Requirements for the Parent Node*.
2. Make sure the requirements for the organization, territory, and Assignment Manager are met.

   For more information, see *Requirements for Organization, Territory and Assignment Manager*.
3. Log in to the Siebel Server with administrator privileges.

   For more information, see *Logging in to the Siebel Database as an Administrator*.
4. Navigate to the Administration - Siebel Remote screen, and then the Replication Servers view.
5. In the Parent Server form, choose a node as the parent.

   The Parent Server form displays the registered databases and indicates whether the Siebel database resides on a headquarters or on a regional node. You typically choose the headquarters node. The Regional Databases list displays regional nodes that are children of a parent database that is currently chosen in the Parent Server form. Only the headquarters database or a regional database can be the parent of another database. A local database cannot be a parent.
6. Right-click in the Regional Databases list, and then choose the Columns Displayed menu item.
7. In the Columns Displayed dialog box, move Description from the Available Columns window to the Selected Columns window, and then click Save.
8. In the Regional Databases list, click New.
9. In the Server Name field, enter a name for the regional database.

   For example, you can enter SIEBEL_EUROPE. For more information, see *Requirements for the Siebel Server Name and Local Database Names*.
10. In the Description field, type in a description of the regional database.

    For example, you can type in European Regional Database.
11. Specify the Routing Group where the regional database belongs:
    a. In the Routing Group field, click the select icon.
    b. In the Pick Routing Group dialog box, choose one of the following items:
       - Regional Server-Full Copy
       - Regional Server-Standard

       For more information, see *How Siebel Replication Manager Uses Routing Groups*.
    c. Click OK.
12. Save the record.
13. Add the users.

    For more information, see *Requirements for Adding a User to a Regional Node*.

Requirements for the Parent Node

You must configure the parent node before you can define a child of the parent node:

- If you implement a single tier of regional nodes, then the headquarters node is the parent node.
- If you implement two or more tiers of regional nodes, then the lower tier references a regional node as the parent node. Two or more tiers of regional nodes is a hierarchy of regional nodes.

If you implement a regional node whose parent node is another regional node, then you must synchronize the parent node with the headquarters node so that the parent node contains current data. This configuration reduces the amount of data that Replication Manager must replicate after you initialize the regional node.

For more information, see *Regional Node*.

Requirements for Organization, Territory and Assignment Manager

Before you define a regional node, you must make sure your organization setup and territory is finished, and that Assignment Manager runs on the headquarters node. If you modify the organization and territory after you extract and initialize the regional database, then it might be necessary for you to reextract the regional database on the parent node, and then reinitialize it. If you do not reextract and reinitialize in this situation, then Replication Manager might overload the Transaction Routers.

Requirements for the Siebel Server Name and Local Database Names

Note the following requirements for the Siebel Server name and local database names:

- The name must use to a specific format. For more information, see *Format That Siebel Remote Uses for the Remote Client Name, Database Name, Login ID, and Windows Password*.
- The name must be unique in the headquarters node and the regional nodes.
- You cannot use the following names:
  - TXNPROC
  - OUTBOX
  - INBOX
- The name does not have to match an existing database name.

Requirements for Adding a User to a Regional Node

Note the following requirements for adding a user to a regional node:

- When defining a regional node, you must add users. These users must be connected to the regional database.
- You must specify at least one connected user for the regional node before you extract the regional database.

For more information, see *Adding a User to a Regional Node*.

Extracting the Regional Database

You must extract each regional database. The regional database synchronizes with the same Siebel Server where you extract it. Replication Manager automatically creates the regional database objects, such as tables and indexes, when you extract and initialize the regional database. You can continue to add remote clients to a regional node after you extract the regional database.

CAUTION: You must specify at least one connected user for the regional node before you extract the regional database or the extraction will fail. For more information, see *Defining the Regional Node*.

Extract the regional database, you can do one of the following:

- *Extracting the Regional Database by Using the Single Thread Option*
- *Extracting Regional Databases in Parallel*

Extracting the Regional Database by Using the Single Thread Option

To extract a regional database by using the single thread option, you can use the administrative interface or the command line interface.

Extracting the Regional Database by Using the Single Thread Option in the Administrative Interface

You can extract the regional database by using the single thread option in the administrative interface.

To extract the regional database by using the single thread option in the administrative interface

1. Make sure that the required server components are synchronized.
   For more information, see *Server Components That Siebel Replication Manager Uses*, and *Siebel System Administration Guide* .
2. Log in to the Siebel Server with administrator privileges.
   For more information, see *Logging in to the Siebel Database as an Administrator*.
3. Navigate to the Administration - Server Management screen, and then the Jobs view.
4. In the Jobs list, click New.
5. In the Component/Job field, choose Database Extract.
6. In the Requested Server field, enter the name of the Siebel Server where Siebel Remote must run the extract job.
   After the job finishes, the read-only Execution Server field displays the name of the Siebel Server that ran the job. For a database extract job, this server is the same as the Requested Server.
7. Complete the remaining fields in the record, as necessary.
8. In the Job Parameters list, click New.
   a. In the Name field, click the select icon to display the Job Parameters dialog box.
   b. Choose Client Name, and then click OK to return to the main window.

c. In the Value field of the Client Name job parameter record, enter the name of the regional node.
d. To create another new job parameter record, click New.
e. In the Name field, click the select icon to display the Job Parameters dialog box.
f. Choose Database Init Method, and then click OK to return to the main window.
g. In the Value field of the Database Init Method job parameter record, replace the default value with the following value:

   DDL

9. Add other job parameters.

   For more information, see *Parameters That You Can Specify When Extracting a Regional Database*.
10. In the Jobs list, make sure the correct database extract job is chosen, and then click Start.

    The Siebel Server modifies the Status field from Creating to Queued.

Extracting a Regional Database by Using the Single Thread Option in the Server Manager Command Line Interface

You can extract a regional database by using the single thread option in the Server Manager command line interface.

To extract a regional database by using the single thread option in the Server Manager command line interface

- From the Server Manager command line, enter the following command all on one line:

  ```
  start task for comp dbxtract server server_name with client=regional_node_name, initmethod=ddl
  ```

  For more information, see *Opening the Command Line Interface for Server Manager*.

Extracting Regional Databases in Parallel

Parallel Database Extract is a version of the Database Extract server component that starts extractions in parallel. The Parallel Database Extract server component improves performance when Replication Manager extracts a large database for one or more regional nodes. It is an interactive component, using server infrastructure features to do data extractions in parallel for a large regional node. It uses multithreaded components to do this work more quickly than a single thread operation. Parallel Database Extract requires more hardware, but it can significantly reduce the time that Replication Manager requires to do a database extract.

To extract a regional database by using the Parallel Database Extract option, you can use the administrative interface or the command line interface.

Extracting Regional Databases in Parallel by Using the Administrative Interface

You can extract regional databases in parallel by using the administrative interface.

To extract regional databases in parallel by using the administrative interface

1. Make sure advanced parameters are visible.

   For more information, see *Making Advanced Server Parameters Visible*.
2. Adjust the shared pool size.

For more information, see *Adjusting the Shared Pool Size for Parallel Database Extract*.

3. Locate the record for the Parallel Database Extract server component.

   For more information, see *Locating the Record for a Server Component*.
4. Use Columns Displayed to expose the Max Tasks field of the Components list.
5. Click the Parameters tab, click Advanced, and then query the Parameter field for the following value:

   Maximum Number of Work Queue Threads

   The Max Tasks field for the Parallel Database Extract server component displays the maximum number of worker threads for each work queue. The Maximum Number of Work Queue Threads parameter determines the degree of parallelism.
6. Complete the procedure for using the administrative interface that is described in *Extracting the Regional Database by Using the Single Thread Option*, with the following modifications:

   - In the Component/Job field, choose Parallel Database Extract.
   - To specify more than one regional node, you can create a text file and then enter the name of each regional node on a single line in this file. When you specify the Value for the Client Name parameter, you enter the path and file name, preceded by the at sign (@). For example, a Windows client might specify the following value as the Value for the Client Name:

     ```
     @D:\workdir\regnodes.txt
     ```

Extracting Regional Databases in Parallel by Using the Command Line Interface

You can extract regional databases in parallel by using the command line interface.

To extract regional databases in parallel by using the command line interface

- From the Server Manager command line, enter the following command, all on one line:

  ```
  start task for comp pdbxtract server server_name with client=regional_node_name, initmethod=ddl
  ```

  For more information, see *Opening the Command Line Interface for Server Manager*.

  To specify more than one regional node, you can use a command to separate each regional node name. For example, if RN1, RN2, and RN3 are the names of three regional nodes, then you enter the following command:

  ```
  start task for comp pdbxtract server server_name with client=RN1,RN2,RN3, initmethod=ddl
  ```

Adjusting the Shared Pool Size for Parallel Database Extract

To meet the cache requirements for a parallel database extract, the init.ora file contains a parameter named SHARED_POOL_SIZE that you can adjust. The number of temporary tables that you use depends on the size of the shared pool that the Siebel Server can access. If the size of the shared pool is less than 300 MB, it is recommended that you use one temporary table and run one instance of the Database Extract component. If the size of the shared pool is greater than 600 MB, then using one temporary table for each instance of the Database Extract component might increase throughput.

The following table describes some examples for setting the shared pool size.

Number of Databases Extracted in Parallel	Table Usage
48	One database extract assigned to each S_DOCK_INITM_X table.
100	One database extract assigned to each S_DOCK_INITM_X table.
200	Two database extracts assigned to each S_DOCK_INITM_X table.

For more about:

- Sizing the shared pool, see *Siebel Performance Tuning Guide* .
- The init.ora file and the SHARED_POOL_SIZE parameter, see the *Siebel Installation Guide* .

Options for Extracting the Regional Database

This topic describes options for extracting the regional database.

Concurrently Extracting Multiple Regional Nodes

If you use Parallel Database Extract for concurrent extraction of two or more regional node databases, then make sure you specify all of the applicable regional nodes as clients in a single Parallel Database Extract job or Server Manager command. This configuration produces better performance than starting multiple Parallel Database Extract component requests or tasks that attempt to run concurrently.

Using Parallel Database Extract with Local Databases

Although it is possible to use Parallel Database Extract when extracting local databases, Parallel Database Extract might not improve performance significantly during remote client extractions, so this configuration is not recommended.

Parameters That You Can Specify When Extracting a Regional Database

The following table lists parameters you can specify when extracting a regional database.

Parameter	Name	Required	Description
CD Directory	CDDir	Optional	The folder on the computer of the parent node where the Replication Manager writes the extract files.
Client Name	Client	Required	The name of the regional database that you enter when you register the regional node. See *Defining the Regional Node*.
Database Init Method	InitMethod	Required	You must set the Database Init Method parameter to DDL. If you do not set the Database Init Method parameter to DDL, then the regional database initialization will fail.
Maximum data file size	DatFileSize	Optional	Sets the maximum size of a data file in megabytes:

Parameter	Name	Required	Description
			• The minimum size is 1. • The maximum size is 1,000. • The default value is 500. For Parallel Database Extract, the recommend Minimum size is 100 MB.
Language Code	Language	Optional	Extract messages for the specified language. The default value is ENU, for U.S. English.
(Specify the remote client version of Siebel)	ClientVersion	Optional	Specifies the software version of the remote client. The default value is 2000.

Example Folder Tree of the Parent Node

This following folder tree is an example of part of the server folder on the parent node after a Database Extract runs for regional nodes named SIEBEL_EUROPE and SIEBEL_PACIFIC:

```
SIEBEL
 DOCKING
 SIEBEL_EUROPE
 INBOX
 OUTBOX
 SIEBEL_PACIFIC
 INBOX
 OUTBOX
```

After you initialize a regional database, the folder structure on the regional node includes similar folders with more regional nodes and it includes users.

Initializing the Regional Database

This topic describes how to initialize the regional database. Replication Manager loads the regional database extract that you create in *Extracting the Regional Database* in the regional database. It creates database objects and populates them with data. You can initialize the regional database from the administrative interface or the command line interface.

Initializing the Regional Database from the Administrative Interface

You can initialize the regional database from the administrative interface.

To initialize the regional database from the administrative interface

1. Make sure your environment meets the requirements for running the Regional Database Initialization program.
   For more information, see *Requirements for Running the Regional Database Initialization Program*.
2. On the regional server, stop the Siebel Server.

You run the srvrinit command on the regional server. You must stop only the Siebel Server. Do not stop the Siebel Gateway.

3. Open a command line on the regional server.
4. If the regional server runs on Windows, then navigate to the `SIEBEL_ROOT` folder, and then run the siebenv.bat batch file, where `SIEBEL_ROOT` is the folder where you installed the Siebel Server.

   The siebenv.bat batch file sets the environment variables that srvrinit.exe requires. Make sure you run siebenv.bat in the same command shell where you run srvrinit.exe.
5. Navigate to the `SIEBSRVR_ROOT/bin` folder.
6. Run the srvrinit program:

   - In Windows, the Regional Database Initialization program is named srvrinit.exe. You must run srvrinit.exe from the DOS command prompt in the same window where you run siebenv.bat in Step 4.
   - In UNIX, the Regional Database Initialization program is named srvrinit. You must run srvrinit from the command line interface.

     The srvrinit program runs the Regional Database Initialization program and displays the Regional Database Initialization dialog box.
7. In the Siebel Remote Parameters fields, specify the values for each of the parameters that the regional server uses to connect to the parent node.

   For more information, see *Parameters of the Regional Database Initialization Program*.
8. In the Regional Database Parameters fields, specify the values for each of the parameters that the regional server uses to connect to the regional database.

   For more information, see *Parameters of the Regional Database Initialization Program*.
9. Click the following item:

   Start Initialization

   The Siebel Upgrade Wizard starts automatically and completes the work that Replication Manager requires to initialize the regional database. If a dialog box does not display while the utility runs, then something is wrong. If this situation occurs, or if the wizard fails, then see *Recovering from a Failure While Initializing a Regional Database*. For more information, see *Error Messages That You Can Ignore*.
10. Wait for the initialization to finish.
11. Enable the required server components, such as Siebel Remote and the required object managers.

    For more information, see *Administering Server Components for Siebel Remote*. For information about enabling object managers and other components, see *Siebel System Administration Guide* .
12. Install the Siebel Application Interface, and then configure it using Siebel Management Console.
13. If necessary, create user accounts.

    Srvrinit does not create user accounts. You must create users for database accounts for all users who access the regional node.

Initializing the Regional Database from the Command Line Interface

You can initialize the regional database from the command line interface.

To initialize the regional database from the command line interface

- Navigate to the `SIEBEL_ROOT\bin` folder, and then enter the following command:

  ```
  srvrinit flags
  ```

  For more information, see *Parameters of the Regional Database Initialization Program*.

Requirements for Running the Regional Database Initialization Program

To initialize the regional database from the Siebel Server, you use the Regional Database Initialization (srvrinit) program. Srvrinit does the following work:

- Connects to the parent Siebel Server, and then downloads the regional database extract for the regional node.
- To initialize the database, it starts the Siebel Upgrade Wizard.

Note the following requirements:

- You must do this work on the Siebel Server on the regional node.
- You must make sure that sufficient transaction space, known as the Rollback Segment, is available on the regional database. To determine if you must increase or modify the existing rollback segment, you can work with your database administrator.
- You must make sure that the database user ID and password that you use to run srvrinit exists on the Siebel Server of the headquarters node and the regional node. Srvrinit only allows you to specify one set of credentials. It must use those credentials for these computers. If credentials on the two computers are different, then the process might not start, or it might fail before it finishes.

Error Messages That You Can Ignore

You can ignore the following error messages:

- ORA-01921: role name 'SSE_ROLE' conflicts with another user or role name
- ORA-01017: invalid username/password, or logon denied
- ORA-00942: table or view does not exist

These messages might display while you initiate a regional database.

Options for Initializing the Regional Database

This topic describes options for initializing the regional database.

Running Srvrinit in Parallel to Improving Performance

If the Siebel Server includes multiple CPUs and disk arrays, then you can run srvrinit in parallel to significantly improve performance.

Reducing the Rollback Segment

To reduce the size of the rollback segment that srvrinit requires, you can reduce the following extract parameter for the regional database:

Maximum data file size (DatFileSize)

The srvrinit task sends commits for each file. The smaller the file, the smaller the rollback segment. For more information, see *Parameters of the Database Extract Server Component*.

Reinitializing a Regional Node

If you reinitialize a regional node with remote clients, then you must verify that the remote clients who synchronized with this node can reinitialize without having to delete their local databases.

Recovering from a Failure While Initializing a Regional Database

If the regional database initialization fails, then you must recover from this failure before you restart Replication Manager. An example cause for failure is insufficient storage space on the regional database.

To recover from a failure while initializing a regional database

1. Restart the Regional Database Initialization program.
2. Examine the log files.

   The log files include srvrinit.log and upgwiz.log on Windows or srvrupgwiz1.log on UNIX.
3. Do the required corrective actions.
4. To resume the procedure for initializing a regional database, restart the Siebel Upgrade Wizard.

   To restart the executable for this wizard on Windows, you type `siebupg.exe`. On UNIX, you type `srvrupgwiz`.

   The state logging feature of the Siebel Upgrade Wizard allows you to restart the Siebel Upgrade Wizard. The Siebel Upgrade Wizard remembers the progress of the initialization process and resumes from the same location where it stopped.

If necessary, you can restart the entire procedure. For more information, see *Restarting the Procedure to Initialize a Regional Database*.

Restarting the Procedure to Initialize a Regional Database

This topic describes how to restart an interrupted initialization procedure.

To restart the procedure to initialize a regional database

1. On the regional node, navigate to the `SIEBEL_ROOT/bin` folder.
2. If you are working in Windows, then do the following steps:
   a. Run the Siebel Upgrade Wizard.

   b. Click Cancel when this wizard prompts you to choose Yes to retry, No to abort, or Cancel to abort and clean up.
3. If you are working in UNIX, then do the following steps:
   a. Locate the upgwiz.ucf file, and then delete it.
   b. Navigate to the `SIEBEL_ROOT/upgrade` folder, and then delete all files that contain state.log in the file name.
4. Rerun the initialization procedure, starting with Step 1 in the topic *Initializing the Regional Database from the Administrative Interface*.

Configuring the Regional Node to Support Remote Clients

If the Siebel Server of a regional node includes remote clients, then you must start and configure the server components that Siebel Remote uses on that Siebel Server.

To configure the regional node to support remote clients

1. Open the Server Manager command line.

   For more information, see *Opening the Command Line Interface for Server Manager*.
2. To create database templates on the Siebel Server on the regional node, use the Generate New Database server component.

   For more information, see *Running the Generate New Database Server Component*.
3. To extract remote clients, run Database Extract.

   For more information, see *Extracting the Server Database*.
4. Start the Transaction Processor, Transaction Merger, and Transaction Router server components.

   For more information, see *Administering Server Components for Siebel Remote*.

Configuring the Replication Agent Server Component

This topic describes how to configure the Replication Agent server component. It includes the following information:

- *Starting and Stopping the Replication Agent Server Component*
- *Setting Tasks to Start Automatically for the Replication Agent When the Siebel Server Starts*
- *Using Replication Agent to Control Synchronization*
- *Resolving Synchronization Conflicts*

For more information, see:

- Replication Agent in the topic *Regional Node*
- *Siebel System Administration Guide*

Starting and Stopping the Replication Agent Server Component

To synchronize the regional database, the Replication Agent server component must be in an Online state. This topic describes how to start and stop Replication Agent while the Siebel Server is running.

Starting Replication Agent in the Administrative Interface

You can start Replication Agent in the administrative interface.

To start Replication Agent in the administrative interface

1. Locate the record for the Replication Agent server component.

   For more information, see *Locating the Record for a Server Component*.
2. Set the HQ Application Server Name parameter:
   a. Click the Parameters tab and then query the Parameter field for the following value:

      HQ Application Server Name
   b. In the Value On Restart field, enter a value for the dock connect string.

      For more information, see *Setting the HQ Application Server Name Parameter*.
3. Optional. Configure tasks for Replication Agent to start automatically when the Siebel Server starts.

   For more information, see *Setting Tasks to Start Automatically for the Replication Agent When the Siebel Server Starts*.
4. Navigate to the Administration - Server Management screen, and then the Components view.
5. Start Replication Agent.

Starting and Stopping Replication Agent in the Server Manager Command Line Interface

You can start or stop Replication Agent in the Server Manager command line interface.

To start or stop Replication Agent in the Server Manager command line interface

1. Open the Server Manager command line.

   For more information, see *Opening the Command Line Interface for Server Manager*.
2. If necessary, to start Replication Agent, do the following:
   a. Enter the following command all on one line:

      ```
      change param HQ=DockConnString, sleeptime=number_of_seconds_to_sleep for comp repagent
      server server_name
      ```

      Siebel CRM sets the sleeptime to 60 seconds, by default. It is not necessary for you to configure sleeptime. For more information, see *Using Replication Agent to Control Synchronization*.
   b. Enter the following command all on one line:

      ```
      start task for comp repagent server server_name
      ```

3. If necessary, to stop Replication Agent, enter the following command:

```
stop task for comp repagent server server_name
```

Setting the HQ Application Server Name Parameter

You must set the HQ Application Server Name parameter for Replication Agent, which identifies the dock connect string of the parent Siebel Server. The parameter uses the following format:

```
server_name:TCPIP:port_number:SMI:encryption
```

where:

- server_name identifies the name of the headquarters server
- TCPIP is the *network protocol*
- port_number identifies the port number for the Replication Agent. You can use one of the following values. 40400 is the default value:
  - 40400
  - Any
- SMI is the encryption service
- encryption identifies the encryption type. You can use one of the following values. None is the default value:
  - RSA
  - None

Setting Tasks to Start Automatically for the Replication Agent When the Siebel Server Starts

Although Replication Agent starts automatically when the Siebel Server starts, it starts with zero tasks, by default. To cause the Siebel Server to automatically start tasks for Replication Agent when the Siebel Server starts, you can modify the Default Tasks parameter to 1. For more information, see *Siebel System Administration Guide* .

To set tasks to start automatically for Replication Agent when the Siebel Server starts

1. Make sure advanced parameters are visible.

   For more information, see *Making Advanced Server Parameters Visible*.
2. Verify that the external resources that the current tasks access are running on the existing Replication Agent server component.
3. Verify that the external resources that future tasks access that run on the reconfigured Replication Agent server component are available.

   Examples of external resources include the configuration files that you specify for the Replication Agent server component. For more information, see *Modifying the Siebel Configuration File for Siebel Remote*.
4. Make sure the Default Tasks parameter is visible.

For more information, see *Making Advanced Server Parameters Visible*. For an alternative, see *Using Server Manager to Set the Default Tasks Parameter*.

5. Locate the record for the Replication Agent server component.

   For more information, see *Locating the Record for a Server Component*.
6. Click the Parameters tab, click Advanced, and then query the Parameters field for Default Tasks.
7. Set the value in the Value field to 1.

   The Replication Agent starts automatically when the Siebel Server restarts.

Using Server Manager to Set the Default Tasks Parameter

To set the Default Tasks parameter, you can use the Server Manager instead of the administrative interface.

To use Server Manager to set the default tasks parameter

- From the Server Manager command line, enter the following command:

  ```
  srvrmgr> change param DfltTasks=1 for comp repagent
  ```

  For more information, see *Opening the Command Line Interface for Server Manager*.

Using Replication Agent to Control Synchronization

To control synchronization, you can modify the parameters of the Replication Agent server component.

To use Replication Agent to control synchronization

- Modify parameters of the Replication Agent server component.

  You can modify the following generic format to start Replication Agent from the Server Manager:

  ```
  start task for comp repagent server server_name with parameter_1= value_1, parameter_2= value_2,...
  ```

  For more information, see *Parameters of the Replication Agent Server Component*.

Resolving Synchronization Conflicts

To resolve data conflicts or corrupted transactions that Replication Manager encounters, you can use resolution rules. No log file is currently available. For more information, see *How Siebel Remote Resolves Conflicts in Data It Synchronizes*.

Installing Another Siebel Server on the Regional Node

Replication Manager can call Srvrinit only one time. Only one Siebel Server receives the dictionary files when srvrinit runs. It places these files in the `bin` folder of the Siebel Server. An additional Siebel Server is not functional because it

does not contain a dictionary datafile. The Siebel Server of a regional node does not contain repository rows. Replication Manager gets the dictionary information from this data file. The additional server requires an operational copy of the dictionary.

To install another Siebel Server on the regional node

1. Install the additional Siebel Server.

   For more information, see the *Siebel Installation Guide* .
2. Copy the dicdata.dat from the `bin` folder of the Siebel Server where you ran srvrinit to the bin folder of the new application.

   The dictionary data files are specific to a character set. You must use a codepage dictionary cache.

12 Administering Siebel Replication Manager

Administering Siebel Replication Manager

This chapter describes how to administer Siebel Replication Manager. It includes the following topics:

- *Process of Administering Siebel Replication Manager*
- *Guidelines for Doing Administrative Work*

Process of Administering Siebel Replication Manager

This process is a step in *Roadmap for Implementing Siebel Remote*.

To administer Siebel Replication Manager, you do the following:

1. *Adding a Connected User to a Regional Node*
2. *Adding a User to a Regional Node*
3. *Deleting a Remote Client from a Regional Node*
4. *Managing Synchronization for a Regional Node*
5. *Modifying the Routing Group for a Regional Node*
6. *Deactivating a Regional Node*
7. *Reactivating a Regional Node*
8. *Upgrading a Regional Node*
9. *Modifying Authentication for Siebel Replication Manager*
10. *Maintaining Siebel Replication Manager*

The order that you use to do these steps and how often you do them might vary according to your requirements.

Adding a Connected User to a Regional Node

This topic describes how to add a connected user to a regional node.

To add a connected user to a regional node

1. Make sure the user is a connected user at the headquarters node.
   You must add a user to the parent node before you add this user to a regional node. For more information, see *Siebel Applications Administration Guide* .
2. Locate the record for the regional database where you must add a remote client.
   For more information, see *Locating the Record for the Regional Database*.
3. In the Users field, click the select icon.
4. In the Database Users dialog box, choose a user from the Available list, and then click Add.
5. Repeat Step 3 through Step 4 for each connected user that you must add to the regional node.
   For more information, see *Requirements for Adding a User to a Regional Node*.
6. Click OK.

7. Save the record.
8. Create a user access account on the regional node.

   A user access account is a database account or other external folder service, such as LDAP. For more information, see *Siebel Security Guide* .
9. Optional. To add more connected users, repeat Step 1 through Step 8 for each connected user.
10. Wait to make sure Replication Manager copies the new user data to the regional node.

    Depending on your network and hardware configuration, this step might take a few hours to finish.

Locating the Record for the Regional Database

This topic describes how to locate the record for the regional database that you must administer.

To locate the record for the regional database

1. Log in to the Siebel Server with administrator privileges.

   For more information, see *Logging in to the Siebel Database as an Administrator*.
2. Navigate to the Administration - Siebel Remote screen, and then the Replication Servers view.
3. In the Parent Server form, query the Server Name field for the parent of the regional node where the regional database resides.
4. In the Regional Databases list, query the Server Name field for the name of the regional database that you must administer.

Adding a User to a Regional Node

This topic describes how to add a user to a regional node. For more information, see *Requirements for a User on a Regional Node*.

CAUTION: If you add a user who is assigned to the Siebel Administrator position to a regional node, then a very large download might occur. The Siebel Administrator position, including SADMIN, allows the user to do a wide variety of administrative work. It includes access to most of the views that a Siebel application displays.

To add a user to a regional node

1. Add the user as a connected user.

   For more information, see *Adding a Connected User to a Regional Node*.
2. Add the user as a remote client.

   For more information, see *Adding a New Remote Client*.
3. Repeat Step 1 and Step 2 for each user that you must add to the regional node.

Requirements for a User on a Regional Node

If a regional node supports users, then the following requirements apply:

- You must first add every user on a regional node to the node as a connected user, and then add that user as a remote client.
- You can assign a user to only one Siebel Server of the headquarters node or to one regional node.

- If you reassign a remote client to a different parent server, then you must synchronize and then reextract that client.

Deleting a Remote Client from a Regional Node

This topic describes how to delete a remote client that resides on the regional node. You delete a remote client from a regional node in the same way that you would delete it from the headquarters node.

For more information, see *Deleting a Remote Client*.

Managing Synchronization for a Regional Node

During the course of operation after you complete an initial implementation of Replication Manager, it might be necessary for you to adjust how Replication Manager synchronizes a regional node.

To manage synchronization for a regional node

- Use parameters of the Replication Agent server component to more closely align synchronization with your environment requirements.

For more information, see *Configuring the Replication Agent Server Component*.

Modifying the Routing Group for a Regional Node

You can modify the routing group for the Siebel Server of a regional node. For more information, see *How Siebel Replication Manager Uses Routing Groups*.

To modify the routing group for a regional node

1. If the regional node contains remote clients, then synchronize these clients with the regional node.
2. Send updates that exist in the regional node to the headquarters or parent node.
3. Stop any update activity on the regional node.
4. Locate the record for the regional database where you must modify the routing group.
   The correct node for the parent in the Parent Server form is typically HQ. For more information, see *Locating the Record for the Regional Database*.
5. In the Routing Group field, click the select icon.
6. In the Pick Routing Model dialog box, choose the new Routing Group, and then click OK.

   CAUTION: For important caution information about modifying the routing group from Standard to Full Copy, see *Requirements for Extracting the Server Database*.

7. Extract the regional database.
   For more information, see *Extracting the Regional Database*.
8. Initialize the regional database.
   For more information, see *Initializing the Regional Database*.

9. Extract the Siebel database for each remote client that exists on the new regional node.

   For more information, see *Extracting the Server Database*.
10. Resume operations on the regional node.

Deactivating a Regional Node

This topic describes how to deactivate a regional node.

> **CAUTION:** Make sure you do a full backup of the headquarters node and the regional nodes before you deactivate a regional node.

To deactivate a regional node

1. Synchronize remaining transactions of the users who are assigned to the regional node.
2. Make sure all transactions are applied to the regional node.

   For example, make sure the Transaction Merger on the regional node has processed the DX files.
3. Make sure the transactions are synchronized with the headquarters node.
4. Move sure every user who resides on the deactivated regional node is also assigned to the headquarters node or to another regional node.
5. Shut down the following server components on the regional node:
   - Transaction Processor
   - Transaction Router
   - Transaction Merger
   - Replication Agent

   For more information, see *Using the Command Line Interface to Administer Server Components*.
6. Shut down the Transaction Processor and Transaction Router server components on the headquarters node.
7. On the headquarters node, navigate to the Administration - Siebel Remote screen, and then the Replication Servers view.
8. Set the Effective End Date for the regional node.
9. Restart the Transaction Processor and Transaction Router server components on the headquarters node.

   For more information, see *Using the Administrative Interface to Administer Server Components*.
10. To make sure the connected users of the regional node reference the headquarters node, you modify the ODBC sources and the configuration file.

    For more information, see *Modifying the Siebel Configuration File for Siebel Remote*.
11. Delete the deactivated docking folder for the regional node from the `SIEBEL_ROOT\docking` folder on the headquarters node.

Reactivating a Regional Node

You can reactivate a regional node.

To reactivate a regional node

1. Log in to the Siebel Server of the headquarters node with administrator privileges.

   For more information, see *Logging in to the Siebel Database as an Administrator*.
2. Shut down the Transaction Processor and Transaction Router server components on the headquarters node.
3. Navigate to the Administration - Siebel Remote screen, and then the Replication Servers view.
4. Set the Effective End Date to NULL for the regional node you are reactivating.
5. Reextract the regional database.

   For more information, see *Extracting the Regional Database*.
6. Reinitialize the regional database.

   For more information, see *Initializing the Regional Database*.

Upgrading a Regional Node

You must distribute any object definition modifications that you make to the headquarters, regional, and local databases. This is known as a minor upgrade. Some examples of modifications to object definitions include modifications to the behavior of an application or adding extension columns to a table. You can make these Siebel Repository updates in Siebel Tools and then make sure they are part of the Siebel runtime repository in the regional database or local databases. A set of DDL (Data Definition Language) operations represents schema object modifications.

In any one schema hierarchy, each Replication Manager instance and each remote client must contain the same database schema and Siebel runtime repository. If the Siebel Server and the remote client do not contain the same Siebel runtime repository, then transactions can become corrupt. If you modify the schema or Siebel runtime repository, then you must configure Siebel Remote to upgrade each remote client during the next synchronization. This upgrade is necessary even if this modification does not affect the schema. During typical operations there can be a short moment where the Siebel Server and the remote client contain a different Siebel runtime repository.

For more information, see *Overview of the Siebel Remote Architecture*.

To upgrade a regional node

1. Thoroughly test the repository modifications and upgrade steps.

   It is strongly recommended that you thoroughly test the repository modifications and upgrade steps in a separate test environment before you migrate them to a production environment.
2. Update and distribute the upgraded Siebel runtime repository.
3. Make sure each user synchronizes with the regional database.

   After synchronizing, each user must not modify the local database until after you finish the upgrade. If you apply these modifications to the Siebel Server on the regional node, then problems might occur.
4. Wait for Replication Manager to finish applying every transaction to the regional node.
5. To synchronize the regional node with the parent node, run Replication Agent.

   The parent node is typically the headquarters node. Do not modify the regional node until after you finish the upgrade. If you apply these to the parent node, then problems might occur.
6. Wait for Replication Manager to finish applying the transactions to the Siebel database on the parent node.
7. If necessary, disconnect all users, and then stop the server components.

All upgrades do not require this step.

8. Apply the upgraded Siebel runtime repository to the headquarters node.

   You can distribute the Siebel runtime repository using Siebel Anywhere. For more information, see *Siebel Anywhere Administration Guide* .
9. Finish the upgrade:
   - If you use Siebel Anywhere, then see *Finishing the Upgrade with Siebel Anywhere*.
   - If you do not use Siebel Anywhere, then see *Finishing the Upgrade without Siebel Anywhere*.

Finishing the Upgrade with Siebel Anywhere

If you use Siebel Anywhere, then you can use it to apply schema modifications. For more information, see *Siebel Anywhere Administration Guide* .

To finish the upgrade with Siebel Anywhere

1. Restart server components, and then make the Siebel application is available to users.
2. Build the upgrade kit for the Siebel database schema.
3. Distribute the upgrade kits, and then finish the upgrade.

Finishing the Upgrade without Siebel Anywhere

If you do not use Siebel Anywhere, then you must reextract and reinitialize the regional and Remote nodes after you apply the Siebel repository modifications and synchronize the physical schema.

To finish the upgrade without Siebel Anywhere

1. Synchronize the repository with the physical schema.
2. Allow connected users at the headquarters node to reconnect and continue working using the new Siebel runtime repository.
3. To create a new database template on the parent node, use Generate New Database.
4. On the parent node, do a database extract of the regional node.
5. Initialize the regional node.
6. Allow connected users on the regional node to reconnect and to resume work using the new Siebel runtime repository.
7. Generate a new database template on the regional node.
8. Extract each remote client on the regional node.
9. Allow users to reinitialize their local databases and to resume work using the new Siebel runtime repository.

Language Requirements

Although the language can vary for each instance in any one hierarchy, you must create the Siebel runtime repository from the same Siebel development repository. For example, the Siebel runtime repository in a replication environment can be in a language that is different from the Siebel runtime repository in the headquarters environment, even if you generate both of these Siebel runtime repositories from the same Siebel development repository. The language that a remote client uses can be different from the language that another remote client in the same hierarchy uses even if both clients use a Siebel runtime repository created from the same Siebel development repository.

Generating Reporting Relationships

If you upgrade to a new version of the Siebel CRM software, or if the denormalized hierarchy structure becomes out of synchronization with the data in the normalized tables, then it might be necessary for you to do the Generate Reporting

Relationships process. This process creates a large number of transactions for Siebel users and regional nodes. It requires significant resources of time, CPU, and memory. For more information, see *Siebel Database Upgrade Guide* .

Modifying Authentication for Siebel Replication Manager

To log on to the parent node, Replication Manager uses the user name and password of the administrator. When logging on, it authenticates with the parent node according to the Authentication Method that you set in the Synchronization Manager server component of the parent node. The parent node is typically the headquarters node.

The regional application servers and srvrinit use the administrator login. It is recommended that you use the same administrator user name and password on the headquarters database and on the regional databases.

To modify authentication for Replication Manager

1. Modify the password according to the Authentication Method.

   For example, if you set the Authentication Method to Database, and if you modify the password in the Siebel database of the parent node, then you must modify the same password on the regional node. For more information, see *Parameters of the Synchronization Manager Server Component*, and see *Siebel Security Guide* .
2. To modify the password, use the Siebel Server on the regional node:

   a. Navigate to the Administration - Server Configuration screen, Enterprises, and then the Parameters view.
   b. In the Enterprise Parameters list, query the Parameter field for Password.
   c. Enter a value in the Value field.
   d. Stop the Siebel application services.

      For more information, see *Siebel System Administration Guide* .
   e. Restart the Siebel application services.

   The Siebel Server applies the modifications you make after the services restart. For more information, see *About the Siebel Enterprise and the Siebel Enterprise Server*.

Maintaining Siebel Replication Manager

This topic describes some of the management activities not addressed elsewhere in this chapter that you can do periodically to keep your Replication Manager implementation running efficiently.

Backing Up and Recovering a Database on the Headquarters Node or Regional Node

This topic describes how to backup and recover a database of the headquarters or regional node.

To back up and recover a database on the headquarters node or regional node

1. Make sure you do regular backups and maintenance tasks on the headquarters database and on the regional databases.

   It is strongly recommended that you regularly do this work.

2. If a failure occurs, then do the following work:
    - If a failure occurs on a regional database, and if you cannot recover it to the exact point of failure, then you must reextract the regional database on the Siebel Server at the parent node.
    - If transactions are lost on the headquarters node, then you must do the following:
        - Reextract all child nodes.
        - Reextract the users who synchronize with the regional server whose regional database failed.

If you can recover the regional node to the exact point of failure, then the S_DOCK_STATUS values of the headquarters and regional nodes are synchronized. Replication Manager synchronizes the following transactions after recovery to the point of failure:

- Transactions that Replication Manager had not synchronized at the time of failure
- Transactions that Replication Manager created on the headquarters node and the regional nodes after the point of failure

Backing Up and Recovering the Siebel Enterprise Server

To back up the entire Siebel database or user schema, you can use an RDBMS tool that a third-party supplier provides. You must take some precautions, such as not backing up the docking folders. After moving the Oracle database to a new machine, follow the solution outlined below.

The Oracle Database Administrator (DBA) might decide to move the Oracle database from machine A to machine B for several reasons.

- If this is a planned move, then the instructions in this topic should be tested in a test environment first and a backup should be taken before a production move.
- If this is an unplanned move, for example, for disaster recovery of the Oracle database, follow the same steps.

The Siebel Administrator and Oracle DBA have two options for pointing the Siebel Server(s) and dedicated clients to the new database.

- Option 1: Only update the SQL*net TNS alias
- Option 2: Create a new TNS alias

Option 1: Only update the SQL*net TNS alias

If the TNS alias name doesn't need to be changed, then only the connection details -- most likely the HOST and SERVICE_NAME (or SID) -- need to be updated. The following `tnsnames.ora` file is for information only. Oracle recommends that changes to the `tnsnames.ora` be made using the Oracle-supplied Net Manager Tool. Note that the DBA can provide the new settings.

Change:

```
SiebelDB.SIEBEL.COM = (DESCRIPTION = (ADDRESS_LIST = (ADDRESS = (PROTOCOL = TCP)(HOST = machineA)(PORT =
 1521)) ) (CONNECT_DATA = (SERVER = DEDICATED) (SERVICE_NAME = SiebelDB) ) )
```

to:

```
SiebelDB.SIEBEL.COM = (DESCRIPTION = (ADDRESS_LIST = (ADDRESS = (PROTOCOL = TCP)(HOST = machineB)(PORT =
 1521)) ) (CONNECT_DATA = (SERVER = DEDICATED) (SERVICE_NAME = NewSiebelDB) ) )
```

Option 2: Create a new TNS alias

If a new TNS alias needs to be created, then you must do the steps outlined here.

1. Create the new TNS alias using the Oracle-supplied Net Manager Tool.
2. Change the appropriate Configuration (CFG) file to reference the new TNS alias created in the above step.
3. In the [ServerDataSrc] section, change the value of the `ConnectString` parameter to the new TNS alias.

   Make this change for all the dedicated client CFG files and all the CFG files in the `SiebSrvr\bin` directory (version 6.x) or `SiebSrvr\bin\<lang>` (version 7.x).
4. Change the Siebel Servers ODBC Data Source Name (DSN). Change the Server Name entry to use the new TNS alias using the ODBC Data Source Administrator on the machine where the Siebel Server is installed. The System DSN is in the format of `SiebSrvr_<EnterpriseName>`.
5. Change the ODBC Data Source Name (DSN) for any dedicated clients.
6. Change the Server Name entry to use the new TNS alias using the ODBC Data Source Administrator on the machine where the dedicated client is installed. The User DSN is in the format of `SEAW <InstallationDirectory>`. The Siebel Server will need to be stopped and restarted for this change to take effect.
7. For Siebel 7.x and above, update the gateway configuration information. By default the Object Managers no longer read the CFG files for the database connect string (see the OM parameter, OM - Read Configuration From Server Component Parameters). Therefore, the gateway configuration for that enterprise must updated to reflect the new TNS alias. The commands to use are below, but first, Siebel administrators must back up the `Siebns.dat`, either manually by copying the file or using the SRVRMGR backup `nameserver` command, for example: `SRVRMGR> backup nameserver SRVRMGR> change parameter DSConnectString=<new TNS alias>` for named subsystem ServerDataSrc.

Change the ODBC Data Source Name using the client GUI:

1. Navigate to View > Site Map > Server Administration > Enterprise Configuration. (version 7.x) or View> Site Map > Administration – Server Configuration > Enterprises (version 8.x).
2. Select the Enterprise Profile Configuration tab (version 7.x) or Profile Configuration tab (version 8.x).
3. Select ServerDataSrc in the top list applet.
4. In the lower applet, find the `DSConnectString` and change its value to the new TNS alias.

   The Siebel server will need to be stopped and restarted for this change to take effect.

> **Note:** The TNS alias is listed in the `Siebns.dat` twice. `DSConnectString`, which is used to connect to the database and is modified as above `DatabaseConnStr` (which is only used during the installation process to create the ODBC data sources). Users can't change this value directly using SRVRMGR or the GUI, but they can modify the ODBC DSN (see previous steps).

Administering Monitoring and Logging

This topic describes how to monitor Siebel Servers and how to manage data that Replication Manager logs in the transaction log table.

Monitoring the Regional Siebel Servers

This topic describes how to monitor the regional Siebel Servers.

To monitor the regional Siebel Servers

- To monitor server components and the movement of data between regional nodes and the parent node, use the following screens in the administrative interface:

- Administration - Siebel Remote
- Administration - Server Management

It is also recommended that you monitor disk space availability.

Reducing the Transaction Log Table by Expiring Obsolete Transaction Processor Tasks

It is strongly recommended that you periodically expire each obsolete Transaction Processor task. A Transaction Processor task can become obsolete in the following situations:

- Replication Manager starts a Transaction Processor task on the Siebel Server but then does not use it
- Replication Manager starts a Transaction Processor task and then you uninstall the Siebel Server
- After an upgrade

For more information, see *Troubleshooting a Large Transaction Backlog Problem*.

To reduce the transaction log table by expiring obsolete transaction processors

1. Log in to the Siebel Server with administrator privileges.

   For more information, see *Logging in to the Siebel Database as an Administrator*.
2. Navigate to the Administration - Siebel Remote screen, and then the Processor Status view.
3. In the Transaction Processors list, choose the obsolete Transaction Processor.
4. In the End Date field, enter an end date that has already occurred.

Guidelines for Doing Administrative Work

This topic describes guidelines you can follow when doing administrative work.

Do Administrative Work on the Headquarters Node

It is recommended that you do administrative work only if you are connected to the Siebel Server of the headquarters node. Example administrative work includes configuring and deactivating remote clients when using the Administration - Replication Server view. Although you can do some administrative work on the Siebel Server of a regional node, doing so causes a delay before Replication Manager copies the data to the headquarters database and then copies it to the regional database. In this situation, a data conflict can occur.

13 Troubleshooting Siebel Remote

Troubleshooting Siebel Remote

This chapter describes how to help resolve problems with Siebel Remote. It includes the following topics:

- *Troubleshooting a Merge Problem*
- *Troubleshooting a Synchronization Manager Problem*
- *Troubleshooting a Problem Where the User Cannot View Records Locally*
- *Troubleshooting a Large Transaction Backlog Problem*
- *Recovering from a Failure*
- *Using Troubleshooting Utilities*

Troubleshooting a Merge Problem

This topic describes how to troubleshoot problems that occur during a merge. It includes the following information:

- *Troubleshooting an Assignment Manager Merge Problem*
- *Troubleshooting a Transaction Merger Problem*

Troubleshooting an Assignment Manager Merge Problem

If the LogTxnChgOnly (Log Transaction on Change Only) parameter for Assignment Manager is True, then Siebel Remote might log a lot of merge conflicts. You can safely ignore many of these merge conflicts. This topic describes why this situation occurs and includes a scenario that describes how these merge conflicts occur.

Why LogTxnChgOnly Affects the Quantity of Merge Conflicts

When LogTxnChgOnly is True, Assignment Manager does not log transactions for modifications that only affect the ASGN_DT field for a record. The ASGN_DT field records the most recent date and time that Assignment Manager assigned that record. This field is not typically visible in a Siebel application.

If you modify only the value of the ASGN_DT field, then Siebel Remote does not log transactions and it does not send these modifications to the remote client. Not sending these modifications causes a discrepancy between the record version that is stored on the Siebel Server and the version that is stored in the local database on the remote client. The discrepancy causes no immediate problem because it does not affect the data fields that are visible for the record. Allowing such harmless discrepancies can significantly reduce the amount of data that Siebel Remote must transfer to the remote client during synchronization.

If Assignment Manager updates data fields that are visible in the record at a later time, then Siebel Remote logs a transaction. In this situation, Siebel Remote detects the discrepancy in the value of the ASGN_DT field the next time that the remote client attempts a synchronization, and it reports the discrepancy as a merge conflict.

Scenario for a Harmless Merge Conflict

This topic gives one example of how a harmless merge conflict occurs. You might experience this merge conflict differently, depending on your business requirements. To keep the examples simple, the value of the ASGN_DT field that this scenario describes is a date only, although the field actually includes date and time. The following sequence of events is an example that produces a harmless merge conflict:

1. The Siebel Server runs Assignment Manager and modifies the value of several fields in record X, including setting the value of the ASGN_DT field to 2018-10-29. Siebel Remote modifies values in one or more visible fields and logs a transaction.
2. A remote client synchronizes and receives the updated values for all fields in record X, including the value of 2018-10-29 for the ASGN_DT field.
3. The Siebel Server runs Assignment Manager and modifies the value of the ASGN_DT field to 2018-10-30 but it does not modify values in any visible fields. Siebel Remote does not log a transaction and it does not send the modified value of the ASGN_DT field to the remote client.
4. The Siebel Server runs Assignment Manager and modifies the value of several fields in record X, including setting the value of the ASGN_DT field to 2018-10-31. Siebel Remote modifies values in one or more visible fields and logs a transaction.
5. The remote client synchronizes and receives the updated values for all fields in record X, including a value of 2018-10-31 for the ASGN_DT field. This situation causes a conflict because the transaction updates the value of the ASGN_DT field from 2018-10-30 to 2018-10-31, but the current value of ASGN_DT in the local database is 2018-10-29. The old value in the transaction does not match the current value in the local database, so Siebel Remote reports a conflict.

Distinguishing Between a Harmless and a Meaningful Merge Conflict

This topic describes how to distinguish between a harmless merge conflict that is caused by modifications to ASGN_DT fields and a potentially meaningful conflict that involves your data.

To distinguish between a harmless and a meaningful merge conflict

1. Using the remote client, navigate to the User Preferences screen, and then the Remote Status view.
2. In the Remote Status list, choose the record of a synchronization session that interests you.
3. In the Session Actions list, choose a record that includes the following value in the Item Name field:

   Apply database changes
4. In the Session Action Details list, examine the messages in the Item Details field, using values from the following table.

Description	Guideline
The Item Detail includes the following information: ○ Who updated the record. For example: Updated by HKIM ○ A visible data field. For example: Field: Product Under Warranty Flag, New Value: Y, Old Value: N	This detail identifies a potentially meaningful conflict. To determine if Siebel Remote resolves the conflict correctly, you can examine the values that exist on the Siebel Server and the remote client.

Description	Guideline
The Item Detail includes the following information: ○ Does not identify who updated the record. For example: Updated by? ○ Identifies an Assignment Date field. For example: Field: Assignment Date, New Value: 2018-11-04 11:09:18.000000, Old Value: 2018-10-25 10:10:02.000000	This detail identifies a harmless conflict. You can ignore it.

Troubleshooting a Transaction Merger Problem

This topic describes how to use a temporary solution to restart Transaction Merger until you can determine the root cause of the problem.

CAUTION: For important caution information about renaming or deleting a DX file, see *Requirements for Extracting the Server Database*.

To troubleshoot a Transaction Merger problem

1. To identify the remote client and the DX file that is involved with this problem, examine the log file of the Transaction Merger.
   For more information, see *Example Log File for Transaction Merger* and *Naming Conventions for Log Files*.
2. If the error is specific to one remote client, then you can rename the `INBOX` folder for this remote client.
   For example, rename the `C:\siebel\ses\siebsrvr\docking\sadmin\inbox` folder to `C:\siebel\ses\siebsrvr\docking\sadmin\inbox_old`.
   This is a temporary solution because the remote client cannot synchronize.
3. Restart the Transaction Merger server component.
   If Transaction Merger runs, then this problem only affects one remote client. If Transaction Merger fails again, then the failure applies to multiple remote clients.
4. Get help.
   For help with a Transaction Merger problem, see *Getting Help from Oracle*. Be prepared to send the related DX file and the trace file.

Example Log File for Transaction Merger

For the example in this topic, the remote client is SADMIN and the DX file is 00000009.dx. The VALUES line contains a series of question marks and each question mark is bound to a parameter value. The line that displays immediately following the line that contains the question marks includes the value for each question mark. For example:

```
INSERT INTO dbo.S_EMPLOYEE(NAME, AGE, SEX)
VALUES(?,?,?)
NAME: Bill
AGE: 40
SEX: M
```

Example Log File

The following text is an example of a log file for Transaction Merger:

```
[TRC35] >>> Processing Client: SADMIN

[TRC35] File: C:\siebel\ses\siebsrvr\docking\SADMIN\inbox\00000009.dx

[TRC33] 2017-03-04 12:09:51 Client: SADMIN, File:
C:\siebel\ses\siebsrvr\docking\SADMIN\inbox\00000009.dx.

[DBG33] 2017-03-04 12:09:51 Message: Generated SQL statement:,

Additional Message: SQLExecute: INSERT INTO dbo.S_OPTY_PROD_X (ATTRIB_01, ATTRIB_02,
ATTRIB_03, ATTRIB_04, ATTRIB_05, ATTRIB_06, ATTRIB_07, ATTRIB_08, ATTRIB_09,
ATTRIB_10, ATTRIB_11, ATTRIB_12, CONFLICT_ID, CREATED, CREATED_BY, LAST_UPD,
LAST_UPD_BY, MODIFICATION_NUM, PAR_ROW_ID, ROW_ID)

VALUES (?, ?, ?, ?, ?, ?, ?, ?, ?, ?, ?, ?, ?, ?, ?, ?, ?, ?, ?, ?)

[DBG33] 2017-03-04 12:09:51 Message: Error: An ODBC error occurred,

Additional Message: Function: DICInsRowExecStmt; ODBC operation: SQLExecute
```

For more information, see *Naming Conventions for Log Files*.

Troubleshooting a Synchronization Manager Problem

This topic describes guidelines for resolving problems that you might encounter with Synchronization Manager. It includes the following information:

- *Troubleshooting a Problem That Synchronization Manager Logs in the Log File*
- *Troubleshooting an Initialization or Synchronization Problem*
- *Troubleshooting an Initialization or Synchronization That Requires Too Much Time to Complete*
- *Troubleshooting a Bad Connection During Synchronization Problem*

Troubleshooting a Problem That Synchronization Manager Logs in the Log File

To resolve a problem that problem that Synchronization Manager logs in the log file, look for it in Symptom column in the following table. For more information, see *Naming Conventions for Log Files*.

Symptom	Diagnostic Steps or Cause	Solution
DCK-00123: Error opening file (null) for read.	Possible causes include the following items:	You can do the following:

Symptom	Diagnostic Steps or Cause	Solution
The Synchronization Manager log contains the following error message: `[ERR33] (drl.cpp 5(206) err=1700123 sys=1400022) DCK-00123: Error opening file d:\siebfile\S_DOC_PPSL_0-CQNE_0-S9.saf for read`	• Unable to access the file system folder. • File attachments do not exist in the file system.	• If this problem occurs with only one remote client, then make sure the System DSN is configured correctly. • Verify that the attachments are available in the file system. A Siebel application comes with a set of predefined default templates. Make sure you have copied the files from the `dbsrvr\files` folder to the Siebel File System.
DCK-00164: Error connecting to datasource (null) ((null)) The Synchronization Manager log contains the following error message: `(syncsrvr.cpp 22(692) err=1700213 sys=0)`	The Siebel Gateway service was started while the Siebel Server was shut down.	You can do the following: • Navigate to the Administration - Server Management screen, and then the Components view. • Shut down the Synchronization Manager, and then restart it. • To make sure that Synchronization Manager contains a running state, refresh the applet. For more information, see *Configuring Server Components for Synchronization and Transactions* and *Siebel System Administration Guide* .
DCK-00213: Another Synchronization Server is already servicing this node.	Possible causes include the following items: • A synchronization is interrupted. If a remote client synchronization stops or disconnects abnormally, then the Siebel Synchronization Manager might still be running.	You can do the following: • Configure the TCP/IP timeout on the Siebel Server. Contact your System Administrator for information about the TCP/IP keep alive functionality.
DCK-00214: Directory (null) does not exist	Docking folders of remote clients are deleted.	You can do the following: • To recreate these docking folders to enable the remote client to download the latest snapshot files, you can reextract the users. • Resynchronize with the Siebel Server.

Troubleshooting an Initialization or Synchronization Problem

This topic describes how to troubleshooting an initialization or synchronization problem.

To troubleshoot an initialization or synchronization problem

1. Open a file in the `SIEBEL_CLIENT_ROOT\log` folder:
    - For an initialization problem, open an upgwiz log and the syncthrd log files.

- For a synchronization problem, open a syncthrd log file.

  For more information, see *Log Files on the Remote Client*.

2. Locate the error message in the log file.
3. Search this troubleshooting chapter and My Oracle Support for the error message.
4. If Step 3 does not resolve the problem, then see *Recovering from a Failure* to get more information in the log file.
5. If Step 4, does not resolve the problem, then see *Getting Help from Oracle*. Be prepared to send the log information with the trace information.

Troubleshooting an Initialization or Synchronization That Requires Too Much Time to Complete

This topic describes guidelines for resolving problems if it takes a long time to initialize or synchronize. To resolve the problem, look for it in the Symptom column in the following table.

Symptom	Diagnostic Steps or Cause	Solution
You receive the CSSSISDockFgetACKMsg msg error during initialization or synchronization.	You are working in a network environment and the error might occur due to very heavy network traffic.	Work with your IT department to troubleshoot the problem.

Troubleshooting a Bad Connection During Synchronization Problem

This topic describes how to troubleshoot a problem that occurs when connecting to the Siebel Server during synchronization. If this problem occurs, then Siebel Remote typically displays a message that indicates there is a problem with the connection between the remote client and the Siebel Server.

To troubleshoot a bad connection during synchronization problem

1. Log in to the remote client.
2. Open a DOS command-line window on the remote client.
3. To ping the Siebel Server, run the following command from:

   ```
   ping name_of_the_server_computer
   ```

   If you cannot ping the Siebel Server by name, then try pinging the IP address of the Siebel Server. The expected result is that the ping can resolve the host name to an IP address and connect to the computer.
4. Before attempting to synchronize again, increase the level of tracing on the remote client.

   For more information, see *Recovering from a Failure*.

For help with a connection problem, see *Getting Help from Oracle*. Be prepared to send the syncthrd log file. For more information, see *Log Files on the Remote Client*.

5. If the connection is created on the Siebel Server, or if the Synchronization Manager server component is not running, then examine the Synchronization Manager log file.

   For more information, see *Naming Conventions for Log Files*.
6. Examine the DockConnString in the [LOCAL_SE] section of the configuration file on the remote client.

   For more information, see *Examining the DockConnString Parameter*.
7. If the failure message is Login Failed, then verify that Synchronization Manager references the correct user name and password when it connects to the Siebel database.

   For more information, see *Registering a New Password with the Siebel Gateway*.

Examining the DockConnString Parameter

You can examine the DockConnString parameter. For more information, see *Formatting the DockConnString Parameter*.

To examine the DockConnString parameter

1. Confirm that the DockConnString parameter is set to the host name of the Siebel Server where this client synchronizes.
2. Get help.

   For help with examining the DockConnString, see *Getting Help from Oracle*. Be prepared to send the configuration file. For more information, see *Getting Help from Oracle* and *Modifying the Siebel Configuration File for Siebel Remote*.
3. Modify the port number, if necessary.

   For more information, see *Troubleshooting a Problem with the Port Number*.

Troubleshooting a Problem with the Port Number

You can troubleshoot the port number.

To troubleshoot a problem with the port number

1. Modify the port number.

   For more information, see *Formatting the DockConnString Parameter*.
2. To test the connection, copy a configuration file from a user who can connect or synchronize to the remote client where the connection problem occurs.

   For more information, see *Modifying the Siebel Configuration File for Siebel Remote*.
3. Observe the results and compare the two configuration files for any noticeable differences.
4. If necessary, try other port numbers until you resolve the problem.

Registering a New Password with the Siebel Gateway

The correct user name is the system administrator user for Siebel CRM, or SADMIN. It is not the Siebel database table owner, which is SIEBEL or dbo. The system administrator password for Siebel CRM in the Siebel database must match the password that is registered in the Siebel Gateway. If you modify the password for SADMIN in the Siebel database but not in the Siebel Gateway, then the you cannot log in to the Server Manager views. You must register a new password.

To register a new password with the Siebel Gateway

1. Verify that the Siebel Gateway Name Server service is running.
2. Navigate to the `SIEBEL_ROOT\bin` folder.
3. Open the command line for the Server Manager.
   For more information, see *Opening the Command Line Interface for Server Manager*.
4. Enter the following command:

   ```
   srvrmgr /g gateway_name /e enterprise_server_name /u username /p password
   ```

   where:
   - gateway_name is the host name of the computer that is running the Siebel Gateway
   - enterprise_server_name is the name of the Siebel Enterprise Server
   - username is the user name of the Siebel administrator
   - password is the password of the Siebel administrator

   > **CAUTION:** Be careful if you modify the password. An incorrect entry can cause errors to occur throughout Siebel CRM.

5. When the Server Manager prompt reappears, enter a command like the following:

   ```
   srvrmgr> change ent param Password=NewSADMINPassword
   ```

6. Enter `exit`.
   For an alternative to using Server Manager, see *Registering a New Password with the Siebel Gateway*.
7. Stop and then restart the Siebel Server service.
8. If you have not modified the Siebel database password, then you can use the Server Manager views to modify the system administrator password.

Using Server Configurator Instead of Server Manager

You can use Server Configurator instead of Server Manager.

To use Server Configurator instead of Server Manager

1. Open the command line for Server Configurator.
2. Enter a command like the following:

   ```
   srvrcfg /g gateway_name /e enterprise_server_name /m enterprise /w Password=NewSADMINPassword
   ```

Troubleshooting a Problem Where the User Cannot View Records Locally

There are several reasons why a user might not be able to view a record when connected to the local database.

To troubleshoot a problem where the user cannot view records locally

1. Log in to the Siebel Server with administrator privileges.

   For more information, see *Logging in to the Siebel Database as an Administrator*.
2. Examine the routing model:

   a. Navigate to the Administration - Siebel Remote screen, and then the Mobile Clients view.
   b. Make sure the remote client uses the correct routing model.
   c. Make sure the Receiving Transactions check box contains a check mark.

      If the routing model is set correctly but Receiving Transactions does not contain a check mark, then search the DbXtract log file for errors. It is an indication that the Siebel database extraction did not finish successfully. For more information, see *Naming Conventions for Log Files*.
3. Examine the system preferences:

   a. Navigate to the Administration - Application screen, and then the System Preferences view.
   b. Verify that the following parameter is set to True:

      Enable Transaction Logging

      If this parameter is set to False, then set it to True, and then reextract the remote clients.
4. Examine the Transaction Processor and Transaction Router server components:

   a. Make sure the Transaction Processor and Transaction Router are running.
   b. Examine the log files of the Transaction Processor and Transaction Router for errors.

      For more information, see *Naming Conventions for Log Files*.
5. For limited visibility records, make sure that the record in question is visible in one of the My views when the user is connected directly to the Siebel Server.

   The My Opportunities view is an example of a My view. If a dock object is associated with an organization, opportunity, contact, or service request, and if the records are available through drilldown from a My view, then Siebel Remote routes these records to the user. To find a list of limited objects or objects that are visible in the Siebel Enterprise, you can use Siebel Tools to query the repository. For more information, see *About the Siebel Enterprise and the Siebel Enterprise Server*.
6. To determine if the user possesses visibility to the records, use the Visutl utility and then review the log file that the Visutl utility creates.

   For more information, see *Using the Visutl Utility to Determine Visibility for a User*.
7. Do one of the following:

   - If the Visutl utility reports that the record is not visible, then the record does not reside on the local database. This situation might be a result of how you configured visibility rules. For more information, see *Examining Visibility Rules of the Dock Object*.
   - If the Visutl utility reports that the record is visible, then see *Troubleshooting a Situation Where the Visutl Utility Reports That the Record Is Visible*.

Troubleshooting a Situation Where the Visutl Utility Reports That the Record Is Visible

This topic describes how to troubleshoot a situation where the Visutl utility reports that the record is visible on the local database.

To troubleshoot a situation where the visutl utility reports that the record is visible

1. To verify that the record resides on the local database, use SQL*Plus to log in to the local database.
2. To determine if the record resides on the local database, run the following query:

   ```
   Select * from SIEBEL.TABLENAME where ROW_ID = 'Row id of the record that is not visible'
   ```

3. If the record resides on the local database but is not visible through the user interface, and if you use a custom Siebel runtime repository, then try to log in to the Siebel application using the predefined Siebel runtime repository.

   If the records are visible, then something in the configuration is filtering out the records and you must investigate the configuration.
4. To identify the configuration that filters out the records that must be visible, start the Siebel application in the Siebel Developer Web Client, using the -s option, and then examine the query or joins that the application runs.

   The -s option spools out the SQL that the Siebel application runs on the view that does not display the record. For more information, see the following items:

   - *About the Siebel Enterprise and the Siebel Enterprise Server*.
   - For more information about using the -s option to examine the SQL that a Siebel applications creates, see the *Siebel Installation Guide* and *Siebel Performance Tuning Guide* .
5. If the record does not reside on the local database, then this situation indicates a potential problem with the server processes that Siebel Remote uses. You can do the following:

   a. Confirm that the user synchronized successfully with the Siebel Server.
   b. Examine the syncthrd log files for errors.

      For more information, see *Log Files on the Remote Client*.
   c. If transaction, routing and synchronizing are fine, then reextract the user and determine if the record is visible after the reextraction.

Requesting Assistance If the Visutl Utility Reports That the Record Is Visible

You can request assistance if the Visutl utility reports that the record is visible on the local database.

To request assistance if the Visutl utility reports that the record is visible

1. Create two transactions that Siebel Remote must display in the remote client.
2. Start the Transaction Processor.
3. Start the Transaction Router with the following event settings:

```
GenericLog=4, Trace=4, SqlparseandExecute=4
```

4. Get help from Oracle.

   For help with troubleshooting a situation where the Visutl utility reports that the record is visible, see *Getting Help from Oracle*. Be prepared to send the following files with your service request:

   - The visutl.log that is located in the current folder where you run the Visutl utility.
   - The log files of the Transaction Processor and Transaction Router server components. For more information, see *Naming Conventions for Log Files*.
   - The DX files that reside in the following folder:

     ```
     SIEBEL_ROOT\docking\client\outbox
     ```

Examining Visibility Rules of the Dock Object

You can examine the visibility rules of the dock object to identify the rules that determine if a user can view a record on the local database.

To examine visibility rules of the dock object

1. On the Siebel Server, log in to Siebel Tools.
2. Click the Flat tab in the Object Explorer, and then navigate to the Dock Object Table.
3. Click the Types tab and then expand the object type named Dock Object.
4. Choose the Dock Object Visibility Rule object type.
5. In the Dock Object Visibility Rule list, scroll to the Comments property.
6. In the Comments property, examine the description that Siebel Tools displays for each rule that is associated with the dock object.

Troubleshooting an Unexpected Read-Only Field

If Siebel Remote displays a read-only field in the remote client, and if your implementation does not expect Siebel Remote to display this field, then it is recommended that you get help from Oracle. For more information, see *Getting Help from Oracle*.

Troubleshooting a Large Transaction Backlog Problem

This topic describes how to troubleshoot the following situations:

- The S_DOCK_TXN_LOG table contains a large number of rows.
- There are a large number of DX files in the `docking\txnproc` folder.

If the Enable Transaction Logging system preference is TRUE, then the Siebel application records transactions to the S_DOCK_TXN_LOG transaction log table. The Transaction Processor server component deletes entries from this table

after it copies the transactions to the `docking\txnproc` folder on the Siebel Server. Siebel Remote routes visible data across the Siebel Enterprise to the active remote clients.

A *transaction backlog* is a situation that occurs if any of the following situations is true:

- A large number of transactions exist in the S_DOCK_TXN_LOG table.
- A large number of DX files reside in the `docking\txnproc` folder.

To view the backlog in the S_DOCK_TXN_LOG table, you can run the following SQL query:

```
select count (TXN_ID) from S_DOCK_TXN_LOG
```

To determine the oldest transaction, you can run the following SQL query:

```
select min(CREATED) from S_DOCK_TXN_LOG
```

A backlog of 1000 transactions is not typically considered a problem.

For more information about:

- Avoiding a backlog when deactivating remote clients, see *Deactivating a Large Number of Remote Clients*.
- The S_DOCK_TXN_LOG table, see *Modifying the S_DOCK_TXN_LOG Table*.
- Transaction Router Performance Issues:
  Symptom or Error Message: The Transaction Router Siebel Remote server task may fail or exhibit slow performance under certain conditions which will cause a backlog in the transactions to be routed to Siebel Remote mobile users and regional nodes. Symptoms of a Transaction Router performance issue may include: Mobile users or connected users working on a regional node report that they're not seeing up-to-date data. There are a large number of .dx files in the SIEBEL_ROOT\Siebsrvr\Docking\txnproc folder. Increased memory usage of the Transaction Router process may eventually cause it to error.
  Cause: At a high level there are three main causes of apparent Transaction Router performance problems:
  a. Visibility related transactions. These are most commonly created by position changes made via the user interface or EIM, and running Generate Reporting Relationships.
  b. Docking rules and data distribution.
  c. Slow running queries.
  Monitoring Performance: The first step in diagnosing a Transaction Router performance issue is to determine the severity of the problem. Determine if transactions are just being routed slowly, or if mobile users and regional nodes are receiving no transactions at all. Please work with your DBA for database performance and refer to My Oracle Support.

To troubleshoot a large transaction backlog problem

1. Log in to the Siebel Server with administrator privileges.
   For more information, see *Logging in to the Siebel Database as an Administrator*.
2. Make sure the Transaction Processor server component and all Transaction Router server components are running.
3. Navigate to the Administration - Server Management screen, and then the Server Tasks view.
4. Locate tasks for the Transaction Processor and Transaction Router server components.
5. Examine the Task State and Status for each record you locate in Step 4.
   The following value is the correct value for Task State for the Transaction Processor and the Transaction Router:
   Running

Each Siebel Server requires at least one Transaction Processor, Transaction Router, and Transaction Merger. Multiple Transaction Routers and Transaction Mergers can run on one Siebel Server. It is recommended that you run multiple Transaction Routers, when necessary.

6. Make sure the Transaction Processor is processing transactions:
   a. Navigate to the Administration - Siebel Remote screen, and then the Processor Status view.
   b. Examine the information that describes the last transaction and the last file.

      The Transaction Processor creates this information in the `docking\txnproc` folder on the Siebel Server. These values increase continuously in typical situations and when no problems exist.
7. Expire the Transaction Processor entries that are obsolete.

   Transaction Processor entries that are obsolete might exist in the S_NODE table. The transactions remain active after an upgrade or they are possibly associated with a Siebel Server that is no longer in use. To expire Transaction Processor entries that are not required, it is recommended that you enter an end date that has already occurred.
8. Expire each Transaction Processor that is obsolete.

   For more information, see *Administering Monitoring and Logging*.
9. If you have recently modified the positional hierarchy or to territories, then reextract the remote clients.

   For more information, see *How Positions, Organizations, and Responsibilities Affect Access*.
10. If you are using EIM, then set the LOG TRANSACTIONS TO FILE parameter to FALSE.

    For more information, see *Using EIM to Create Multiple Siebel Remote Clients*.
11. Examine the indexes on the S_DOCK_TXN_LOG table and the S_DOCK_TXN_SET table.

    The P1 index is on an ID column that increments. Siebel Remote deletes lower IDs. Index leaf rows might reference rows that no longer exist. It is recommended that you regularly rebuild the indexes in the following tables:

    - S_DOCK_TXN_LOG
    - S_DOCK_TXN_SET
12. If Siebel CRM is still experiencing a backlog, get help.

    For help with handling a large transaction backlog, see *Getting Help from Oracle*. Be prepared to send the log files of the Transaction Processor and Transaction Router server components with the following flags set:

    - Use Server Manager to modify the following log events:
      - evtloglvl sql=4
      - sqlParseandExecute=4
      - genericlog=4

      For more information, see *Naming Conventions for Log Files* and *Configuring Traces for a Server Component*.
    - Run the Siebel Remote component with the following values:
      - SQL Flag=2
      - Trace Flag=1

Troubleshooting Transaction Router Performance Issues

The Transaction Router Siebel Remote server task might fail or exhibit slow performance, causing a backlog in the transactions routed to Siebel Remote mobile users and regional nodes.

Symptoms or Error Messages with Transaction Router Performance Issues

Symptoms of a Transaction Router performance issue might include:

- Mobile or connected users working on a regional node report that they're not seeing up-to-date data.
- There are numerous `.dx` files in the `SIEBEL_ROOT\Siebsrvr\Docking\txnproc` folder.
- Increased memory usage of the Transaction Router process could eventually cause it to error.

Causes of Transaction Router Performance Issues

Here are three main causes of clear Transaction Router performance problems:

- Visibility-related transactions

  These are most commonly created by position changes made in the UI or EIM. They can also be caused by running Generate Reporting Relationships.
- Docking rules and data distribution
- Slow running queries

Diagnostic Steps for Transaction Router Performance Issues

Monitoring Performance

The first step in diagnosing a Transaction Router performance issue is to identify the severity of the problem. Decide if transactions are just being routed slowly, or if mobile users and regional nodes are receiving no transactions at all.

To monitor Transaction Router performance, run the following SQL statement every 30 minutes on the Siebel server. This SQL statement provides, most importantly, the number of outstanding transactions to be routed to each node, along with the time when a particular node was last routed to:

```
SELECT NAME NODE, LAST_TXN_NUM, A.MAX_TXN_ID - LR.LAST_TXN_NUM TXNSTOROUTE, TO_CHAR (LR.LAST_UPD, 'DD-MON-YY
 HH24:MI:SS') LASTROUTED
FROM S_NODE N, S_DOCK_STATUS LR,
(SELECT MAX(TXN_ID) MAX_TXN_ID FROM S_DOCK_TXN_LOG) A
WHERE N.EFF_END_DT IS NULL
AND LR.NODE_ID = N.ROW_ID AND LR.TYPE = 'ROUTE' AND
LR.LOCAL_FLG = 'Y' AND LR.LAST_TXN_NUM != -1
ORDER BY LR.LAST_TXN_NUM;
For MS SQL Server and DB2
SELECT NAME NODE, LAST_TXN_NUM,
A.MAX_TXN_ID - LR.LAST_TXN_NUM TXNSTOROUTE,
LR.LAST_UPD LASTROUTED
FROM S_NODE N,
S_DOCK_STATUS LR,
```

```
(SELECT MAX(TXN_ID) MAX_TXN_ID FROM S_DOCK_TXN_LOG) A
WHERE N.EFF_END_DT IS NULL
AND LR.NODE_ID = N.ROW_ID AND LR.TYPE = 'ROUTE' AND LR.LOCAL_FLG = 'Y' AND LR.LAST_TXN_NUM != -1
ORDER BY LR.LAST_TXN_NUM
```

Review the results returned by the SQL statement, along with all the Transaction Router log files. In Siebel applications version 6.x, 7.x and 8.x, the log files are `TxnRoute*.log`. In Siebel applications version 5.x, they're `TxnRoute*.trc`.

Examples of the Diagnostic Information in Transaction Router Performance Issues

Here are examples of the diagnostic information that can be gathered to help in identifying the causes listed above:

Visibility-Related Transactions

If the cause is visibility-related transactions, the Transaction Router log files usually won't contain any errors. Mobile users will be receiving transactions, but most likely at a reduced rate, for example:

- `2002-02-07 15:44:48 Client: DALEYJ, Read 49 files (102448-102496), Wrote 3 files (71905-71907)`
- `2002-02-07 15:44:48 Txns Read: 16505, Opers Read: 18290, Vis Opers Written: 532`
- `2002-02-07 15:44:48 Found 5994 Vis Event Opers, Found 4188 Vis Rel Event Opers`
- `2002-02-07 16:13:55 2002-02-07 16:13:55 Client: COWANC, Read 0 files (102448-102447)`
  This log file shows this particular Transaction Router task processing 49 .dx files (00102448.dx to 00102496.dx) in the `SIEBEL_ROOT\Siebsrvr\Docking\txnproc folder` for one node named `DALEYJ`. It took nearly 30 minutes to write three .dx files to this node's `\outbox` directory. Note that there several Visibility Related Event Operations (4188) that cause the Transaction Router to perform additional visibility checks against the database and can subsequently cause additional data downloads to the node.

The next step is to check the contents of the .dx files being read by the Transaction Router using `txnutl`. In the above example, you'd check files `00102448.dx` to `00102496.dx`. For more instructions on using this utility, see *Document KB562098*. Once the .dx files have been translated with `txnutl`, check the contents for insert, update, and delete transactions on the following tables:

- S_NODE_REL
- S_NODE_EMP
- S_POSTN_RPT_REL
- S_POSTN
- S_EMP_POSTN
- S_SHARED_EMP
- S_ORG_INT

Transactions on these tables can significantly affect Transaction Router performance -- this is expected behavior. Note that transactions on other tables might cause the Transaction Router to perform additional visibility checks against the database, but these tables are known to have a significant impact on performance.

Docking Rules and Data Distribution

If the cause is docking rules and data distribution, the Transaction Router log files might appear to hang at Iteration 0 where the last entry in the Transaction Router log files details the .dx file and transaction being processed, for example:

- `2002-02-01 18:12:57 ***** Iter: 0`

- `2002-02-01 18:12:57 TxnProc lroute: file 3321, txn id 7264908`

The Transaction Router might then continue to process without errors or might fail with error messages including:

- SBL-CSC-00106: Invalid file header expecting Siebel Tall/Skinny File
- SBL-CSC-00120: Not enough space in buffer cache
- SBL-CSC-00200: Cannot acquire spinlock hashWrite
- SBL-CSC-00301: Invalid value 0 for argument pVisDataInfo->createLatch

These error messages indicate that that the shared visibility database `visdata.dbf` is corrupt. If there are multiple Transaction Router tasks running on the Siebel server, all the log files should be reviewed for the above errors, because it's most likely that only one of them will contain the above error, while the others will contain the following:

SBL-CSC-00213: Invalid visibility database. Shutdown and restart **all** routers to rebuild.

If these above symptoms are seen, it's likely that mobile users and regional nodes will be receiving very few or no transactions. Docking rules and data distribution are the most likely cause. To confirm this, gather the following:

- Start a single Transaction Router task and have a DBA perform an RDBMS trace on the Transaction Router task
- Run the `visrule` script for the appropriate version of Siebel against the server database, following the directions below appropriate to your version of Siebel applications.

For Siebel 7 and 8: For Siebel 7 and 8 you can use a utility, `visrulediag`, to generate these scripts automatically. To generate a script using this utility, open a command prompt and navigate to the `SIEBEL_ROOT\SiebSrvr\bin` directory. Run `siebenv set` to set the environment parameters and issue the following command:

```
>visrulediag /U username /P password /C datasource /D tableowner /M G
```

The `/M G` specifies to generate a SQL script. By default the threshold value `/T` will be 1000. At this point the utility will prompt for the dock objects. For this troubleshooting step, enter: `>all`.

This will generate the script to a file called visrulediag.sql in the SIEBEL_ROOT\SiebSrvr\bin directory. Run visrulediag.sql against the server database and send the results to Technical Support for review.

Slow Running Queries

If the cause is slow running queries, the Transaction Router log files usually won't contain any errors and mobile users will be receiving transactions, but most likely at a reduced rate, for example:

- `2001-12-11 16:03:17 Client: MENZIEJ2, Read 0 files (18354-18353), Wrote 1 files (7426-7426)`
- `2001-12-11 16:03:17 Txns Read: 24, Opers Read: 1047, Vis Opers Written: 3`
- `2001-12-11 16:03:17 Found 0 Vis Event Opers, Found 0 Vis Rel Event Opers`
- `2001-12-11 16:08:18 Client: COLLIEJ2, Read 0 files (18354-18353), Wrote 1 files (5750-5750)`

  This shows this particular Transaction Router task processing two .dx files (0018354.dx to 0018353.dx) in the `SIEBEL_ROOT\Siebsrvr\Docking\txnproc` folder, for one node named `MENZIEJ2`. It took over 5 minutes to write one .dx file to this node's \outbox directory. Note there are no Visibility Related Event Operations, so this indicates that there might be a performance issue with a query being executed by the Transaction Router.

Queries can run slowly for many reasons including missing or corrupt indexes, table fragmentation, insufficient resources, and underlying RDBMS problems.

To investigate further, start a single Transaction Router task and have a DBA perform an RDBMS trace on the Transaction Router task. Review the RDBMS trace to decide if there are any long running queries that could be impacting the Transaction Router's performance, for example:

- Be suspicious of long running queries that return few rows instead of long running queries that return many rows.
- If there are several long running queries, be suspicious if all these queries involve a common table.

Solutions to Transaction Router Performance Issues

To improve Transaction Router performance, there are some initial steps that you should take:

- First, check that the paging file size on all Siebel server machines is 1.5 times the amount of physical RAM available. Also, monitor the CPU and memory usage on the Siebel server and database server machines for high utilization of either resource.
- Second, set the following Component parameters at the Transaction Router Component level:

  ```
  Id Db Size: 409600

  Node Division Factor: X
  ```

  `Id Db Size` specifies the size of the shared visibility database. The maximum is 409600. Don't increase the size of `Id Db Size` above 409600. `X` equals the number of Transaction Router tasks that will be running on that application server. The first Transaction Router task should be started with the additional parameter `Id Db Recreate: TRUE`.

  This will recreate `visdata.dbf` with the increased size above. It can improve Transaction Router performance. Later Transaction Router tasks can be started after the defaults have been set at the component level.

  > **Note:** Starting in Siebel Version 8.x, both Transaction Processor and Transaction Router use the shared visibility database `visdata.dbf`, so make sure that the `Id Db Size` parameter is the same for both components

If the above steps don't help improve Transaction Router performance, the following options are available for each of the identified causes:

- Visibility-Related Transactions: If the cause of the Transaction Router performance problem is visibility-related transactions, then there are two possible solutions:
  - Re-extract all mobile users and regional nodes.
  - Allow the Transaction Router server tasks to continue processing until the backlog is cleared. The backlog of transactions to route to each node will most likely increase until the Transaction Router has processed all the visibility-related transactions, and then the backlog will reduce more quickly. Starting more Transaction Router tasks will also increase performance, but be careful not to overload the Siebel server or database server machine by starting too many Transaction Router tasks.

- Docking Rules and Data Distribution: If the cause of the Transaction Router performance problem appears to be docking-rule related, log a Service Request with Siebel Technical Support and send the following diagnostic information in for review:
  - RDBMS trace of the Transaction Router task
  - Transaction Router log file
  - .dx files the Transaction Router is processing from the `SIEBEL_ROOT\siebsrvr\Docking\txnproc directory`
  - The results of the `visrule` script
- In Siebel applications version 6.x, there were a few specific examples of docking rules causing Transaction Router performance problems:
  - In Siebel 2000, the Product Dock Object was changed to be of type Limited visibility rather than Enterprise. This has caused some customers to find Transaction Router performance issues particularly if there are numerous Assets associated with Products. Siebel Systems has recommended in some instances that the Product Dock Object should be set to Enterprise visible, which means that all Products will be downloaded to mobile users and regional nodes. In other instances, specific docking rules have been deactivated. The appropriate action depends on a particular customer requirements and data distribution.
  - Transactions that update the table `S_SRC`, which is part of the Source Dock Object, are incorrectly treated as a visibility-related events, causing the Transaction Router to perform unnecessary visibility checks.
  - Other docking rules have caused Transaction Router performance problems caused by data distribution, including rules for the Order and Organization Dock Objects.
- Slow Running Queries: If the cause of the Transaction Router appears to be a poorly performing query, then work with the DBA to see if there are any obvious underlying RDBMS reasons:
  - Check that all the indexes are present and valid on the tables involved in the poorly performing queries. Check the relevant version of the Siebel Data Model to decide which indexes should be present.
  - Check that the tables and indexes involved in the poorly performing queries aren't heavily fragmented.

Important Notes Around Solutions to Transaction Router Performance Issues

Here are some notes related to the solutions listed for resolving Transaction Router Performance Issues:

- The causes aren't an exhaustive list of potential Transaction Router performance issues.
- The causes aren't mutually exclusive. If you diagnose one cause, you should continue to investigate to ensure there are no more issues.
- You should also try to eliminate any other potential environment issues including operating system and network problems.
- Siebel strongly recommends that customers fully benchmark the Transaction Router performance with realistic data quantities before going into production with a new release or making significant changes in the amount or type of data to be routed to mobile users and regional nodes.

  For example, in production, you might plan to have 1,000 mobile clients and to regularly load 500,000 accounts via EIM, followed by running Batch Assignment. Fully test this scenario out in a test environment before rolling it out to your production environment. Similar testing should be carried out in a test environment when changing the Organizational hierarchy to avoid meeting a Transaction Router performance issue in your production environment.

Recovering from a Failure

Siebel Remote is designed to minimize the impact of a software, communications, or hardware failure. This topic describes the most likely failures you might encounter and how to recover from them. It includes the following information:

- *Recovering from a Failed Siebel Server*
- *Recovering from Failed Media That Resides on the Siebel Server*
- *Recovering from Corrupted Transactions That Reside on the Siebel Server*
- *Recovering from a Failed Siebel Database*
- *Recovering from Truncated or Deleted Siebel Database Records*
- *Recovering from Failed Media That Resides on a File Server*
- *Restoring the File System After Recovering from a Previous Image*
- *Recovering from a Failed Local Database*
- *Recovering from a Failed Client Initialization*
- *Recovering from a Failed Transmission*

Recovering from a Failed Siebel Server

Programs on the Siebel Server can recover automatically from a failure on the Siebel Server.

To recover from a failed Siebel Server

- After returning Siebel CRM to an operational state, you can use the Server Manager to restart the server components.

  For more information, see *Siebel System Administration Guide* .

Recovering from Failed Media That Resides on the Siebel Server

A head failure or other media failure that involves the Siebel Server might result in an unusable Siebel database. For more information, see *Protecting Against a Media Failure*.

To recover from failed media that resides on the Siebel Server

1. Stop the following server components on the Siebel Server:
   - Transaction Router
   - Transaction Merger
   - Transaction Processor
2. Use the Server Manager to disable the Synchronization Manager.
3. Wait for the Siebel database administrator to return the Siebel Server to an operational state.

4. If the Transaction Router server component sent data to any remote clients after the most recent backup of the Siebel database was performed, then you must reinitialize the local database for each remote client who received data after the last backup:
   a. To determine if a remote client is not processed because of a corrupted file, you can examine the log file of the Transaction Router server component.

      If the log indicates that the dobjinst.dbf visibility database is corrupt, then you must reextract the Siebel database for the user that the log identifies. It might be necessary to delete the local database. For more information, see *Example Where You Must Delete the Local Database* and *Naming Conventions for Log Files*.
   b. Notify users to reinitialize their local databases.

      For more information, see *Extracting the Server Database*.
   c. Run Database Extract for the affected clients.
   d. Notify each user that Siebel Remote will reinitialize the local database the next time the user synchronizes.

      This is a potentially time-consuming step. The user might be required to reinitialize at different times. For example, to reduce download time, users who are located close to a field office might be required to use a LAN connection. Other users might be required to reinitialize during times when network traffic is reduced. For more information, see *Initializing the Local Database*.

Example Where You Must Delete the Local Database

A database extract might not be sufficient to restore a local database. For example, assume the following sequence of events occurs:

1. On Monday a backup starts for user A and user B.
2. On Tuesday user A synchronizes.
3. On Wednesday the local database for user A becomes corrupt.
4. To restore the local database for user A, Siebel Remote uses the Monday backup.
5. Siebel Remote starts a database extract for users A and B.
6. User B synchronizes without error.
7. User A receives a mismatch error because the routed values between the remote client and the Siebel Server are different.
8. User A must delete the local database before this user acquires a new local database.

Protecting Against a Media Failure

It is strongly recommended that you run your Siebel Server with a redundant disk configuration. If a device fails that contains inbox and outbox folders for remote clients, then a redundant configuration can minimize data loss.

To protect against a media failure, it is strongly recommended that your database administrator take preventive measures. For example:

- Use disk mirroring
- Use online backups
- Use RAID (Redundant Array of Independent Disks)

If restoring the Siebel database results in a permanent loss of transactions from the Siebel Server, then the Transaction Router server component might have routed some of those lost transactions to remote clients before the failure occurred. To complete a full recovery, it might be necessary for you to resynchronize the Siebel database with the local database.

Recovering from Corrupted Transactions That Reside on the Siebel Server

If a media failure corrupts a file on a Siebel Server, then you must do the procedure that this topic describes. A media failure on a Siebel Server can seriously disrupt synchronization. After the Transaction Router server component routes transactions to files on the Siebel Server, the Transaction Processor deletes those transactions from the master transaction table on the Siebel database. For more information, see *Protecting Against a Media Failure*.

To recover from corrupted transactions that reside on the Siebel Server

1. Fix the folders on the disk.
2. Instruct the user to send modifications to the Siebel Server.
3. Make sure the Transaction Merger server component applies to the Siebel database those transactions that the users send in Step 2.
4. Run Database Extract for each affected client.

   For more information, see *Extracting the Server Database*.
5. Reinitialize the local database for each affected client.

   For more information, see *Initializing the Local Database*.

Recovering from a Failed Siebel Database

If the RDBMS fails, then the Siebel database administrator must diagnose and correct the problem. When Siebel CRM returns to an operational state you can use the Server Manager to restart the server components that Siebel Remote uses. These components automatically recover their process states from the last committed transaction. A reextraction of the remote clients might be required in the following situations:

- If the Siebel database recovered up to the point of failure, then no action is required because there is no loss of data.
- If the Siebel database recovered up to a time that occurs before the point of failure, then you must reextract and reinitialize all remote clients. In this situation, you do the procedure that this topic describes.

To recover from a failed Siebel database

1. Restore the Siebel database from a backup.
2. Disable the Synchronization Manager server component.
3. Stop any tasks that are running for the following server components:
   - Transaction Router
   - Transaction Merger
   - Transaction Processor
4. Reextract all remote clients.
5. Start the Transaction Processor task.
6. Start the Transaction Router and Transaction Merger tasks.
7. Enable the Synchronization Manager server component.

8. If the user synchronized between the time the backup was completed and the time that the failure occurred, then you must clean up the reinitialize the local database, as follows:

   a. Log into the local database and execute the following command:

      ```
      delete from SIEBEL.s_app_ver;
      ```

   b. Reinitialize the remote client.

   Any modifications in the local database that were not sent to the Siebel Server are lost.

   If the Siebel database extract was run with the Save Client Transaction parameter set to TRUE, then none of the remote client modifications are lost.
9. If the user synchronized before the backup was completed, then you can download a new database for the remote client.

Recovering from Truncated or Deleted Siebel Database Records

If records are truncated or deleted on the Siebel database, and if Siebel Remote sends these transactions to the remote clients, then you cannot modify or reverse this situation. Even if you restore the Siebel database, the restoration causes a data mismatch and corruption.

To recover from truncated or deleted Siebel database records

1. Restore the Siebel database to the time it failed.
2. Reextract all users.

   For more information, see *Extracting the Server Database*.

Recovering from Failed Media That Resides on a File Server

The Siebel file server stores file attachments, such as literature files and correspondence files. A literature file is typically static and can be recovered from the most recent backup. File attachments that are created after the last backup might be lost. It is strongly recommended that you protect against a media failure. For more information, see *Protecting Against a Media Failure*.

Restoring the File System After Recovering from a Previous Image

If you recover the docking folder and file system from a previous image, then the docking folders might contain data that Siebel Remote already sent to the remote client or to the Siebel Server.

To restore the file system after recovering from a previous image

1. Restore the file system.

2. Stop any tasks that are running for the following server components:
    - Transaction Router
    - Transaction Merger
    - Transaction Processor
3. Remove all subfolders under the `SIEBEL_ROOT\docking` folder, except the `txnproc` folder.
4. Reextract all remote clients.
5. Start the Transaction Processor server component.
6. Start the Transaction Router and Transaction Merger server components.
7. Reinitialize all remote clients.

    For more information, see *Initializing the Local Database*.

Recovering from a Failed Local Database

The information that the local database contains is a subset of the information that the Siebel database contains. It is not practical to back up a remote client. Any modification that the user makes on the local database since Siebel Remote performed the last docking is lost. It is strongly recommended that the synchronization with the Siebel Server runs regularly. If a laptop or local database fails, then you must reextract and reinitialize the local database.

To recover from a failed local database

- Reextract and reinitialize the local database for the remote client that experienced the failure.

    For more information, see *Extracting the Server Database* and *Initializing the Local Database*.

If a local database becomes unusable because of a media failure or other event, then you must extract the Siebel database for the remote client. Siebel Remote does not support restoring a local database because it might result in inconsistency between the local database and the Siebel database.

If the remote client loses power during a merge, then the local database might be corrupted. To avoid this situation, you must make sure the remote client possesses sufficient power before doing a synchronization.

Modifications Users Have Not Synchronized

Depending on the kind of failure, if the user modifies the database or file attachments on the remote client, and if Siebel Remote has not synchronized these modifications, then these might be lost. In this situation, the user must reenter these modifications.

Recovering from a Failed Client Initialization

This topic describes how to recover from a failed client initialization when the initialization cannot be resumed.

To recover from a failed client initialization

1. On the remote client, navigate to the `SIEBEL_ROOT\bin` folder.
2. Delete the upgwiz.ucf file.
3. Delete all files that exist in the following folders:

- `SIEBEL_ROOT\upgrade`
- `SIEBEL_ROOT\local`

4. Rerun the initialization.

Recovering from a Failed Transmission

A remote client can experience an occasional transmission failure. The Siebel Remote Synchronization Client and Synchronization Manager examine and verify the integrity of every Siebel Remote transmission. If they detect an error, then Siebel Remote automatically resends the files until the synchronization is successful.

Using Troubleshooting Utilities

This topic describes utilities that you can use to assist with troubleshooting. It includes the following information:

- *Using the Endtxnutl Utility to Adopt Orphaned Records*
- *Using the Txnskip Utility to Examine Skipped Transactions*
- *Using the Txnutl Utility to Examine Corrupt Transactions*
- *Using the Txnutlr Utility to Create Statistics*
- *Using the Visutl Utility to Determine Visibility for a User*
- *Configuring Session Parameters for a Utility*

Using the Endtxnutl Utility to Adopt Orphaned Records

This topic describes how to use the Endtxnutl utility to create parent records so that orphan records synchronize. A database transaction can create an orphan record, which is a type of child record that is not associated with a parent record. The Transaction Processor server component treats an orphan record as an incomplete transaction that Siebel Remote must not synchronize. Orphan records also cause the transaction log table (S_DOCK_TXN_LOG) to grow and degrade performance.

It's recommended that you frequently use the Endtxnutl utility, depending on how frequently the data traffic creates orphan records. You can run endtxnutl as often as you require without interrupting Siebel Remote operations. Siebel Remote runs endtxnutl one time every 24 hours, by default.

To use the Endtxnutl utility to adopt orphaned records

1. Configure parameters for the session. For more information, see *Configuring Session Parameters for a Utility*.
2. To run the Endtxnutl utility, enter the following command in a single line:

```
endtxnutl /u username /p password /a Siebel_server_name /T minimum_transaction_age_in_hours /
o output_file_name
```

Use parameters described in the following table.

Parameter	Required	Description
u username	Required	The login name for the administrator.
p password	Required	The password for the administrator.
a Siebel_server_name	Required	The name of the remote server that the Endtxnutl utility uses to scan for transactions in the S_DOCK_TXN_LOG table that include routing and docking information.
t minimum_transaction_age_in_hours	Optional	The Endtxnutl utility runs only on orphan records from transactions that Siebel Remote started at least by the number of hours that you specify in this parameter. The default value is 24. The range of acceptable values is from 24 through 168.
o output_file_name	Optional	If you do not specify a path, then the Endtxnutl utility creates the endtxnutl.out output file in the current folder.

The following is an example of a typical command that runs the Endtxnutl utility:

```
endtxnutl /u sadmin /p pwd /a siebsrvr17 /o d:\endtxnutl.out
```

where:

- Endtxnutl is the name of the utility.
- `sadmin` is the user name.
- `pwd` is the password.
- `siebsrvr17` is the name of the Siebel Server.
- `d:\endtxnutl.out` is the name of the output file.

How the Endtxnutl Utility Finds an Adoptive Parent

The Endtxnutl utility scans the S_DOCK_TXN_LOG table for transactions that do not contain a committed parent transaction and that are at least a set number of hours old. For each transaction that meets these criteria, endtxnutl inserts a dummy parent transaction in the transaction log. When the Transaction Processor detects the inserted parent transactions, it processes the child records correctly.

Situations That Create Orphans

The following situations might result in the creation of an orphan record:

- Using Siebel Audit Trail on the Products business component
- Using Siebel Audit Trail on the Admin Sales Tool business component
- Using Siebel Audit Trail on business components that use the CSSBCUser class
- Importing a Product Model
- Defining remote clients and Positions
- Failure of a server component

Querying for Orphan Records

To examine orphan records in the Siebel database, you can use an SQL query. This query locates rows in the S_DOC_TXN_LOG table that meet any of the following conditions:

- Row ID is not equal to the parent transaction ID
- The parent transaction ID does not equal the row ID of any other row in the table

To query for orphan records

1. Query for the orphaned records:
   - To query in Oracle Database, use the following command:

     ```
     SELECT B.TXN_ID, B.ROW_ID, B.PAR_TXN_ID, B.OPERATION, B.ITEM_NAME FROM
     S_DOCK_TXN_LOG A, S_DOCK_TXN_LOG B WHERE A.ROW_ID(+) = B.PAR_TXN_ID AND
     A.ROW_ID IS NULL
     ```

   - To query in IBM DB2 or Microsoft SQL Server, use the following command:

     ```
     SELECT B.TXN_ID, B.ROW_ID, B.PAR_TXN_ID, B.OPERATION, B.ITEM_NAME FROM
     S_DOCK_TXN_LOG A RIGHT OUTER JOIN S_DOCK_TXN_LOG B ON B.PAR_TXN_ID = A.ROW_ID
     WHERE A.ROW_ID IS NULL
     ```

2. If you find a gap in transaction ID numbers, then use the Txnskip utility.

   An orphan record does not necessarily cause a gap in transaction ID numbers. For situations where you find a gap, you can use the Txnskip utility instead of the Endtxnutl utility. For more information, see *Using the Txnskip Utility to Examine Skipped Transactions*.

Troubleshooting Errors in the S_DOCK_TXN_LOG table

This troubleshooting guide contains information to help you monitor and manage the transaction backlog for your Siebel Remote implementation. Specifically, it helps you troubleshoot errors in the `S_DOCK_TXN_LOG`.

Overview

If Transaction Logging is enabled, the Siebel application records transactions to the `S_DOCK_TXN_LOG` table for later routing to mobile web clients. Before Siebel version 8.0, Transaction Logging was enabled by setting the system preference, Docking: Transaction Logging, to True in Administration - Application > System Preferences. Beginning in version 8.0, Transaction Logging is enabled using the checkbox, Enable Transaction Logging, in Administration - Siebel Remote > Remote System Preferences. Normally, the volume of records in `S_DOCK_TXN_LOG` is about 2,000. However, this number can increase in the event of large data loads or activity.

"Backlog" represents the outstanding transactions or .dx files that await processing and routing by Siebel Remote. Backlog is the difference between the lowest, last routed transaction and the maximum transaction in the S_DOCK_TXN_LOG table. Backlog is evident by an increase in the volume of records in the S_DOCK_TXN_LOG table or a build-up of .dx files in the \txnproc folder. To check the volume of records in S_DOCK_TXN_LOG, run select count(*) from S_DOCK_TXN_LOG against the server database.

The Transaction Processor (TXNPROC) is responsible for deleting records from S_DOCK_TXN_LOG and .dx files from the \txnproc folder, once the Transaction Router has successfully routed these transactions to all mobile web clients for the Siebel Remote Server.

The Transaction Processor determines the minimum TXN_ID record in the S_DOCK_TXN_LOG table. It compares this value to the minimum LAST_TXN_ID record in the S_DOCK_STATUS table where TYPE = ROUTE and LOCAL_FLG = Y for mobile web clients on the remote server.

If the transaction hasn't yet been routed – and the minimum LAST_TXN_ID is less than the minimum TXN_ID – then there's no deletion. If the transaction has already been routed – and the minimum LAST_TXN_ID is greater than the minimum TXN_ID – then deletion takes place and the transaction is purged from the S_DOCK_TXN_LOG table.

Symptoms, Errors, and Causes

In a healthy Siebel Remote environment, the minimum TXN_ID in the S_DOCK_TXN_LOG table should continue to increase over time. If the minimum TXN_ID doesn't continue to increase and the total volume count continues to grow, review this section for possible causes.

Causes

There are several reasons why your transaction backlog could grow. These reasons might include:

- The Transaction Process and Transaction Router tasks aren't running
- The Transaction Processor isn't processing transactions
- Obsolete Transaction Processors
- Failed client extracts
- Incomplete mobile web client setup
- Orphaned transactions
- Inactive mobile users
- Transaction Router performance issues
- Recent changes to position hierarchy, territories, or large EIM loads

Diagnostic Steps and Solutions

Review this section for diagnostic steps and solutions.

Complete the following steps to diagnose why your transaction backlog might be growing.

1. Verify that the Transaction Processor and Transaction Router tasks are running.
   The Transaction Processor task, TXNPROC, reads the S_DOCK_TXN_LOG table and creates .dx files in the \txnproc folder.
   The Transaction Router task, TXNROUTE:
   - reads the .dx files from the TXNROUTE folder;
   - determines which mobile web clients on the remote server have visibility to these transactions; and

- creates .dx files with that data in each mobile web client's `DOCKING..\Outbox` folder on the server.

Also note:

- Both `TXNPROC` and `TXNROUTE` need to be in a running state.
- Only one Transaction Processor task should be running.
- With Siebel applications version 5 and above, there can be more than one Transaction Router task running at the same time.

To verify the status of these tasks, access the Server Tasks view, as follows:

In Siebel applications version 7.7 and higher, navigate to the Administration – Server Management screen and select the **Tasks view** link from the link bar.

The status of these tasks can also be determined using the following server manager commands:

- `srvrmgr>` list tasks for comp `txnproc`
- `srvrmgr>` list tasks for comp `txnroute`

You can find more information on these commands and on using the command-line interface in the Siebel System Administration Guide: *Siebel*.

2. Confirm that the Transaction Processor is processing transactions.

Siebel versions 8.x, 7.x:

Run the following query on the server database, choosing the appropriate syntax for your RDBMS:

```
SELECT ST.TYPE, ST.LAST_FILE_NUM "DX FILE", N.NAME,N.EFF_END_DT,ST.LAST_TXN_NUM "TXN ID",
ST.LAST_UPD, SUBSTR(N.NAME,1,20) "TXNPROC",
SUBSTR(N.APP_SERVER_NAME,1,12) "APPSERVER"
FROM siebel.S_DOCK_STATUS ST, siebel.S_NODE N
WHERE ST.NODE_ID=N.ROW_ID
AND ST.LOCAL_FLG= 'Y'
AND ST.TYPE IN ('ROUTE', 'CLEAN')
AND N.NODE_TYPE_CD= 'TXNPROC'
AND (N.EFF_END_DT IS NULL OR N.EFF_END_DT > sysdate);
MS SQL Server
SELECT ST.TYPE, ST.LAST_FILE_NUM "DX FILE", N.NAME,N.EFF_END_DT,ST.LAST_TXN_NUM "TXN ID",
ST.LAST_UPD, SUBSTRING(N.NAME,1,20) "TXNPROC",
SUBSTRING(N.APP_SERVER_NAME,1,12) "APPSERVER"
FROM S_DOCK_STATUS ST, S_NODE N
WHERE ST.NODE_ID=N.ROW_ID
AND ST.LOCAL_FLG= 'Y'
AND ST.TYPE IN ('ROUTE', 'CLEAN')
AND N.NODE_TYPE_CD= 'TXNPROC'
AND (N.EFF_END_DT IS NULL OR N.EFF_END_DT > getdate());
DB2
SELECT ST.TYPE, ST.LAST_FILE_NUM "DX FILE", N.NAME,N.EFF_END_DT,ST.LAST_TXN_NUM "TXN ID",
ST.LAST_UPD, SUBSTR(N.NAME,1,20) "TXNPROC",
SUBSTR(N.APP_SERVER_NAME,1,12) "APPSERVER"
FROM siebel.S_DOCK_STATUS ST, siebel.S_NODE N
WHERE ST.NODE_ID=N.ROW_ID
AND ST.LOCAL_FLG= 'Y'
AND ST.TYPE IN ('ROUTE', 'CLEAN')
AND N.NODE_TYPE_CD= 'TXNPROC'
```

```
AND (N.EFF_END_DT IS NULL OR N.EFF_END_DT > current timestamp);
```

This query returns two records for each active Transaction Processor, one of type ROUTE and one of type CLEAN. The ROUTE value represents the last .dx file and transaction copied to the SIEBEL_ROOT\txnproc directory. The CLEAN value represents the last .dx file deleted from the SIEBEL_ROOT\txnproc directory.

If Transaction Processor and Transaction Router are processing correctly, the ROUTE values for DX FILE and TXN ID continue to increase over time.

Another way to find information about the last transaction and the last file is to view the Siebel Remote Administration > Processor Status view:

- In Siebel applications version 7.7 and above, navigate to Administration - Siebel Remote > Processor Status.
- In Siebel applications versions 7.0.x and 7.5.x, select View > Site Map > Siebel Remote Administration > Processor Status.

The Processor Status view shows information about the last transaction and the last file created by the Transaction Processor in the \TXNPROC directory on the Siebel server. Normally, if there aren't any problems, the last transaction and last file created keep increasing. If this value keeps increasing, users can see that Transaction Processor is processing transactions.

3. Verify that there are no obsolete Transaction Processors.

   There might be Transaction Processor entries that are no longer in use. This can happen after an upgrade to a new version of Siebel applications, or if a Siebel server previously in use is no longer active. Transaction Processors without end dates that aren't in use prevent the proper and timely clean up of the transactions in the S_DOCK_TXN_LOG and the .dx files in SIEBEL_ROOT\txnproc directory.

   To identify all active Transaction Processor entries, run the following SQL query:

```
select n.NAME,st.TYPE, st.LAST_FILE_NUM "DX FILE", st.LAST_TXN_NUM "TXN ID",
st.LAST_UPD, st.ADDTL_INFO
FROM S_DOCK_STATUS st, S_NODE n
where st.NODE_ID=n.ROW_ID
AND st.LOCAL_FLG='Y'
AND st.TYPE in ('ROUTE', 'CLEAN')
AND n.NODE_TYPE_CD='TXNPROC'
AND n.EFF_END_DT is null;
```

   Each Siebel remote server should only have one Transaction Processor entry. To inactivate a Transaction Processor entry, navigate to Siebel Remote Administration > Processor Status view and specify an end date.

4. Confirm mobile web client folders, responsibilities, and positions.

   Confirm that all valid mobile web clients have their own outbox and inbox folders under the SIEBEL_ROOT \Docking directory, and that all have the appropriate responsibility and position associated.

   The Transaction Router can't route to an active mobile web client if:

   - There's no employee associated.
   - There's no position associated.
   - No docking folder exists for the mobile web client.

5. Check for orphaned transactions.

   With Siebel 99, Siebel Systems introduced the concept of multi-operation transactions. For a multi-operation transaction there's one parent and many children. The child transactions have PAR_TXN_ID set to the parent

transaction. Sometimes, if the parent transaction isn't present, the Transaction Processor can't delete the child transactions. These child transactions are then considered orphaned transactions.

To determine whether there are any orphaned transactions, run the following SQL query:

```
SELECT B.TXN_ID, B.ROW_ID, B.PAR_TXN_ID, B.OPERATION, B.ITEM_NAME
FROM S_DOCK_TXN_LOG A, S_DOCK_TXN_LOG B
WHERE A.ROW_ID(+) = B.PAR_TXN_ID
AND A.ROW_ID IS NULL;
DB2 or MS SQL Server
SELECT B.TXN_ID, B.ROW_ID, B.PAR_TXN_ID, B.OPERATION, B.ITEM_NAME FROM S_DOCK_TXN_LOG A
RIGHT OUTER JOIN S_DOCK_TXN_LOG B ON B.PAR_TXN_ID = A.ROW_ID
WHERE A.ROW_ID IS NULL
```

You can find more information in the Remote and Replication Manager Administration guide: *Using the Endtxnutl Utility to Adopt Orphaned Records*.

6. Verify that all inactive mobile users have an end date set.

   Navigate to the Siebel Remote Administration > Mobile Client view and set the end date for those mobile users who are no longer active.

   You can find inactive users by running the following SQL query against the server database:

```
SELECT NAME NODE, LAST_TXN_NUM, LAST_FILE_NUM,
A.MAX_TXN_ID - LR.LAST_TXN_NUM TXNSTOROUTE, APP_SERVER_NAME,
LR.LAST_UPD
FROM S_NODE N, S_DOCK_STATUS LR,
(SELECT MAX(TXN_ID) MAX_TXN_ID FROM S_DOCK_TXN_LOG) A
WHERE N.EFF_END_DT IS NULL
and N.NODE_TYPE_CD = 'REMOTE'
AND LR.NODE_ID = N.ROW_ID
AND LR.TYPE = 'ROUTE'
AND LR.LOCAL_FLG = 'Y'
AND LR.LAST_TXN_NUM != -1
ORDER BY TXNSTOROUTE desc;
```

   Mobile web clients that haven't synced in a long time should be inactivated or re-extracted and encouraged to sync more often.

7. Check for recent changes to position hierarchy, territory re-alignments, or large EIM loads.

   Changing position hierarchies, realigning territories, or loading a large amount of data through EIM creates a large number of transactions. It can take a substantial amount of time for the Transaction Processor and Transaction Routers to work through the backlog and to route all the changes to the appropriate mobile users.

   To speed up processing, re-extract all mobile web clients, or use multiple Transaction Routers. Please note that the higher in the hierarchy that changes are made or positions are added or deleted, the more transactions are created.

   > **Note:** Siebel applications version 5 and higher use set-based transaction logging to reduce database contention for `S_DOCK_TXN_LOG` by only recording one transaction per EIM set in `S_DOCK_TXN_LOG`. Siebel 7 also introduced a new EIM parameter, `LOG TRANSACTIONS TO FILE`. When this parameter is set to TRUE, which is the default, EIM will log transactions under the `File_System\eim` folder with only one marker logged into the `S_DOCK_TXN_LOG` table. When this parameter is set to FALSE, EIM will use set-based transaction logging.

8. Review Siebel remote administration reports.

   In Siebel applications version 7.5.2 and later, there are several reports available to help you monitor your Siebel remote environment. These reports are detailed in the Siebel Remote and Replication Manager Administration Guide: *Monitoring and Reporting for Siebel Remote*

   The following table lists the reports and the views where you can find them:

Report	View Where Available
Mobile Users Status Report	Client Status and Mobile User Summary views
Transaction Processor Status Report	Processor Status view
Transaction Backlog Status Report	Transaction Log view
Mobile User Synchronization Frequency Report	Synchronization Sessions view
Mobile User Synchronization Session Report	Synchronization Sessions view
Regional Node Status Report	Client Status view
Active Mobile Users Usage Reports (Graph and Table)	Synchronization Sessions view
Transaction Router Backlog Report	Transaction Log view
Outbox Transactions Report	Client Status view

If you need more help, log a service request with Oracle Support.

Using the Txnskip Utility to Examine Skipped Transactions

This topic describes how to identify skipped transactions and how to use the Txnskip utility to identify users who require reextraction. The Txnskip utility creates reports that identify users who are affected by any skipped transactions. An affected user is a user who receives a transaction if that transaction is not skipped. For data integrity, it might be necessary for you to reextract the local database for each affected user. You can run Txnskip without shutting down the server components that Siebel Remote uses.

To use the Txnskip utility to examine skipped transactions

1. Log in to the Siebel Server with administrator privileges.

   For more information, see *Logging in to the Siebel Database as an Administrator*.
2. Navigate to the Administration - Siebel Remote screen, and then the Transaction Skipped view.
3. In the Transaction Processor list, choose a record according to the Transaction Processor Name and the Siebel Server name.

4. Examine the skipped transactions that display in the untitled list that appears.

   If you use Siebel Tools to view the untitled list applet, then this applet is named Skipped Transaction List Applet.
5. Make a note of the ID number of the first transaction and the ID number of the last transaction in a sequence of skipped transactions.

   In Step 7, you use the ID number of the first transaction for the first_transaction parameter. You use the ID number of the last transaction for the last_transaction parameter.
6. Configure parameters for the session.

   For more information, see *Configuring Session Parameters for a Utility*.
7. To run the Txnskip utility, enter the following command in a single line:

```
txnskip /u username /p password /o "output_file" /a Siebel_server_name /b first_transaction /
e last_transaction
```

   Use parameters described in the following table.

Parameter	Description
u username	The login name for the administrator.
p password	The password for the administrator.
o "output_file"	The path and file name for the file that holds the report that the Txnskip utility creates.
a Siebel_server_name	Required. The name of the Siebel Server where the user synchronizes.
c ODBC_data_source	The ODBC Data Source. The default environment variable is SIEBEL_DATA_SOURCE.
d Siebel_table_owner	The Siebel table owner. The default environment variable is SIEBEL_TABLE_OWNER.
b first_transaction	The transaction ID for the first skipped transaction in the sequence.
e last_transaction	The transaction ID for the last skipped transaction in the sequence.

8. Examine the output file.

Using the Txnutl Utility to Examine Corrupt Transactions

The Txnutl utility gathers information about the transactions that DX files contain or that exist in the transaction log table (S_DOCK_TXN_LOG). For example, if the transaction log table contains a corrupt transaction, then you can use

txnutl to identify the corrupt transaction. You can also use Txnutl to open and examine the contents of a DX file to help resolve an error that occurs when Siebel Remote processes the DX file.

The Txnutl utility can provide information in the following ways:

- To receive output on your computer monitor, you can not specify an output file.
- To place output in a legible text file, you can append the output_file_name parameter at the end of the command.
- To place output in compressed files, you can specify parameters for the command that runs the utility.

For more information, see *Modifying the S_DOCK_TXN_LOG Table*.

To use the Txnutl utility to examine corrupt transactions

1. Configure parameters for the session.

   For more information, see *Configuring Session Parameters for a Utility*.
2. Enter the following command in a single line:

   ```
   txnutl /u username /p password /r input_file_name /m y or n /s start_txn_id /v [y/n] /e end_txn_id /
   w output_file_name /x y or n
   ```

   Use parameters described in the following table.

Parameter	Required	Description
u username	Required	The login name for the administrator.
p password	Required	The password for the administrator.
r input_file_name	Required	The path and file name of the DX file or XML file that you must examine. If the file is in XML code, then you must also set the m parameter to y.
m y or n	Optional	Specifies if the input file is in XML code. If you use the Txnutl utility to examine transactions that reside in an XML file, then you set the m parameter to y to indicate that the input file is in XML code. For example, if you set the x parameter to y on a previous run of the Txnutl utility, and if you must use this output as input to a subsequent run of txnutl, then you set the m parameter to y. The default value is N for no, which indicates that the input file is not in XML code.
s start_txn_id	Optional	If you use the Txnutl utility to examine a range of transactions that exist in the S_DOCK_TXN_LOG table, then you use the s parameter to specify

Parameter	Required	Description
		the transaction ID number that immediately precedes the range that you must examine.
e end_txn_id	Optional	If you use the Txnutl utility to examine a range of transactions that exist in the S_DOCK_TXN_LOG table, then you use the e parameter to specify the last transaction ID of the range that you must examine.
w output_file_name	Optional	Specifies an output file name: o If you include the w parameter, then the Txnutl utility does not write to the S_DOCK_TXN_LOG table. o If you do not include the w parameter, then the Txnutl utility writes to the S_DOCK_TXN_LOG table. To prevent the Txnutl utility from creating duplicate records in the S_DOCK_TXN_LOG table, previous versions of Siebel Remote required that you use the w parameter. This parameter is optional.
x y or n	Optional	If you set the x parameter to y, then the Txnutl utility writes the output file in XML code instead of writing in the DX file format. The default value is N.

The following is an example of a typical command that runs the Txnutl utility:

```
txnutl /u sadmin /p sadmin /r my_input.dx /w abc.dx
```

where:

- Txnutl is the name of the utility.
- **sadmin** is the user name.
- sadmin is the password.
- my_input.dx is the name of the input file.
- abc.dx is the name of the DX file.

You can arrange these parameters in any order.

3. Examine the output file.

Using the Txnutlr Utility to Create Statistics

The Txnutlr utility creates some operational statistics that you can use during troubleshooting when you gather information about transactions for multiple users. You can create this report for any of the following items:

- A single user
- A regional node

- A list of users

To use the Txnutlr utility to create statistics

1. Configure parameters for the session.

   For more information, see *Configuring Session Parameters for a Utility*.
2. Enter the following command in a single line:

```
txnutlr /b beginning_transaction_number /e dx_file_end_time /f docking_folder /i siebel_repository
 /l data_lines_per_user /n node_or_file_name /o output_file /r [y/n] /s dx_file_start_time /
t end_transaction_number /w [y/n] /x [y/n]
```

   Use parameters described in the following table.

Parameter	Required	Description
b beginning_transaction_number	Optional	The number of the first transaction file in the report. If you include this parameter, then the Txnutlr utility ignores the following parameters: o dx_file_end_time o dx_file_start_time
e dx_file_end_time	Optional	The date and time of the latest transaction in the report. The format is yyyy-mm-dd hh:mm:ss.
f docking_folder	Required	The path to the docking folder that Siebel Remote uses.
l data_lines_per_user	Optional	The number of lines of data that the report displays for one user. The default value is 20.
n node_or_file_name	Required	The node name of the Siebel Server on the regional node. Instead of this node name, you can also use an at symbol (@) followed by the name of a file that contains the required user names. To separate each user name in this file, you must use one of the following items: o Comma o Space o Semicolon o Carriage return
o output_file	Required	The full path and file name of the output file that contains the report. If you do not include this path, then

Parameter	Required	Description
		the Txnutlr utility writes the file to the following current working folder: `siebsrvr\bin`
s dx_file_start_time	Optional	The date and time of the earliest transaction in the report. The format is yyyy-mm-dd hh:mm:ss.
t end_transaction_number	Optional	The number of the last transaction that the report includes. If you use the t parameter, then the Txnutlr utility ignores the following parameters: o dx_file_end_time o dx_file_start_time
w y or n	Optional	Specifies to include or not include data from all the DX files in the folder. If you set the w parameter to y, then the Txnutlr utility ignores the following parameters: o beginning_transaction_number o dx_file_end_time o dx_file_start_time o end_transaction_number The default value is n for no.
x y or n	Optional	Specifies to display or not display detailed transaction output on your computer monitor.

The following is an example of a typical command that runs the Txnutlr utility:

```
txnutlr /f C:\siebel\ses\siebsrvr\docking /n regional /w y
```

where:

- Txnutlr is the name of the utility.
- C:\siebel\ses\siebsrvr\docking is the docking_folder.
- regional is the node_or_file_name.
- y indicates to include data from all the DX files that reside in the folder.

3. Examine the output file.

   The Txnutlr utility writes the report in the following location, by default:

   - For Windows, in the `SIEBEL_ROOT\docking\reports` folder.
   - For UNIX, in the `SIEBEL_ROOT\reports` folder.

Using the Visutl Utility to Determine Visibility for a User

You can use the Visutl utility to determine if a user is authorized to view a record, and to identify a visibility rule that denies such authorization. If you encounter a situation where a user does not receive some records, then you can determine whether the user is currently authorized to view those records. In a Siebel implementation, *visibility rules* determine whether Siebel Remote includes a Siebel record in the Siebel database extract for the user and if it routes the record to the user during synchronization.

It is not necessary to stop all transaction routers before you start the Visutl utility because it creates a visdatautil.dbf file instead of using the visdata.dbf file that the transaction routers use.

For more information about:

- Dock objects: See *Examining Visibility Rules of the Dock Object*.
- Visutl utility: See *What is visutl and how do I run it?* (KB682728).

To use the Visutl utility to determine visibility for a user

1. In the Siebel application, find the record that you must examine.

   For example, to find an opportunity, navigate to the opportunity screen, and then query the Opportunity Name field for the record.
2. With the record you found in Step 1 still chosen, Click Menu, and then the About Record menu item.
3. Note the value in the Row # field.
4. Configure parameters for the session.

   For more information, see *Configuring Session Parameters for a Utility*.
5. Enter the following command in a single line:

```
visutl /u user_name /p password /a application_server_name /c odbc_data_source /d siebel_table_owner /
n node_name /l log_file_name /v n or l or m or h or r
```

   Use parameters described in the following table.

Parameter	Required	Description
u user_name	Required	The login name for the administrator.
p password	Required	The password for the administrator.

Parameter	Required	Description
a application_server_name	Required	The name of the Siebel Server where the user synchronizes.
n node_name	Required	The remote client where the Visutl utility examines visibility. You must use all upper case characters.
l log_file_name	Optional	The name of the log file where the Visutl utility logs results. The default value is visutl.log in the current folder. To save the log in another location, you can specify a full path and file name.
v n or l or m or h or r	Optional	The level of detail that the Visutl utility displays while it runs and saves to the log: o n is None o l is Low o m is Medium o h is High o r is Recursive In most situations, it's recommended that you use the h level. The recursive level does an exhaustive examination of the visibility rules that apply to a record. This level can degrade performance.

You can include parameters in any order.

The following is an example of a typical command that runs the Visutl utility:

```
visutl /u sadmin /p sadmin /a APPSVR01 /n JSMITH /v H
```

where:

- Visutl is the name of the utility.
- `sadmin` is the user name.
- sadmin is the password.
- APPSVR01 is the name of the Siebel Server.
- JSMITH is the name of the node.

- H specifies the level of detail to display and save.

6. When the Visutl utility prompts you for a table name, you must enter the name of the Siebel database table that contains the record you must examine.
   For example, you enter S_ORG_EXT for an account record, or S_CONTACT for a contact record.
7. When the Visutl utility prompts you for a where clause, you must enter a valid where clause.
   For example, if the row_id you noted in Step 3 is 7-4HWXY, then you enter the following clause:
   ```
   where ROW_ID = '7-4HWXY'
   ```
8. When the Visutl utility prompts you for another where clause, you press the Enter key.
   The Visutl utility displays information about a rule that grants or denies visibility to a user. It displays this information according to the level of detail you specify.

Running the Visutl Utility on a Cluster

To run the Visutl utility on a cluster, you specify the name of the cluster in the _CLUSTER_NETWORK_NAME_ environment variable.

To run the Visutl utility on a cluster

1. Add the following line to the siebenv.bat file:
   ```
   set _CLUSTER_NETWORK_NAME_= cluster_name
   ```
   where:
   - cluster_name is the name of the cluster where the Visutl utility runs.
     Make sure you include an underscore as the first and last character in the command.
2. Run the siebenv.bat file.
3. Run the Visutl utility.

Configuring Session Parameters for a Utility

This topic describes how to configure parameters that a utility requires to run a session.

To configure session parameters for a utility

1. Open a command line on the Siebel Server that uses Siebel Remote.
2. Navigate to the folder that includes the txnutl.exe file:
   - For a Siebel Server uses Windows, open a command window, and then navigate to the `SIEBEL_ROOT\siebsrvr\bin` folder.
   - For a Siebel Server that uses UNIX, navigate to the `SIEBEL_ROOT/bin` folder.
3. Configure parameters for the session:
   - For a Siebel Server that uses Windows, you run siebenv.bat.
   - For a Siebel Server that uses UNIX, you do the following:

- Run siebenv.sh or siebenv.csh, depending on the shell you are using.
- To set the SIEBEL_REPOSITORY environment variable to Siebel Repository, run the setenv command.

14 Predefined Routing Models

Predefined Routing Models

This chapter describes predefined routing models. It includes the following topics:

- *Predefined Routing Models for Siebel Remote*
- *Predefined Routing Models for Siebel Financial Services*

For more information, see *Deploying a Predefined Routing Model*.

Predefined Routing Models for Siebel Remote

The following table describes the routing models that come predefined with Siebel Remote. If your implementation uses a routing model, then Siebel Remote does a database extract and routes subsequent transactions to the user that are relevant to the job role that the name of the routing model describes, such as salesperson. To examine the views that some routing models reference, see *Using Responsibilities to Route Data*.

Routing Model	Description
Analyst	The Analyst routing model routes the following data: • Contacts • Accounts • Assets • Service Requests • Quotes The analyst also receives activities but only those activities that are related to quotes, opportunities, or service requests. Siebel Remote also routes Project Items, such as the following: • Team Workbook • Time and Expense • Time sheets
Consultant	The Consultant routing model allows a limited use license for the professional services functionality. It routes data only for the following items: • Time sheets • Expense reports • Some project information • Calendar • Employee skills

Routing Model	Description
Executive Management	The Executive Management routing model is an extract-only routing model for an executive manager. It allows this manager to use the remote client to do everyday tasks. It excludes all manager rules so that Siebel Remote routes to remote clients only that data that is visible.
Field Engineer	The Field Engineer routing model routes data that the user requires to do and debrief a complex job that requires an acceptable level of historical data regarding customer and asset history. The Field Engineer can use this data to do the following work: • Order parts • Create service invoices • Debrief time and expense on site • Create cycle counts Debriefing is the reporting of material usage, time, and expenses to service managers after the user completes an activity.
Field Sales Manager	The Field Sales Manager routing model routes data that is typical for the Sales Representative Standard, but it also includes team data for accounts, contacts, and opportunities.
Field Sales Representative	The Field Sales Representative routing model routes data that is relevant to a salesperson.
Field Technician	The Field Technician routing model routes data that is relevant to a field technician.
Life Science User	The Life Science User routing model is similar to the Mobile Client - Standard routing model except that it routes more data to remote clients and contains some extra rules that the Siebel Life Sciences applications require. These extra rules are for the following dock objects: • Activity • Assets • Barcode • DocAgreement • Expense • GroupNews • InvoicableCharge • Order • OrgSource • Party • Product • Project • ProjectItem • PrspCon • RepairPart • ServiceRequest • Time Sheet Item

Routing Model	Description
Minimal Data	The Minimal Data routing model routes data only for the following items: • Calendar Items • My Contacts • My Accounts • My Opportunities
Mobile Client - Extract Only	The difference between the Mobile Client - Extract Only routing model and the Mobile Client - Standard routing model is that the Mobile Client - Extract Only routing model does not enable synchronization. A local database that uses the Mobile Client - Extract Only routing model reflects a snapshot of application data with respect to the user.
Mobile Client - Standard	Unlike other routing models, the Mobile Client - Standard routing model routes the full set of data that is related to the user, according to the configuration of the visibility rules in the Siebel runtime repository. There are some exceptions. For more information, see *About the Standard Routing Model*.
Mobile Partner User	The Mobile Partner User routing model routes data that is relevant to the Partner Sales position and the Service Representative position who use a mobile version of the Siebel PRM Partner Portal application. This model includes the following items: • Accounts • Activities • Assets • Contacts • Correspondence • Inventory Locations • Opportunities • Orders • Price Lists • Products • Proposals • Quotes • Revenues • Service Requests • Sources
Selective Retrieval	The Selective Retrieval routing model routes data that allows the user to use individual records that Siebel Remote synchronizes to the remote client. Siebel CRM releases support the selective retrieval functionality for the following objects: • Accounts • Contacts

Routing Model	Description
	• Opportunities • Projects • Service Requests For more information, see *Selective Retrieval Routing Model*.
Senior Field Engineer	The Senior Field Engineer routing model routes data that supports the following: • Interactions with other users and with the service center • Access to product and parts data • Access to solution knowledge bases • Access to customer and asset data • Basic sales functionality

About the Standard Routing Model

A user whom you assign to the Mobile Client - Standard routing model receives the full data set. The following items typically determine the data that this user can view:

- Position
- Ownership
- Organizational structure
- Visibility of items in the following views:
  - My View
  - My Team View

    For example, My Team's Opportunities.

Siebel Remote also routes data that is visible at the enterprise level that typically includes metadata or the setup data that the Siebel application requires. For more information, see *How Positions, Organizations, and Responsibilities Affect Access*.

Dock Objects That the Mobile Client-Standard Routing Model Does Not Include

The following table describes the dock objects that the Mobile Client-Standard routing model does not include.

Dock Object	Description
Activities	This routing model does not route the following activities: • Activities that visible invoiceable charges reference • Activities that are associated with subordinates of the employee • Activities that are assigned to subordinates of the employee
Assets	Assets that visible invoiceable charges reference.

Dock Object	Description
Audit Log	Audit trail data that is associated with all objects.
Barcode	Barcode configuration information.
Call Script Question	Data that is associated with SmartScript functionality.
CHAMP	Data that the CHAMP methodology requires.
Comm (Marketing Campaign)	Data that is associated with Marketing Campaign functionality.
Content Set	Data that is associated with Content Base functionality.
Content Type	Data that is associated with configuration of Content Base functionality.
CTI Cfg	CTI configuration data that CTI functionality requires.
DD Filter	Data that is associated with filters that Marketing Campaign functionality requires.
DD Hierarchical Attribute	Data that is associated with Hierarchy (family function) that Marketing Campaign functionality requires.
DD List Format	Data that is associated with Lists that Marketing Campaign functionality requires.
DD Measure	Data that is associated with Measures that Marketing Campaign functionality requires.
DD Measure-based Attribute	Data that is associated with Measure Based Attributes that Marketing Campaign functionality requires.
DD Sort Family	Data that is associated with Parent for Sort Family that Marketing Campaign functionality requires.
DD Source Code Format	Data that is associated with Source Code Format that Marketing Campaign functionality requires.
DocAgreement	DocAgreement that a visible invoiceable charge references.
Docking Object	Data that is associated with the data definition of the Siebel Remote Docking Object.
DockRoute	Data that is associated with the Siebel Remote Routing Model.
DocQuote	DocQuote that visible Revenue references.
EAI Lookup Map	Data that EAI components use to map external application values to Siebel values and to map Siebel values to external application values.

Dock Object	Description
Employee Skill	Employee skills data.
Expense	Expense reports that a visible invoiceable charge references.
Group News	Data that is associated with Content Path.
Integration Object Map	Data that is associated with EAI Integration Object mapping.
Invoicable Charge	Visible Charges and credits data that can be invoiced to customers or that the employee creates.
List of Value	List of value data that the remote client does not require.
MS Project Integration	Seed data that maps Microsoft Project fields to Siebel Project fields.
Note	A note that is associated with quote, literature, or other objects that do not contain a note table.
Order	Visible order data that can be invoiced to customers.
Org Source	Accounts to be targeted for a promotion.
Outlook Integration	Seed data that Siebel CRM uses to define business components, business objects, views, and applets that display items in Microsoft Outlook.
Party	Party data that a visible invoiceable charge references. Contact records that the CTI configuration teleset references. Party data that a visible quote references. User roles that are associated with the user.
Postal Code	ZIP code data.
Product	Product data that a visible invoiceable charge references.
Project	Project data that a visible invoiceable charge references.
Project Item	Project item data that a visible invoiceable charge references.
PrspCon	Prospect.
Repair Part	Repair part data a visible invoiceable charge references.
Server Domain	Server domain information that a PIM (Siebel Server Sync) synchronization that is server based uses.

Dock Object	Description
Server Domain List of Value	List of values for PIM language independent code that a PIM synchronization that is server based uses.
Server Domain Profile	Server domain configuration that a PIM synchronization that is server based uses.
Server Domain Translation Map	Server domain translation map that a PIM synchronization that is server based uses.
Service Request	Service request that a visible and invoiceable charge references.
SMQ Administration	Message business object information for MQ.
SMQ History	History information for MQ.
Task-Based Process	Task definition data that an administrator indicates through the administrative screens for regional node only.
Terr Accnt (Territory Account)	Territory account data that is the Territory Alignment process uses on the Siebel Server.
Terr Algn (Territory Alignment)	Territory alignment data that the Territory Alignment process uses on the Siebel Server.
Terr Asset (Territory Asset)	Territory asset data that the Territory Alignment process uses on the Siebel Server.
Terr Con (Territory Contact)	Territory contact data that the Territory Alignment process uses on the Siebel Server.
Terr Hier (Territory Hierarchy)	Territory hierarchy data that the Territory Alignment process uses on the Siebel Server.
Terr Region (Territory Region)	Territory region (brick) data that the Territory Alignment process uses on the Siebel Server.
Terr ZIP (Territory ZIP)	Territory ZIP code data that the Territory Alignment process uses on the Siebel Server.
Time Sheet Item	Time sheet item that a visible invoiceable charge references.
Universal Inbox Item	Universal inbox item data that the system administrator does not mark for replicating to the remote client.
Universal Inbox Item Typ	Universal inbox item type data that the system administrator does not mark for replicating to the remote client.
Workflow	Workflow process or step that the system administrator does not mark for replicating to the remote client.
Workflow Definition	Workflow deployment definition that the system administrator does not mark for replicating to the remote client.

Dock Object	Description

Predefined Routing Models for Siebel Financial Services

The following table lists the predefined routing models for Siebel Financial Services that come predefined with Siebel Remote.

Routing Model	Responsibility	Type
Institutional Finance Sales Manager	Institutional Finance Sales Manager	Specialized
Institutional Finance Analyst	Institutional Finance Analyst	Specialized
Credit Originator	Credit Originator	Specialized
Insurance Sales Agent	Insurance Sales Agent	Specialized
Insurance Sales Manager	Insurance Sales Manager	Specialized

To reduce the amount of data that Siebel Remote synchronizes to the user, you can use each of these routing models with the responsibility that the table lists. It is strongly recommended that you get help before you deploy Siebel Remote with any of these specialized routing models. For help with routing models, see *Getting Help from Oracle*.

For more information, see *Controlling the Data That Siebel Remote Routes to Clients*.

Institutional Finance Sales Manager Routing Model

You can configure Siebel Remote to use the Institutional Finance Sales Manager routing model to send database extracts and transactions that include information that is relevant to a user who manages institutional finance sales. This user can view all records for the manager and all the records for users who report directly to this manager. A manager with no direct reports does not receive team data.

Siebel Remote handles literature routing. It synchronizes links to the literature with the remote client but it synchronizes the literature attachments only on request.

Institutional Finance Analyst Routing Model

To send database extracts and transactions that include information that is relevant to an institutional finance analyst, you can use the Institutional Finance Analyst routing model.

Credit Originator Routing Model

You can use the Credit Originator routing model for individuals in your organization who are responsible for originating mortgages or other consumer loans and for managers of these individuals. If you assign this routing model to a user, then Siebel Remote sends to this user the database extracts and transactions that include information that is relevant to loan origination. A manager can view all records for the manager and for the people who report to this manager. A manager with no direct reports does not receive team data.

Insurance Sales Manager Routing Model

You can use the Insurance Sales Manager routing model for insurance sales managers in your organization. If you assign this routing model to a user, then Siebel Remote sends to this user the database extracts and transactions that include information that is relevant to a person who manages insurance sales agents. Siebel Remote routes to the insurance sales manager the same records that it routes to the people who report to this manager. This routing model includes the business components that a Siebel application uses for the Insurance Sales Agent position in addition to the team data for the manager.

Insurance Sales Agent Routing Model

You can use the Insurance Sales Agent routing model for insurance field sales agents in your organization. You can also use this routing model can for other users, such as health insurance sales agents and site coordinators. If you assign this routing model to a user, then Siebel Remote sends to this user a database extract and transactions that include information that is relevant to the user position.

Claims Manager Routing Model

You can use the Claims Manager routing model for insurance claims managers in your organization. If you assign this routing model to a user, then Siebel Remote sends to this user the database extracts and transactions that include information that is relevant to a person who manages claims adjusters. Siebel Remote routes to the claims manager the same records that it routes to the people who report to this manager. This routing model includes the business components that a Siebel application uses for the Claims Adjuster position in addition to the team data for the manager.

Claims Adjuster Routing Model

You can use the Claims Adjuster routing model for insurance field claims adjusters in your organization. The following business components are associated with this routing model:

- Households
- Contacts
- Policies

- Service Providers
- Claims
- Claim Elements
- Service Requests
- Activities
- Calendar Access

Business Components That Are Associated with Predefined Routing Models for Financial Services

The following table lists the business components that are associated with each of the predefined routing models. The letter Y indicates that the business component is associated with the routing model.

Business Components That Are Associated with Predefined Routing Models for Financial Services

Business Component	Finance Manager	Finance Analyst	Credit Originator	Insurance Manager or Agent
Activities	Yes	Yes	Yes	Yes
Applications	Yes	No	Yes	Yes
Calendar Access	Yes	Yes	No	Yes
Call Reports	Yes	Yes	No	No
Claims	No	No	No	Yes
Companies	Yes	Yes	No	Yes
Contacts	Yes	Yes	Yes	Yes
Employees	Yes	Yes	No	No
Events	Yes	Yes	Yes	Yes
Expense Reports	Yes	Yes	No	No
Facilities	No	No	No	Yes
Financial Accounts	Yes	No	No	No

Business Component	Finance Manager	Finance Analyst	Credit Originator	Insurance Manager or Agent
Holdings and Interests	Yes	Yes	No	No
Households	Yes	No	No	Yes
Literature	Yes	Yes	No	No
Opportunities	Yes	No	Yes	Yes
Policies	No	No	No	Yes
Products	Yes	Yes	Yes	No
Providers	No	No	No	Yes
Securities	Yes	Yes	No	No
Service Requests	Yes	Yes	No	Yes

Differences in the Literature List When Connected to the Local Database

The following fields display in the Literature list of the remote client when this client is connected to a local database. They do not display when connected to the Siebel Server:

- **Local.** Specifies to make the document available on the local file system. If a document is not available locally, then the user can request it by placing a check mark in the Request File check box.
- **Request File.** If this check box contains a check mark, then Siebel Remote downloads the literature during each synchronization.

15 Reference Materials for Siebel Remote

Reference Materials for Siebel Remote

This chapter describes reference information for Siebel Remote. It includes the following topics:

- *Values for System Preferences*
- *Server Component Parameters*
- *Field Descriptions for Administration Screens*
- *Predefined Administrative Reports*
- *Siebel Server Features on a Regional Node*
- *Parameters of the Regional Database Initialization Program*

Values for System Preferences

The following table lists values for system preferences for Siebel Remote. You specify these values in the Remote System Preferences view of the Administration - Siebel Remote screen.

System Preference	Default Value	Other Values
Docking Timestamp Source	Client Transaction Time	Server Database Merge Time
Enable Mobile Password Expiration	Check box contains a check mark, by default.	No check mark
Enable Mobile Password Syntax Check	Check box contains a check mark, by default.	No check mark
Enable Mobile Web Client Lockout	Check box contains a check mark, by default.	No check mark
Enable Transaction Logging	Check box contains a check mark, by default.	No check mark
Expiration Period	5	Positive integer greater than zero is a valid value.
Failed Login Attempts	2	Positive integer is a valid value.
Intersection Table Conflict Resolution	Merge	You can use the following values:

System Preference	Default Value	Other Values
		• First In • Last In
Intersection Table Merge Rule	First In	Last In
Lockout Period	1	Positive integer is a valid value.
Merger Friendly Notification	Conflicts	You can use the following values: • True • False
Merger Transactions Commit	50	You can use the following values: • 10 for DB2 • 10 for Oracle • 1 for Microsoft SQL Server
Minimum Number of Characters	5	Integers from 1 through 15 are valid.
Optimized Visibility Check	Check box contains a check mark, by default.	No check mark
Password Content	Alphanumeric Special Character	You can use the following values: • Alphanumeric • None • Special Character
SFM: Maximum File Attachment (KB)	100	Positive integer is a valid value.
System Conflict Resolution	Server Wins	Client Wins
Visibility Rules Per Statement	50	Not applicable.
Visibility Rules Per Statement 1	20	Not applicable.
Visibility Rules Per Statement N	1	Not applicable.
Warning Period	2	Positive integer is a valid value.

Server Component Parameters

This topic describes parameters for server components that Siebel Remote uses. It includes the following information:

- *Parameters of the Synchronization Manager Server Component*
- *Parameters of the Transaction Processor Server Component*
- *Parameters of the Transaction Router Server Component*
- *Parameters of the Transaction Merger Server Component*
- *Parameters of the Generate New Database Server Component*
- *Parameters of the Database Extract Server Component*
- *Parameters of the Replication Agent Server Component*

For information about how to use generic parameters with these server components and how to use the Server Manager utility to manage server components, see *Siebel System Administration Guide* .

Parameters of the Synchronization Manager Server Component

The following table describes some of the parameters you can use with the Synchronization Manager server component (alias SynchMgr).

Name	Alias	Required	Description
Authentication Method	Authentication	Optional	Method that Siebel Remote uses to authenticate remote clients. You can use one of the following values: • **None.** Does not validate the authentication credentials for synchronization. The default value is None. • **Database.** Validates the authentication credentials for synchronization with the user ID and password on the Siebel database. • **SecurityAdapter.** Validates the authentication credentials for synchronization with an authentication system that third-party provides.
Database Connection Timeout	DBConnectionTimeo	Optional	Determines if the Siebel Server attempts to prevent automatic closure of an idle database connection. In some situations, your database software might automatically close the connection if it is idle longer than an amount of time. This might occur when Siebel Remote initializes a local database when there is a slow communications link to the Siebel database (server database), such as might be the case with some connections to IBM DB2 on z/OS. If the Database Connection Timeout for parameter is 0, then the Siebel Server does not attempt to prevent database connection timeouts. If the Synchronization Manager server component reaches the timeout, then it exits with an error message. To configure the Siebel Server to prevent a database connection timeout, you can set the value of the Database Connection Timeout parameter to a value that is smaller than the timeout

Name	Alias	Required	Description
			period for your database software. If the idle time reaches the value that you assign to this parameter, then the Siebel Server creates activity on the Siebel database connection to prevent a timeout. To set this parameter, you can use the Server Manager command line or the administrative screens. If you use the administration screens, then you must click the Advanced button in the header of the Component Parameters list. For more information, see *Making Advanced Server Parameters Visible*.
Domain Name	NTDomain	Optional	If your implementation uses AppServer authentication, then the Domain Name parameter specifies the Windows domain name for the user name and password. To use password authentication with Windows, you must provide the Windows user with rights to the Siebel Server.
Communication Type	CommType	Optional	Specifies whether you are encrypting synchronization with remote clients using TLS. You can use one of the following values: • TLS • NONE For more information, see *Configuring TLS Encryption for Siebel Remote*.
Encryption Type	Crypt	Optional	Specifies whether you are encrypting synchronization using RSA. You can use one of the following values: • RSA • NONE **Note:** Encryption Type (Crypt) no longer applies to Siebel Remote synchronization with remote clients.
Maximum Number of Cached Thread Contexts	MaxCtxCache	Optional	Maximum number of cached thread contexts that a multithreaded server maintains. The default value is 10 cached contexts.
Maximum Task Number	MaxTasks	Optional	Maximum number of synchronizations that the Synchronization Manager server component can service simultaneously. The default value is 100.
Minimum Number of Cached Thread Contexts	MinCtxCache	Optional	Minimum number of cached thread contexts that a multithreaded server maintains. The default value is 2 cached contexts.
Siebel File System	FileSystem	Optional	Siebel File System location for the Siebel Enterprise. For more information, see *About the Siebel Enterprise and the Siebel Enterprise Server*.

Name	Alias	Required	Description
Static Port Number	PortNumber	Optional	The TCP/IP port number that is dedicated to the Synchronization Manager server component. The default value is 40400. For more information, see *Formatting the DockConnString Parameter*.

Parameters of the Transaction Processor Server Component

The following table describes the parameters of the Transaction Processor server component (alias TxnProc).

Name	Alias	Required	Description
Clean DX Files Iterations	CleanFilesIter	Optional	Specifies how frequently the Transaction Processor server component deletes DX files from the **`docking\txnproc`** folder on the Siebel Server. The default value is 1 iteration, with a default of 60 seconds for each iteration, as set in the SleepTime parameter.
Clean Transaction Iterations	CleanTxnsIter	Optional	Specifies how frequently the Transaction Processor server component deletes transactions from the master transaction log table of the Siebel database. You specify this parameter as the number of iterations. The default value is 10.
Maximum Reads per Iteration	MaxRead	Optional	Specifies the maximum number of operations to read for each iteration. The default value is 0, which configures the Transaction Processor server component to read outstanding operations in the Master Transaction Log.
Sleep Time	SleepTime	Optional	Specifies the time, in seconds, to sleep between iterations. When the Transaction Processor server component wakes up, it processes transactions. The default value is 60.
TS Block Size	TSBlockSize	Optional	Specifies the block size for the dobjinst.dbf visibility database, in bytes. The Transaction Processor server component stores data in blocks. This block size is different from the block size that the operating system uses. The default value is 4096 bytes. For help with modifying this parameter, see *Getting Help from Oracle*.
TS Cache Size	TSCacheSize	Optional	Specifies the cache size for the dobjinst.dbf visibility database, in kilobytes. The default value is 4096 kilobytes. For help with modifying this parameter, see *Getting Help from Oracle*.
Write Compressed DX Files	WriteCompressed	Optional	Specifies to write DX files in compressed format. The default value is FALSE. Leave this parameter at the default value. For help with modifying this parameter, see *Getting Help from Oracle*.

Parameters of the Transaction Router Server Component

The following table describes some of the parameters of the Transaction Router server component (alias TxnRoute).

Name	Alias	Required	Description
Id Db Recreate	IdDbRecreate	Optional	A cache that stores the data that Siebel Remote requires to examine visibility. It recreates visdata.dbf, which is the visibility ID database. The default value is FALSE, which configures Siebel Remote to not recreate the Siebel database every time the Transaction Router starts. For more information, see *Making Advanced Server Parameters Visible*.
Id Db Size	IdDbSize	Optional	The size of the visdata.dbf file, which is the visibility ID database, and the amount of memory that Siebel Remote allocates on the Siebel Server for all instances of the Transaction Router. You use this parameter only if the visdata.dbf file is present, or if the Id Db Recreate parameter is set to True. The default value is 50MB, which is optimal in most situations. To improve Transaction Router performance in a large deployment, you can increase this value. The recommended maximum value is 200 MB.
Maximum reads per iteration	MaxRead	Optional	The maximum number of operations that the Transaction Router processes for a user during each run. The default value is 10000.
Maximum seconds per iteration	MaxSecs	Optional	The longest duration that a Transaction Router instance works for one user during each run. The default value is 300 seconds.
Maximum writes per file	MaxWrite	Optional	The maximum number of operations the Transaction Router server component writes for each DX file. The default value is 5000.
Node Division Factor	NodeDivFactor	Optional	The maximum number of users a Transaction Router instance processes during each run. The Transaction Router processes the fractional number of users that Siebel Remote computes using this parameter as a factor. For example, if the value of this parameter is 5, and if there are 100 users on the Siebel Server, then the Transaction Router processes 100 divided by 5, or 20 users. The default value is 5.
Operation Routing Rate Threshold	RouteRateThreshold	Optional	The minimum rate of database transactions that the Transaction Router routes for each second. If the Transaction Router server component performs below this minimum, then Siebel Remote creates an alert.
Read client list iterations	ReadClientsIter	Optional	The number of iterations that occur before the Transaction Router refreshes the list of users to process from the Siebel database. The default value is 10 iterations.

Name	Alias	Required	Description
Set Application Server Name	SetAppName	Optional	Upgrades remote clients from previous versions of Siebel CRM to version 4.0 and later. The default value is TRUE. At start-up, the Transaction Router server component searches the Siebel database for remote clients whose Siebel Server value is not set, and that have a docking folder on the local server. This parameter sets the Siebel Server name in the Siebel database for each of these clients.
Sleep Time	SleepTime	Optional	Time to sleep, in seconds, between iterations. The default value is 60.
TS Cache Size	TSCacheSize	Optional	Cache size for the dobjinst.dbf file in kilobytes. The default value is 2048 kilobytes. It is recommended that the maximum value not exceed the number of users on the Siebel Server multiplied by the size of the largest dobjinst.dbf file.
Write compressed dx files	WriteCompressed	Optional	Write DX files in compressed format. The default value is TRUE.

Parameters of the Transaction Merger Server Component

The following table describes some of the parameters of the Transaction Merger server component (alias TxnMerge).

Name	Alias	Required	Description
Error Mode	ErrorMode	Optional	Determines how Siebel Remote handles a database error that occurs during a Transaction Merger process. The default value is STOP. You can use one of the following values: • **STOP.** Stops the Transaction Merger server component. • **IGNORE.** If all nodes are ignored in an iteration, then the Transaction Merger sleeps. • **DISABLE_NODE.** If an error recurs in the same row, then disables all nodes and stops Transaction Merger. If the mode is set to DISABLE_NODE, then the Transaction Merger sets the effective end date to the current time for the remote client that contains the error. You must reextract the remote client to reactivate it.
Sleep Time	SleepTime	Optional	Time to sleep, in seconds, between iterations. The default value is 60.

Parameters of the Generate New Database Server Component

The following table describes some of the parameters of the Generate New Database server component (alias GenNewDb).

Name	Alias	Required	Description
Interface Tables	IFaceTbls	Optional	Create interface tables and indexes. The default value is FALSE.
Use DDL File	UseDdlFile	Optional	Use when you create a new template file. The default value is FALSE, which configures Siebel Remote to read the schema directly from the Siebel database. Set Use DDL File to FALSE only if you run the Generate New Database component after you modify the schema. Generate New Database then reads the latest schema from the Siebel database instead of from the DDL file.
Warehouse Tables	WarehouseTbls	Optional	Use to create Warehouse tables and indexes. The default value is FALSE.

Parameters of the Database Extract Server Component

The following table describes some of the parameters of the Database Extract server component (alias DbXtract).

Parameter Name	Alias	Required	Description
CD directory	CDDir	Optional	Name of a folder where Siebel Remote copies the snapshot files that the initialization uses.
Client Name	Client	Required	Name of the remote client for which Siebel Remote is extracting a database. This value corresponds to the Mobile Client Name field in the Mobile Clients view. For more information, see *Specifying Client Names*.
Database Init Method	InitMethod	Optional	Method for creating the Siebel Remote database. The default value is *Oracle SE* (for Oracle Database SE2).

Parameter Name	Alias	Required	Description
			Note: Prior to Siebel CRM 20.9 update, the default value was Oracle XE. (Both new and old values have the same effect in Siebel CRM 20.8 Update and later.) If the parameter still has the old value (Oracle XE), then you must synchronize the DbXtract server component in order for the correct value to be displayed (Oracle SE). For more information, see the information about synchronizing components, in *Siebel System Administration Guide* .
Number of Data Import Threads	DatImpThrdNum	Optional	Set this parameter to run DbXtract as a multithreaded component with the specified number of threads. The default value is 3.
Extract all Repository Tables	ExtractRepos	Optional	Configures Siebel Remote to include repository tables in a database extract. Values are TRUE and FALSE. If the Extract all Repository Tables parameter is set to TRUE, then the Get is not necessary. Not using the Get can reduce the amount of time that you require to configure an environment for a developer.
Last Extract Date	ExtractSince	Optional	Specifies a date-time value for extraction. You must use the following format: YYYY-MM-DD HH:MM:SS If specified, then the Database Extract server component extracts a remote client only if Siebel Remote has not extracted this client since the date-time value that you specify in the Last Extract Date parameter.
Last Sync Date	SyncSince	Optional	Specifies a date-time value for synchronization. You must use the following format: YYYY-MM-DD HH:MM:SS If specified, then the Database Extract server component synchronizes a remote client only if Siebel Remote has not extracted this client since the date-time value that you specify in the Last Extract Date parameter.
Maximum data file size	DatFileSize	Optional	Sets the maximum size of a data file in megabytes: • The minimum size is 1. • The maximum size is 1000. • The default value is 500.
Message Language Code	Language	Optional	Extract messages for this language. The default value is ENU.
Mobile Client Version	ClientVersion	Optional	Specifies the remote client software version, which determines whether parallel extraction is supported. This parameter is important during an upgrade. The default value is 2000.

Parameter Name	Alias	Required	Description
Move Siebel Remote Client	Move	Optional	For more information, see *Using the Move Siebel Remote Client Parameter*.
Nodes Per Group	NodesPerGroup	Optional	if the Optimal Mode parameter is TRUE, then the Nodes Per Group parameter specifies the number of users who Siebel Remote extracts together as a group. The default value is 35.
Optimal Mode	OptMode	Optional	Specifies to use the optimal mode to extract a group of users. The default value is FALSE.
Save Client Transactions	SaveTxns	Optional	Save pending client transactions during database initialization. The default value is TRUE. This feature does not work during an upgrade. The Save Client Transactions parameter is valid only for the remote client.
Truncate TS Table	TruncateTSTable		Specifies to truncate the S_DOCK_INITM_n table instead of deleting it after the Siebel database extract task completes. Used in the cleanup phase. The default value is FALSE. If you run the Database Extract server component with the Truncate TS Table parameter set to TRUE, then the user ID that you use to run the server component must possess administrator privileges on the Siebel Server.
TS Block Size	TSBlockSize	Optional	Block size for the dobjinst.dbf file in bytes. The default value is 0. Siebel Remote automatically calculates the block size depending on the total number of rows that are visible in the remote client.
TS Cache Size	TSCacheSize	Optional	Cache size for the dobjinst.dbf file in kilobytes. The default value is 2048 kilobytes.
TS Table Number	TSTableNum		Number of database tables in the dobjinst.dbf file that are available for Database Extract. The range is 1 through 48. The default value is 1. This parameter is the end number of the S_DOCK_INITIM_n table, where n is the TS Table Number.

Specifying Client Names

To specify a list of client names, you add a list of these names to the Client Name parameter and use a comma to separate each name. To specify the name of a file that contains a list of client names, you can use the at sign (@) as the first character in the value that you specify for the Client Name parameter followed by the file name. To separate each client name in this file, you must use one of the following delimiters:

- New line

- Comma
- Space
- Tab
- Period
- Semicolon

To specify a wildcard, you can use one of the following formats:

- To match a single character, use a question mark (?).
- To match zero or more characters, use an asterisk (*).

Using the Move Siebel Remote Client Parameter

If the remote client is currently registered on a Siebel Server that is not the current server, and if you set the Move Siebel Remote Client parameter to TRUE, then the following occurs:

- The Database Extract server component sets the Siebel Server name of the remote client to the local Siebel Server.
- The following server components on the old server stop servicing this remote client in the next iteration:
  - Transaction Router
  - Transaction Merger
  - Database Extract

You can also use the Move Siebel Remote Client parameter to move a regional node in the same way you that you use this parameter to move a remote client.

The default value is FALSE.

If you attempt to extract a remote client that Siebel Remote already extracted for a different server, then the Database Extract server component returns an error.

Parameters of the Replication Agent Server Component

The following table describes the parameters of the Replication Agent server component (alias RepAgent).

Parameter	Alias	Required	Description
HQ Application Server Comm param	CommParam	Optional	The colon-separated list of communications parameters that the regional server uses to connect to the parent Siebel Server.
HQ Application Server Name	HQ	Required	The Dock Connect String of the parent Siebel Server. For more information, see *Setting the HQ Application Server Name Parameter*.
Iterations	Iterations	Optional	Specifies the number of times that the Replication Agent server component connects to the parent node.

Parameter	Alias	Required	Description
			You typically set this parameter to zero (0) to configure the Replication Agent to loop forever or until the server administrator stops it. If you set the Iterations parameter to 1 and then start Replication Agent, then a single synchronization occurs. The default value is 0.
Maximum txns per commit	MaxCommitTxns	Optional	Specifies the number of transactions that Siebel Remote applies before it commits these transactions to the Siebel database. The default value is 100.
Maximum writes per file	MaxWrite	Optional	Limits the size of a DX file. Breaks the DX files that Siebel Remote sends to the parent Siebel Server into smaller, more manageable files. Replication Manager closes the existing DX file and then starts writing to a new DX file when the current DX file reaches the maximum number of operations that you specify in the Maximum writes per file parameter. The default value is 10000.
Receive files	RecvFiles	Optional	You can use one of the following values: • **TRUE.** Replication Manager receives the file attachments that the parent Siebel Server sends to the Siebel Server of the regional node. • **FALSE.** Replication Manager does not receive the file attachments that the parent Siebel Server sends to the Siebel Server of the regional node. The default value is TRUE.
Receive txns	RecvTxns	Optional	You can use one of the following values: • **TRUE.** Replication Manager receives the DX files that the parent Siebel Server sends to the Siebel Server of the regional node. • **FALSE.** Replication Manager does not receive the DX files that the parent Siebel Server sends to the Siebel Server of the regional node. The default value is TRUE.
Send txns	SendTxns	Optional	You can use one of the following values: • **TRUE.** Replication Manager sends DX files from the Siebel Server on the regional node to the parent Siebel Server. • **FALSE.** Replication Manager does not send DX files from the Siebel Server on the regional node to the parent Siebel Server.

Parameter	Alias	Required	Description
			The default value is TRUE.
Sleep time	SleepTime	Optional	The time period, in seconds, that configures Replication Agent to sleep between synchronizations. The default value is 60.

Field Descriptions for Administration Screens

This topic describes fields that you can use in the administration screens that you use with Siebel Remote. It includes the following information:

- *Fields in the Siebel Remote Client Status Form*
- *Fields in the Siebel Remote Client Diagnostics Form*
- *Fields in the Synchronization Sessions List*
- *Fields in the Siebel Remote Upload Statistics Form*
- *Fields in the Siebel Remote Download Statistics Form*
- *Operation Types for the Operation Field of the Transaction Log List*

Fields in the Siebel Remote Client Status Form

The following table describes fields of the Siebel Remote Client Status form.

Column	Field	Description
Extracted on Server	Last Sessions	Time when Siebel Remote extracted this client.
	Seconds	Amount of time required to extract the remote client.
	File name	First file name for the extracted records.
	Rows extracted	Row count of extracted records.
	Snapshot (Kbytes)	Total size in kilobytes for extracted records.
	# of Files in File System	Number of files in file system for this client.
	File System (Kbytes)	Size of files in file system, in kilobytes.
	Max Transaction	Maximum transaction ID when Siebel Remote extracted this client.

Column	Field	Description
Initialized on Client	Last Session	Time when Siebel Remote initialized the local database.
	Seconds	Amount of time required to initialize the local database.
	Free Disk (Kbytes)	Free disk space available on the local computer where you installed the remote client.
	Database (Kbytes)	The size in kilobytes of the local database.
	# of Files in File System	Number of files in the local file system.
	File System (Kbytes)	Total size in kilobytes of files in the local file system.
	Product Version	System information for the computer where the local database resides.
Current status	Last Session	Time when Siebel Remote performed the last synchronization.
	Seconds	Duration of the last synchronization.
	Free Disk (Kbytes)	Free disk space available of the local computer where you installed the remote client.
	Database (Kbytes)	Current size of the local database.
	# of Files in File System	Number of files in the local file system.
	File System (Kbytes)	Current size in kilobytes of files in the local file system.
	Total Sessions	Total number of times this client has synchronized so far.
	Product Version	Current system information for the remote client.

Fields in the Siebel Remote Client Diagnostics Form

The following table describes fields of the Siebel Remote Client Diagnostics form.

Field	Description
Name	Node name.

Field	Description
Type	INIT, ROUTE, RECEIVE, MERGE, CLEAN, SESSION.
Local	Flag to indicate it is for current or local databases.
Created	The time that Siebel Remote created the record.
Last updated	The time that Siebel Remote last updated the record.
Last file	The last file number that Siebel Remote processed for the node.
Last transaction id	The last transaction number that Siebel Remote processed for the node.
Last trxn duration (sec)	The time required to process transaction in the latest session.
Total duration (sec)	Total time required to process transaction for the node.
Last trxn size (bytes)	Size of transactions processed for the node during last session.
Total (bytes)	Total size of transactions processed for the node.
Last trxn operations	Number of operations processed for the node during last session.
Total operations	Total number of operations processed for the node.
Last transactions	Number of transactions processed for the node during last session.
Total transactions	Total number of transactions processed for the node.
Total attachment (bytes)	Total size of file attachments processed for the node.
Total attachments	Total number of file attachments.
Last attachment (bytes)	Size of file attachments for the node during the last session.
Last attachments	Number of file attachments for the node during the last session.
Additional information	More detailed information about the node.

Fields in the Synchronization Sessions List

The following table describes fields in the Synchronization Sessions list.

Field	Description
Synchronization Starts	Date and time when Siebel Remote started the synchronization.
Synchronization Ends	Date and time when the synchronization ended. If the synchronization did not complete successfully, then this field is empty.
Transactions	The number of transactions that Siebel Remote synchronized to the user during the session.
Transaction Size (MB)	The total size in MB of the transactions that Siebel Remote synchronized to the user during the session.
Client Merge Duration (Min)	The amount of time in minutes required to merge transactions on client.

Fields in the Siebel Remote Upload Statistics Form

The following table describes fields in the Siebel Remote Upload Statistics form.

Field	Description
Last Session	Duration of the last synchronization.
Last File	Last transaction file that Siebel Remote created on the remote client, received on the Siebel Server, or applied on the Siebel Server.
Last Transaction	Last transaction that Siebel Remote created on the remote client, received on the Siebel Server, or applied on the Siebel Server.
Transaction Count - Last	Number of transactions that Siebel Remote created on the remote client, received on the Siebel Server, or applied on the Siebel Server during the last synchronization.
Transaction Count - Total	Total transactions that Siebel Remote created on the remote client, received on the Siebel Server, or applied on the Siebel Server since the last database extract.
Operation Count - Last	Number of operations that Siebel Remote created on the remote client, received on the Siebel Server, or applied on the Siebel Server during the last synchronization.

Field	Description
Operation Count - Total	Total number of operations that Siebel Remote created on the remote client, received on the Siebel Server, or applied on the Siebel Server since the last database extract.
KBytes - Last	Size of transactions that Siebel Remote created on the remote client, received on the Siebel Server, or applied on the Siebel Server during the last synchronization, in kilobytes.
KBytes - Total	Size of transactions that Siebel Remote created on the remote client, received on the Siebel Server, or applied on the Siebel Server since the last database extract, in kilobytes.
Duration (Seconds) - Last	Duration of last synchronization that Siebel Remote created on the remote client, received on the Siebel Server, or applied on the Siebel Server, in seconds.
Duration (Seconds) - Total	Total duration of all synchronizations since the last database extract, in seconds.
Attachment Files - Last	Number of file attachments that Siebel Remote created on the remote client, received on the Siebel Server, or applied on the Siebel Server during the last synchronization.
Attachment Files - Total	Number of file attachments that Siebel Remote created on the remote client, received on the Siebel Server, or applied on the Siebel Server since the last database extract.
Attachment Size (KBytes) - Last	Size of file attachments that Siebel Remote created on the remote client, received on the Siebel Server, or applied on the Siebel Server during the last synchronization, in kilobytes.
Attachment Size (KBytes) - Total	Size of files that Siebel Remote created on the remote client, received on the Siebel Server, or applied on the Siebel Server since the last database extract, in kilobytes.

Fields in the Siebel Remote Download Statistics Form

The following table describes fields in the Siebel Remote Download Statistics form.

Field	Description
Last Session	Date and time of last session that Siebel Remote created on the Siebel Server, received on the remote client, or applied on the remote client.
Last File	Last transaction file that Siebel Remote created on the Siebel Server, received on the remote client, or applied on the remote client.
Last Transaction	Last transaction that Siebel Remote created on the Siebel Server, received on the remote client, or applied on the remote client.
Transaction Count - Last	Number of transactions that Siebel Remote created on the Siebel Server, received on the remote client, or applied on the remote client during the last synchronization.

Field	Description
Transaction Count - Total	Total transactions that Siebel Remote created on the Siebel Server, received on the remote client, or applied on the remote client since the last database extract.
Operation Count - Last	Number of operations that Siebel Remote created on the Siebel Server, received on the remote client, or applied on the remote client during the last synchronization.
Operation Count - Total	Total number of operations that Siebel Remote created on the Siebel Server, received on the remote client, or applied on the remote client since the last database extract.
KBytes - Last	Size of transactions that Siebel Remote created on the Siebel Server, received on the remote client, or applied on the remote client during the last synchronization, in kilobytes.
KBytes - Total	Size of transactions that Siebel Remote created on the Siebel Server, received on the remote client, or applied on the remote client since the last database extract, in kilobytes.
Duration (Seconds) - Last	Duration of the last synchronization, in seconds.
Duration (Seconds) - Total	Total duration of all synchronizations since the last database extract of the node, in seconds.
Attachment File Count - Last	Number of file attachments that Siebel Remote created on the Siebel Server, received on the remote client, or applied on the remote client during the last synchronization.
Attachment File Count - Total	Number of file attachments that Siebel Remote created on the Siebel Server, received on the remote client, or applied on the remote client since the last database extract of this node.
Attachment Size (KBytes) - Last	Size of the file attachments that Siebel Remote created on the Siebel Server, received on the remote client, or applied on the remote client during the last synchronization.
Attachment Size (KBytes) - Total	Size of all file attachments that Siebel Remote created on the Siebel Server, received on the remote client, or applied on the remote client since the last database extract of this node.

Operation Types for the Operation Field of the Transaction Log List

The following table describes operation types for the Operation Field of the Transaction Log list.

Operation Type	Description
A	Execute a Data Definition Language (DDL) statement for a database schema update.
B	Delete a dock object instance. A data merge deletes all member table rows only for a server to client operation.

Operation Type	Description
C	Delete a record as a result of deleting a dock object instance for a server to client operation only.
D	Delete a single row.
E	Delete multiple rows.
F	Delete cascading rows.
G	Merge multiple rows.
H	Insert a record as a result of downloading a dock object instance only for a server to client operation.
I	Insert a single row.
J	Contain transactions in an external file.
K	Execute a marker transaction to indicate the start of a client-side transaction.
L	Update the record of a child table that might cause conflict.
M	Execute a marker transaction to stop processing a user, and then continue.
N	Remove any orphan child records that exist in the Siebel database that resulted from a remote client-side merge or cascade delete transaction that was performed on the client database using the W operation.
O	Update conflict ID.
P	Execute a simple Data Manipulation Language (DML) statement that uses pass through.
Q	Delete records of a child table that match the foreign key value. This operation is a compensation operation that Siebel Remote performs as the result of a client-side merge or cascade delete transaction that the W operation performed on the client database. This compensation operation cleans up any orphan child records that exist in the Siebel Server as a result of such a transaction in the remote client.
R	Update the foreign key column of child table records.
S	Shadow operation.
T	Delete records of a child table that might cause conflict.
U	Update a single row.

Operation Type	Description
V	Update multiple rows.
W	Compacted operation of a cascade or client-side merge transaction.
X	Insert set-based rows.
Y	Update set-based rows.
Z	Delete set-based rows.

Predefined Administrative Reports

The following table describes the predefined administrative status reports. The View column describes the view you can use to start the report. For more information, see *About Siebel Replication Manager*.

Name of Report	View	Description
Active Mobile Users Usage Graph	Synchronization Sessions	Displays information for server nodes that contain users. This report takes the start date as a parameter from the user and then creates the following details for each day that occurs between the start date and the current date, in the form of a graph: • The x-axis includes the days in the specified range of dates. • The bar graph displays the number of cumulative units for the day. • The line graph displays the number of unique synchronizations for each day. The number of unique synchronizations indicates the number of users that synchronized for each day.
Active Mobile Users Usage Table	Synchronization Sessions	Displays information for server nodes that contain users. This report takes the start date as a parameter from the user and then creates the following details for each day that occurs between the start date and the current date in the form of a table: • The date column displays the days in the specified range of dates. • The daily initialization column displays the number of initializations for each day. • The cumulative initializations column displays the number of cumulative initializations for each day. • The daily unique synchronizations column displays the number of users that synchronized for each day.
Mobile User Summary Report	Client Status	This report displays the following information for server nodes that contain users:

Name of Report	View	Description
		• Date and time of last extraction • DB Extract Size (MB) • DB Extract Rows • Local DB Size (MB) • Date and time of last initialization • Date and time of last synchronization: o Number of transactions o Size of transactions in MB o Duration of session o Duration of last merge on client • DX files last routed from the Siebel Server • DX files last routed to the Siebel Server • DX files that this user received and merged in the Siebel Server • DX files received and merged in the local database for this user This report also indicates if the user is active. If the user is not active, then displays the last accessed date and the name of the Routing Model that is associated with the user.
Regional Node Status Report	Client Status	Displays information for server nodes that contain subordinate regional nodes, including the following information about the regional node: • Date and time of last extraction • Date and time of last initialization • Date and time of last synchronization • DX files last routed to the node from the parent server • DX files last routed from the regional node to the parent server • DX files received and merged to the parent server • DX files received and merged to the regional database The report also indicates if the regional node is currently active or end dated and the routing group of the regional node.
Synchronization Frequency Report	Synchronization Sessions	Displays how frequently Siebel Remote synchronizes each user for a period of time. Each line of the report includes the following information: • Mobile User ID • App Server Name • The number of times the user synchronized
Synchronization Session Report	Synchronization Sessions	Displays information about synchronizations for every user for a period of time. The report provides user information and details of these synchronizations.
Transaction Backlog Status Report	Transaction Log	Displays information about transactions that are pending in the queue from active users and regional nodes. It starts with the most recent transaction

Name of Report	View	Description
		that Siebel Remote created on the headquarters node at the time you run the report. Fields in this report include the name of the remote client and the number of pending transactions. For more information about headquarters nodes, see *Overview of Siebel Replication Manager*.
Transaction Processor Status Report	Processor Status	Displays the status of active and inactive Transaction Processor entries that exist in the current Siebel Server. This report includes the following information: • Date and time of last run • Duration of last run • Number of transactions and operations copied • Last DX file that Siebel Remote created and removed from the **docking \txnproc** folder on the corresponding Siebel Server
Transaction Router Backlog Report	Transaction Log	Displays the following information: • The number of transactions that Siebel Remote could potentially route to the active users or regional nodes. Siebel Remote calculates this number with respect to the most recent transaction that it created on the headquarters node at the time you run the report. For more information about headquarters nodes, see *Overview of Siebel Replication Manager*. • The latency of the active users and regional nodes with respect to the time that you run the report. This report displays the following information for backlog and latency: o Total o Average o Maximum o Minimum *Latency* is the time difference between the time when Siebel Remote routed the last transaction to the user or regional node and the time when you run the report.

Siebel Server Features on a Regional Node

Although most Siebel Server processes run only on the Siebel Server of the headquarters node, you can use some features and server components on regional nodes.

The following table lists the features and server components that you can use on regional nodes.

Item	Type	Member of	Notes
Advanced Search	feature	Not applicable.	Not applicable.

Item	Type	Member of	Notes
Basic Siebel Call Center functionality	feature	Not applicable.	Associated with the Call Center Object Manager server component. Includes the following items: • Quotes • Opportunities • Forecasting • Service Requests • Households • Campaigns • SmartScripts
Basic Siebel Sales functionality	feature	Not applicable.	Associated with Sales Object Manager server component. Includes the same items as the Basic Siebel Call Center functionality.
Call Center Object Manager	server component	Siebel Call Center component group	Not applicable.
Communications Configuration Manager	server component	Communications Management component group	Used by the Computer Telephony Integration (CTI) feature.
Communications Outbound Manager	server component	Communications Management component group	Not applicable.
Communications Session Manager	server component	Communications Management component group	Used by the Computer Telephony Integration (CTI) feature.
CTI (Computer Telephony Integration)	feature	Not applicable.	Associated with Communications Configuration Manager and Communications Session Manager server components. Siebel Remote does not support live call transfer from a user on one regional node to a user on another regional node.
Database Extract	server component	Disconnected Mobile Synchronization component group	Siebel Remote uses some of the components in this component group (alias MobileSync).
Document Server	server component	Siebel eDocuments component group	For the Correspondence, Proposals, and Presentations features.
EAI Object Manager	server component	Enterprise Application Integration (EAI) component group	Not applicable.

Item	Type	Member of	Notes
Field Service Object Manager	server component	Field Service component group	Not applicable.
Generate New Database	server component	Siebel Remote component group	Not applicable.
MQSeries Server Receiver	server component	Enterprise Application Integration (EAI) component group	Not applicable.
MSMQ Receiver	server component	Enterprise Application Integration (EAI) component group	Not applicable.
Outbound Communications	feature	Not applicable.	Associated with the Communications Outbound Manager server component.
Parallel Database Extract	server component	Disconnected Mobile Synchronization component group	Not applicable.
Replication Agent	server component	Siebel Remote component group	Not applicable.
Report Server	feature	Not applicable.	Can be used to create reports on the regional node.
Runtime Events	feature	Not applicable.	Siebel Remote does not support runtime events that contain wait states on a regional node.
Sales Object Manager	server component	Siebel Sales	Not applicable.
Self Service Object Manager	server component	Siebel Call Center component group	Not applicable.
State Model	feature	Not applicable.	Not applicable.
Synchronization Manager	server component	Siebel Remote component group	Not applicable.
Transaction Merger	server component	Siebel Remote component group	Not applicable.
Transaction Processor	server component	Disconnected Mobile Synchronization component group	Not applicable.

Item	Type	Member of	Notes
Transaction Router	server component	Disconnected Mobile Synchronization component group	Not applicable.
Workflow Process Batch Manager	server component	Workflow Management component group	Not applicable.
Workflow Process Manager	server component	Workflow Management component group	Not applicable.
Workflow Processes	feature	Not applicable.	Associated with the Workflow Process Batch Manager and the Workflow Process Manager server components. Siebel Remote does not support the following kinds of workflow processes on a regional node: • Processes that you define as persistent • Processes that contain wait states with durations that are expressed in minutes, hours, or days • Processes that a workflow policy starts Oracle's Siebel Remote does not support a workflow policy or a persistent workflow in a replicated environment.

Parameters of the Regional Database Initialization Program

The following table lists some of the parameters and corresponding flags that are available for the Srvrinit utility.

Parameter	Flag	Description	Required
16K Table Space	ks	For IBM DB2 installations only, provide the name of the 16K Table space. For more information, see the *Siebel Installation Guide* .	No
32K Table Space	ls	For IBM DB2 installations only, provide the name of the 32K Table space. For more information, see the *Siebel Installation Guide* .	No

Parameter	Flag	Description	Required
File System	filesystem	File system location on the regional node. The File System parameter must reference the Siebel File System directory with the `att` subdirectory included in order for the Srvrinit utility to automatically copy files into this subdirectory.	Yes
Help	? help	Help for usage.	No
Index Space	is	For Oracle Database and IBM DB2 installations only. Space on the regional database where indexes are created.	No
Initialize on new database	init	Specifies if the regional database is empty or not: • **Y.** Indicate the initialization of the Siebel Server of a regional node on a new database. • **N.** Indicate an upgrade of the existing regional database with a new database extract. The default value is N. An old transaction might be invalid for the new schema and can cause failure. You must set this parameter to Y during a major upgrade.	No
(Not applicable.)	comm	Communication parameters for low-bandwidth connections.	No
(Not applicable.)	l	Language code. The default value is enu.	No
(Not applicable.)	v	Verbose mode, that you can set to Y or N. The default value is N.	No
ODBC Data Source	d	Name of ODBC data source to connect to the regional node.	Yes
Parent AppServer Name	dockconnstring	Name of the Siebel Server at the parent node where Siebel Remote does the Siebel database extract.	Yes
Regional Server Name	n	Name of the regional node.	Yes
Repository Name	reposname	Name of the repository, which is typically Siebel Repository.	Yes
Run in Parallel/Number of Threads	para	Specifies to run srvrinit in parallel. Specifies the number of threads to run.	No

Parameter	Flag	Description	Required
Schema Qualifier	sq	For IBM DB2 for z/OS only, the name that the Srvrinit utility uses to qualify database objects it creates that the Siebel application requires.	Yes
Server Root Directory	homedir	Root folder of the Siebel Server on the Regional node. In this document, `SIEBEL_ROOT` is the root folder where you install the Siebel Server.	Yes
Table Grouping File	tg	For IBM DB2 for z/OS only. Full path to the storage control file, which is a file that contains declarations for database objects.	Yes
Table Owner Password/ Privileged User Password	tp	Password of the table owner on the regional database. For IBM DB2 for z/OS, this password is the same as the Privileged User Password, which is the password for Privileged User ID.	Yes
Table Owner/Privileged User ID	t	Logon of the Table Owner on the regional database. It must include privileges to create database objects. For IBM DB2 for z/OS, this logon is the same as the Privileged User ID. This account is a user account that includes the necessary database authority and privileges to create, access, and modify Siebel database objects and native database objects and the operations that are required to implement the Siebel application. These environments include rigid controls on user identification. An account must correspond to a real person.	Yes
Table Space	ts	For IBM DB2 and Oracle Database installations only. Space on the regional database where tables are created.	No
User Name	u	User name to authenticate the regional database with the Siebel Server of the headquarters node. You can use a database user who is associated with the regional database during the setup, but this user must possess administrator privileges to create logins in the master database, such as SADMIN. For more information about headquarters nodes, see *Overview of Siebel Replication Manager*.	Yes
User Password	p	Password to authenticate the regional database with the Siebel Server of the headquarters node. If you configure the users on the regional database, then Replication Manager uses the password that you specify.	Yes