Oracle® Database Appliance X11

Service Manual

G42898-01
November 2025

Oracle Database Appliance X11 Service Manual,

G42898-01

Copyright © 2025, Oracle and/or its affiliates.

Primary Author: Ralph Woodley

This software and related documentation are provided under a license agreement containing restrictions on use and disclosure and are protected by intellectual property laws. Except as expressly permitted in your license agreement or allowed by law, you may not use, copy, reproduce, translate, broadcast, modify, license, transmit, distribute, exhibit, perform, publish, or display any part, in any form, or by any means. Reverse engineering, disassembly, or decompilation of this software, unless required by law for interoperability, is prohibited.

The information contained herein is subject to change without notice and is not warranted to be error-free. If you find any errors, please report them to us in writing.

If this is software, software documentation, data (as defined in the Federal Acquisition Regulation), or related documentation that is delivered to the U.S. Government or anyone licensing it on behalf of the U.S. Government, then the following notice is applicable:

U.S. GOVERNMENT END USERS: Oracle programs (including any operating system, integrated software, any programs embedded, installed, or activated on delivered hardware, and modifications of such programs) and Oracle computer documentation or other Oracle data delivered to or accessed by U.S. Government end users are "commercial computer software," "commercial computer software documentation," or "limited rights data" pursuant to the applicable Federal Acquisition Regulation and agency-specific supplemental regulations. As such, the use, reproduction, duplication, release, display, disclosure, modification, preparation of derivative works, and/or adaptation of i) Oracle programs (including any operating system, integrated software, any programs embedded, installed, or activated on delivered hardware, and modifications of such programs), ii) Oracle computer documentation and/or iii) other Oracle data, is subject to the rights and limitations specified in the license contained in the applicable contract. The terms governing the U.S. Government's use of Oracle cloud services are defined by the applicable contract for such services. No other rights are granted to the U.S. Government.

This software or hardware is developed for general use in a variety of information management applications. It is not developed or intended for use in any inherently dangerous applications, including applications that may create a risk of personal injury. If you use this software or hardware in dangerous applications, then you shall be responsible to take all appropriate fail-safe, backup, redundancy, and other measures to ensure its safe use. Oracle Corporation and its affiliates disclaim any liability for any damages caused by use of this software or hardware in dangerous applications.

Oracle®, Java, MySQL, and NetSuite are registered trademarks of Oracle and/or its affiliates. Other names may be trademarks of their respective owners.

Intel and Intel Inside are trademarks or registered trademarks of Intel Corporation. All SPARC trademarks are used under license and are trademarks or registered trademarks of SPARC International, Inc. AMD, Epyc, and the AMD logo are trademarks or registered trademarks of Advanced Micro Devices. UNIX is a registered trademark of The Open Group.

This software or hardware and documentation may provide access to or information about content, products, and services from third parties. Oracle Corporation and its affiliates are not responsible for and expressly disclaim all warranties of any kind with respect to third-party content, products, and services unless otherwise set forth in an applicable agreement between you and Oracle. Oracle Corporation and its affiliates will not be responsible for any loss, costs, or damages incurred due to your access to or use of third-party content, products, or services, except as set forth in an applicable agreement between you and Oracle.

Contents

Preface

Audience i
Documentation Accessibility i
Related Documents i
Conventions i

1 Overview of System Status Indicators and LEDs

Oracle Database Appliance X11-S/X11-L Status Indicators 1
- Oracle Database Appliance X11-S/X11-L Server Status Indicators 1
  - Server Front Panel Status Indicators 1
  - Server Back Panel Status Indicators 4

Oracle Database Appliance X11-HA Status Indicators 6
- Oracle Database Appliance X11-HA Server Node Status Indicators 7
  - Server Node Front Panel Status Indicators 7
  - Server Node Back Panel Status Indicators 9
- Oracle Database Appliance X11-HA Storage Shelf Indicators 11
  - Storage Shelf Front Panel Status Indicators 11
  - Storage Shelf Back Panel Status Indicators 13

2 Preparing Oracle Database Appliance for Service

Servicing System Components 1
- Illustrated Parts Breakdown 1
- Customer-Replaceable Units 3
- Field-Replaceable Units 3

Safety Precautions 4
Safety Symbols 4
Electrostatic Discharge Safety 5
FRU Key Identity Properties (KIP) Automated Update 5
Required Service Tools 6
Preparing the Server for Component Replacement 6
- Powering Down the Server 7
  - Power Down the Server Gracefully Using Oracle ILOM CLI 7

Copyright © 2025, Oracle and/or its affiliates.

Power Down the Server Gracefully Using Oracle ILOM Web Interface 8
Power Down the Server Gracefully Using the On/Standby Button 9
Power Down the Server for Immediate Shutdown Using Oracle ILOM CLI 9
Power Down the Server for Immediate Shutdown Using Oracle ILOM Web Interface 10
Power Down the Server for Immediate Shutdown Using the On/Standby Button 10
Disconnect Cables From the Server 11
Stabilize the Rack 11
Extend the Server to the Maintenance Position 12
Remove the Cable Management Arm 13
Remove the Server From the Rack 16
Take Antistatic Measures 17
Remove the Server Top Cover 17
Remove the Air Baffle 18

3 Servicing CRUs That Do Not Require System Power Off

Oracle Database Appliance X11 Server Hot Pluggable Components 1
Servicing NVMe Storage Drives (CRU) 2
Replacing an NVMe Storage Drive 2
Adding NVMe Expansion Storage 4
Servicing Fan Modules (CRU) 5
Remove a Fan Module 5
Install a Fan Module 7
Servicing Power Supply Modules (CRU) 7
Remove a Power Supply 8
Install a Power Supply 9
Oracle Database Appliance X11-HA Storage Shelf Hot Pluggable Components 10
Adding Optional Storage Shelf Drives (CRU) 11
Replace a Storage Shelf HDD or SSD (CRU) 15
Replace a Storage Shelf Power Supply (CRU) 16
Replace a Storage Shelf I/O Module (CRU) 19

4 Servicing CRUs That Require System Power Off

Servicing Internal M.2 Flash SSDs (CRU) 1
Identify and Remove an M.2 Flash SSD 2
Install an M.2 Flash SSD 4
Remove a Flash Riser Board 5
Install a Flash Riser Board 7
Servicing DIMMs (CRU) 8
DIMM and Processor Physical Layout 9
DIMM Population Scenarios 10

Copyright © 2025, Oracle and/or its affiliates.

DIMM Population Rules 10
Populating DIMMs for Optimal System Performance 11
Using the Server Fault Remind Button 11
Identify and Remove a DIMM 12
Install a DIMM 13
Servicing PCIe Cards (CRU) 15
PCIe Slot Locations 15
Adding Optional PCIe Cards (CRU) 16
Remove a Half Height PCIe Card 18
Install a Half Height PCIe Card 19
Servicing the Battery (CRU) 21
Remove the Battery 21
Install the Battery 24

5 Servicing FRUs

Servicing Processors (FRU) 1
Processor Overview 2
Identify and Remove a Processor 3
Install a Processor 12
Servicing the Fan Tray (FRU) 18
Remove the Fan Tray 19
Install the Fan Tray 20
Servicing the Disk Backplane (FRU) 22
Remove the 4-Drive Backplane 23
Install the 4-Drive Backplane 26
Remove a Disk Backplane Cable 30
Install a Disk Backplane Cable 32
Servicing the Front LED Indicator Module (FRU) 34
Remove the Front LED Indicator Module 34
Install the Front LED Indicator Module 36
Servicing the PCIe Slot Flyover Cable (FRU) 38
Remove the PCIe Flyover Cable 38
Install the PCIe Flyover Cable 39
Servicing the Motherboard Assembly (FRU) 40
Remove the Motherboard Assembly 40
Install the Motherboard Assembly 50
Component Fault Management 53

6 Returning Oracle Database Appliance to Operation

Install the Air Baffle 1

Copyright © 2025, Oracle and/or its affiliates.

Install the Server Top Cover 2
Remove Antistatic Measures 2
Reinstall the Server Into the Rack 3
Return the Server to the Normal Rack Position 4
Install the Cable Management Arm (Optional) 5
Powering On Oracle Database Appliance 13

7 Server Node Diagnostic Tools and Resetting the Service Processor

Server Node Diagnostic Tools 1
Manually Resetting a Server's Service Processor 2

8 Server Basic Input/Output System (BIOS)

Accessing the BIOS Setup Utility 1
- BIOS Setup Utility Menus 1
- BIOS Key Mappings 2
- Access BIOS Setup Utility Menus 2
- Navigate BIOS Setup Utility Menus 3

Using UEFI BIOS 4
- Configuration Utilities for Add-In Cards 4
- Configure and Manage BIOS Using Oracle ILOM 4
- UEFI Secure Boot 4

Index

Copyright © 2025, Oracle and/or its affiliates.

Preface

This guide provides instructions for servicing the Oracle Database Appliance.

- Audience
- Documentation Accessibility
- Related Documents
- Conventions

Audience

This document is intended for technicians, system administrators, and authorized service providers responsible for installing the Oracle Database Appliance.

Documentation Accessibility

For information about Oracle's commitment to accessibility, visit the Oracle Accessibility Program website at https://www.oracle.com/pls/topic/lookup?ctx=acc&id=docacc.

Access to Oracle Support

Oracle customers that have purchased support have access to electronic support through My Oracle Support. For information, visit https://www.oracle.com/pls/topic/lookup?ctx=acc&id=info or visit https://www.oracle.com/pls/topic/lookup?ctx=acc&id=trs if you are hearing impaired.

Related Documents

For more information about Oracle Database Appliance, go to https://www.oracle.com/goto/oda/docs and click the appropriate release. The following documents are published in the Oracle Database Appliance online documentation library:

- *Oracle Database Appliance Release Notes*
- *Oracle Database Appliance Licensing Information User Manual*
- *Oracle Database Appliance Security Guide*
- *Oracle Database Appliance Accessibility Guide*
- *Oracle Database Appliance Deployment and User's Guide (model-specific)*
- *Oracle Database Appliance Owner's Guide*
- *Oracle Database Appliance Service Manual*

Conventions

The following text conventions are used in this document:

Copyright © 2025, Oracle and/or its affiliates.

Convention	Meaning
boldface	Boldface type indicates graphical user interface elements associated with an action or terms defined in the text.
italic	Italic type indicates book titles, emphasis, or placeholder variables for which you supply particular values.
`monospace`	Monospace type indicates commands within a paragraph, URLs, code in examples, text that appears on the screen, or text that you enter.
# prompt	The pound (#) prompt indicates a command that is run as the root user.

Copyright © 2025, Oracle and/or its affiliates.

1

Overview of System Status Indicators and LEDs

Learn about various Oracle Database Appliance model indicators and LEDs.

> **Note**
>
> For information about system features and racking, refer to the *Oracle Database Appliance Owner's Guide.* For information about cabling, Oracle ILOM initial setup, and appliance software setup, refer to the *Oracle Database Appliance Deployment and User's Guide* for your model.

- Oracle Database Appliance X11-S/X11-L Status Indicators
  Learn about Oracle Database Appliance X11-S/X11-L status indicators.
- Oracle Database Appliance X11-HA Status Indicators
  Learn about Oracle Database Appliance X11-HA status indicators.

Oracle Database Appliance X11-S/X11-L Status Indicators

Learn about Oracle Database Appliance X11-S/X11-L status indicators.

- Oracle Database Appliance X11-S/X11-L Server Status Indicators
  See a description of the front and back status indicators for the Oracle Database Appliance X11-S/X11-L.

Oracle Database Appliance X11-S/X11-L Server Status Indicators

See a description of the front and back status indicators for the Oracle Database Appliance X11-S/X11-L.

- Server Front Panel Status Indicators
  See a listing of the various font panel status indicators for the Oracle Database Appliance X11-S/X11-L.
- Server Back Panel Status Indicators
  See a listing of the various back panel status indicators for the Oracle Database Appliance X11-S/X11-L.

Server Front Panel Status Indicators

See a listing of the various font panel status indicators for the Oracle Database Appliance X11-S/X11-L.

The following figure shows the Oracle Database Appliance X11-S/X11-L server front panel includes indicators for the system and storage drives.

Copyright © 2025, Oracle and/or its affiliates.

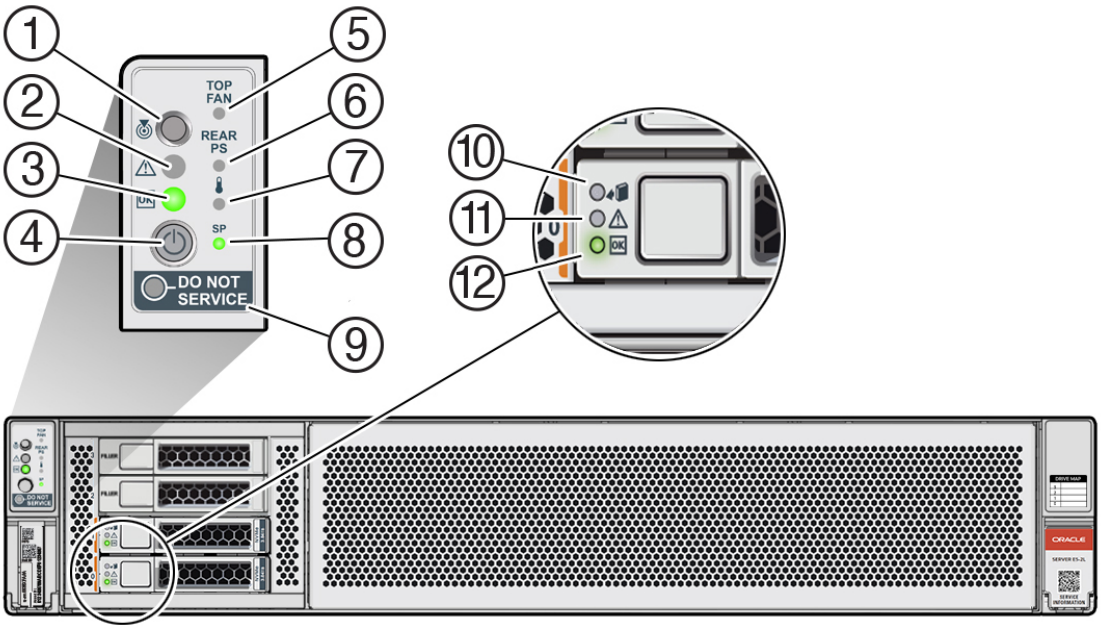

Callout	Indicator/LED: Color	State Meaning
1	Locate: white	• Off - Normal operation. • Fast blink - This LED blinks to help locate the system. Operators can turn this indicator on and off remotely using Oracle ILOM. • Pressing this button toggles the fast blink on or off.
2	Service Required: amber	• Off - Normal operation. • On - A fault is present in the server node. The lighting of this indicator is always accompanied by a system console message that includes a recommended service action.

Copyright © 2025, Oracle and/or its affiliates.

Callout	Indicator/LED: Color	State Meaning
3	OK: green	Indicates the operational state of the server node: • Off - AC power is either not present or the Oracle ILOM service processor (SP) boot process is not complete. • Steady blink - Standby power is on and the Oracle ILOM SP is running, but the server host power is off. • Slow blink - Startup/ shutdown sequence has been initiated on the server host. During startup, the power-on self tests are running on the system. During shutdown, the server host is shutting down and transitioning from full power to standby power. • On - The server host is powered on and is in the process of booting or is running the operating system.
4	Power button	Press to apply full power and start the server host. Press again to transition from full power to standby power where only the Oracle ILOM SP is running.
5	Top fan: amber	Indicates that one (or more) of the internal fan modules has failed. • Off - Indicates steady state; no service is required. • On - Indicates service required; service the failed fan module.
6	Rear PS: amber	Indicates that one (or more) of the power supplies has failed. • Off - Indicates steady state; no service is required. • On - Indicates service required; service the failed power supply.

Copyright © 2025, Oracle and/or its affiliates.

Callout	Indicator/LED: Color	State Meaning
7	Over temperature warning: amber	• Off - Normal operation; no service is required. • On - The system is experiencing an over temperature warning condition. This is a warning indication, not a fatal over temperature. Failure to correct this condition might result in the system overheating and shutting down unexpectedly.
8	Service processor (SP): green	• Off - The service processor (SP) is not running. • On - The SP is fully operational. • Slow blink - SP is booting.
9	DO NOT SERVICE: white	The DO NOT SERVICE indicator is not used for this product.
10	Drive Ready-to-Remove: blue	• Off - The storage drive has not been prepared for removal. • On - The storage drive can be removed safely during a hot-plug operation.
11	Drive Service Required: amber	• Off - The storage drive is operating normally. • On - The system has detected a fault with the storage drive.
12	Drive OK: green	• Off - Power is off or the installed drive is not recognized by the system. • On - The drive is engaged and is receiving power. • Random blink - There is disk activity. The indicator blinks on and off to indicate activity.

Server Back Panel Status Indicators

See a listing of the various back panel status indicators for the Oracle Database Appliance X11-S/X11-L.

The following figure shows the Oracle Database Appliance X11-S/X11-L server back panel and includes indicators for the system, power supplies and network ports.

Copyright © 2025, Oracle and/or its affiliates.

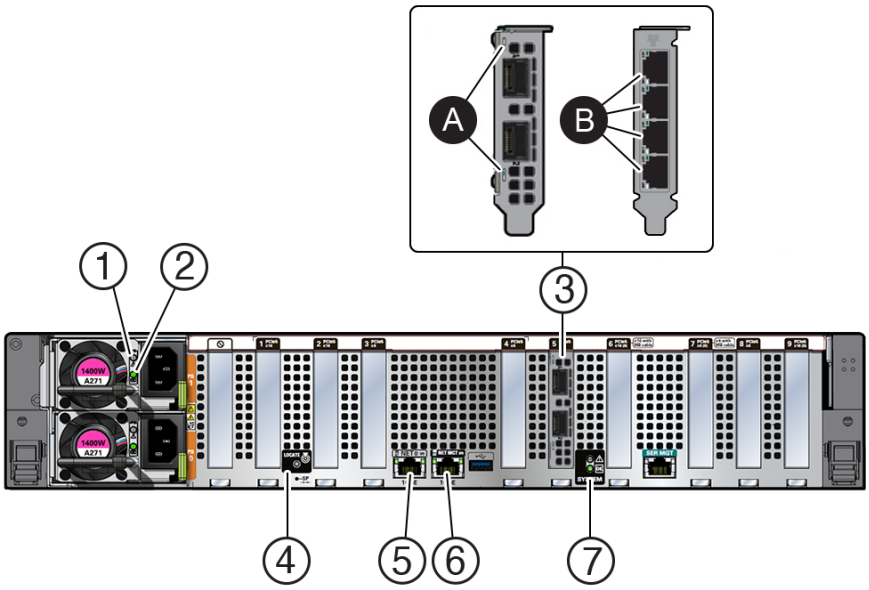

Callout	Indicator/LED: Color	State Meaning
1	PS Service Required: amber	• Off - Normal operation. • On - The power supply (PS) has detected a PS fan failure, PS overtemperature, PS over current, or PS over or under voltage.
2	PS OK: green	• Off - No AC power is present. • On - Normal operation. Input AC power and DC output voltage are within specification. • Slow blink - Normal operation. Input power is within specification. DC output voltage is not enabled.

Copyright © 2025, Oracle and/or its affiliates.

Callout	Indicator/LED: Color	State Meaning
3	• 3a. Oracle Dual Port 25 Gb Ethernet Adapter, Mellanox, SFP28 ports: green/amber *--or--* • 3b. Oracle Quad Port 10GBase-T Adapter RJ-45 ports: green/yellow	Oracle Dual Port 25 Gb Ethernet Adapter, Mellanox. Each port has one bi-colored status LED: • Off - No link. • Solid green - Valid link. • Flashing green - Link with packet activity. • Blinking amber (4Hz) - Problem with the link. Oracle Quad Port 10GBase-T Adapter. Each of the four ports has: • Top activity indicator: – Off - No activity. – Flashing - Packet activity. • Bottom link indicator: – Off - 100 Mb link. – Green On - 10GbE link. – Yellow On - 1GbE link.
4	System locate: white	This operates in the same way as on the front panel.
5	NET 0 port: green	10/100/1000 BASE-T Ethernet interface. Bottom left activity indicator: • Off - No link or link down. • On - Link up. • Blinking - Packet activity. Bottom right link indicator: • Off - 10/100BASE-T link. • On - 1000Base-T link.
6	NET MGT port: green	10/100/1000 BASE-T Ethernet management interface. Top left speed indicator: • Off - 10/100BASE-T link. • On - Green for 1000Base-T link. Top right activity indicator: • Off - No link or link down. • On - Link up. • Blinking - Packet activity.
7	System service required and OK: various	These operate in the same way as on the front panel.

Oracle Database Appliance X11-HA Status Indicators

Learn about Oracle Database Appliance X11-HA status indicators.

- Oracle Database Appliance X11-HA Server Node Status Indicators
  See a description of the Oracle Database Appliance X11-HA server node front and back status indicators.

Copyright © 2025, Oracle and/or its affiliates.

- Oracle Database Appliance X11-HA Storage Shelf Indicators
  See a description of the front and back Oracle Database Appliance X11-HA storage shelf status indicators.

Oracle Database Appliance X11-HA Server Node Status Indicators

See a description of the Oracle Database Appliance X11-HA server node front and back status indicators.

- Server Node Front Panel Status Indicators
  See a listing of the various font panel status indicators for the Oracle Database Appliance X11-HA server node.
- Server Node Back Panel Status Indicators
  See a listing of the various back panel status indicators for the Oracle Database Appliance X11-HA server node.

Server Node Front Panel Status Indicators

See a listing of the various font panel status indicators for the Oracle Database Appliance X11-HA server node.

The following figure shows the Oracle Database Appliance X11-HA server node front panel and includes indicators for the system.

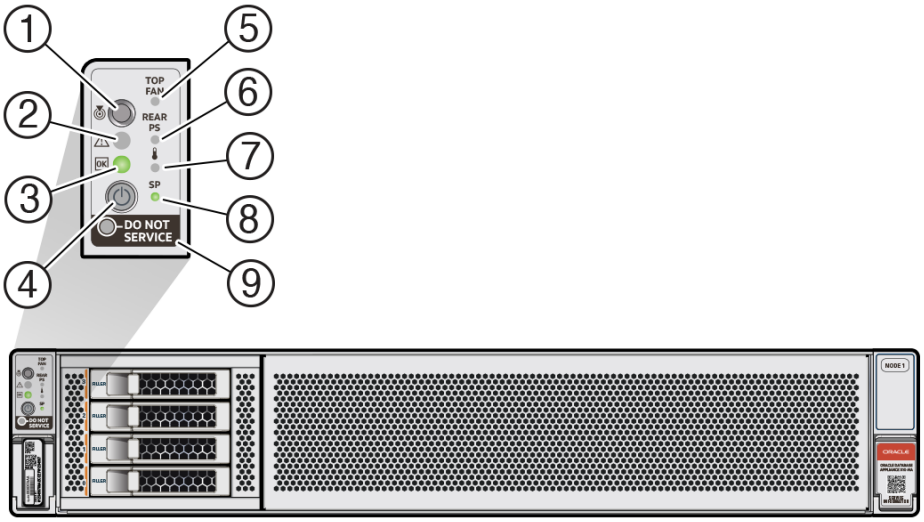

Callout	Indicator/LED: Color	State Meaning
1	Locate: white	• Off - Normal operation. • Fast blink - This LED blinks to help locate the system. Operators can turn this indicator on and off remotely using Oracle ILOM. • Pressing this button toggles the fast blink on or off.

Copyright © 2025, Oracle and/or its affiliates.

Callout	Indicator/LED: Color	State Meaning
2	Service Required: amber	• Off - Normal operation. • On - A fault is present in the server node. The lighting of this indicator is always accompanied by a system console message that includes a recommended service action.
3	OK: green	Indicates the operational state of the server node: • Off - AC power is either not present or the Oracle ILOM service processor (SP) boot process is not complete. • Steady blink - Standby power is on and the Oracle ILOM SP is running, but the server host power is off. • Slow blink - Startup/ shutdown sequence has been initiated on the server host. During startup, the power-on self tests are running on the system. During shutdown, the server host is shutting down and transitioning from full power to standby power. • On - The server host is powered on and is in the process of booting or is running the operating system.
4	Power button	Press to apply full power and start the server host. Press again to transition from full power to standby power where only the Oracle ILOM SP is running.
5	Top fan: amber	Indicates that one (or more) of the internal fan modules has failed. • Off - Indicates steady state; no service is required. • On - Indicates service required; service the failed fan module.
6	Rear PS: amber	Indicates that one (or more) of the power supplies has failed. • Off - Indicates steady state; no service is required. • On - Indicates service required; service the failed power supply.

Copyright © 2025, Oracle and/or its affiliates.

Callout	Indicator/LED: Color	State Meaning
7	Over temperature warning: amber	• Off - Normal operation; no service is required. • On - The system is experiencing an over temperature warning condition. This is a warning indication, not a fatal over temperature. Failure to correct this condition might result in the system overheating and shutting down unexpectedly.
8	Service processor (SP): green	• Off - The service processor (SP) is not running. • On - The SP is fully operational. • Slow blink - SP is booting.
9	DO NOT SERVICE: white	The DO NOT SERVICE indicator is not used for this product.

Server Node Back Panel Status Indicators

See a listing of the various back panel status indicators for the Oracle Database Appliance X11-HA server node.

The following figure shows the Oracle Database Appliance X11-HA server node back panel and includes indicators for the system, power supplies and network ports.

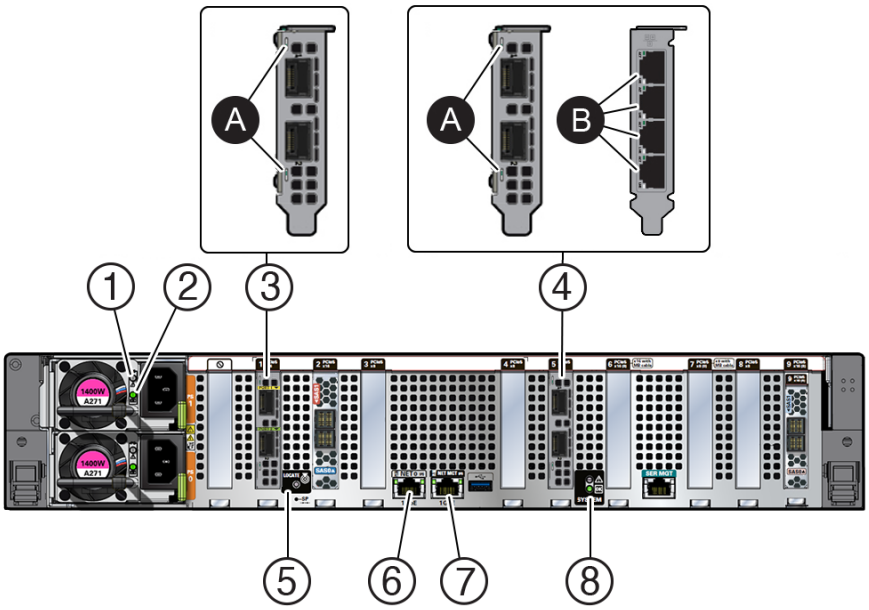

Copyright © 2025, Oracle and/or its affiliates.

Callout	Indicator/LED: Color	State Meaning
1	PS Service Required: amber	• Off - Normal operation. • On - The power supply (PS) has detected a PS fan failure, PS overtemperature, PS over current, or PS over or under voltage.
2	PS OK: green	• Off - No AC power is present. • On - Normal operation. Input AC power and DC output voltage are within specification. • Slow blink - Normal operation. Input power is within specification. DC output voltage is not enabled.
3	3a. Oracle Dual Port 25 Gb Ethernet Adapter, Mellanox. Private cluster interconnect SFP28 PORT 1 and 2: green/amber	Oracle Dual Port 25 Gb Ethernet Adapter, Mellanox. Each port has one bi-colored status LED: • Off - No link. • Solid green - Valid link. • Flashing green - Link with packet activity. • Blinking amber (4Hz) - Problem with the link.
4	• 4a. Oracle Dual Port 25 Gb Ethernet Adapter, Mellanox, SFP28 ports: green/amber *--or--* • 4b. Oracle Quad Port 10GBase-T Adapter RJ-45 ports: green/yellow	Oracle Dual Port 25 Gb Ethernet Adapter, Mellanox. Each port has one bi-colored status LED: • Off - No link. • Solid green - Valid link. • Flashing green - Link with packet activity. • Blinking amber (4Hz) - Problem with the link. Oracle Quad Port 10GBase-T Adapter. Each of the four ports has: • Top activity indicator: – Off - No activity. – Flashing - Packet activity. • Bottom link indicator: – Off - 100 Mb link. – Green On - 10GbE link. – Yellow On - 1GbE link.
5	System locate: white	This operates in the same way as on the front panel.

Copyright © 2025, Oracle and/or its affiliates.

Callout	Indicator/LED: Color	State Meaning
6	NET 0 port: green	10/100/1000 BASE-T Ethernet interface. Top right speed indicator: • Off - 10/100BASE-T link. • On - Green for 1000Base-T link. Top left link indicator: • Off - No link or link down. • On - Link up. • Blinking - Packet activity.
7	NET MGT port: green	10/100/1000 BASE-T Ethernet management interface. Top left speed indicator: • Off - 10/100BASE-T link. • On - Green for 1000Base-T link. Top right activity indicator: • Off - No link or link down. • On - Link up. • Blinking - Packet activity.
8	System service required and OK: various	These operate in the same way as on the front panel.

Oracle Database Appliance X11-HA Storage Shelf Indicators

See a description of the front and back Oracle Database Appliance X11-HA storage shelf status indicators.

- Storage Shelf Front Panel Status Indicators
  See a listing of the various font panel status indicators for the Oracle Database Appliance X11-HA storage shelf.
- Storage Shelf Back Panel Status Indicators
  See a listing of the various back panel status indicators for the Oracle Database Appliance X11-HA storage shelf.

Storage Shelf Front Panel Status Indicators

See a listing of the various font panel status indicators for the Oracle Database Appliance X11-HA storage shelf.

The following figure shows the controls and indicators on the for the Oracle Database Appliance X11-HA storage shelf (DE3-24C) front panel and drives.

Copyright © 2025, Oracle and/or its affiliates.

> **Note**
>
> The 2 or 3 character LED enclosure ID display panel on the front of the storage shelf is not used with the Oracle Database Appliance product. Any numbers or letters displayed in this panel other than zeros could indicate a fault with either the panel, its cabling (neither of which are customer replaceable), or some other storage shelf component.

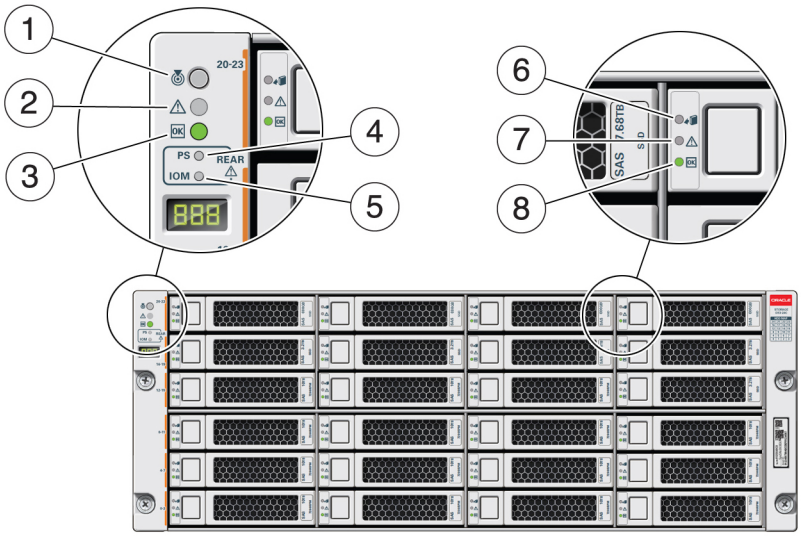

Callout	Indicator/LED: Color	State Meaning
1	Locate: white	• Off - Normal operation. • Fast blink - This LED blinks to help locate the system. Operators can turn this indicator on and off remotely using Oracle ILOM. • Pressing this button toggles the fast blink on or off.
2	Service Required: amber	• Off - Normal operation. • Steady on - A fault is present in the storage shelf.
3	OK: green	• Off - The storage shelf is unplugged or turned off. • On - The storage shelf is powered on and operating normally.
4	Power Supply fault indicator: amber	• Off - Normal operation. • On - Indicates a fault with a power supply. View the LEDs at the back of the storage shelf to determine which power supply has the fault.

Copyright © 2025, Oracle and/or its affiliates.

Callout	Indicator/LED: Color	State Meaning
5	SAS I/O Module fault indicator: amber	• Off - Normal operation. • On - Indicates a fault with a SAS I/O module. View the LEDs at the back of the storage shelf to determine which module has the fault.
6	Ready-to-Remove: blue	• Off - The storage drive has not been prepared for removal. • On - The storage drive can be safely removed during a hot-plug operation.
7	Drive Service Required: amber	• Off - Normal operation. • Steady on - A fault is present in the disk drive.
8	Power/Activity: green	• Off - The drive is powered off or the installed drive is not recognized by the system. • On - The drive is installed and recognized by the system but there is no drive activity. • Blink - The LED blinks randomly in response to data being written to or read from the drive.

Storage Shelf Back Panel Status Indicators

See a listing of the various back panel status indicators for the Oracle Database Appliance X11-HA storage shelf.

The following figure shows the controls and indicators on the Oracle Database Appliance X11-HA storage shelf (DE3-24C) back panel.

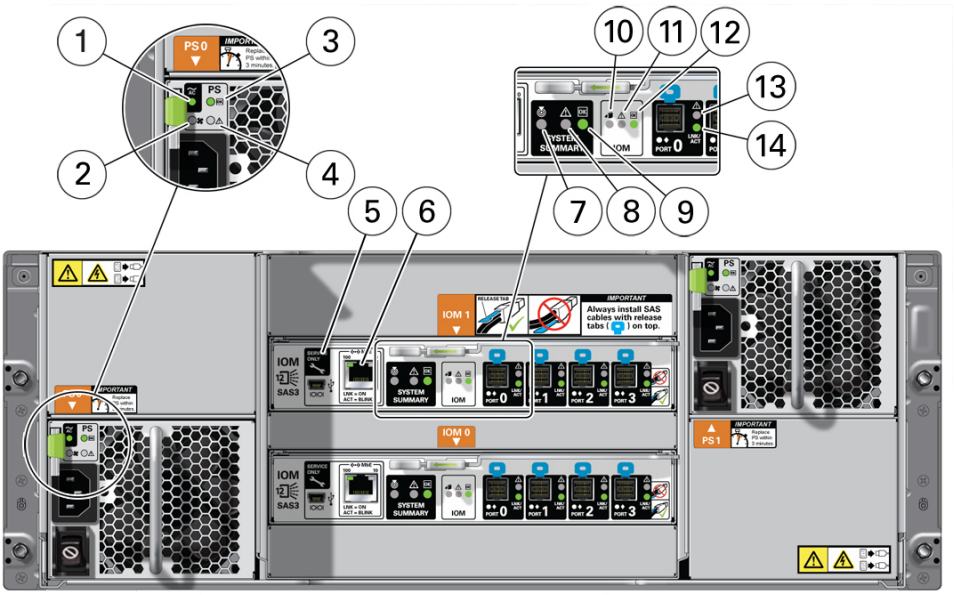

Copyright © 2025, Oracle and/or its affiliates.

Callout	Indicator/LED: Color	State Meaning
1	AC power fault indicator: amber	• Off - Normal operation. • On - Indicates an AC power fault.
2	Fan fail indicator: amber	• Off - Normal operation. • On - The fan is faulty.
3	Power supply status indicator: green	• Off - The power supply is unplugged or turned off. • On - The power supply is operating normally.
4	DC power fail indicator: amber	• Off - Normal operation. • On - The power supply is faulty.
5	Reserved	This port is reserved for Oracle Service.
6	Network port (reserved)	This port is reserved for Oracle Service.
7	Locate: white	• Off - Normal operation. • Fast blink - This LED blinks to help locate the system. Operators can turn this indicator on and off remotely using Oracle ILOM. • Pressing this button toggles the fast blink on or off.
8	Service Required: amber	• Off - Normal operation. • Steady on - A fault is present in the storage shelf.
9	OK: green	• Off - The storage shelf is unplugged or turned off. • On - The storage shelf is powered on and operating normally.
10	SAS I/O Module Ready-to-Remove: blue	• Off - The I/O module has not been prepared for removal. • On - The I/O module can be safely removed during a hot-plug operation.
11	SAS I/O Module Service Required indicator: amber	• Off - Normal operation. • Steady on - A fault is present in the SAS I/O module.
12	SAS I/O Module OK: green	• Off - The I/O module is unplugged or turned off. • On - The I/O module is powered on and operating normally.
13	Host SAS port Service Required indicator: amber	• Off - Normal operation. • Steady on - A fault is present with the port or connection.
14	Host SAS port activity indicator: green	• Off - No link activity. • Random blinking - Indicates host SAS link activity.

Copyright © 2025, Oracle and/or its affiliates.

2

Preparing Oracle Database Appliance for Service

How to prepare the Oracle Database Appliance for servicing.

- Servicing System Components
- Safety Precautions
- Safety Symbols
- Electrostatic Discharge Safety
- FRU Key Identity Properties (KIP) Automated Update
- Required Service Tools
- Preparing the Server for Component Replacement

Servicing System Components

These sections describe the serviceable components of the server.

- Illustrated Parts Breakdown
  Identify major components of Oracle Database Appliance X11 server.
- Customer-Replaceable Units
- Field-Replaceable Units

Illustrated Parts Breakdown

Identify major components of Oracle Database Appliance X11 server.

The following figure identifies Oracle Dababase Appliance X11 server major components.

Copyright © 2025, Oracle and/or its affiliates.

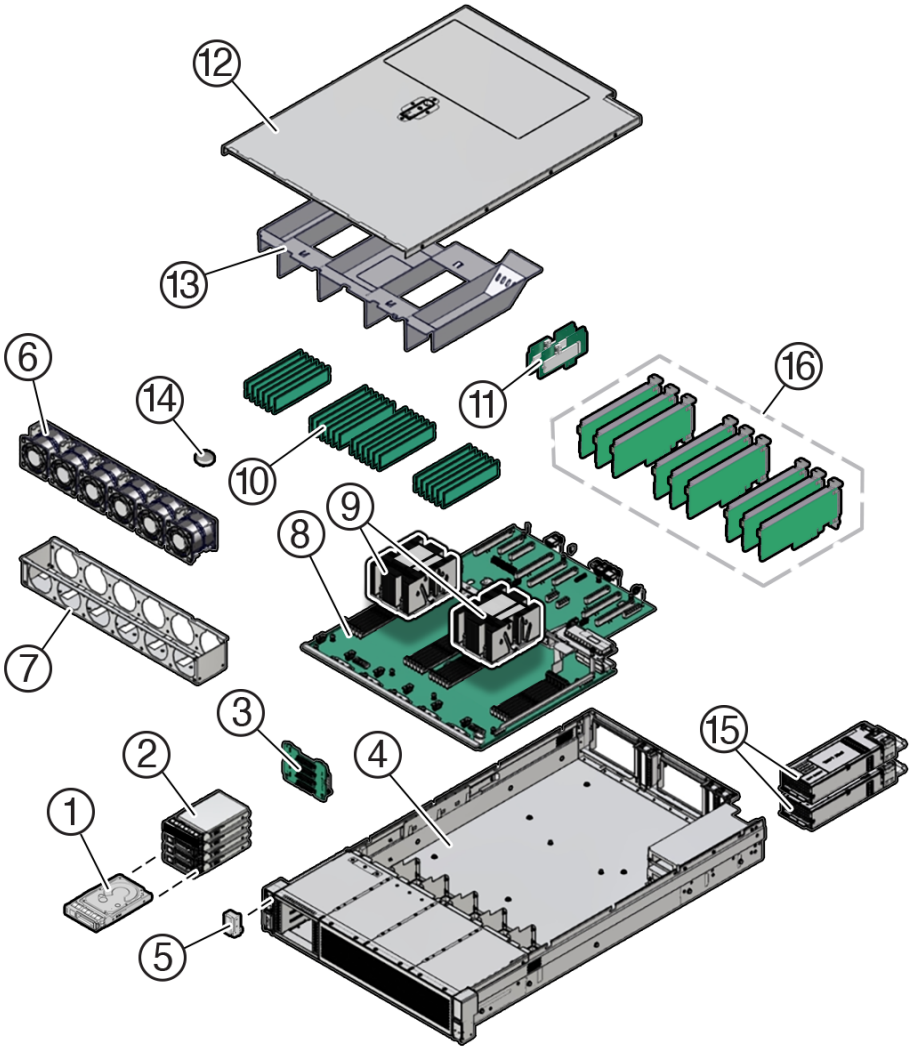

Callout	Description
1	2.5-inch NVMe SSD (up to two supported with the Oracle Database Appliance X11-S, or up to four with the Oracle Database Appliance X11-L)
2	Storage drive bay cage
3	4-Drive backplane
4	System chassis
5	Front LED indicator module
6	Six fan modules (FM0-5)
7	Fan tray
8	Motherboard assembly
9	Processors (P0, P1) and heatsinks (Single-processor systems contain only a single processor in socket P0; socket P1 contains a cap to protect processor socket pins.)
10	24 DIMMs (Twelve DIMMs are supported in single-processor systems and the DIMMs must be installed in P0 DIMM sockets.)
11	Internal M.2 SSD memory with two internal M.2 Risers
12	Top cover

Copyright © 2025, Oracle and/or its affiliates.

Callout	Description
13	Air baffle
14	System RTC battery
15	Two power supplies (PS0, PS1)
16	(Optional) Nine half-height half-length PCIe cards PCIe slots 1 through 4 are nonfunctional in single-processor systems.

Customer-Replaceable Units

The following table lists the customer-replaceable units (CRUs) in the server, describes whether they can be serviced hot (with appliance power on) or cold (with appliance power off) and directs you to the replacement instructions.

CRU (Service Level)	Description	Replacement Instructions
Server battery (Cold service)	Lithium coin-cell battery that powers the CMOS BIOS and real-time clock.	Servicing the Battery
Server DIMMs (Cold service)	Add or replace memory modules in the system.	Servicing the DIMMs
Server storage drives (Hot service)	Storage drive configurations can be comprised of both hard disk drives (HDDs), solid state disk drives (SSDs), or NVMe drives.	Servicing Server Storage Drives
Server internal M.2 flash SSDs (Cold service)	Supports up to two internal M.2 flash SSDs.	Servicing the Internal M.2 Flash SSDs
Server fan modules (Hot service)	Four fan modules for cooling the server components.	Servicing Fan Modules
Server PCIe cards (Cold service)	Optional add-on cards that can expand the functionality of the server.	Servicing PCIe Cards
Server power supply units (Hot service)	Two fully redundant AC-powered power supplies.	Servicing Power Supplies
Storage Shelf components (Hot service)	Storage shelf SSDs, power supplies and IO modules.	Oracle Database Appliance X11-HA Storage Shelf Hot Pluggable Components

Field-Replaceable Units

The following table lists the field-replaceable units (FRUs) in the server and directs you to the replacement instructions.

> **Note**
>
> Only authorized Oracle Service personnel can service FRU components.

Copyright © 2025, Oracle and/or its affiliates.

FRU (Service Level)	Description	Replacement Instructions
Processor and heatsink (Cold service)	Processor that carries out the instructions of the system.	Servicing Processors
Fan tray (Cold service)	Houses the fan modules.	Servicing the Fan Tray
Disk backplane (Cold service)	Provides power and communications connectors for storage drives.	Servicing the Disk Backplane
Front LED indicator module (Cold service)	Contains the push-button circuitry and LEDs that are displayed on the front panel.	Servicing the Front LED Indicator Module
PCIe slot Flyover cable (Cold service)	Supports PCIe slots 6 and 7 in the system.	Servicing the PCIe Slot Flyover Cable (FRU)
Motherboard assembly (Cold service)	Provides connectors for the DIMMs, processors, PCIe risers, and other components.	Servicing the Motherboard Assembly

Safety Precautions

For your protection, observe the following safety precautions when setting up your equipment:

- Follow all standard cautions, warnings, and instructions marked on the equipment and described in the *Oracle Server Safety and Compliance Guide* and *Important Safety Information for Oracle's Hardware Systems*.
- Ensure that the voltage and frequency of your power source match the voltage and frequency that appear on the equipment electrical rating label.
- Follow the electrostatic discharge safety practices as described in Electrostatic Discharge Safety.
- Disconnect both power supply cords (if necessary) before servicing components.

> **Note**
>
> Power cords must be disconnected when servicing components that require cold service.

Safety Symbols

The following symbols might appear in this document. Note their meanings.

> **Caution**
>
> **Risk of personal injury or equipment damage.** To avoid personal injury or equipment damage, follow the instructions.

> **Caution**
>
> **Hot surface.** Avoid contact. Surfaces are hot and might cause personal injury if touched.

Copyright © 2025, Oracle and/or its affiliates.

> ⚠ **Caution**
>
> **Hazardous voltages are present.** To reduce the risk of electric shock and danger to personal health, follow the instructions.

Electrostatic Discharge Safety

Devices that are sensitive to electrostatic discharge (ESD), such as the motherboard, PCIe cards, drives, processors, and memory DIMMs require special handling.

> ⚠ **Caution**
>
> The boards and drives contain electronic components that are extremely sensitive to static electricity. Ordinary amounts of static electricity from clothing or the work environment can destroy components. Do not touch the components along their connector edges.

Do the following when handling ESD-sensitive components:

- Use an antistatic wrist strap.

  Wear an antistatic wrist strap when handling components such as drive assemblies, boards, or cards. When servicing or removing server components, disconnect the power cords from the server. Attach an antistatic strap to your wrist and to a metal area on the chassis. Following this practice equalizes the electrical potentials between you and the server.

  > ⓘ **Note**
  >
  > An antistatic wrist strap is not included in the Accessory Kit for the server. However, antistatic wrist straps are included with optional components.

- Use an antistatic mat.

  Place ESD-sensitive components such as the motherboard, DIMMS (memory modules), and other printed circuit board (PCB) cards on an antistatic mat. The following items can be used as an antistatic mat:

  – Antistatic bag used to wrap an Oracle replacement part
  – Oracle ESD mat (orderable item)
  – Disposable ESD mat (shipped with some replacement parts or optional system components)

FRU Key Identity Properties (KIP) Automated Update

Oracle ILOM includes a key identity properties (KIP) auto-update feature that ensures product information that is used for service entitlement and warranty coverage is accurately maintained by the server at all times, including during hardware replacement activities.

The KIP includes the server product name, product part number (PPN), and product serial number (PSN). The KIP is stored in the FRUID (field-replaceable unit identifiers) container of the three server FRUs that are designated quorum members.

Copyright © 2025, Oracle and/or its affiliates.

The quorum members include:

- Disk backplane (DBP), designated as a primary quorum member.
- Motherboard (MB), designated as a backup quorum member.
- Power supply (PS), designated as a backup quorum member.

When a server FRU that contains the KIP is removed and a replacement component is installed, the KIP of the replacement component is programmed by Oracle ILOM to contain the same KIP as the other two components.

> **Note**
>
> Only one of the quorum members can be replaced at a time. Automated updates can be completed only when two of the three quorum members contain matching key identity properties.

Required Service Tools

The server can be serviced with the following tools:

- Antistatic wrist strap
- Antistatic mat(s)
- No. 2 Phillips screwdriver
- Torx (6 lobe) T10, T15, T20, and T25 drivers
- Torque driver 12 in-lbf with T20 Torx bit (processor and heatsink installation)
- Small flat blade screwdriver (motherboard light pipe removal)

Preparing the Server for Component Replacement

> **Note**
>
> When you are replace the storage drives or power supplies, not all of the procedures in this section are necessary. For more information, see the replacement procedures for those components.

Before you can remove and install components that are inside the server, you must perform the procedures in some or all of the following sections.

- Powering Down the Server
- Disconnect Cables From the Server
- Stabilize the Rack
- Extend the Server to the Maintenance Position
- Remove the Cable Management Arm
- Remove the Server From the Rack
- Take Antistatic Measures

Copyright © 2025, Oracle and/or its affiliates.

- Remove the Server Top Cover
- Remove the Air Baffle

Powering Down the Server

Gracefully shut down the server host to prevent data from being corrupted. Performing a graceful shutdown ensures that the system is ready for restart. If the server is not responding, or you must shut down the server quickly, perform an immediate shutdown.

> **Note**
>
> Some server components, such as storage drives, power supplies, fan modules, and M.2 flash SSDs are hot-pluggable. Components that are hot-pluggable do not require the server to be powered down when performing service procedures.

Determine how you want to power down the server by reviewing the following options.

- Power Down the Server Gracefully Using Oracle ILOM CLI
- Power Down the Server Gracefully Using Oracle ILOM Web Interface
- Power Down the Server Gracefully Using the On/Standby Button
- Power Down the Server for Immediate Shutdown Using Oracle ILOM CLI
- Power Down the Server for Immediate Shutdown Using Oracle ILOM Web Interface
- Power Down the Server for Immediate Shutdown Using the On/Standby Button

Power Down the Server Gracefully Using Oracle ILOM CLI

Performing a graceful shutdown ensures that all of your data is saved and the system is ready for restart.

1. Log in to the server as superuser or equivalent.
2. Notify affected users that the server will be powered down.
3. Save any open files, and quit all running applications.

   Refer to your application documentation for specific information about these processes.
4. Log in to the Oracle ILOM command-line interface (CLI) using an Administrator account.

   Refer to Log In to Oracle ILOM.

   Depending on the nature of the problem, you might want to view the system status or the log files or run diagnostics before you shut down the system. Refer to Oracle ILOM Documentation.
5. At the Oracle ILOM prompt, shut down the operating system using the `stop` command:

   ```
   -> stop /System
   ```


Copyright © 2025, Oracle and/or its affiliates.

> **Note**
>
> The `stop /System` command does not guarantee a system shutdown. This command is only a request to the host operating system (OS) to perform a system shutdown. If the system does not shutdown, you can force a shutdown, see Power Down the Server for Immediate Shutdown Using Oracle ILOM CLI.

The host server performs an orderly power shutdown to Standby power mode, and the System OK LED on the front panel begins blinking.

6. Disconnect the power and cables from the server.

   See Disconnect Cables From the Server.

> **Caution**
>
> When you power down the server using Oracle ILOM, the server enters Standby power mode. Power is still directed to the service processor remote management subsystem and power supply fans. To completely power off the server, you must disconnect the power cords from the power supplies.

Power Down the Server Gracefully Using Oracle ILOM Web Interface

Performing a graceful shutdown ensures that all of your data is saved and the system is ready for restart.

1. Log in to the server as superuser or equivalent.
2. Notify affected users that the server will be powered down.
3. Save any open files, and quit all running applications.

   Refer to your application documentation for specific information about these processes.
4. Log in to the Oracle ILOM web interface using an Administrator account.

   Refer to Log In to Oracle ILOM.

   Depending on the nature of the problem, you might want to view the system status or the log files or run diagnostics before you shut down the system. Refer to Oracle ILOM Documentation.
5. In the left pane, click Host Management → Power Control, and click Graceful Shutdown and Power Off from the Select Action list.
6. Click Save, and then click OK.

   The host server performs an orderly power shutdown to Standby power mode, and the System OK LED on the front panel begins blinking.
7. Disconnect the power cords and data cables from the server.

   See Disconnect Cables From the Server.

Copyright © 2025, Oracle and/or its affiliates.

> **Caution**
>
> When you power down the server using Oracle ILOM, the server enters Standby power mode. Power is still directed to the service processor and power supply fans. To completely power off the server, you must disconnect the power cords from the power supplies.

Power Down the Server Gracefully Using the On/Standby Button

Power down the server using the On/Standby button. Performing a graceful shutdown ensures that all of your data is saved and the system is ready for restart.

1. Press and quickly release the On/Standby button on the front panel.

   This action causes ACPI-enabled operating systems to perform an orderly shutdown of the operating system. Servers not running ACPI-enabled operating systems shut down to Standby power mode immediately.

   When main power is off, the System OK LED on the front panel begins blinking, indicating that the server is in Standby power mode.

2. Disconnect the power cords and data cables from the server.

   See Disconnect Cables From the Server.

> **Caution**
>
> When you power down the server using the On/Standby button, the server enters Standby power mode. Power is still directed to the service processor and power supply fans. To completely power off the server, you must disconnect the power cords from the power supplies.

Power Down the Server for Immediate Shutdown Using Oracle ILOM CLI

> **Caution**
>
> An immediate power-off might corrupt system data, therefore, use this procedure to power down the server only after attempting the graceful power down procedure.

1. Log in to the Oracle ILOM command-line interface (CLI) using an Administrator account.

   Refer to Log In to Oracle ILOM.

   Oracle ILOM displays the default command prompt (`->`), indicating that you have successfully logged in to Oracle ILOM.

2. At the CLI prompt, type the following command:

   ```
   -> stop -f /System
   ```

   The server powers down immediately to Standby power mode.

3. Disconnect the power and data cables from the server.

   See Disconnect Cables From the Server.

Copyright © 2025, Oracle and/or its affiliates.

> ⚠ **Caution**
>
> When you power down the server using Oracle ILOM, the server enters Standby power mode. Power is still directed to the service processor and power supply fans. To completely power off the server, you must disconnect the power cords from the power supplies.

Power Down the Server for Immediate Shutdown Using Oracle ILOM Web Interface

> ⚠ **Caution**
>
> An immediate power-off might corrupt system data, therefore, use this procedure to power down the server only after attempting the graceful power down procedure.

1. Log in to the Oracle ILOM web interface using an Administrator account.

   Refer to Log In to Oracle ILOM.

2. In the left pane, click Host Management → Power Control, and click Immediate Power Off in the Select Action list.

3. Click Save, and then click OK.

   The server powers down immediately to Standby power mode.

4. Disconnect the power and data cables from the server.

   See Disconnect Cables From the Server.

> ⚠ **Caution**
>
> When you power down the server using Oracle ILOM, the server enters Standby power mode. Power is still directed to the service processor and power supply fans. To completely power off the server, you must disconnect the power cords from the power supplies.

Power Down the Server for Immediate Shutdown Using the On/Standby Button

> ⚠ **Caution**
>
> An immediate power-off might corrupt system data, therefore, use this procedure to power down the server only after attempting the graceful power down procedure.

1. Press and hold the On/Standby button for four seconds to force the Main power off and to enter Standby power mode.

   When the Main power is off, the System OK LED on the front panel begins blinking, indicating that the server is in Standby power mode.

2. Disconnect the power cords and data cables from the server.

   See Disconnect Cables From the Server.

Copyright © 2025, Oracle and/or its affiliates.

> **Caution**
>
> When you power down the server using the On/Standby button, the server enters Standby power mode. Power is still directed to the service processor and power supply fans. To completely power off the server, you must disconnect the power cords from the power supplies.

Disconnect Cables From the Server

> **Caution**
>
> The system supplies Standby power to the circuit boards even when the system is powered off.

1. Label all cables connected to the server.
2. Power down the server.

   See Powering Down the Server.
3. Disconnect the power cords from the rear of the server.
4. Disconnect all data cables from the rear of the server.
5. If your rackmount kit includes a cable management device, remove the cables from it.
6. Depending on the components that you are servicing, either extend the server to the maintenance position, or remove the server from the rack.

Stabilize the Rack

> **Caution**
>
> To reduce the risk of personal injury, stabilize the rack cabinet, and extend the anti-tilt bar before you install the server.

Refer to your rack documentation for detailed instructions for the following steps.

1. Open and remove the front and back doors from the rack cabinet, only if they impinge on the mounting bay.
2. To prevent the rack cabinet from tipping during the installation, fully extend the rack cabinet anti-tilt bar, which is located at the bottom front of the rack cabinet.
3. If the rack includes leveling feet beneath the rack cabinet to prevent the rack from rolling, extend these leveling feet fully downward and lock to the floor.

> **Caution**
>
> When moving the rack cabinet to a new location, verify that the leveling feet are up before moving the rack.

Copyright © 2025, Oracle and/or its affiliates.

Related Rack Documentation

- Oracle Rack Cabinet 1242 Documentation
- Oracle Sun Rack II 1242 Documentation
- Oracle Sun Rack II 1042 Documentation

Extend the Server to the Maintenance Position

The following components can be serviced with the server in the maintenance position:

- Fan modules
- DDR5 DIMMs
- Processors
- M.2 Flash drives and risers
- System battery
- Motherboard
- PCIe cards and cables
- Disk backplane
- Front indicator module

If the server is installed in a rack with extendable slide-rails, use this procedure to extend the server to the maintenance position.

1. To prevent the rack from tipping forward when the server is extended, extend all rack anti-tilt mechanisms.

   See Stabilize the Rack.

2. Verify that no cables will be damaged or will interfere when the server is extended.

   Although the cable management arm (CMA) that is supplied with the server is hinged to accommodate extending the server, ensure that all cables and cords are capable of extending.

3. From the front of the server, open and hold the left and right release latch covers in the open position.

   When in an open position, the release latch covers engage the slide-rail release latches [1].

   > ⚠ **Caution**
   >
   > Deploy any rack anti-tilt mechanism before releasing the slide-rail release latches.

Copyright © 2025, Oracle and/or its affiliates.

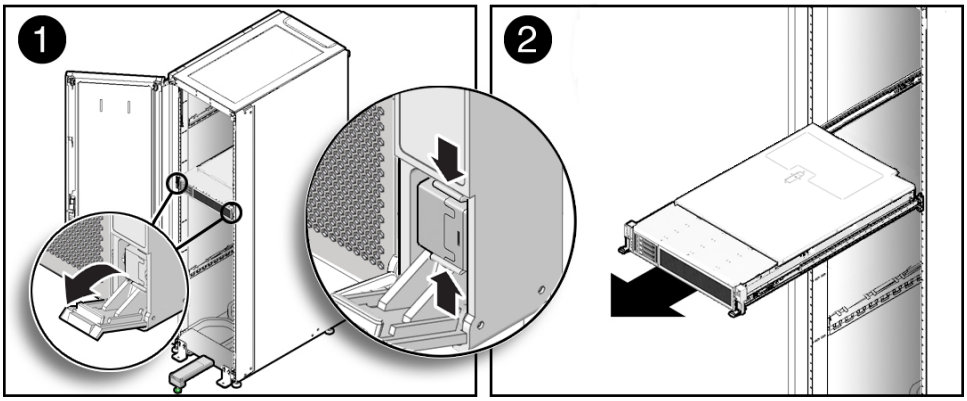

4. While the release latch covers are in the open position, slowly pull the server forward until the slide-rails latch into a locked position [2].

   The server is now in the extended maintenance position.

Remove the Cable Management Arm

Follow this procedure to remove the cable management arm (CMA). You might need to remove the CMA to service power supplies or cables connected to the back of the system.

Before you begin this procedure, refer to the illustration provided in the procedure Install the Cable Management Arm (Optional) to identify CMA connectors A, B, C, and D. Disconnect the CMA connectors in the reverse order in which you installed them, that is, disconnect connector D first, followed by C, B, and A.

Throughout this procedure, after you disconnect any of the CMA four connectors, do not allow the CMA to hang under its own weight.

> **Note**
>
> References to “left” or “right” in this procedure assume that you are facing the back of the equipment rack.

1. To prevent the rack from tipping forward when the server is extended, ensure that the rack anti-tilt bar is extended.

   > **Caution**
   >
   > To reduce the risk of personal injury, stabilize the rack cabinet and extend the anti-tilt bar before extending the server from the rack.

   For instructions to stabilize the rack, see Stabilize the Rack.

2. To make it easier to remove the CMA, extend the server approximately 13 cm (5 inches) out of the front of the rack.
3. To remove the cables from the CMA:
   a. Disconnect all cables from the back of the server.

Copyright © 2025, Oracle and/or its affiliates.

b. If applicable, remove any additional Velcro straps that were installed to bundle the cables.

c. Unwrap the six Velcro straps that are securing the cables.

d. Open the three cable covers to the fully opened position.

e. Remove the cables from the CMA and set them aside.

4. To disconnect connector D:

a. Press the green release tab (callout 1) on the slide-rail latching bracket toward the left and slide the connector D out of the left slide-rail [1 and 2].

When you slide connector D out of the left slide-rail, the slide-rail latching bracket portion of the connector remains in place. You disconnect connector D in the next step.

> **Note**
>
> After you disconnect connector D, do not allow the CMA to hang under its own weight. Throughout the remainder of this procedure, the CMA must be supported until all the remaining connectors are disconnected and the CMA can be placed on a flat surface.

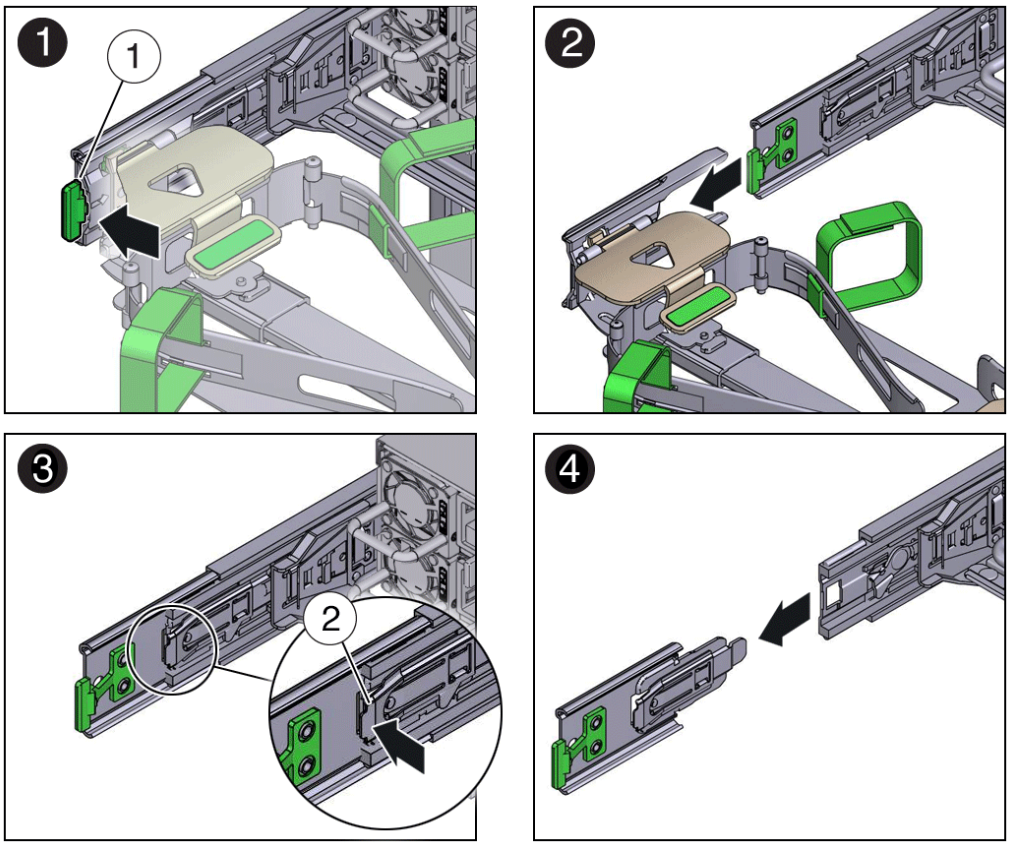

Call Out	Description
1	Connector D release tab (green)

Copyright © 2025, Oracle and/or its affiliates.

Call Out	Description
2	Slide-rail latching bracket release tab (labeled PUSH)

b. Use your right hand to support the CMA and use your left thumb to push in (toward the left) on the slide-rail latching bracket release tab labeled PUSH (callout 2), and pull the latching bracket out of the left slide-rail and put it aside [3 and 4].

5. To disconnect connector C:

   a. Place your left arm under the CMA to support it.

   b. Use your right thumb to push in (toward the right) on the connector C release tab labeled PUSH (callout 1), and pull connector C out of the right slide-rail [1 and 2].

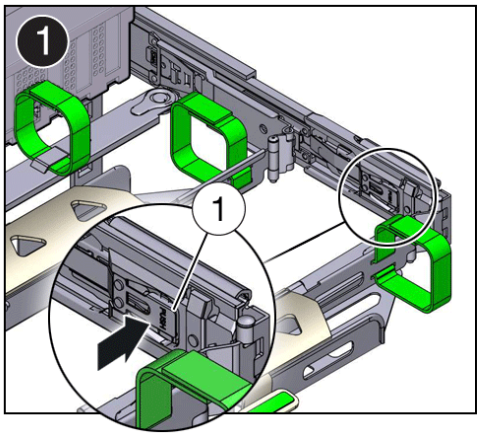

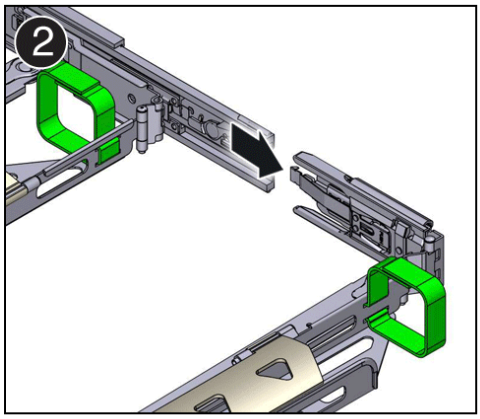

Call Out	Description
1	Connector C release tab (labeled PUSH)

6. To disconnect connector B:

   a. Place your right arm under the CMA to support it and grasp the back end of connector B with your right hand.

   b. Use your left thumb to pull the connector B release lever to the left, away from the right slide-rail (callout 1), and use your right hand to pull the connector out of the slide-rail [1 and 2].

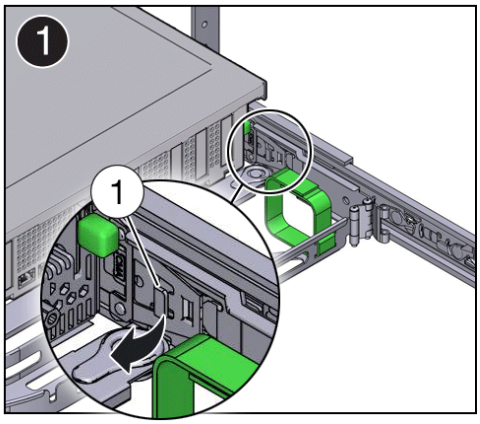

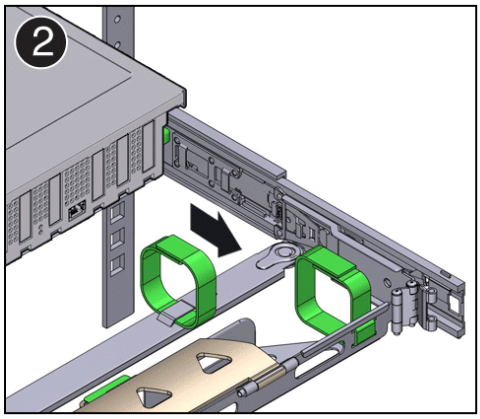

Copyright © 2025, Oracle and/or its affiliates.

Call Out	Description
1	Connector B release lever

7. To disconnect connector A:
   a. Place your left arm under the CMA to support it and grasp the back end of connector A with your left hand.
   b. Use your right thumb to pull the connector A release lever to the right, away from the left slide-rail (callout 1), and use your left hand to pull the connector out of the slide-rail [1 and 2].

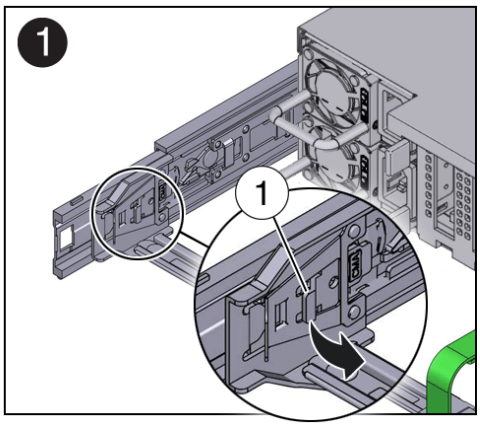

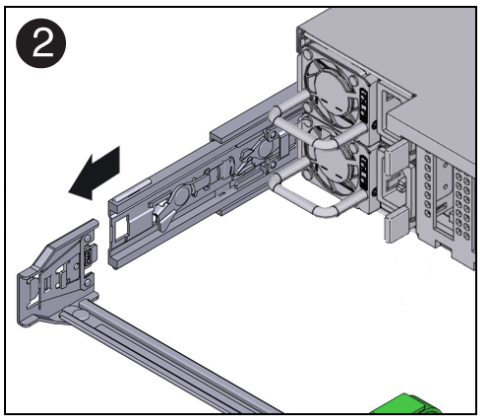

Call Out	Description
1	Connector A release lever

8. Remove the CMA from the rack and place it on a flat surface.
9. Go to the front of the server and push it back into the rack.

Remove the Server From the Rack

This section describes how to remove the server from the rack. For most service actions you won't need to do this.

> ⚠ **Caution**
>
> The server weighs approximately 76 lbs (34 kg). A mechanical lift or two people are required to remove the server from the rack and carry the chassis.
> Always load equipment into a rack from the bottom up so that the rack does not become top-heavy and tip over. Extend the rack anti-tilt bar to prevent the rack from tipping during equipment installation.

1. Disconnect all the cables and power cords from the server.
2. Remove the cable management arm (CMA).

   See Remove the Cable Management Arm.
3. Extend the server to the maintenance position.

   See Extend the Server to the Maintenance Position.

Copyright © 2025, Oracle and/or its affiliates.

4. From the front of the server on both sides, pull the gray slide-rail release tabs toward the front of the server, and pull the server out of the rack until it is free of the rack rails [1 and 2].

   Use a mechanical lift or two people to remove the chassis from the rack and transport it.

   A slide-rail release tab is located on each slide-rail.

   > **Note**
   >
   > To pull the gray slide-rail release tab, place your finger in the center of the tab, not on the end, and apply pressure as you pull the tab toward the front of the server.

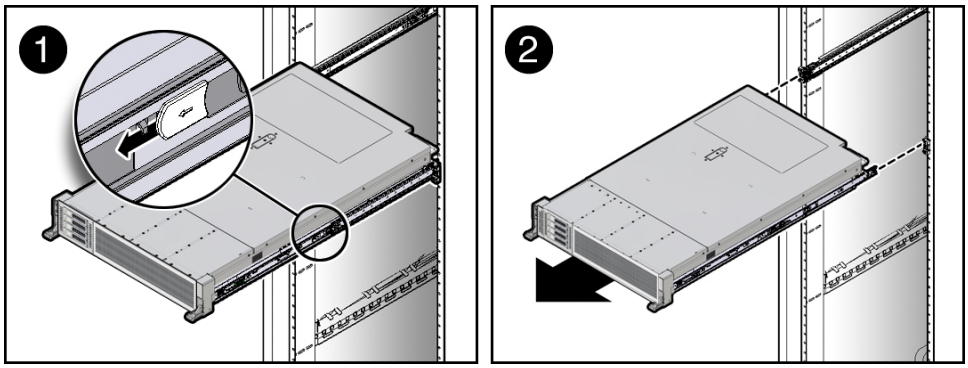

5. Set the server on a sturdy, ESD safe work surface.

Take Antistatic Measures

1. Prepare an antistatic surface on which to set parts during removal and installation.

   Place electrostatic discharge ESD-sensitive components such as the printed circuit boards on an antistatic mat. You can use the following items as an antistatic mat:

   - Antistatic bag used to wrap a replacement part
   - Oracle ESD mat (orderable item)
   - Disposable ESD mat (shipped with some replacement parts or optional system components)

2. Attach an antistatic wrist strap.

   When servicing or removing server components, attach an antistatic strap to your wrist and then to a metal area on the chassis. Then perform procedures for servicing the server.

   > **Note**
   >
   > An antistatic wrist strap is not included in the Accessory Kit for the server. However, antistatic wrist straps might be included with options and components.

Remove the Server Top Cover

Remove the top cover to service components inside the server.

Copyright © 2025, Oracle and/or its affiliates.

1. To service non-hot pluggable components, ensure that AC power cords are disconnected from the server power supplies.
2. If the release button latch is in the locked position, use a Torx T15 screwdriver to turn the release button latch clockwise to the unlocked position.

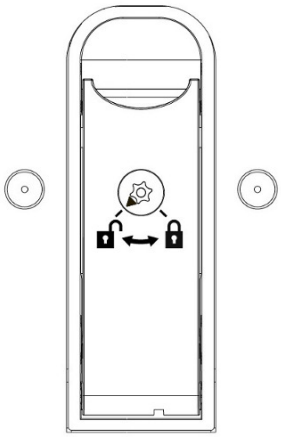

3. Unlatch the top cover [1].

   Lift up on the release button on top of the server cover. Lifting the release button slides the server cover toward the rear of the chassis for easy removal.

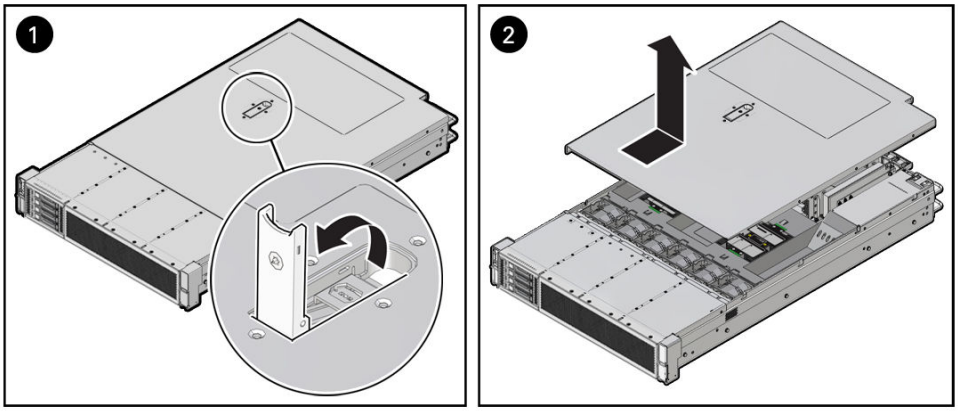

4. Lift up and remove the top cover [2].

Remove the Air Baffle

1. Prepare the server for service.
   a. Power off the server.

      See Powering Down the Server.
   b. Disconnect the power cords from the power supplies.

      See Disconnect Cables From the Server.
   c. Extend the server into the maintenance position.

      See Extend the Server to the Maintenance Position.
   d. Attach an antistatic wrist strap to your wrist and then to a metal area on the chassis.

Copyright © 2025, Oracle and/or its affiliates.

See Take Antistatic Measures.

e. Remove the server top cover.

See Remove the Server Top Cover.

2. Remove the air baffle by lifting the baffle up and out of the server.

Lift up the air baffle in the rear at a 50 degree angle, and slide slightly rearward to clear the air baffle tabs that prevent the front of the baffle from lifting up.

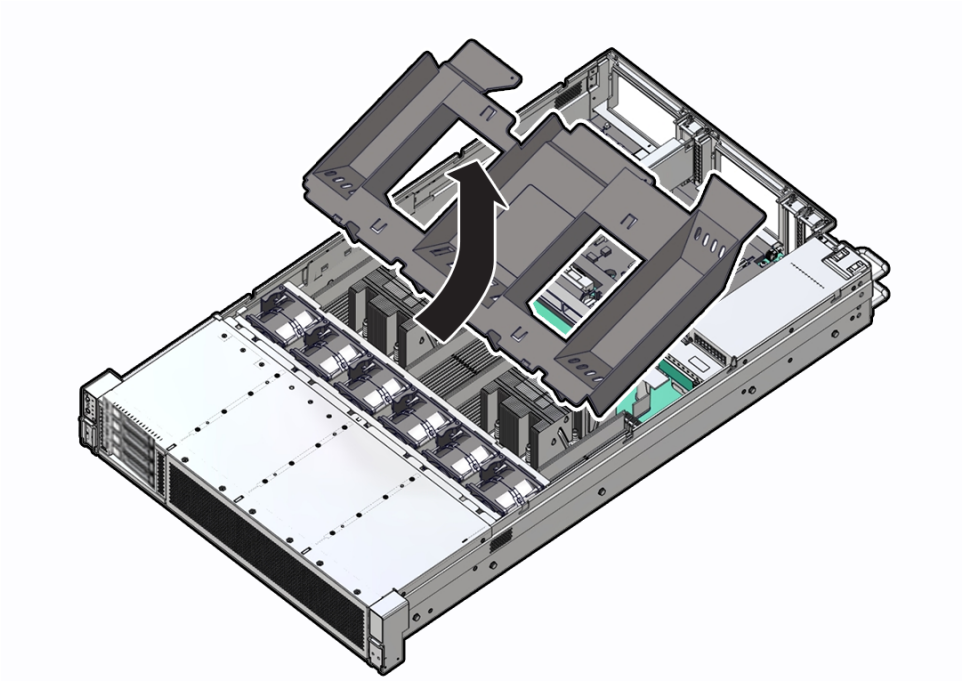

3. Set aside the air baffle.
4. Consider your next step:
   - If you removed the air baffle as part of another procedure, return to that procedure.
   - Otherwise, continue to Install the Air Baffle.

Copyright © 2025, Oracle and/or its affiliates.

3

Servicing CRUs That Do Not Require System Power Off

Perform tasks for servicing hot plug components in the Oracle Database Appliance.

Hot-pluggable components can be replaced with the system powered on.

> **Note**
>
> Hot-pluggable components can also be replaced with the system powered off. If you choose this method, first power off the system as described in Preparing Oracle Database Appliance for Service.

- Oracle Database Appliance X11 Server Hot Pluggable Components
  Provides instructions on how to perform hot plug tasks on an Oracle Database Appliance server.
- Oracle Database Appliance X11-HA Storage Shelf Hot Pluggable Components
  Perform hot plug tasks on an Oracle Database Appliance storage shelf.

Oracle Database Appliance X11 Server Hot Pluggable Components

Provides instructions on how to perform hot plug tasks on an Oracle Database Appliance server.

Replacing hot plug components does not require you to power off the Oracle Database Appliance X11-S/X11-L server or an Oracle Database Appliance X11-HA server node.

> **Note**
>
> In certain storage expansion scenarios (explained in the following procedures), adding optional storage might require that the appliance be powered off.

If you are servicing storage shelf hot plug components, see Oracle Database Appliance Storage Shelf Hot-Pluggable Components.

Hot-pluggable components are those that can be removed and installed while the system is running. These are designated as Customer Replaceable Units (CRUs).

Copyright © 2025, Oracle and/or its affiliates.

> **Note**
>
> After a physical insertion or removal action of a storage component (such as a disk or SAS cable), you should wait before performing the next action to allow the system software to fully process the event. This could take up to 3 minutes to complete.

For instructions on servicing NVMe front-mounted storage devices, see Servicing NVMe Storage Drives. Note that front mounted storage drives are **not** supported in the Oracle Database Appliance X11-HA server nodes.

Caution: An NVMe drive must first be powered off before removal. If you do not power off the NVMe drive before removal you can crash the operating system. Oracle Database Appliance uses special commands to remove or add NVMe storage.

- Servicing NVMe Storage Drives (CRU)
  Perform tasks for servicing front-mounted NVMe drives in an Oracle Database Appliance X11-S/X11-L system. The Oracle Database Appliance X11-HA does not support front-mounted drives in server nodes.
- Servicing Fan Modules (CRU)
  Perform tasks for servicing the fan modules and the fan tray.
- Servicing Power Supply Modules (CRU)
  Perform tasks for servicing system chassis fan modules in an Oracle Database Appliance.

Servicing NVMe Storage Drives (CRU)

Perform tasks for servicing front-mounted NVMe drives in an Oracle Database Appliance X11-S/X11-L system. The Oracle Database Appliance X11-HA does not support front-mounted drives in server nodes.

- Replacing an NVMe Storage Drive
  Replace a front-mounted NVMe drive in an Oracle Database Appliance X11-S/X11-L system.
- Adding NVMe Expansion Storage
  Add NVMe storage to an Oracle Database Appliance X11-L. Note that the Oracle Database Appliance X11-S does not support additional storage.

Replacing an NVMe Storage Drive

Replace a front-mounted NVMe drive in an Oracle Database Appliance X11-S/X11-L system.

Before removing an NVMe drive it must be powered off. After installing an NVMe drive it must be powered on. Failed drives are automatically powered off after 5 minutes.

> **Caution**
>
> If you remove an NVMe drive without first powering it off, you can crash the operating system. Oracle Database Appliance uses special commands to add or remove NVMe storage.

The instructions describe how to replace an NVMe drive using the odaadmcli power on/off commands for an Oracle Database Appliance server.

Copyright © 2025, Oracle and/or its affiliates.

The `odaadmcli` commands listed here must be run as the root user.

1. Identify the NVMe drive to be replaced. Type the following command at the host:

   ```
   # odaadmcli show disk
   ```

   For example, the drive names `pd_00` and `pd_01` are seen by the host as NVMe0 and NVMe1 and correspond to front drive slots 0 and 1, respectively.

2. Unmount and power off the drive to be replaced. Do one of the following:

   a. If you are replacing a failed drive, check to see if its blue ready-to-remove light is lit.

      If a drive has failed, it should power off automatically and light its blue ready-to-remove indicator after 5 minutes.

   b. If the drive being replaced doesn't already have its blue ready-to-remove indicator lit, type the following command from the host to unmount and turn off power to the drive:

      ```
      # odaadmcli power disk off pd_xx
      ```

      Where `pd_xx` is the name of the disk to be replaced as described in step 1.

      Before proceeding to the next step confirm that the blue ready-to-remove indicator on the drive is lit.

3. Push the latch release button on the front of the drive to open the drive latch [1], grasp the latch, and pull the drive out of the drive slot [2] as shown in the following figure.

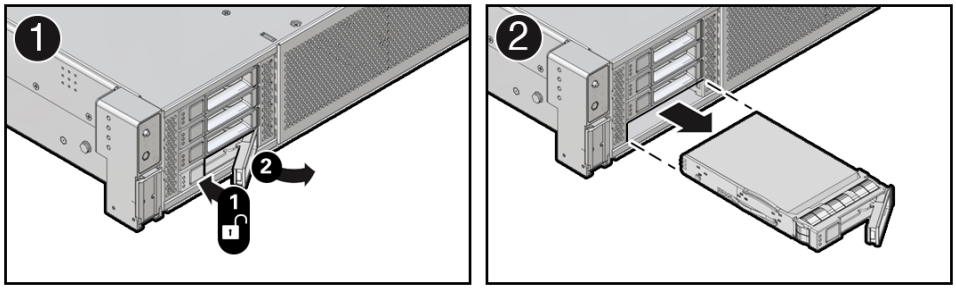

4. Align the replacement drive with the drive slot.

   The drive is physically addressed according to the slot in which it is installed. It is important to install a replacement drive in the same slot as the drive that was removed.

5. With the drive latch in the open position, slide the drive into the slot until the drive is fully seated [1] and then close the drive latch to lock the drive in place [2] as shown in the following figure.

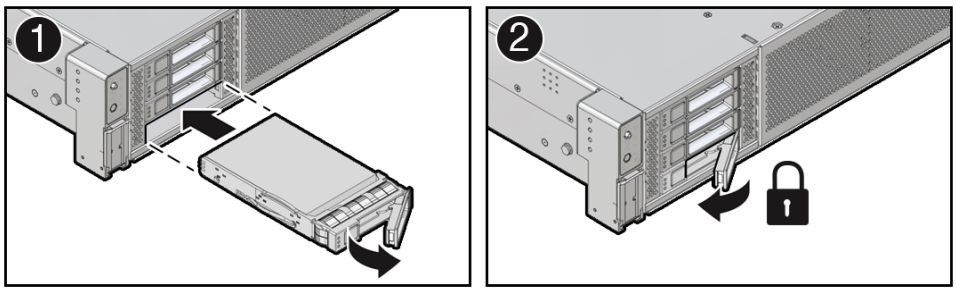

6. Power on and remount the replacement drive. Type the following command from the host:

Copyright © 2025, Oracle and/or its affiliates.

```
# odaadmcli power disk on pd_xx
```

Where `pd_xx` is the name of the disk being replaced as described in step 1.

It can take a few minutes for the power-on operation to complete. Once complete, the drive's green OK indicator will light.

7. To check the status of the replacement disk, type the following command from the host:

```
# odaadmcli show disk
```

For additional information, refer to the Oracle Database Appliance *Deployment and User's Guide*.

Adding NVMe Expansion Storage

Add NVMe storage to an Oracle Database Appliance X11-L. Note that the Oracle Database Appliance X11-S does not support additional storage.

- The **Oracle Database Appliance X11-L** supports two expansion slots for NVMe drives. These are slots labeled 2 through 3 as seen from the front of the system. Storage drives can be added in sets of two. For information about supported optional storage drives, refer to the *Owner's Guide*.

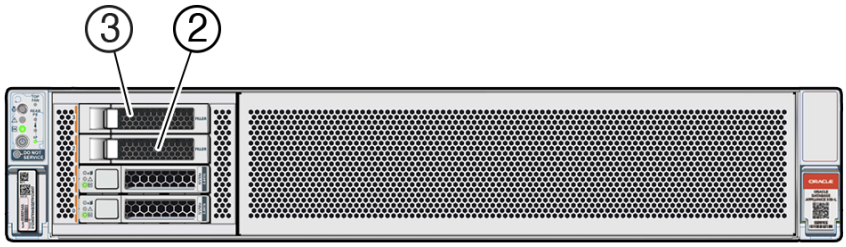

- When expanding storage, populate slots starting with the lowest numbered available slot (for example, slot 2 as seen on the front panel).
- The drive power-up and storage expansion `odaadmcli` commands listed here should only be run after all new disk drives have been physically installed. Once you expand storage, you cannot revert to a previous storage configuration (for example, the default installation with only two NVMe drives).

1. Remove the drive filler panel of an unpopulated slot by using your finger to pry open the panel release latch and pulling the filler out of the drive slot.

> **Note**
>
> Replace filler panels with drives one at a time to ensure proper system cooling.

2. Open the latch of the new drive by pressing the release button on the drive.

> **Caution**
>
> Do not over-rotate the latch outwards when opening. Doing so can damage it.

Copyright © 2025, Oracle and/or its affiliates.

3. Insert the new drive by sliding the drive into the slot until the drive is fully seated. Then close the drive latch to lock the drive in place.
4. Repeat steps 1 - 3 for each new drive.

   For the **Oracle Database Appliance X11-L**, the name for these drives to the host will be `pd_02` and `pd_03`.
5. Power on each of the new drives by entering the appropriate commands from the host using the following command format:

   ```
   # odaadmcli power disk on pd_##
   ```

   Where ## is the number of the drive being powered on (`02` and `03`).

   It can take a few minutes for the power-on operation to complete. Once complete, the green OK indicators will light for the newly installed drives.

   > **Note**
   >
   > Do not attempt to power on and expand storage on one new disk and then power on and expand storage on the next new disk. Before you can expand storage, all the new disks must be powered on with their green OK indicators lit.

6. Expand the system storage to include the new drives. Type the following command from the host:

   ```
   # odaadmcli expand storage -ndisk number_of_disks
   ```

   Where *number_of_disks* is the number of disks being added. The system will then detect and use the new storage.

   For additional information, refer to the Oracle Database Appliance *Deployment and User's Guide*.

Servicing Fan Modules (CRU)

Perform tasks for servicing the fan modules and the fan tray.

Fan modules are located inside the server chassis near the front of the server. They do not require you to power off the server before servicing.

- Remove a Fan Module
- Install a Fan Module

Remove a Fan Module

You do not have to power off the server to service fan modules.

Copyright © 2025, Oracle and/or its affiliates.

> **Caution**
>
> When replacing a fan module, you must complete the entire procedure within 60 seconds (including top cover replacement) to maintain adequate cooling in the system. Otherwise, the system might shutdown due to over-temperature which could potentially damage components. Remove and replace only one fan module at a time. Ensure that you have obtained the replacement fan module and that is it is ready for installation before starting the replacement procedure.

1. Extend the server to the maintenance position.

   See Extend the Server to the Maintenance Position.

2. To access the fan modules, remove the server top cover.

   See Remove the Server Top Cover.

3. Identify the faulty fan module.

   Each fan module has a fan service action required status indicator (LED) that is located next to the module. If the LED is amber, the fan has failed. The front Top Fan LED and the front and back panel Fault-Service Required LEDs are also lit if the system detects a fan module fault. The location of the fan status LED is shown in the following figure.

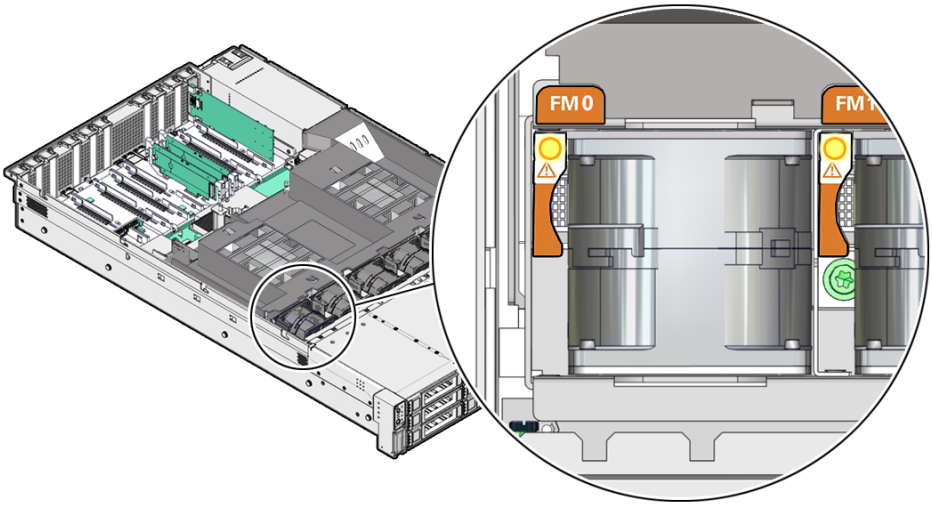

4. Using your forefinger and thumb, lift the fan module straight up and out of the chassis and set it aside on an antistatic mat.

Copyright © 2025, Oracle and/or its affiliates.

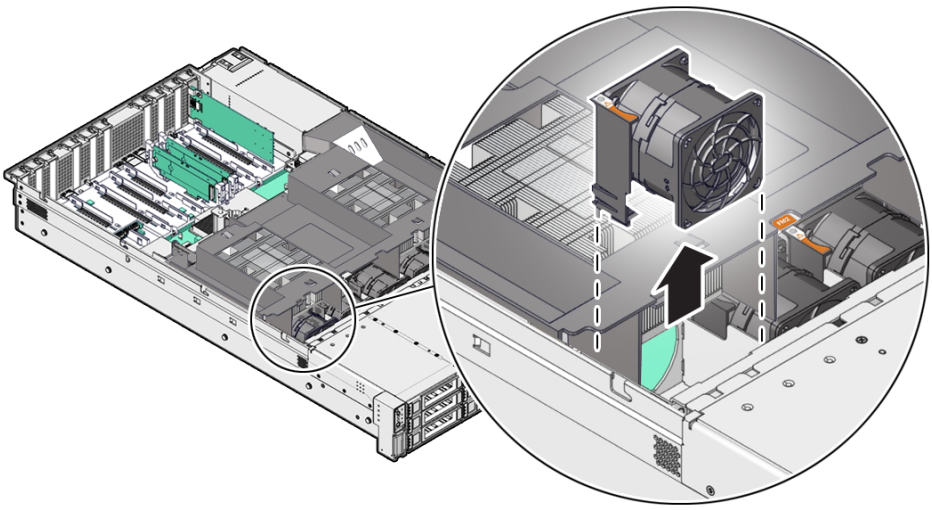

Install a Fan Module

1. Remove the replacement fan module from its packaging, and place it on an antistatic mat.
2. With the server top cover removed, install the replacement fan module into the server.

   The fan modules are keyed to ensure that they are installed in the correct orientation.

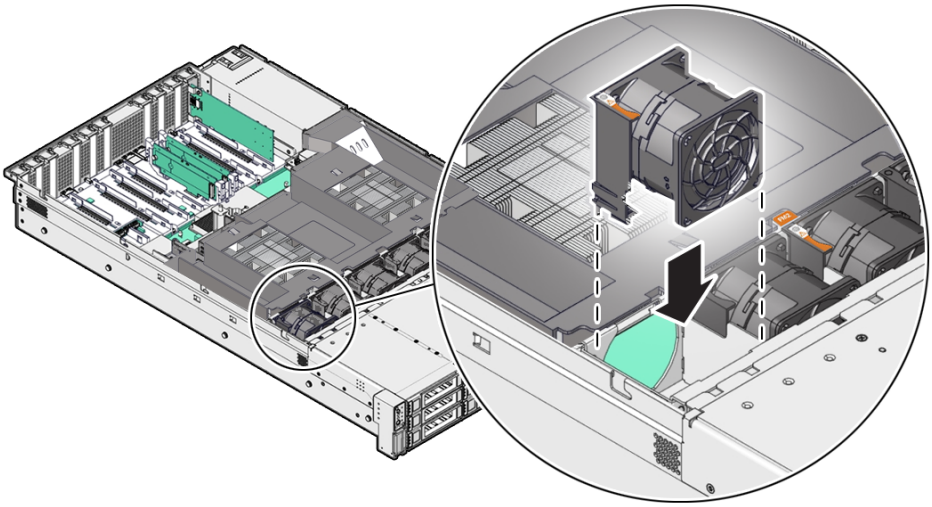

3. Press down on the fan module to fully seat the fan module.
4. Verify that the fan module status indicator (LED) for the replacement fan module is not illuminated.
5. Install the server top cover.

   See Install the Server Top Cover.
6. Verify that the Top Fan Fault LED on the front of the server and the Fault-Service Required LEDs on the front and back of the server are not illuminated.

Servicing Power Supply Modules (CRU)

Perform tasks for servicing system chassis fan modules in an Oracle Database Appliance.

Copyright © 2025, Oracle and/or its affiliates.

Power supplies are are located at the back of the server and do not require you to power off the server before servicing.

The server supports model A271 and A271A 1400 watt power supplies. The system requires high line 200 - 240 volts AC (VAC) line input. The power supply (PS) converts AC power to lower DC voltages used by internal system components. The power supplies are hot-pluggable and provide “1+1” redundancy, allowing the system to suffer the loss of a power supply or an AC line with no loss to system availability.

- Remove a Power Supply
- Install a Power Supply

Remove a Power Supply

1. Prepare the system for power supply removal.

   See Take Antistatic Measures.

2. Identify which power supply requires replacement.

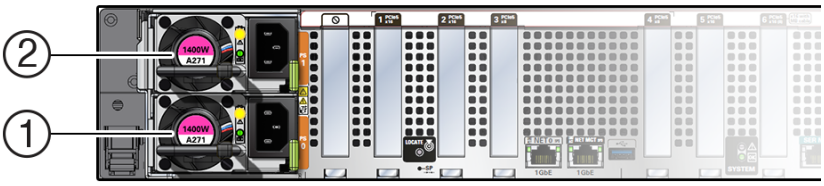

Callout	Description
1	Power supply 0 (PS0)
2	Power supply 1 (PS1)

A lit amber Fault-Service Required LED on a power supply indicates that a failure was detected. You also can log in to Oracle ILOM and use the `show faulty` command to identify a failed power supply.

To list all known faults in the server, launch the Oracle ILOM Fault Management Shell and issue the `fmadm faulty` command. For more information about how to use the Oracle ILOM Fault Management Shell and supported commands, refer to the *Oracle ILOM User's Guide for System Monitoring and Diagnostics* at Oracle ILOM Documentation.

> **Note**
>
> The fans of a failed power supply still might be spinning when the system is powered on. You can remove a power supply while the fans are still spinning.

3. Gain access to the rear of the server where the failed power supply is located.
4. If the cable management arm (CMA) is installed, disconnect both CMA left-side connectors and move the CMA out of the way.

   See Remove the Cable Management Arm for additional CMA information.

Copyright © 2025, Oracle and/or its affiliates.

> **Caution**
>
> When disconnecting the CMA left-side connectors, be sure to use your arm to support the CMA so that it does not hang down under its own weight and stress the right-side connectors. Otherwise, the CMA might be damaged. You must continue to support the CMA until you reconnect both left-side connectors.

5. Disconnect the power cord from the failed power supply.
6. Grasp the power supply handle and push the power supply latch to the left.

   Open the power supply handle if the handle is folded flush. Open the velcro straps if present.

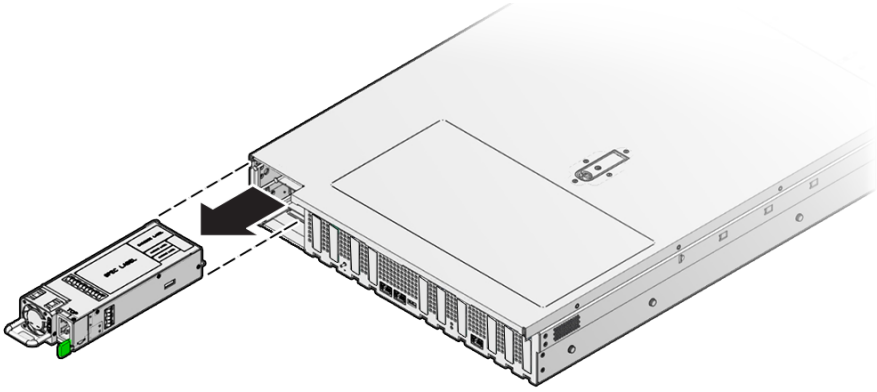

7. Pull the power supply out of the chassis.

> **Caution**
>
> When you remove a power supply, be sure to replace it with another power supply within 60 seconds; otherwise, the server might overheat due to improper airflow.

8. Continue to Install a Power Supply.

Install a Power Supply

> **Caution**
>
> Always replace the failed power supply with the same model of power supply. For this product, note that both the A271 and A271A power supplies are supported and are considered interchangeable.

1. Remove the replacement power supply from its packaging, and place it on an antistatic mat.
2. Align and orient the replacement power supply with the empty power supply slot.
3. Slide the power supply into the slot until it is fully seated.

   You will hear an audible click when the power supply fully seats.

Copyright © 2025, Oracle and/or its affiliates.

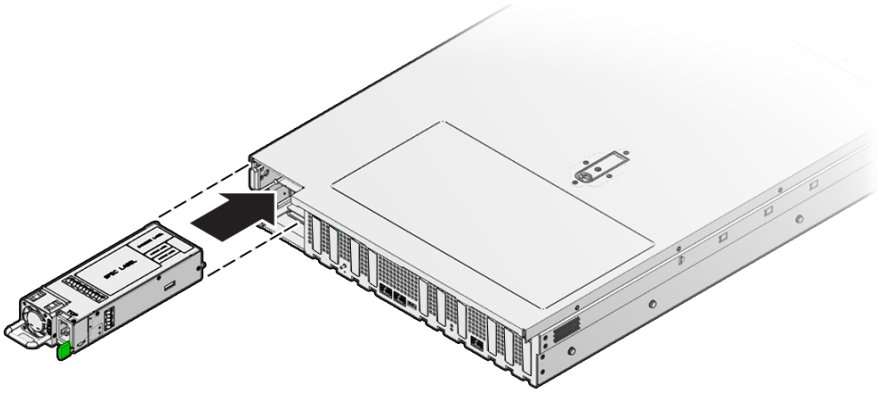

4. Reconnect the power cord to the power supply.
5. Verify that the amber Fault-Service Required LED on the replaced power supply and the Fault-Service Required LEDs are not lit on the front and back panels.

> **Note**
>
> If you are replacing Power Supply 0, you must additionally log into Oracle ILOM and use the `reset /SP` command to reset the service processor to propagate the key identity properties (KIP) data to the new power supply. For more information on resetting the SP, refer to the *Oracle Integrated Lights Out Manager (ILOM) Configuration and Maintenance Guide* at Oracle ILOM Documentation. Power Supply 1 does not contain KIP data, and therefore does not require an SP reset after replacement.

6. If you disconnected the two CMA left-side connectors, reconnect the connectors or straps.

   See Install the Cable Management Arm (Optional).

Oracle Database Appliance X11-HA Storage Shelf Hot Pluggable Components

Perform hot plug tasks on an Oracle Database Appliance storage shelf.

Under most circumstances, Oracle Database Appliance X11-HA storage shelf components can all be replaced while the storage shelf is powered-on and running. Any exceptions will be described in the following procedures.

- Adding Optional Storage Shelf Drives (CRU)
  Add disk storage in an Oracle Database Appliance X11-HA storage shelf.
- Replace a Storage Shelf HDD or SSD (CRU)
  Replace a storage disk in an Oracle Database Appliance storage shelf.
- Replace a Storage Shelf Power Supply (CRU)
  Replace a power supply in an Oracle Database Appliance storage shelf.
- Replace a Storage Shelf I/O Module (CRU)
  Replace an IO module in an Oracle Database Appliance storage shelf.

Copyright © 2025, Oracle and/or its affiliates.

Adding Optional Storage Shelf Drives (CRU)

Add disk storage in an Oracle Database Appliance X11-HA storage shelf.

The **Oracle Database Appliance X11-HA storage shelf** partially-populated base configuration supports storage expansion with either 7.68 TB SSDs (available in six-packs) or 22 TB HDDs (available in an eighteen-pack). Depending on your initial base storage shelf configuration, there can be up to eighteen expansion slots. These slots are labeled 6-23 as seen from the front of the system (callouts 6 through 23 in the following illustration).

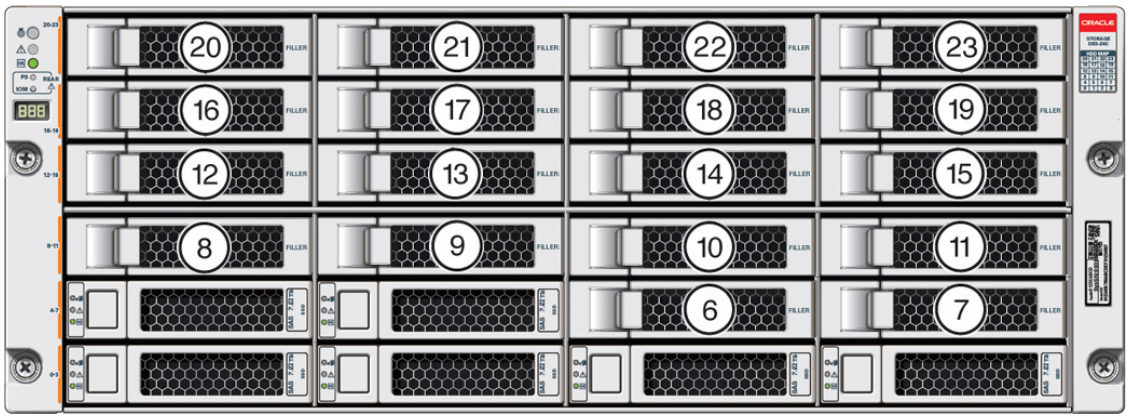

- Upgrade options:
  - **For a high performance shelf**, you can add up to eighteen 7.68 TB SSDs (available in six-packs). You can add storage with the system running and use the appliance CLI software commands to expand the storage configuration.
  - **For a high capacity shelf**, you can add eighteen 22 TB HDDs (available in an eighteen-pack). You must power off the appliance, add storage, then re-image and redeploy the appliance software. This is required to reconfigure the appliance from the default high performance mode to high capacity mode.
- **Expanding the base configuration storage shelf with 7.68 TB SSDs for high performance.** The base configuration has slots 0-5 with 7.68 TB drives for DATA/RECO. Expansion SSDs are available in six-packs and are populated in shelf storage slots from the bottom up to also be used for DATA/RECO, as follows:
  - The first six expansion drives go into slots 6-11.
  - The second six expansion drives go into slots 12-17.
  - The third six expansion drives go into slots 18-23.

  The following illustration shows the expanded drive configuration for 7.68 TB SSDs.

Copyright © 2025, Oracle and/or its affiliates.

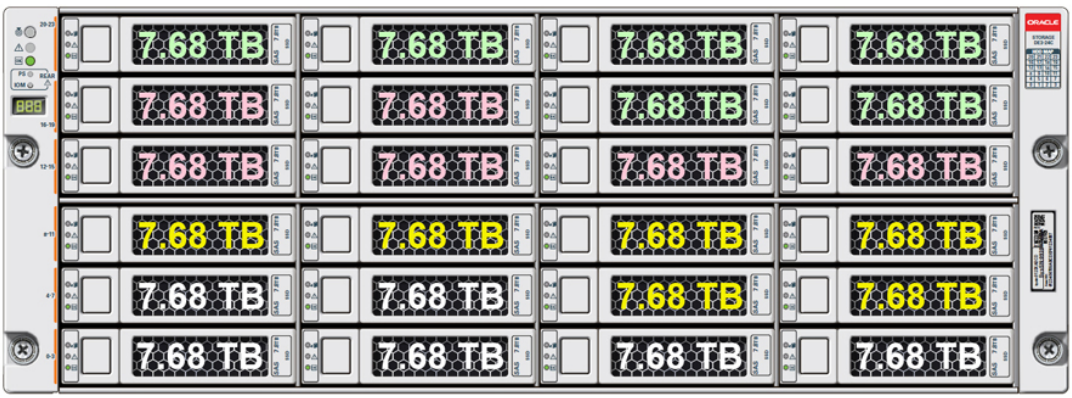

- **Expanding the base configuration storage shelf with 22 TB HDDs for high capacity.** When expanding the storage shelf with HDDs, the base configurations SSDs will be used for FLASH and the HDDs will be used for DATA/RECO. Expansion HDDs are available in an eighteen-pack and populate the empty shelf storage slots (slots 6-23). You must power off the appliance, add storage, then re-image and redeploy the appliance software. This is required to reconfigure the appliance from the default high performance mode to high capacity mode.

  The following illustration shows the expanded drive configuration for 22 TB HDDs.

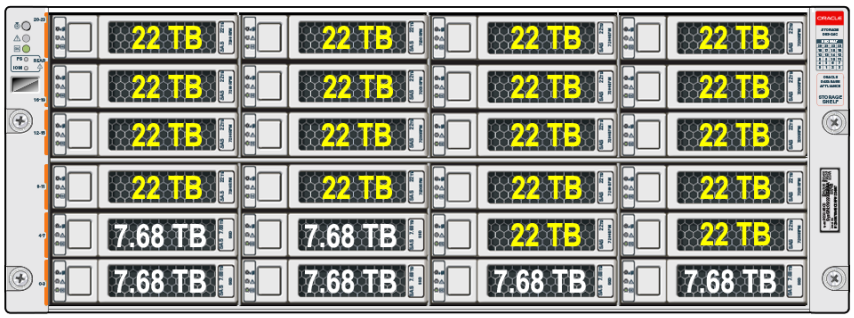

- Once you expand storage to support additional disks, you cannot revert to the base configuration (no drives in slots 6-23).
- If you plan on adding another storage shelf, it must be populated identically to your first storage shelf.
- The `odaadmcli` commands listed here must be run as the root user.

1. Do one of the following:
   - If you are adding 7.68 TB SSDs to the storage shelf, leave the appliance powered on and proceed to the next step.
   - If you are adding 22 TB HDDs to the storage shelf, power off the appliance and proceed to the next step. The storage shelf can be powered off by unplugging its AC power cords.
2. To install the new drives into the storage shelf, do the following:
   a. Remove one of the empty slot drive filler panels by pressing its release button [1] and removing it from the drive slot [2] as shown in the following figure.

Copyright © 2025, Oracle and/or its affiliates.

> **Note**
>
> Replace filler panels with drives one at a time to ensure proper storage shelf chassis cooling.

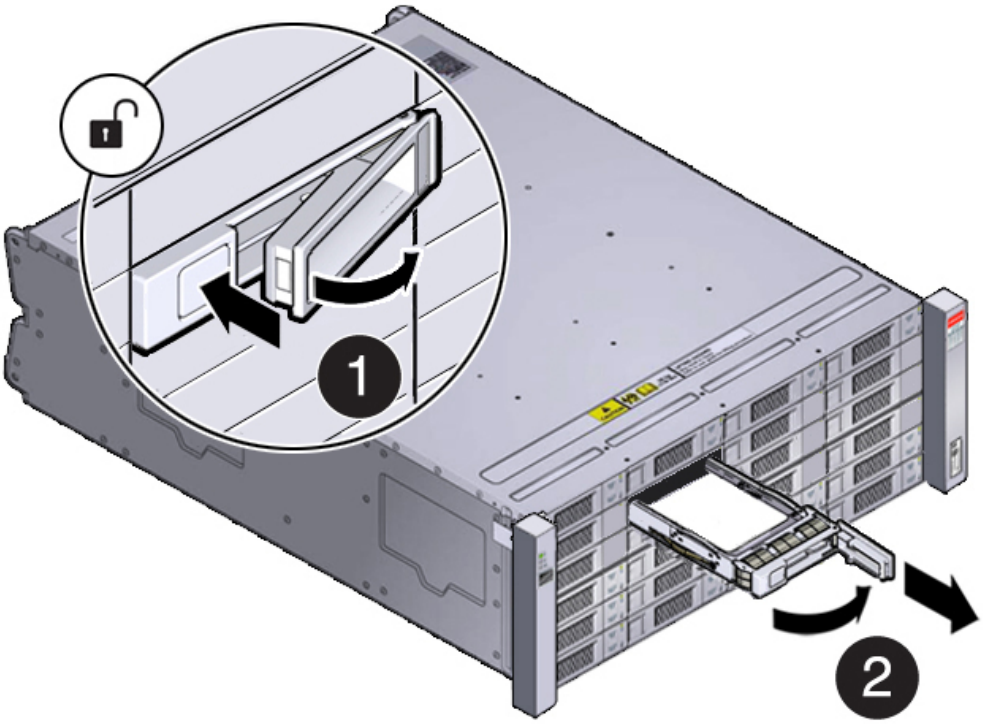

b. Open the drive lever of the new drive by pressing the release button on the drive.

c. Slide the new drive into the drive slot [1] until it engages with the backplane connector and then close the lever to fully seat the drive and lock it into place [2] as shown in the following figure.

   Check that the drive is locked in place and flush with the other drives.

Copyright © 2025, Oracle and/or its affiliates.

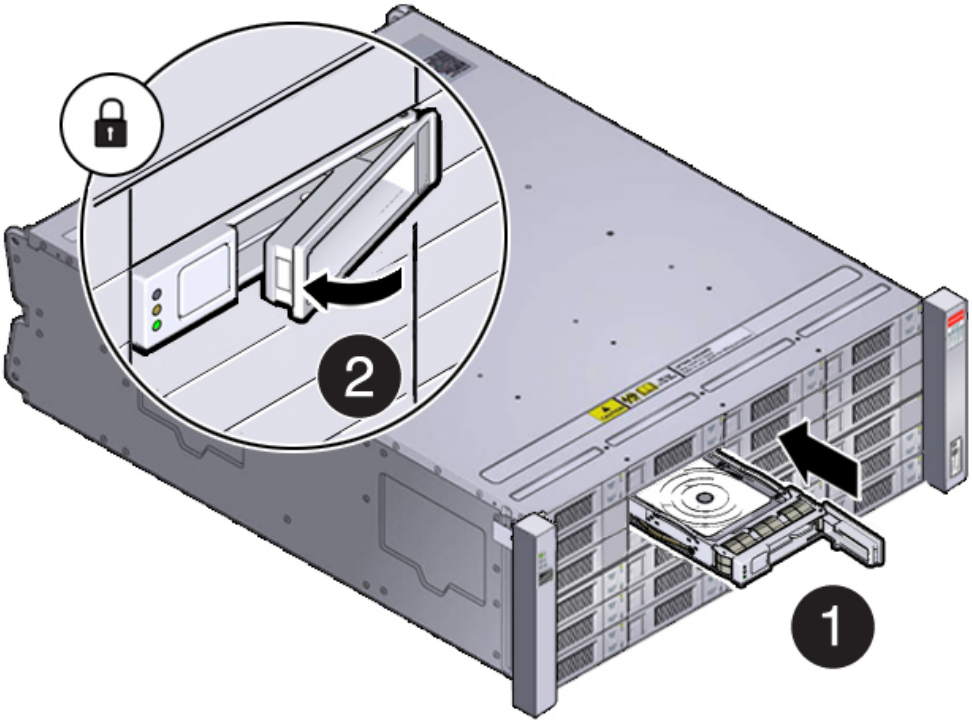

d. Repeat steps a through c until all of the new drives are installed in the storage shelf.

3. Do one of the following:

   - If you added 7.68 TB SSDs to the storage shelf, check that the OK indicator on each new drive is steady green to indicate that it is ready. Then expand the system storage to include the new drives by typing the following command from the primary server node (node 0):

     ```
     # odaadmcli expand storage -ndisk number_of_disks -enclosure 0
     ```

     Where *number_of_disks* is the number of disks being added. The system will then detect and use the new storage. It can take up to 12 minutes to update the configuration. For additional storage commands, refer to the *Deployment and User's Guide*.

   - If you added 22 TB HDDs to the storage shelf, power on the appliance, then re-image and redeploy the appliance software as described in the *Deployment and User's Guide*. The storage shelf will power on as soon as its AC power cords are plugged in.

4. If you are also adding a storage expansion shelf (can only be added to a system with an identically and fully populated storage shelf), you can do so after successfully completing the previous step.

   Refer to the Oracle Database Appliance *Owner's Guide* for information on installing a storage expansion shelf into a rack.

   Refer to the Oracle Database Appliance *Deployment and User's Guide* for information on cabling and storage expansion commands for a storage expansion shelf.

Copyright © 2025, Oracle and/or its affiliates.

Replace a Storage Shelf HDD or SSD (CRU)

Replace a storage disk in an Oracle Database Appliance storage shelf.

> **Note**
>
> After a physical insertion or removal action of a storage component (such as a disk or SAS cable), you should wait before performing the next action to allow the system software to fully process the event. This could take several minutes to complete.

1. Locate the failed drive on the front of the storage shelf.

   Look for the drive with its Service Required indicator and/or Ready-to-Remove indicator lit.

   > **Caution**
   >
   > **Equipment damage.** Do not remove a drive unless you have an immediate replacement.

2. Remove the drive by pressing the release button [1] to release the drive lever and then, rotate the lever open and, grasping the drive body, slide the drive out of the storage shelf [2] as shown in the following figure.

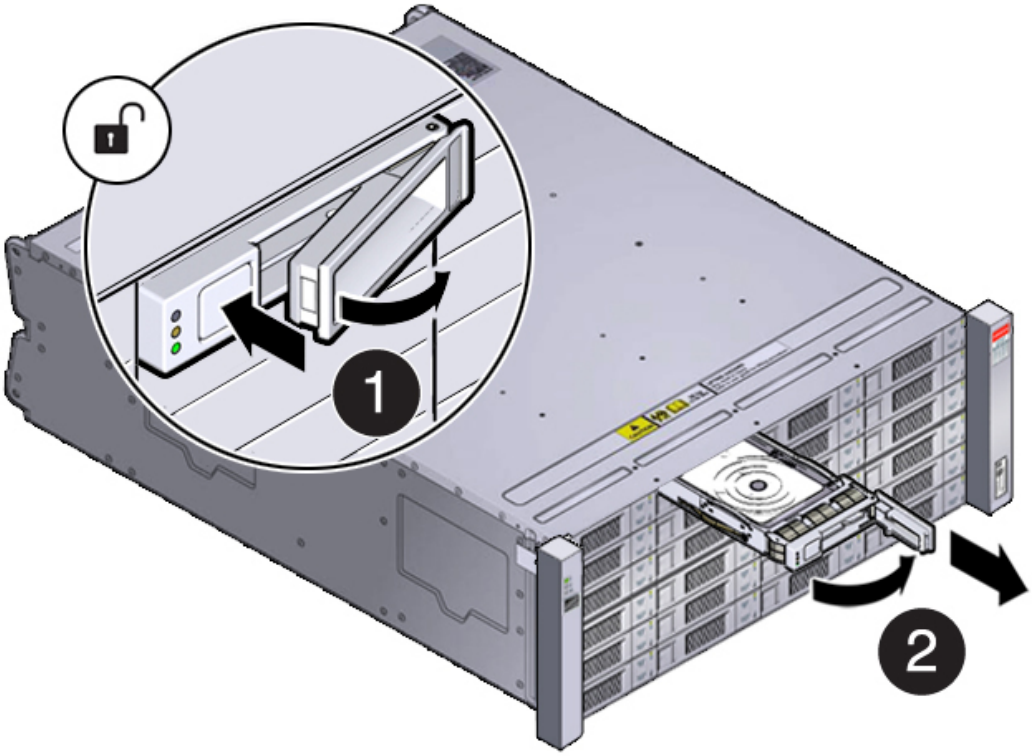

3. Install the replacement drive by opening the drive lever on the replacement drive. Slide the new drive into the drive slot [1] until it engages with the backplane connector and then

Copyright © 2025, Oracle and/or its affiliates.

close the lever to fully seat the drive and lock it into place [2] as shown in the following figure.

Check that the drive is locked in place and flush with the other drives.

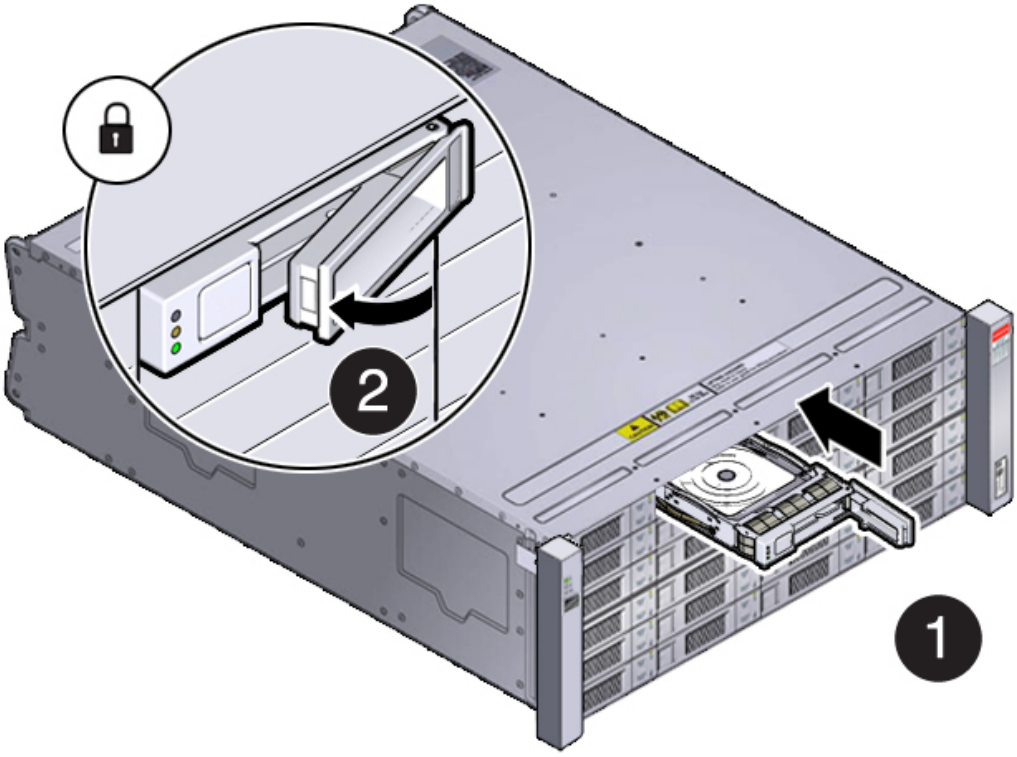

4. Once installed, the system should automatically detect and use the replacement drive. Ensure that the green OK indicator for the replacement drive lights to show that the drive is ready.

   This can take a few minutes to complete.

Replace a Storage Shelf Power Supply (CRU)

Replace a power supply in an Oracle Database Appliance storage shelf.

The storage shelf and the storage expansion shelf each have two power supplies. Indicators (LEDs) on the power supplies indicate their operation state.

The power supplies are redundant and one can be replaced while the appliance is running.

Example figure showing a DE3-24C power supply:

Copyright © 2025, Oracle and/or its affiliates.

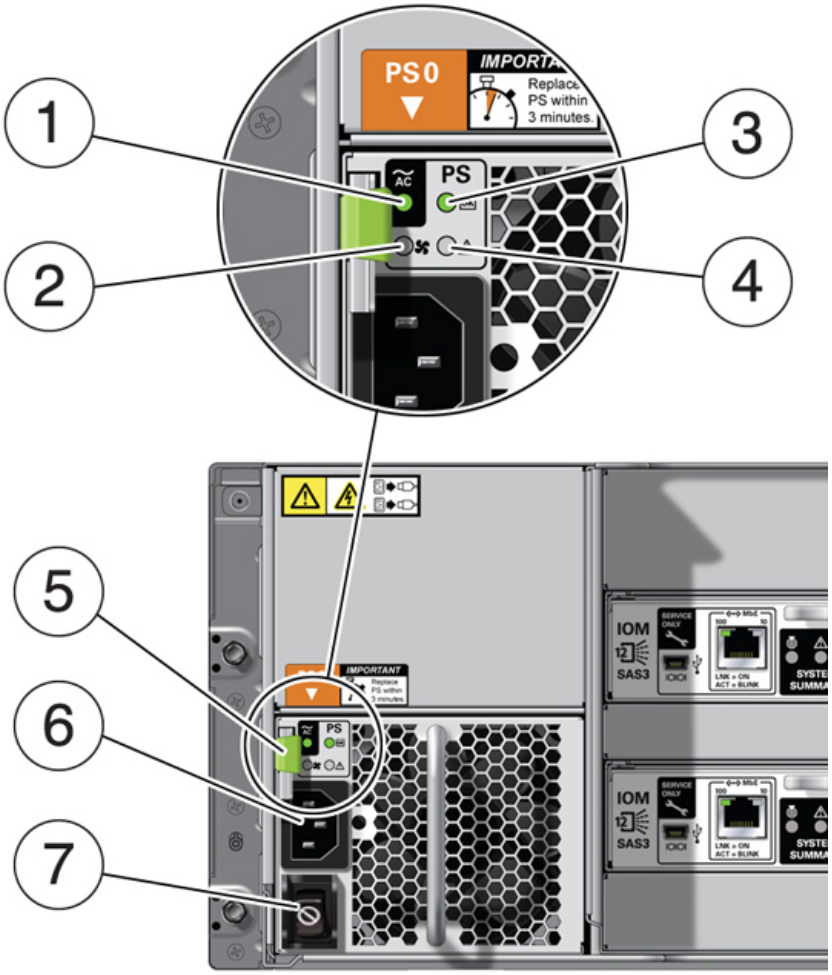

Callout	Description
1	AC power fail indicator
2	Fan fail indicator
3	Power supply status indicator
4	DC power fail indicator
5	Release lever
6	AC connector
7	This switch is non-functional in this product. The AC power cord is used to apply or disconnect power to the power supply.

If any of the indicators are amber, or if the power supply status indicator does not light, replace the power supply.

Copyright © 2025, Oracle and/or its affiliates.

> ⚠ **Caution**
>
> **Equipment damage.** Do not remove a power supply unless you have an immediate replacement.

1. Disconnect the power cord tie strap from the power cord, and unplug the power cord from the power supply.

   This removes power from the power supply.

2. Remove the power supply unit by grasping the power supply handle, push the release button [1], and slide the power supply out of the chassis [2] as shown in the following figure.

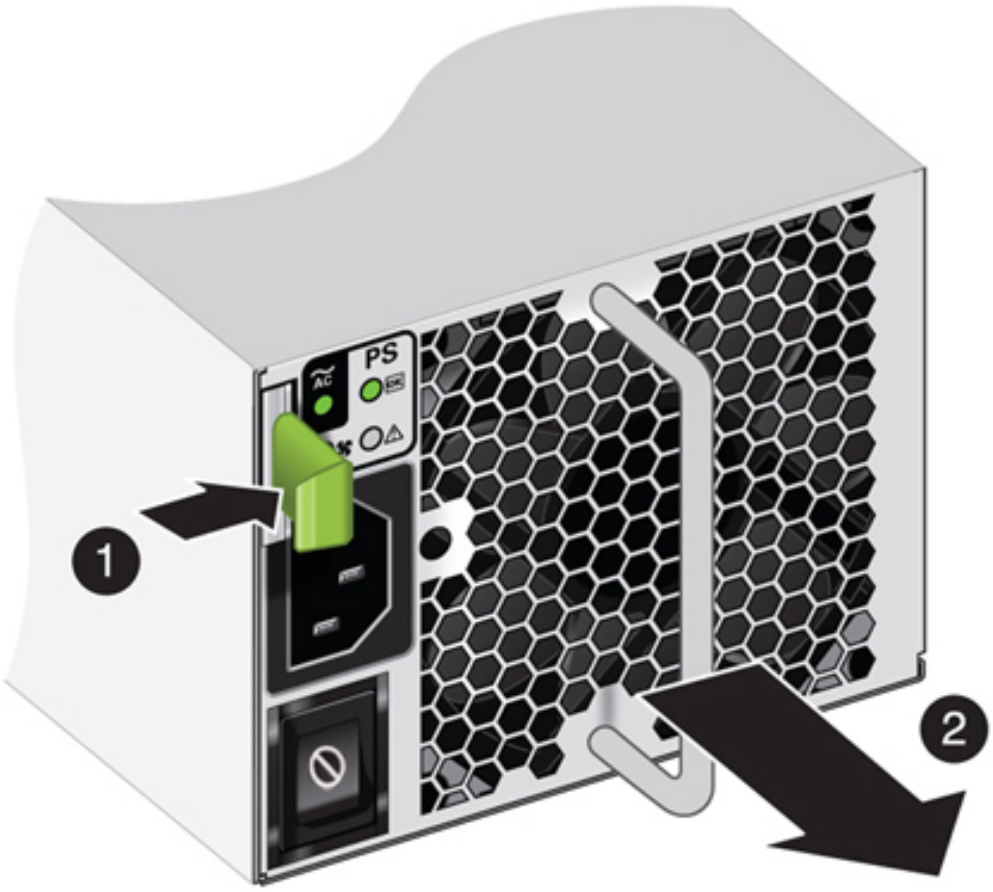

3. Slide the replacement power supply module into the chassis.

   When fully installed, you should hear a click of the release lever returning to the locked position.

4. Plug the power cord into the new power supply and attach the power cord tie strap to the power cord.

   The Power/OK status LED should be a steady green, and all other indicators should be off.

Copyright © 2025, Oracle and/or its affiliates.

Replace a Storage Shelf I/O Module (CRU)

Replace an IO module in an Oracle Database Appliance storage shelf.

Storage Shelf SAS I/O modules are fully redundant and can be replaced while the appliance is running.

> **Note**
>
> After a physical insertion or removal action of a storage component (such as a disk or SAS cable), you should wait before performing the next action to allow the system software to fully process the event. This could take up to 3 minutes to complete.

Example figure showing the DE3-24C:

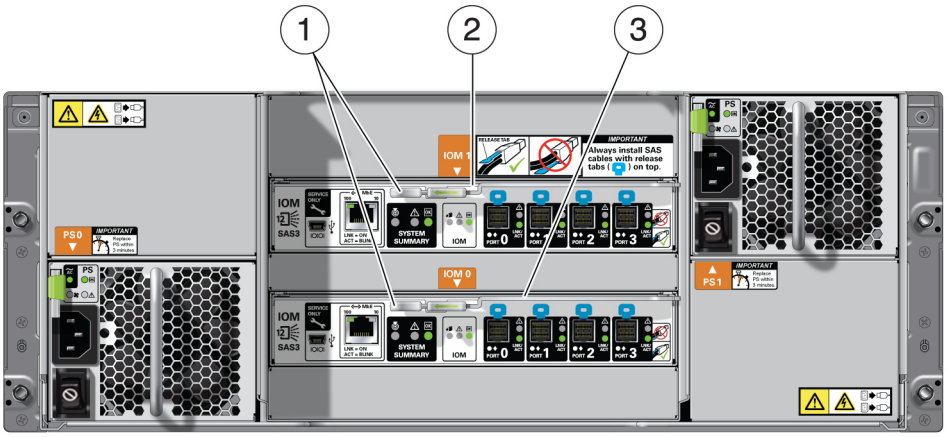

Callout	Description
1	I/O module locking levers
2	I/O module 1 (top)
3	I/O module 0 (bottom)

> **Caution**
>
> **Equipment damage.** Do not remove an I/O module unless you have an immediate replacement.

1. Disconnect the cables from the I/O module. Be sure to mark the cables so you can return them to their proper connectors.
2. Remove the I/O module using your thumb and forefinger, pinch the release buttons [1] together to release the locking lever [2] as shown in the following figure. Grasp the lever and remove the I/O module from the chassis [3] as shown in the following figure.

Copyright © 2025, Oracle and/or its affiliates.

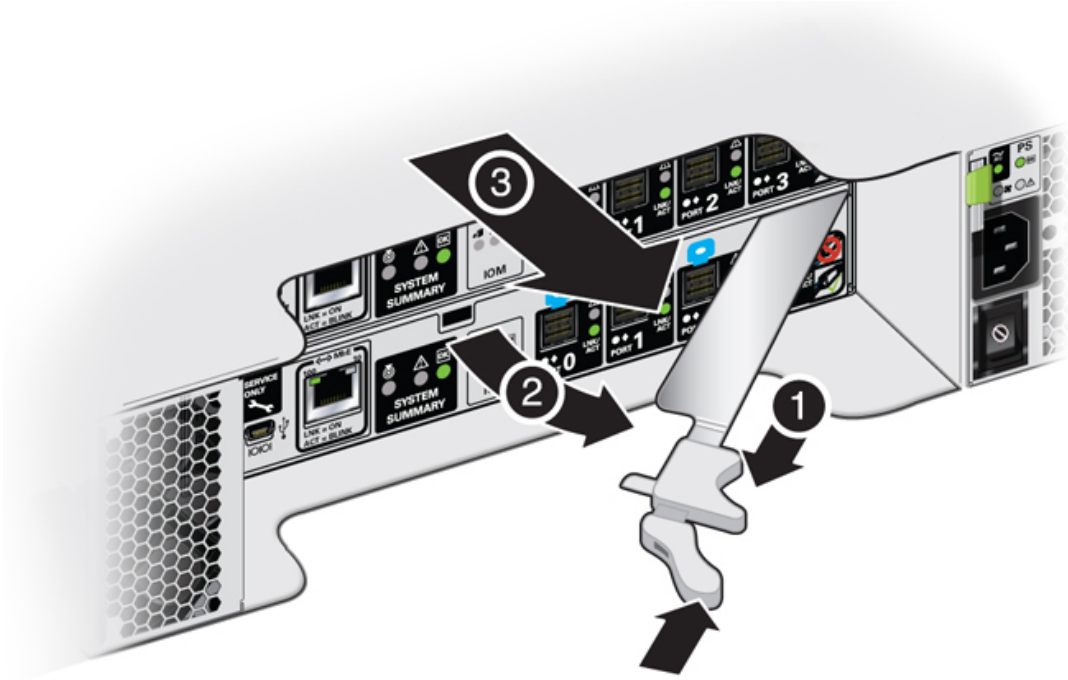

3. Open the lever in the new I/O module if it is not already open.
4. Slide the new I/O module into the disk shelf and close the locking lever.

> ⚠ **Caution**
>
> **Equipment damage.** Be careful not to damage the connector pins at the back of the I/O module.

5. Reconnect the cables.
6. Verify that the new I/O module is working correctly.
   - After approximately 60 seconds, the power LED should be solid green and the Fault/Locate LED should be off.
   - For each port that has a cable connected, all four activity LEDs should be solid green.

Copyright © 2025, Oracle and/or its affiliates.

4

Servicing CRUs That Require System Power Off

Perform tasks for servicing customer-replaceable units (CRUs) for the Oracle Database Appliance that require you to power off system components.

> **Note**
>
> The servicing of hot-plug components such as the HDDs, SDDs, power supplies, and fans is described in Servicing CRUs That Do Not Require System Power Off.

- Servicing Internal M.2 Flash SSDs (CRU)
  Perform the task of servicing M.2 flash solid-state drives (SSDs).
- Servicing DIMMs (CRU)
  Perform this task to service dual in-line memory modules (DIMMs).
- Servicing PCIe Cards (CRU)
  Perform tasks to service PCIe cards in the system.
- Servicing the Battery (CRU)
  This section describes how to service the system battery.

Servicing Internal M.2 Flash SSDs (CRU)

Perform the task of servicing M.2 flash solid-state drives (SSDs).

M.2 flash SSDs are replaceable components that require you to power off the server before servicing.

> **Note**
>
> The Oracle Database Appliance does not support M.2 Flash SSD hot plug.

> **Caution**
>
> These procedures require that you handle components that are sensitive to electrostatic discharge. This sensitivity can cause the component to fail. To avoid damage, ensure that you follow antistatic practices, as described in Electrostatic Discharge Safety.

Copyright © 2025, Oracle and/or its affiliates.

> **Caution**
>
> Ensure that all power is removed from the server before removing or installing M.2 SSDs or flash risers. You must disconnect all power cables from the system before performing these procedures.

- Identify and Remove an M.2 Flash SSD
- Install an M.2 Flash SSD
- Remove a Flash Riser Board
- Install a Flash Riser Board

Identify and Remove an M.2 Flash SSD

The server can contain up to two flash riser boards (SSDR0, SSDR1). Each flash riser board can contain one M.2 flash SSD.

1. If you have a failed M.2 SSD, determine which SSD has failed.
   a. Log into Oracle ILOM CLI and run the `show` command to list available storage controllers.

      For example:

      ```
      -> show /System/Storage/Controllers/
                     /System/Storage/Controllers
                     Targets:
                     Controller_0
                     Controller_1
                     Controller_2
                     Controller_3
      ```

      Note that the M.2 SSDs are normally the last two listed in the output.

   b. Then list the status of a specific M.2 SSD.

      For example:

      ```
      -> show /System/Storage/Controllers/Controller_2
          Targets:
          Properties:
              health = OK
              health_details = -
              serial_number = 23023E3387B3
              location = SSDR0/SSD0/NVME (SSD Riser 0 NVME SSD 0)
              type = NVMe
              manufacturer = MICRON
              model = Micron_7450_MTFDKBA480TFR
              wwns = Not Available
              number_of_ports = Not Available
      ```

      For a failed SSD, note the location to ensure you replace the correct SSD. The location includes the specific flash riser (such as SSDR0 or SSDR1) on which the SSD resides. The labels for the flash risers are on the motherboard near the rear of the system (look for **SSDR 0** and **SSDR 1**).

Copyright © 2025, Oracle and/or its affiliates.

> **Note**
>
> Additionally, failed components are listed under `/System/Open_Problems` in Oracle ILOM.

2. Prepare the server for service.
   a. Power off the server.

      See Powering Down the Server.
   b. Disconnect the power cords from the power supplies.

      See Disconnect Cables From the Server.
   c. Extend the server into maintenance position.

      See Extend the Server to the Maintenance Position.
   d. Attach an antistatic wrist strap to your wrist, and then to a metal area on the chassis.

      See Take Antistatic Measures.
   e. Remove the server top cover.

      See Remove the Server Top Cover.
3. To remove the flash riser board, do the following:
   a. Rotate both riser board securing levers outward as far as they go.

      > **Caution**
      >
      > The levers are not ejectors. Attempting to force the levers open too far can damage them.

   b. Carefully lift the riser board straight up to remove it from its motherboard socket.

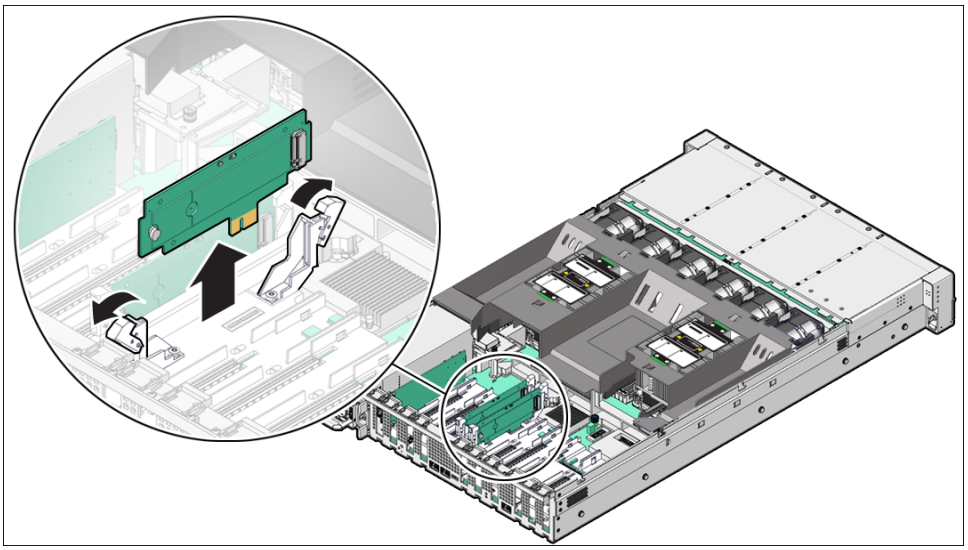

4. Place the riser board on an antistatic mat.
5. Remove the M.2 flash SSD from the riser board.
   a. Using your fingers, push the part of the plastic retainer clip that protrudes through the hole on the back side of the riser board through the hole to the front side of the riser

Copyright © 2025, Oracle and/or its affiliates.

board [1]. Then gently lift up on the end of the M.2 flash SSD approximately one-half to one inch and remove the plastic retainer clip from the end of the M.2 flash SSD.

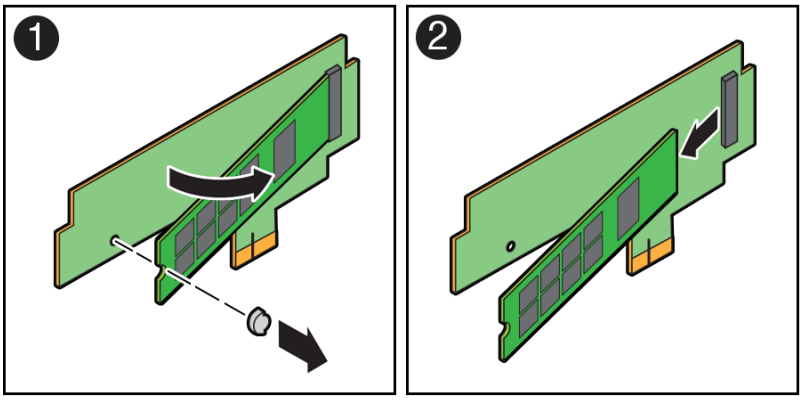

b. Remove the M.2 flash SSD from its connector socket on the riser board socket [2].

c. Place the M.2 flash SSD on an antistatic mat.

Install an M.2 Flash SSD

The flash riser board should have already been removed as described in Identify and Remove an M.2 Flash SSD.

1. Unpack the replacement M.2 flash SSD and place it on an antistatic mat.
2. Install the M.2 flash SSD onto the riser board.
   a. At an approximate 45 degree angle, insert the M.2 flash SSD into its connector socket on the riser board socket [1].

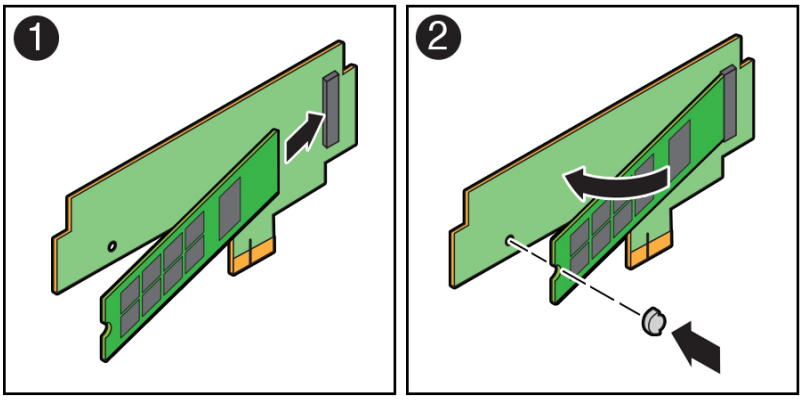

   b. With the M.2 flash SSD at an approximate 45 degree angle to the riser board, insert the plastic retainer clip into the notched end of the M.2 flash SSD and then push down on the end of the M.2 flash SSD until the retainer clip snaps into place in the hole on the riser board [2].

      You hear an audible click when the M.2 flash SSD is secured to the flash riser board.
3. Install the flash riser board.
   a. Ensure that the riser board securing levers on the motherboard are in the open position.

Copyright © 2025, Oracle and/or its affiliates.

b. Align the notch in the replacement riser board with the connector key in the connector socket.

   The notch ensures that the riser board is oriented correctly.

c. Push the riser board into its connector socket on the motherboard until the riser board is securely seated in the socket.

> ⚠ **Caution**
>
> If the riser board does not easily seat into the connector socket, verify that the notch in the riser board is aligned with the connector key in the connector socket. If the notch is not aligned, damage to the riser board might occur.

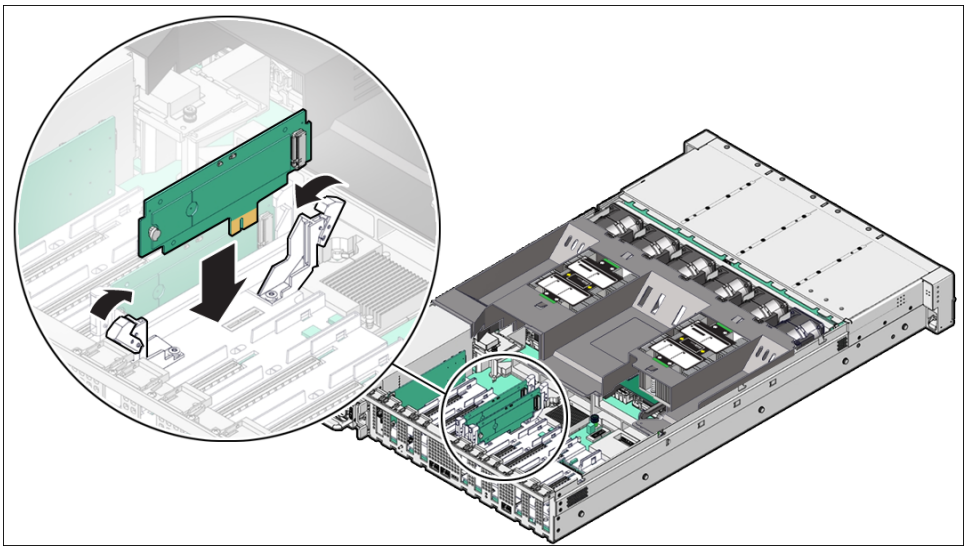

d. Rotate the riser board securing levers inward until the riser board is secured in place.

4. Return the server to operation.

   a. Install the server top cover.

      See Install the Server Top Cover.

   b. Return the server to the normal rack position.

      See Return the Server to the Normal Rack Position.

   c. Reconnect the power cords to the server power supplies, and power on the server.

      See Powering On Oracle Database Appliance.

   d. Verify that the System OK LED indicator is lit.

Remove a Flash Riser Board

Follow the instructions in this section if you need to replace a flash riser board.

The server includes two flash riser boards (SSDR0, SSDR1). Each flash riser board can contain one M.2 flash SSD.

1. Prepare the server for service.

   a. Power off the server.

Copyright © 2025, Oracle and/or its affiliates.

See Powering Down the Server.

b. Disconnect the power cords from the power supplies.

See Disconnect Cables From the Server.

c. Extend the server into maintenance position.

See Extend the Server to the Maintenance Position.

d. Attach an antistatic wrist strap to your wrist, and then to a metal area on the chassis.

See Take Antistatic Measures.

e. Remove the server top cover.

See Remove the Server Top Cover.

2. To remove the flash riser board, do the following:

a. Rotate both riser board securing levers outward as far as they go.

> ⚠ **Caution**
>
> The levers are not ejectors. Attempting to force the levers open too far can damage them.

b. Carefully lift the riser board straight up to remove it from its motherboard socket.

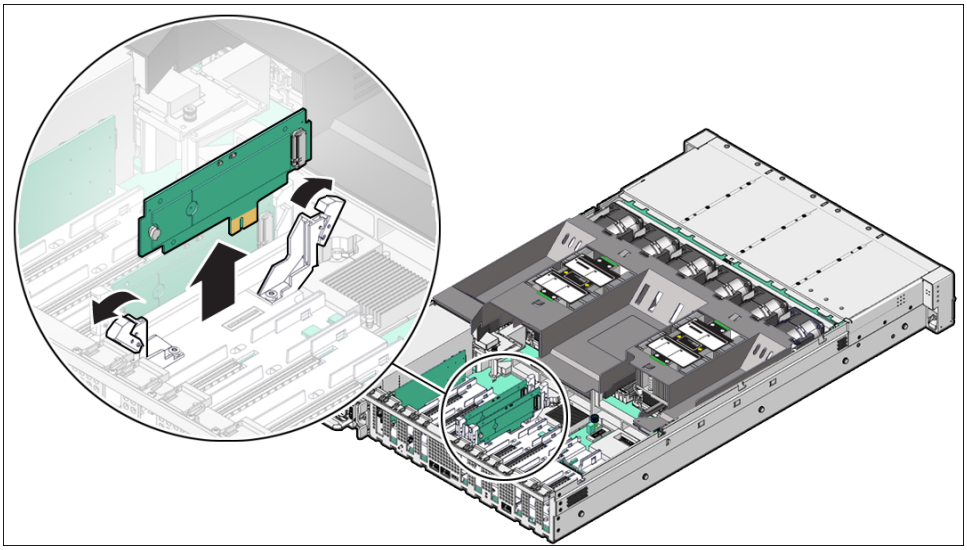

3. Place the riser board on an antistatic mat.

4. Remove the M.2 flash SSD from the riser board.

a. Using your fingers, push the part of the plastic retainer clip that protrudes through the hole on the back side of the riser board through the hole to the front side of the riser board [1]. Then gently lift up on the end of the M.2 flash SSD approximately one-half to one inch and remove the plastic retainer clip from the end of the M.2 flash SSD.

Copyright © 2025, Oracle and/or its affiliates.

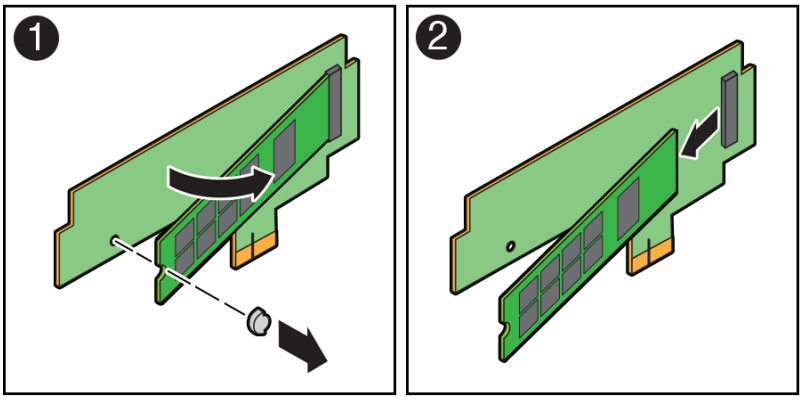

b. Remove the M.2 flash SSD from its connector socket on the riser board socket [2].

c. Place the M.2 flash SSD on an antistatic mat.

Install a Flash Riser Board

The system motherboard provides two slots (labeled **SSDR 0** and **SSDR 1**) for flash riser boards. When installing flash riser boards, install the first riser board into slot **SSDR 0** and the second into **SSDR 1**.

1. Unpack the replacement flash riser board and place it on an antistatic mat.
2. Install the M.2 flash SSD onto the riser board.
   a. At an approximate 45 degree angle, insert the M.2 flash SSD into its connector socket on the riser board socket [1].

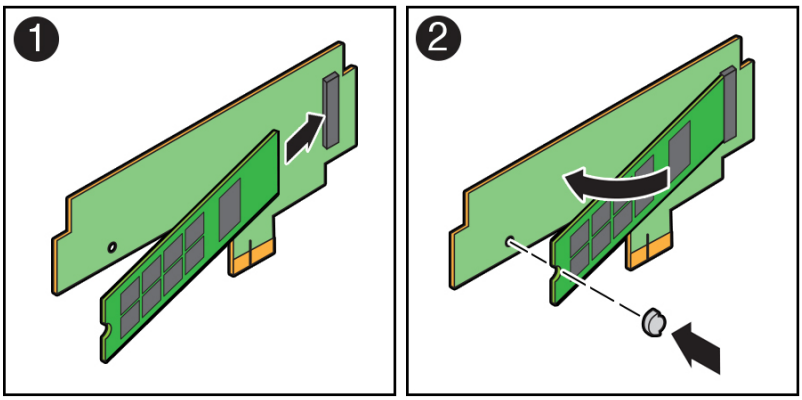

   b. With the M.2 flash SSD at an approximate 45 degree angle to the riser board, insert the plastic retainer clip into the notched end of the M.2 flash SSD and then push down on the end of the M.2 flash SSD until the retainer clip snaps into place in the hole on the riser board [2].

      You hear an audible click when the M.2 flash SSD is secured to the flash riser board.
3. Install the flash riser board.
   a. Ensure that the riser board securing levers on the motherboard are in the open position.
   b. Align the notch in the replacement riser board with the connector key in the connector socket.

Copyright © 2025, Oracle and/or its affiliates.

The notch ensures that the riser board is oriented correctly.

c. Push the riser board into its connector socket on the motherboard until the riser board is securely seated in the socket.

> ⚠ **Caution**
>
> If the riser board does not easily seat into the connector socket, verify that the notch in the riser board is aligned with the connector key in the connector socket. If the notch is not aligned, damage to the riser board might occur.

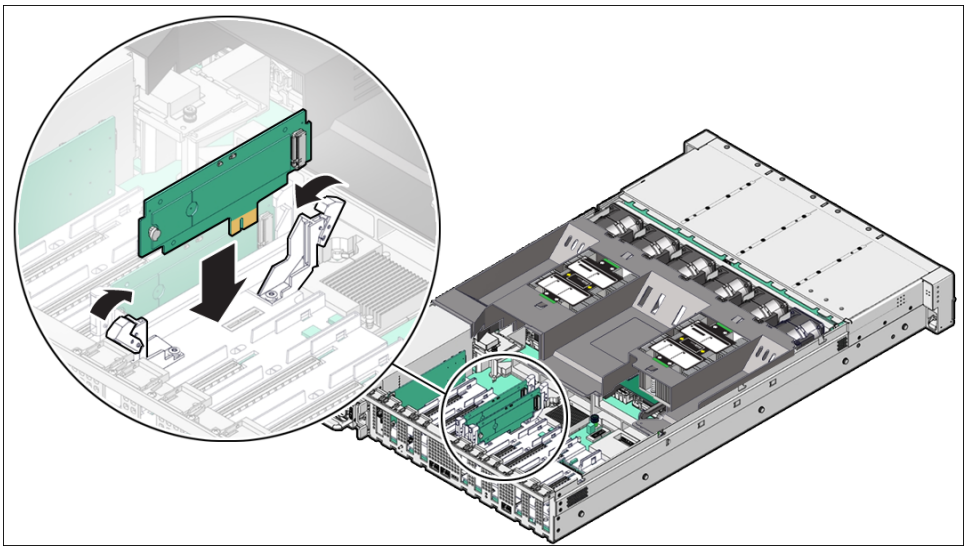

d. Rotate the riser board securing levers inward until the riser board is secured in place.

4. Return the server to operation.

   a. Install the server top cover.

      See Install the Server Top Cover.

   b. Return the server to the normal rack position.

      See Return the Server to the Normal Rack Position.

   c. Reconnect the power cords to the server power supplies, and power on the server.

      See Powering On Oracle Database Appliance.

   d. Verify that the System OK LED indicator is lit.

Servicing DIMMs (CRU)

Perform this task to service dual in-line memory modules (DIMMs).

DIMMs are replaceable components that require you to power off the server before servicing.

Copyright © 2025, Oracle and/or its affiliates.

> **Caution**
>
> These procedures require that you handle components that are sensitive to electrostatic discharge. This sensitivity can cause the components to fail. To avoid damage, ensure that you follow antistatic practices as described in Electrostatic Discharge Safety.

> **Caution**
>
> Ensure that all power is removed from the server before removing or installing DIMMs, or damage to the DIMMs might occur. You must disconnect all power cables from the system before performing these procedures.

The topics and procedures in this section provide information to assist you when replacing a DIMM or upgrading DIMMs.

- DIMM and Processor Physical Layout
- DIMM Population Scenarios
- DIMM Population Rules
- Populating DIMMs for Optimal System Performance
- Using the Server Fault Remind Button
- Identify and Remove a DIMM
- Install a DIMM

DIMM and Processor Physical Layout

The physical layout of the DIMMs and processor(s) is shown in the following figure. When viewing the server from the front, processor 0 (P0) is on the left.

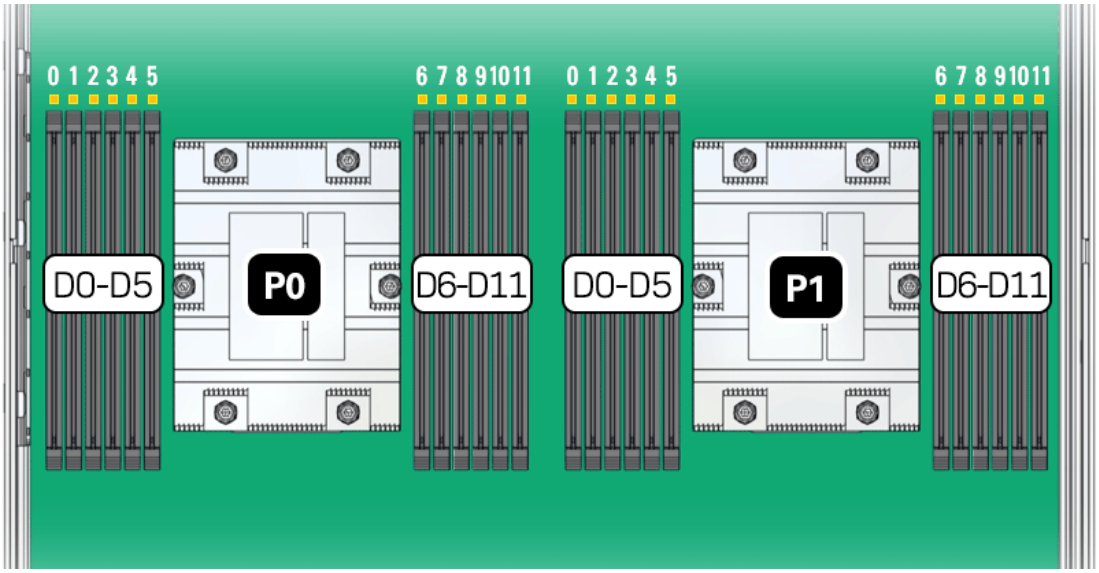

Each processor, P0 and P1, has twelve DIMM slots (D0-D11), six on each processor side. Each DIMM slot supports a single memory channel, for total of twelve DDR5 memory channels per processor (0-11).

Copyright © 2025, Oracle and/or its affiliates.

Table 4-1 Memory Channels and DIMM Slots for P0 and P1

Memory Channel	DIMM Slot
0	D3
1	D1
2	D0
3	D5
4	D4
5	D2
6	D8
7	D10
8	D11
9	D6
10	D7
11	D9

Note

In single-processor systems, the DIMM slots associated with processor 1 (P1) are nonfunctional and should not be populated with DIMMs.

DIMM Population Scenarios

There are two scenarios in which you are required to populate DIMMs:

- A DIMM fails and needs to be replaced.

  In this scenario, you can use the Fault Remind button to determine the failed DIMM, and then remove the failed DIMM and replace it. To ensure that system performance is maintained, you must replace the failed DIMM with a DIMM of the same size (in gigabytes) and type (quad-rank or dual-rank). In this scenario, do not change the DIMM configuration.
- You purchased new DIMMs and want to use them to upgrade the server memory.

  In this scenario, you must adhere to the DIMM population rules and follow the recommended DIMM population order for optimal system performance.

DIMM Population Rules

The population rules for adding DIMMs to the server are as follows:

- The server supports:
  - Up to 24 DDR5 DIMMs, 12 per processor socket.
  - 64 GB dual-rank (DR) Registered DIMMs (RDIMMS).
  - A maximum supported memory speed of 6400 MT/s.

    However, the maximum attainable memory speed could be limited by the maximum speed supported by a specific processor or DIMM. All memory installed in the system operates at the same speed, or frequency.

Copyright © 2025, Oracle and/or its affiliates.

- Populate all 12 memory DIMMs per processor to achive the highest system performance. If populating 12 memory DIMMs per processor is not feasible, populate each processor with 1, 2, 4, 6, 8, or 10 DIMMs.
- Populate each memory channel with the same capacity and number of banks.
- Populate processor 0 (P0) and processor 1 (P1) using the same DIMM configuration. Failure to do so will result in lower system performance.
- The server operates properly with a minimum of one DIMM installed per processor. Install one DIMM in slot D5 on each processor.
- Each DIMM is shipped with a label identifying its rank classification (dual or quad). The following identifies the label corresponding to the supported DIMM rank classification: Dual-rank RDIMM 2Rx4
- Do not mix DIMM types in a server. Load-Reduced (LRDIMMs) are not supported.
- The server does not support lockstep memory mode, which is also known as double device data correction, or Extended ECC.
- Populate the DIMM slots in the order described in the following sections, which provide an example of how to populate the DIMM slots to achieve optimal system performance.
- DIMM fillers must be installed in any unpopulated DIMM slots. This is a requirement for proper server cooling.

Populating DIMMs for Optimal System Performance

Supported per-processor configurations for optimal performance are listed below. DIMM slots must be populated identically for both processors. For an illustration, see DIMM and Processor Physical Layout.

- Populate DIMMs of the same size in multiples of four (for a single processor system) or eight (for a dual processor system).
- The DIMM population for each processor (P0 and P1) must be identical.
- The DIMM population for each server node must be identical.

ODA X11-S DIMM Populations (Single Processor)	ODA X11-L DIMM Populations (Dual Processor)	ODA X11-HA DIMM Populations (Dual Processor, Dual Server Node)
• Four DIMM configuration (factory default). DIMM slots D3, D5, D6 and D8 are populated • Eight DIMM configuration. DIMM slots D1, D3, D4, D5, D6, D7, D8 and D10 are populated • Twelve DIMM configuration. Slots D0 through D11 are populated	• Eight DIMM configuration (factory default). DIMM slots D3, D5, D6 and D8 are populated for each processor • Sixteen DIMM configuration. DIMM slots D1, D3, D4, D5, D6, D7, D8 and D10 are populated for each processor • Twenty-four DIMM configuration. DIMM slots D0 through D11 are populated for each processor	• Eight DIMM configuration (factory default). DIMM slots D3, D5, D6 and D8 are populated for each processor • Sixteen DIMM configuration. DIMM slots D1, D3, D4, D5, D6, D7, D8 and D10 are populated for each processor • Twenty-four DIMM configuration. DIMM slots D0 through D11 are populated for each processor

Using the Server Fault Remind Button

When you press the server Fault Remind button [1], an LED located next to the Fault Remind button lights green which indicates that there is sufficient voltage present in the fault remind

Copyright © 2025, Oracle and/or its affiliates.

circuit to light any fault LEDs that were lit due to a component failure. If this LED does not light when you press the Fault Remind button, it is likely that the capacitor powering the fault remind circuit has lost its charge. This can happen if the Fault Remind button is pressed for several minutes with fault LEDs lit, or if power is removed from the server for more than 15 minutes.

The following figure shows the location of the Fault Remind button on the motherboard.

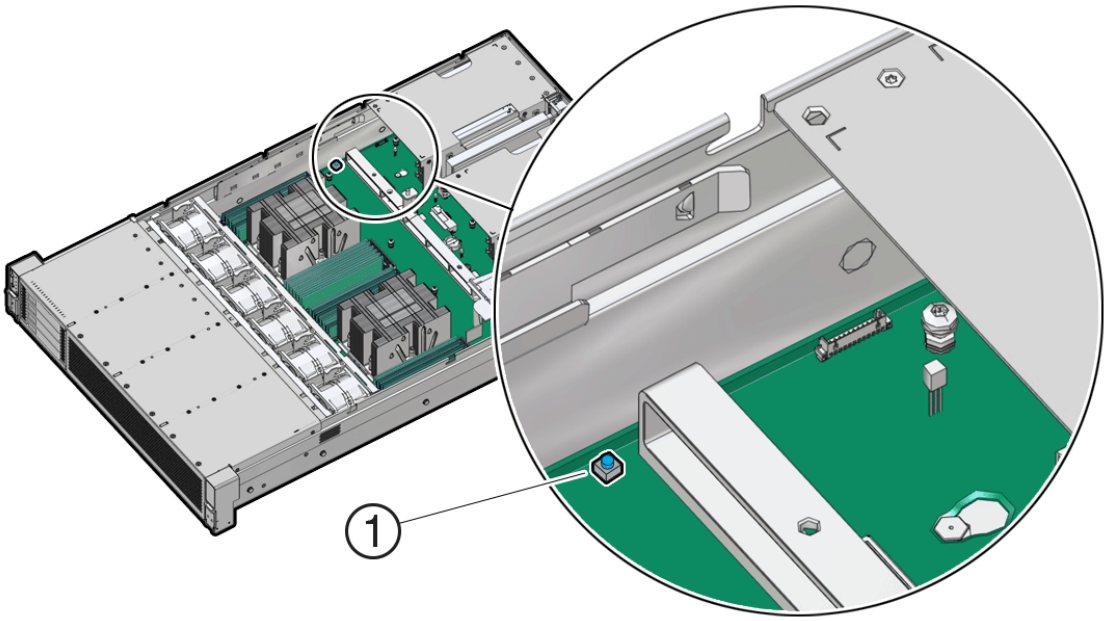

Identify and Remove a DIMM

1. Prepare the server for service.
   a. Power off the server.

      See Powering Down the Server.
   b. Disconnect the power cords from the power supplies.

      See Disconnect Cables From the Server.
   c. Extend the server into the maintenance position.

      See Extend the Server to the Maintenance Position.
   d. Attach an antistatic wrist strap to your wrist and then to a metal area on the chassis.

      See Take Antistatic Measures.
   e. Remove the server top cover.

      See Remove the Server Top Cover.
   f. Remove the air baffle.

      See Remove the Air Baffle.
2. Identify and note the location of the failed DIMM by pressing the Fault Remind button on the motherboard.

   See Using the Server Fault Remind Button.

   Failed DIMMs are identified with a corresponding amber LED on the motherboard.

   - If the DIMM Fault LED is off, then the DIMM is operating properly.

Copyright © 2025, Oracle and/or its affiliates.

- If the DIMM Fault LED is on (amber), then the DIMM is failed and must be replaced [1].

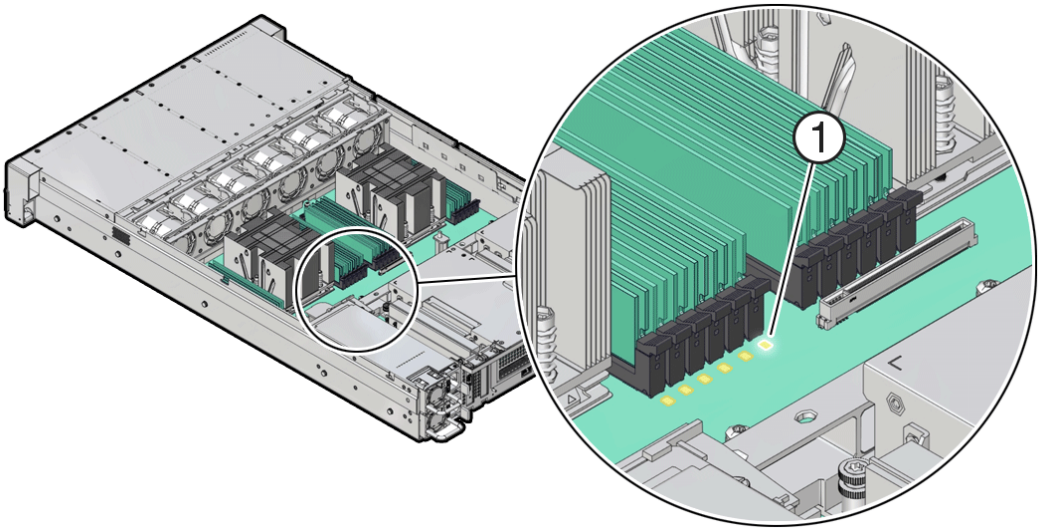

3. To remove the failed DIMM, do the following:
   a. Rotate both DIMM slot ejectors outward as far as they go.

      The DIMM is partially ejected from the slot.
   b. Carefully lift the DIMM straight up to remove it from the slot.

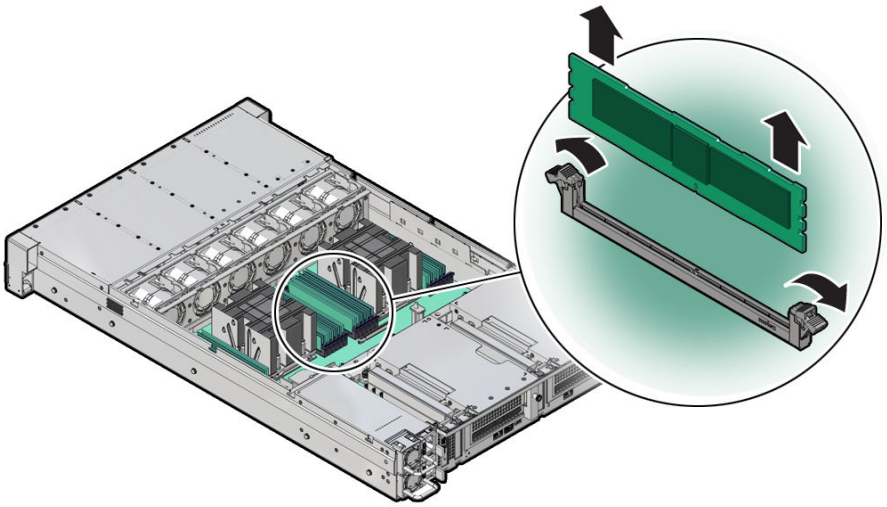

4. Replace each failed DIMM with either another DIMM of the same rank size (quad-rank or dual-rank) or leave the slot empty.

   For DIMM replacement instructions, see Install a DIMM.

Install a DIMM

1. Unpack the replacement DIMM and place it on an antistatic mat.
2. Ensure that the replacement DIMM matches the size, type, and rank of the DIMM it is replacing.

Copyright © 2025, Oracle and/or its affiliates.

> **Note**
>
> See DIMM Population Rules and Populating DIMMs for Optimal System Performance.

3. Install a DIMM.
   a. Ensure that the ejector tabs are in the open position.
   b. Align the notch in the replacement DIMM with the connector key in the connector slot.

      The notch ensures that the DIMM is oriented correctly.
   c. Push the DIMM into the connector slot until the ejector tabs lock the DIMM in place.

      If the DIMM does not easily seat into the connector slot, verify that the notch in the DIMM is aligned with the connector key in the connector slot.

      > **Caution**
      >
      > If the notch is not aligned, damage to the DIMM might occur.

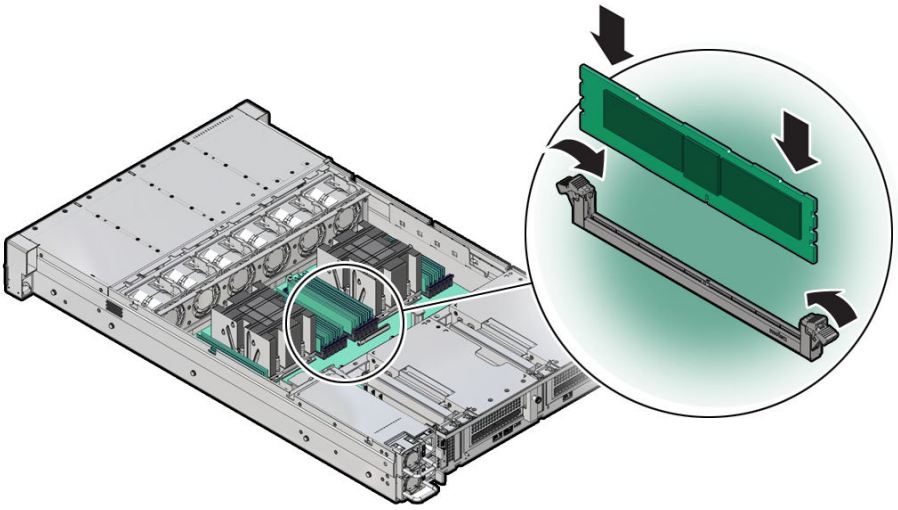

4. Repeat Step 3 until all replacement DIMMs are installed.
5. Return the server to operation.
   a. Install the server top cover.

      See Install the Server Top Cover.
   b. Return the server to the normal rack position.

      See Return the Server to the Normal Rack Position.
   c. Reconnect the power cords to the server power supplies, and power on the server.

      See Powering On Oracle Database Appliance.
   d. Verify that the System OK LED indicator is lit.
6. (Optional) Use Oracle ILOM to clear server DIMM faults.

   DIMM faults are automatically cleared after a new DIMM has been installed. If you need to manually clear DIMM faults, refer to Oracle ILOM Documentation.

Copyright © 2025, Oracle and/or its affiliates.

> **Note**
>
> If you want to move a failed DIMM to a new DIMM slot or re-seat a DIMM for troubleshooting, you must first manually clear the associated DIMM fault. Otherwise, the DIMM fault might follow the DIMM to the new slot location or reoccur in the current slot location, causing a false DIMM fault condition.

Servicing PCIe Cards (CRU)

Perform tasks to service PCIe cards in the system.

PCIe cards are replaceable components that require you to power off the server before servicing.

> **Note**
>
> The Oracle Database Appliance does not support PCIe card hot plug.

> **Caution**
>
> These procedures require that you handle components that are sensitive to electrostatic discharge. This sensitivity can cause the components to fail. To avoid damage, ensure that you follow antistatic practices as described in Electrostatic Discharge Safety.

> **Caution**
>
> Ensure that all power is removed from the server before removing or installing PCIe cards. You must disconnect all power cables from the system before performing these procedures.

- PCIe Slot Locations
- Adding Optional PCIe Cards (CRU)
  Describes installation sequence for adding optional PCIe cards to an Oracle Database Appliance.
- Remove a Half Height PCIe Card
- Install a Half Height PCIe Card

PCIe Slot Locations

Depending on the number of processors installed, the server is designed to support up to 9 half height PCIe cards.

- All card slots support Half Height, Half Length (HHHL) PCIe cards (Low profile short) at PCIe Gen4 or Gen5.
- All PCIe card slots are 75W capable slots. All of the PCIe slots comply with the PCI Express 5.0 specification and can accommodate 75 Watt PCIe cards.

Copyright © 2025, Oracle and/or its affiliates.

- For the Oracle Database Appliance X11-S, a single processor system, PCIe card slots 1 through 4 are nonfunctional.
- For the Oracle Database Appliance X11-S and X11-L, a special Oracle Retimer card is installed in PCIe slot 6 and is required for front panel NVMe storage drives to work. PCIe slot 7 is non-functional.

Adding Optional PCIe Cards (CRU)

Describes installation sequence for adding optional PCIe cards to an Oracle Database Appliance.

The Oracle Database Appliance X11 series systems support up to three optional public network cards (or three network cards per node if you have an X11-HA). The Oracle Database Appliance X11-L supports up to four Oracle Flash Accelerator 680 PCIe Cards.

- If possible, order any optional PCIe cards when you initially buy the system and have the cards factory installed.
- If you want to add or replace PCIe cards after your appliance has been delivered from the factory, the following rules apply:
  - You can install any of the supported PCIe cards listed in the table below.

    > **Note**
    >
    > Before you add Oracle Flash Accelerator 680 PCIe cards to the Oracle Database Appliance X11-L, you must first ensure that all four front-mounted NVMe drives have been installed. If you only have two of the four front drive slots populated, you need to add two more. See Adding NVMe Expansion Storage.

  - You must install optional PCIe cards in the proper order and slots (refer to the table below).
  - If you want to replace an existing network card, you must first delete the network card and its network interface using the appliance software. Then replace the physical network card with the new one. When the appliance is restarted the new network card will be used. For specific instructions on software removal or configuration of a public network card, refer to the *Deployment and User's Guide*.

    > **Note**
    >
    > You **cannot** replace the factory installed public network card installed in PCIe slot 5. In addition, for the Oracle Database Appliance X11-HA, you **cannot** replace the factory installed cluster interconnect network card installed in PCIe slot 1.

The following table describes the supported PCIe cards and the order in which they can be installed in the system.

Copyright © 2025, Oracle and/or its affiliates.

Description	Oracle Database Appliance X11-S	Oracle Database Appliance X11-L	Oracle Database Appliance X11-HA (per node)
Supported PCIe cards	• Oracle Dual Port 25 Gb Ethernet Adapter • Oracle Quad Port 10GBase-T Adapter	• Oracle Dual Port 25 Gb Ethernet Adapter • Oracle Quad Port 10GBase-T Adapter • Oracle Flash Accelerator 680 PCIe Card	• Oracle Dual Port 25 Gb Ethernet Adapter • Oracle Quad Port 10GBase-T Adapter
Installation order	**Optional network cards:** 1. By default, the server comes with a public network card installed in PCIe slot 5. 2. A second public network card can be installed in PCIe slot 9. 3. A third public network card can be installed in PCIe slot 8.	**Optional network cards:** 1. By default, the server comes with a public network card installed in PCIe slot 5. 2. A second public network card must be installed in PCIe slot 4. 3. A third public network card must be installed in PCIe slot 8. **Optional Oracle Flash Accelerator 680 PCIe Cards:** 1. The first Oracle Flash Accelerator card must be installed in PCIe slot 2. 2. A second Oracle Flash Accelerator card must be installed in PCIe slot 3. 3. A third Oracle Flash Accelerator card must be installed in PCIe slot 9. 4. A fourth Oracle Flash Accelerator card must be installed in PCIe slot 1.	**Optional network cards:** 1. By default, each server node comes with a public network card installed in PCIe slot 5. 2. A second public network card can be installed in PCIe slot 4. 3. A third public network card can be installed in PCIe slot 8.
Installation intructions:	Install a Half Height PCIe Card	Install a Half Height PCIe Card	Install a Half Height PCIe Card

Copyright © 2025, Oracle and/or its affiliates.

Remove a Half Height PCIe Card

Before replacing or installing a PCIe card, refer to the card documentation for specific installation and cabling instructions.

1. Prepare the server for service.
   a. Power off the server.

      See Powering Down the Server.
   b. Disconnect the power cords from the power supplies.

      See Disconnect Cables From the Server.
   c. Extend the server to the maintenance position.

      See Extend the Server to the Maintenance Position.
   d. Attach an antistatic wrist strap.

      See Take Antistatic Measures.
   e. Remove the server top cover.

      See Remove the Server Top Cover.
2. Locate the PCIe card that you want to remove.

   > **Note**
   >
   > PCIe slots 1 through 4 are nonfunctional in single-processor systems.
3. If necessary, record where the PCIe cards are installed.
4. Unplug all data cables from the PCIe card [1].

   Note the cable connections so that it's easier to properly reconnect the cables.

   If it is difficult to disconnect the cables from the PCIe card when the card is inserted into the PCIe slot, consider performing the procedure in Step 5 before completing this step.
5. Rotate the PCIe card locking mechanism in to an upright position [1], and then lift up on the PCIe card to disengage it from the motherboard connectors [2].

Copyright © 2025, Oracle and/or its affiliates.

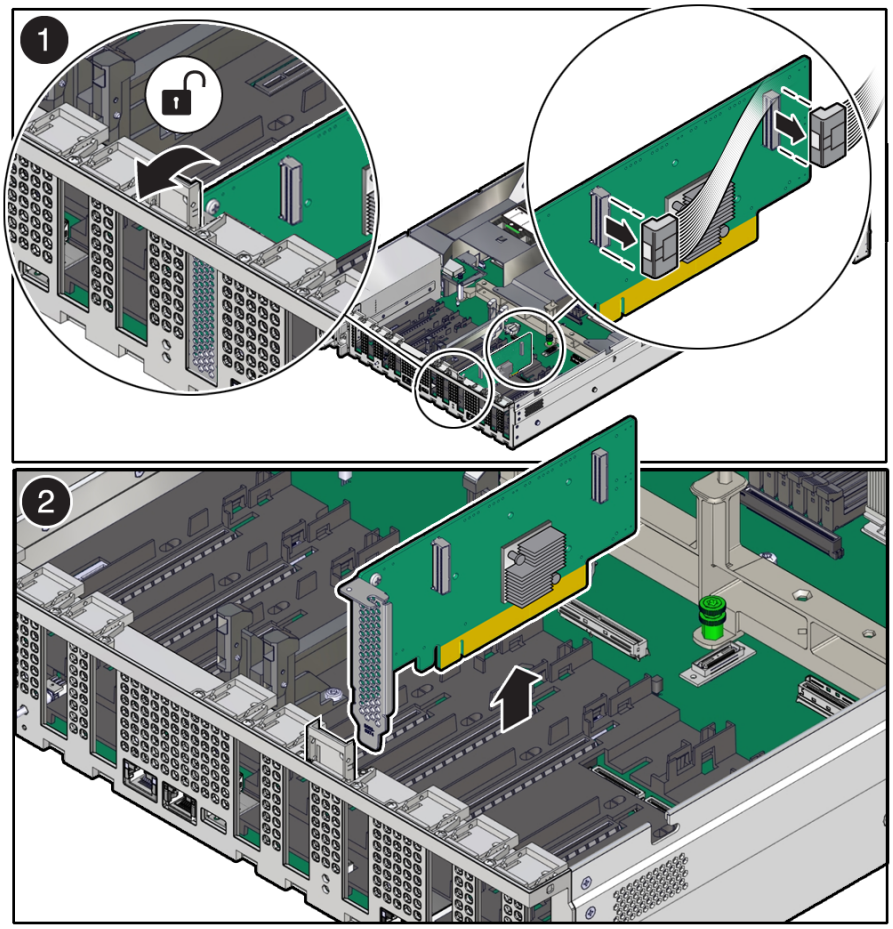

6. Place the PCIe card on an antistatic mat.

> **Caution**
>
> If you are not immediately inserting a replacement PCIe card into the empty slot, insert a PCIe filler panel in the slot to reduce the possibility of radiated electromagnetic interference (EMI).

Install a Half Height PCIe Card

1. Unpack the replacement PCIe card, and place it on an antistatic mat.

   Before replacing or installing a PCIe card, refer to the card documentation for specific installation and cabling instructions.

2. Locate the proper PCIe slot for the card you are replacing.

   PCIe slots 1 through 4 are nonfunctional in single-processor systems.

3. If necessary, remove the PCIe filler panel from the slot.

   Save this filler panel in case you need to remove the PCIe card from the system.

4. Insert the PCIe card into the correct slot [1], and rotate the PCIe locking mechanism downward to secure the PCIe card in place [2].

   You hear an audible click when the PCIe card is secured into the slot.

Copyright © 2025, Oracle and/or its affiliates.

If it is difficult to reconnect the cables to the PCIe card when the card is inserted into the PCIe slot, consider performing the procedure in Step 5 before completing this step.

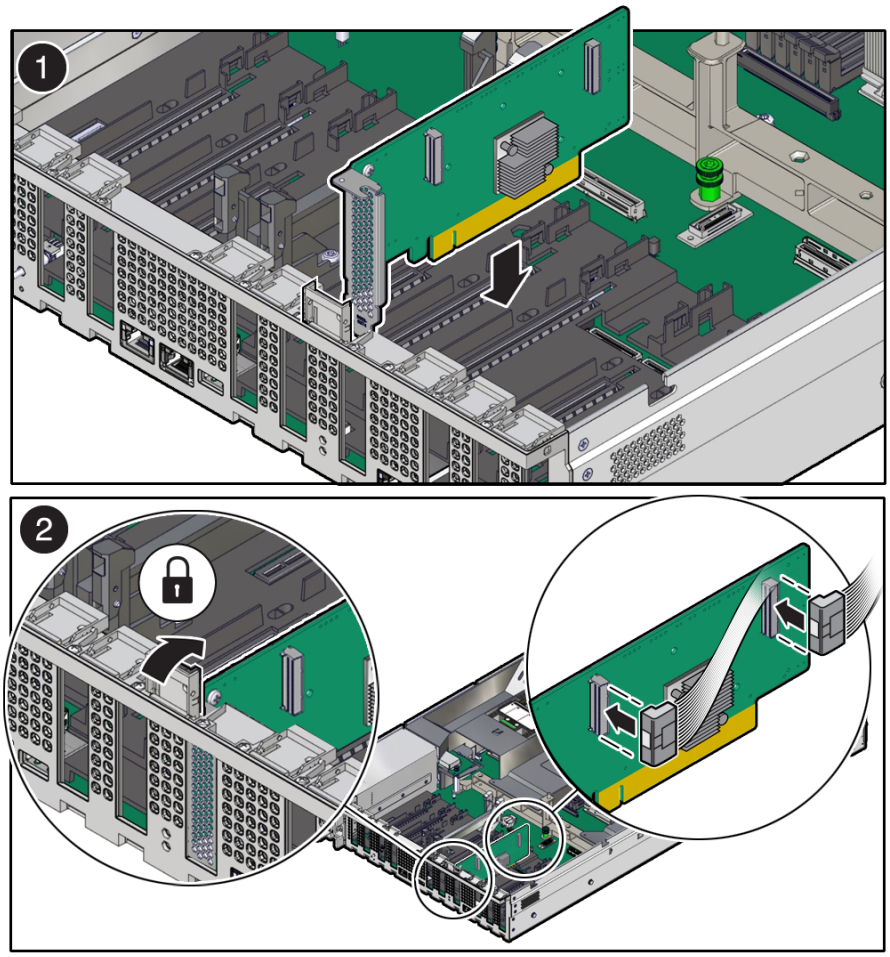

5. Reconnect any cables to the PCIe card that you unplugged during the removal procedure [2].
6. Return the server to operation.
   a. Install the server top cover.

      See Install the Server Top Cover.
   b. Return the server to the normal rack position.

      See Return the Server to the Normal Rack Position.
   c. Reconnect the power cords to the server power supplies, and power on the server.

      See Powering On Oracle Database Appliance.
   d. Verify that the System OK LED indicator is lit.
7. Use Oracle ILOM to clear any server PCIe card faults.

   If a PCIe card fault message in Oracle ILOM is not cleared under Open Problems, you must manually clear the fault using Oracle ILOM. refer to "Clear Faults for Undetected Replaced or Repaired Hardware Components" in the *Oracle ILOM User's Guide for System Monitoring and Diagnostics* at Oracle ILOM Documentation.
8. To determine whether additional steps are required to complete the installation of the PCIe card, refer to the server product notes for the type of PCIe card you installed.

Copyright © 2025, Oracle and/or its affiliates.

Servicing the Battery (CRU)

This section describes how to service the system battery.

The system battery is a replaceable component that requires you to power off the server before servicing.

The real-time clock (RTC) battery maintains system time when the server is powered off and a time server is unavailable. If the server does not maintain the correct time when the system is powered off and not connected to a network, replace the battery.

> ⚠ **Caution**
>
> These procedures require that you handle components that are sensitive to electrostatic discharge. This sensitivity can cause the components to fail. To avoid damage, ensure that you follow antistatic practices, as described in Electrostatic Discharge Safety.

> ⚠ **Caution**
>
> Ensure that all power is removed from the server before removing or installing the battery. You must disconnect the power cables from the system before performing this procedure.

- Remove the Battery
- Install the Battery

Remove the Battery

Battery connector types on the motherboard may vary.

1. Prepare the server for service.
   a. Power off the server.

      See Powering Down the Server.
   b. Disconnect the power cords from the power supplies.

      See Disconnect Cables From the Server.
   c. Extend the server into the maintenance position.

      See Extend the Server to the Maintenance Position.
   d. Attach an antistatic wrist strap to your wrist, and then to a metal area on the chassis.

      See Take Antistatic Measures.
   e. Remove the server top cover.

      See Remove the Server Top Cover.
2. Locate the battery and RTC battery retainer on the server motherboard.

Copyright © 2025, Oracle and/or its affiliates.

> **Note**
>
> Coin battery retainer types that are mounted in the RTC battery motherboard location may be different.

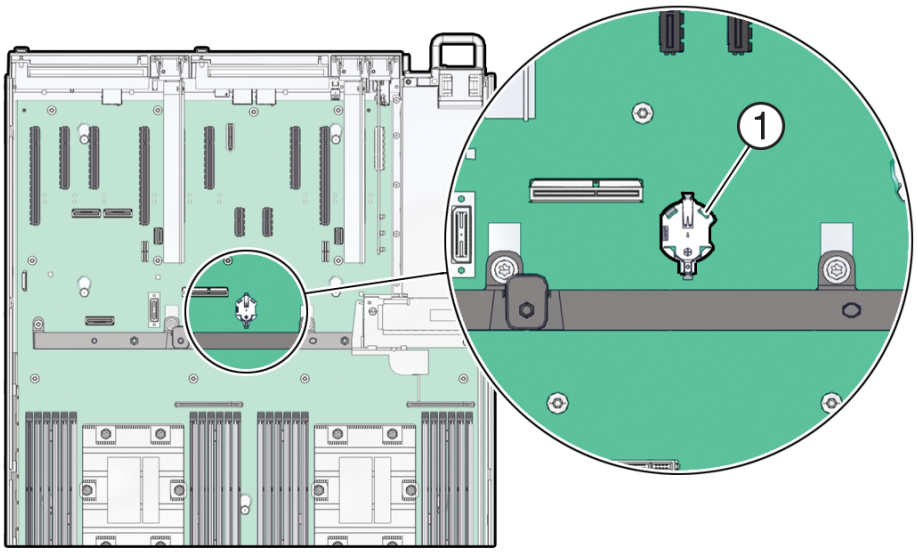

3. Remove the battery from the battery connector.

   There are serveral possible battery connector types used for the system as shown in the following illustration. Instructions for battery replacement can vary depending on the connector in your system.

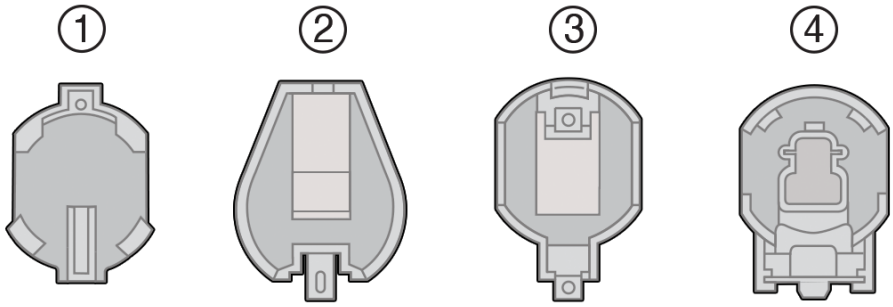

Callout	Description
1	796136-1 Top-Load Battery Connector (TE)
2	1093TR Top-Load Battery Connector
3	1070TR Top-Load Battery Connector
4	S8421 Top-Load Battery Connector

Do one of the following detailed instructions for the type of RTC battery retainer on the server motherboard.

- Remove the battery from the **796136-1 Top-Load Battery Connector (TE)** as follows:

Copyright © 2025, Oracle and/or its affiliates.

Each connector consists of a housing with a positive contact and a negative contact. The floor of the housing is embossed with a `+' to designate the positive contact. The connector features four lips for positive retention of the battery.

a. Support the connector by grasping the "positive" end of the connector with two fingers and then pushing the battery toward the positive end of the connector [1]. Slightly move the lips at the negative end of the connector away from the battery to dislodge it from the connector.

> **Note**
>
> **CAUTION!** The connector must be supported, otherwise damage to the soldered contacts could occur.

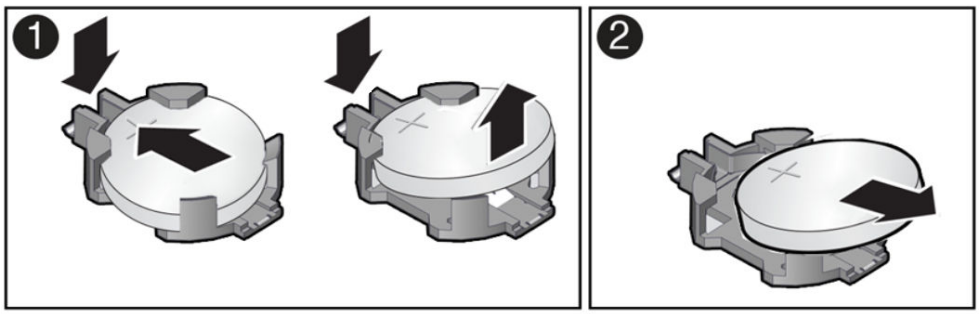

b. Once the batter has been dislodged, remove the battery from the connector [2].

- Remove the battery from the **1093TR Top-Load Battery Connector** as follows:

  a. Using your fingers or a non-conducting stylus, gently pry up the edge of the battery from underneath the negative spring tab just enough to dislodge it from the connector.

  b. Then slide the battery out from under the negative spring tab and away from the connector.

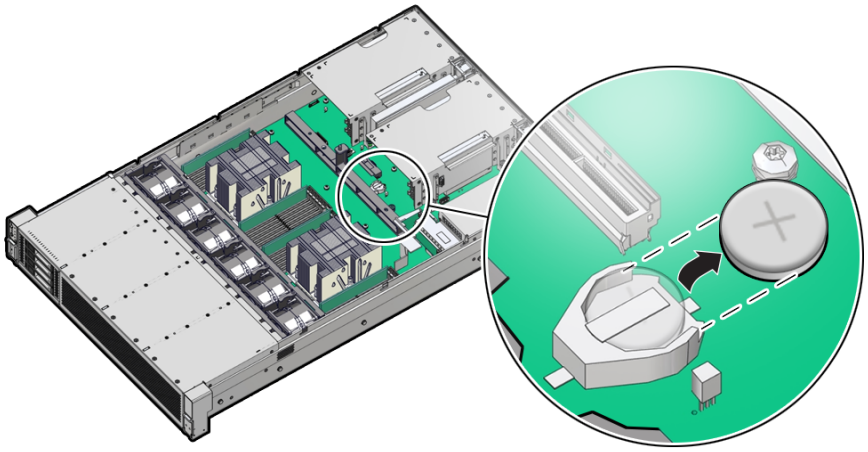

- Remove the battery from **other Top-Load Battery Connectors** as follows.

  a. To dislodge the battery from the retainer, place your finger under the side of the battery nearest the rear of the server.

  b. Gently lift the battery up and out of the connector.

Copyright © 2025, Oracle and/or its affiliates.

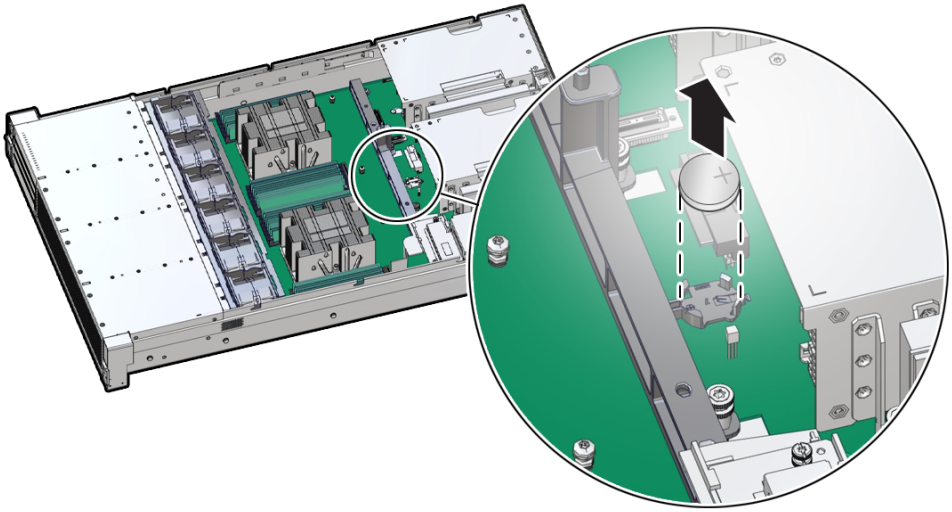

Install the Battery

1. Unpack the replacement RTC battery.
2. Press the new battery into the battery retainer.
   - Install the battery into the **796136-1 Top-Load Battery (TE) Connector** as follows: Each connector consists of a housing with a positive contact and a negative contact. The floor of the housing is embossed with a `+' to designate the positive contact. The connector features four lips for positive retention of the battery.
     a. Support the connector by grasping the positive end of the connector [1]. Then, while holding the battery at an angle with the positive '+' side facing up, slide the battery under the lips at the positive end of the connector [1].

     > **Note**
     >
     > **CAUTION!** The connector must be supported, otherwise damage to the soldered contacts could occur.

     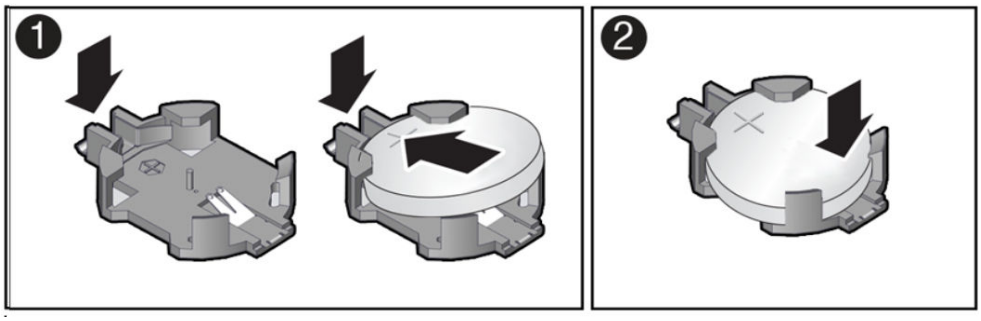

     b. Gently push the battery onto the floor of the connector housing until the battery is fully seated [2]. There should be an audible "snap."
   - Install the battery into the **1093TR Top-Load Battery Connector** as follows:
     a. Gently slide the battery under the negative spring tab of the connector.

Copyright © 2025, Oracle and/or its affiliates.

b. Slide the battery to the back of the connector and push the battery into the connector housing until the battery is fully seated. There should be an audible “snap.”

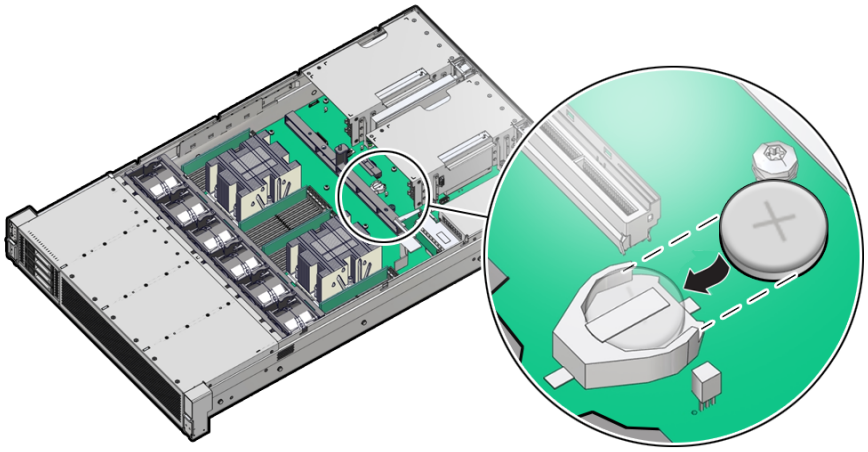

- Install the battery into the **other Top-Load Battery Connectors** as follows:
  a. While holding the battery at an angle with the positive ‘+’ side facing up, slide the battery under the lips at the back of the connector
  b. Then gently push the battery onto the floor of the housing until the battery is fully seated. There should be an audible “snap.”

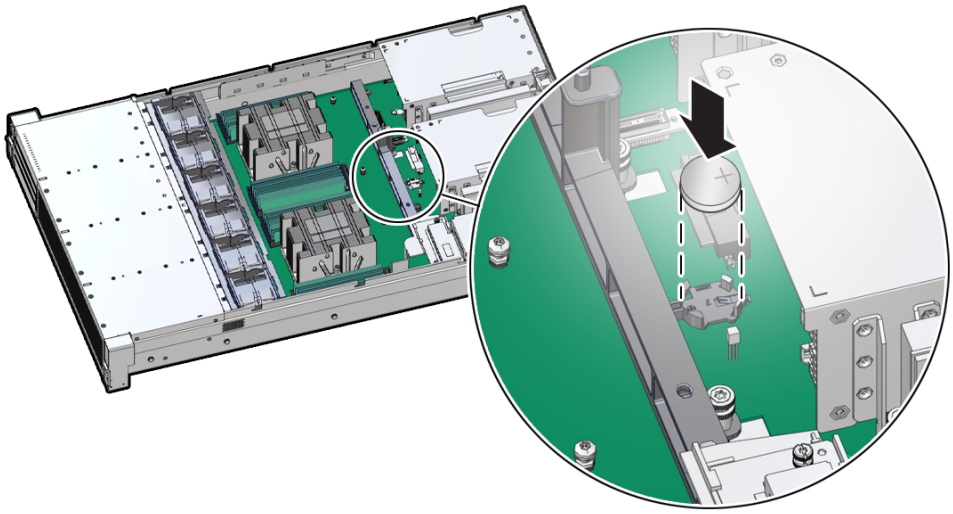

3. Return the server to operation.
   a. Install the server top cover.

      See Install the Server Top Cover.
   b. Return the server to the normal rack position.

      See Return the Server to the Normal Rack Position.
   c. Reconnect the power cords to the server power supplies, and power on the server.

      See Powering On Oracle Database Appliance.
   d. Verify that the System OK LED indicator is lit.

Copyright © 2025, Oracle and/or its affiliates.

> **Note**
>
> If the service processor is configured to synchronize with a network time server using the Network Time Protocol (NTP), the Oracle ILOM SP clock is reset as soon as the server is powered on and connected to the network. Otherwise, proceed to the next step.

4. If the service processor is not configured to use NTP, you must do one of the following:
   - Reset the Oracle ILOM clock using Oracle ILOM CLI or web interface.

     Refer to Oracle ILOM Documentation.
   - Use the BIOS Setup Utility to reprogram the host clock.

     See BIOS Setup Utility Menus.

Copyright © 2025, Oracle and/or its affiliates.

5
Servicing FRUs

Perform tasks for servicing field-replaceable units (FRUs) for the Oracle Database Appliance that require you to power off the system and/or server node.

When servicing FRU components, the server node and/or system must be powered down and the AC power cords disconnected.

> **Note**
>
> Only authorized Oracle Service personnel can service FRU components.

- Servicing Processors (FRU)
  Perform tasks described in this section to service processors.
- Servicing the Fan Tray (FRU)
  Perform tasks in this section to service the fan tray.
- Servicing the Disk Backplane (FRU)
  Perform tasks in this section to service the disk backplane.
- Servicing the Front LED Indicator Module (FRU)
  Perform tasks in this section to service the front LED indicator module.
- Servicing the PCIe Slot Flyover Cable (FRU)
  Perform tasks in this section to service the PCIe Slot Flyover Cable.
- Servicing the Motherboard Assembly (FRU)
  This section describes how to service the motherboard assembly.
- Component Fault Management
  Perform component fault management on Oracle Database Appliance systems.

Servicing Processors (FRU)

Perform tasks described in this section to service processors.

Processors are replaceable components that require you to power off the server before servicing.

> **Caution**
>
> Ensure that all power is removed from the server before removing or installing a processor. You must disconnect the power cables from the system before performing these procedures.

Copyright © 2025, Oracle and/or its affiliates.

Caution

These procedures require that you handle components that are sensitive to electrostatic discharge. This sensitivity can cause the component to fail. To avoid damage, ensure that you follow electrostatic discharge safety measures and antistatic practices. See Electrostatic Discharge Safety.

Note

On single-processor systems, processor socket 1 (P1) is shipped without a heatsink and with an External Cap. To protect the delicate processor socket pins, do not remove the External Cap that was installed on the motherboard.

- Processor Overview
- Identify and Remove a Processor
- Install a Processor

Processor Overview

Socket components in the processor assembly have a pin 1 indicator to aid in assembly.

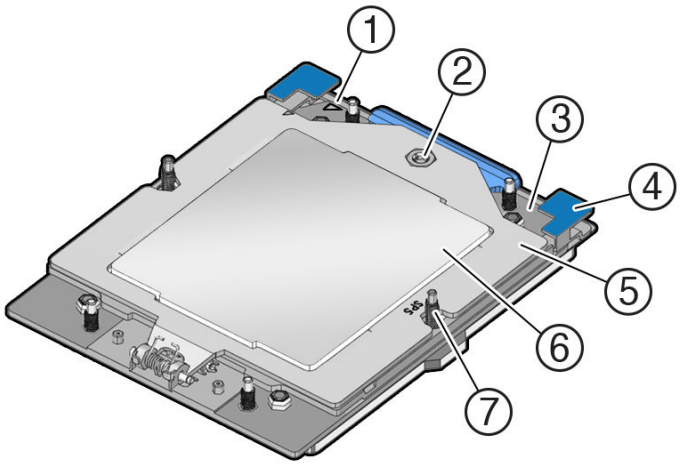

Callout	Description
1	Pin 1 orientation
2	Force Frame Retention Screw (captive)
3	Rail Frame (socket stiffener frame)
4	Release Tabs (2x)
5	Force Frame (retention frame)
6	Processor Package (carrier frame holding preinstalled processor)
7	Heatsink Attachment Studs (6x)

Copyright © 2025, Oracle and/or its affiliates.

Identify and Remove a Processor

- Use ESD gloves (not latex or vinyl), if possible, when handling the processor.
- Obtain a Torx T20 screwdriver for processor and heatsink removal.
- Obtain the materials required to remove the old thermal interface material (TIM).
  - Isopropyl alcohol wipes (included with FRU kit)
  - Techwipes or similar low-lint and low-abrasion wipe
  - Isopropyl alcohol (90% or above recommended)

> ⚠ **Caution**
>
> Failure to remove/replace the old TIM can result in processor overheating.

- Be careful not to touch the processor socket pins.

> ⚠ **Caution**
>
> The processor socket pins are very fragile. A light touch can bend the processor socket pins beyond repair.

- Replacement processors come preinstalled on a special carrier to ensure safe handling. Never remove the processor from its carrier.

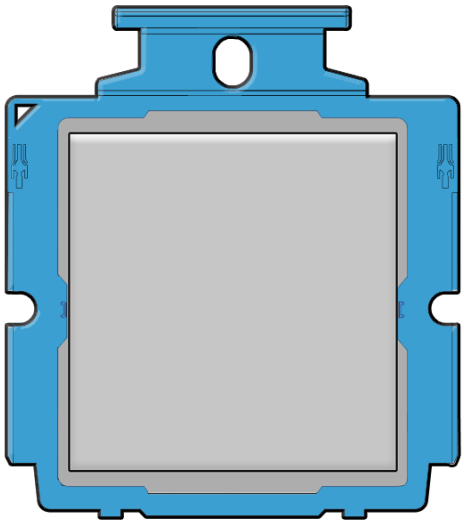

- On a two processor system, if you remove a processor for replacement do not attempt to operate the system with a single processor as the server might overheat due to improper airflow. A two processor system requires both processors and their heatsinks installed to operate properly.

1. Prepare the server for service.
   a. Power off the server.

Copyright © 2025, Oracle and/or its affiliates.

See Powering Down the Server.

b. Disconnect the power cords from the power supplies.

See Disconnect Cables From the Server.

c. Extend the server to the maintenance position.

See Extend the Server to the Maintenance Position.

d. Attach an antistatic wrist strap to your wrist, and then to a metal area on the chassis.

See Take Antistatic Measures.

e. Remove the server top cover.

See Remove the Server Top Cover.

f. Remove the air baffle.

See Remove the Air Baffle.

2. Identify the location of the failed processor by pressing the Fault Remind button on the motherboard.

The following illustration identifies the location of the Fault Remind button and processor fault LEDs.

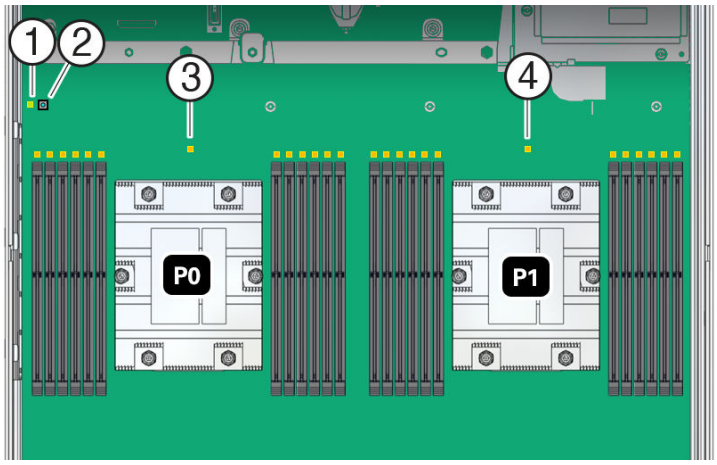

Callout	Description
1	Fault Remind circuit power LED - green
2	Fault Remind button
3	Processor 0 fault LED - amber
4	Processor 1 fault LED - amber

When you press the Fault Remind button, the processor fault LED for the failed processor illuminates.

- If the processor fault LED is off, the processor is operating properly.
- If the processor fault LED is illuminated (amber), the processor failed and you must replace it.

Copyright © 2025, Oracle and/or its affiliates.

> **Note**
>
> When you press the Fault Remind button, an LED located next to the Fault Remind button illuminates green, indicating that there is sufficient voltage in the fault remind circuit to illuminate any fault LEDs that were illuminated due to a failure. If this LED fails to illuminate when you press the Fault Remind button, it is likely that the capacitor powering the fault remind circuit lost its charge. This can happen if you press the Fault Remind button for a long time with fault LEDs illuminated, or if power was removed from the server for more than 15 minutes.

3. Using a Torx T20 screwdriver, loosen the six captive screws that secure the processor heatsink to the socket.

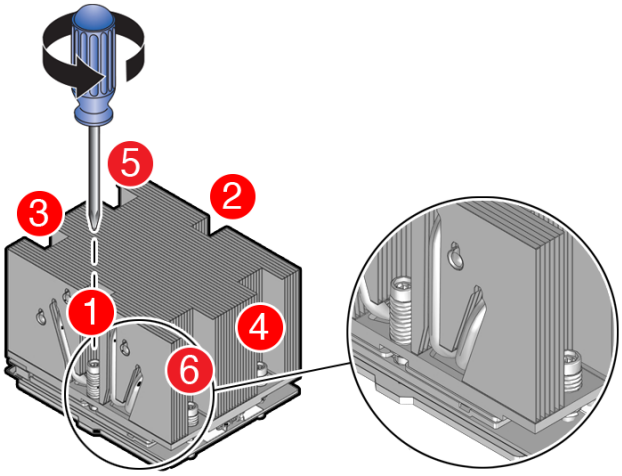

Loosen in reverse order 6-1, then go back and disengage completely.

a. Loosen captive screws 6,5,4,3,2,1 in the order shown in the illustration.

b. Disengage captive screws 6,5,4,3,2,1 in the order shown in the illustration.

A label on top of the heatsink provides additional detail.

Copyright © 2025, Oracle and/or its affiliates.

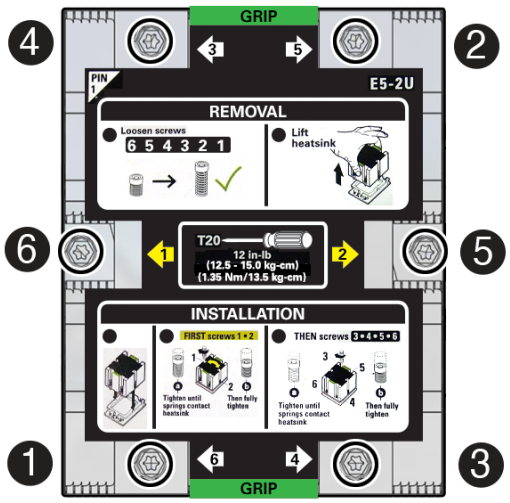

4. Lift the heatsink from the socket.

> **Caution**
>
> There is a thin layer of thermal grease between the heatsink and the processor. Do not allow the thermal grease to contaminate the workspace or other components.

> **Note**
>
> Always grip the heatsink along the axis of the fins to prevent damage.

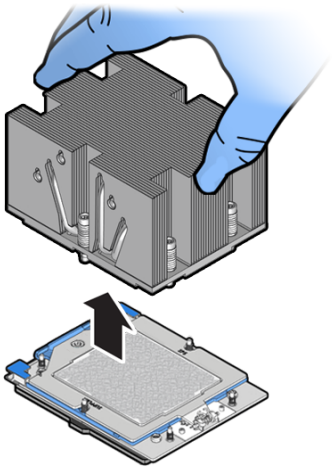

5. Place the heatsink, facing up, on a work surface.

Copyright © 2025, Oracle and/or its affiliates.

6. Wipe the heatsink with a dry wipe to remove most of the thermal grease. Then clean off the thermal interface material (TIM) using the supplied alcohol wipes until there is no grease remaining.

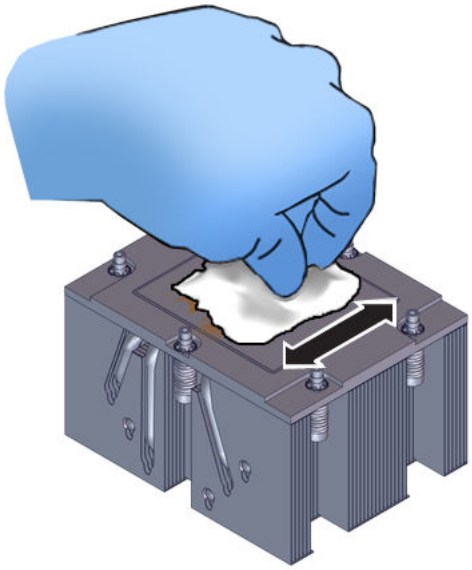

> ⚠ **Caution**
>
> Failure to clean thermal grease from the heatsink could result in the accidental contamination of the processor socket or other components. Be careful not to get the grease on your fingers, as this could result in contamination of components.

7. Wipe the top of the processor with a dry wipe to remove most of the thermal grease.

> ⚠ **Caution**
>
> If thermal grease falls into the socket, there is no way to remove it without damaging the socket. Remove thermal grease from the processor and any on the socket assembly before removing the carrier with the processor.

Copyright © 2025, Oracle and/or its affiliates.

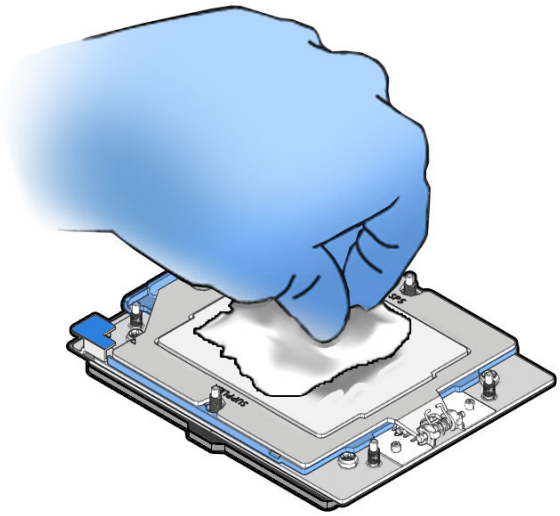

8. Unscrew the socket Force Frame.

   Using a Torx T20 screwdriver, loosen the captive Force Frame Retention Screw that secures the Force Frame to the socket.

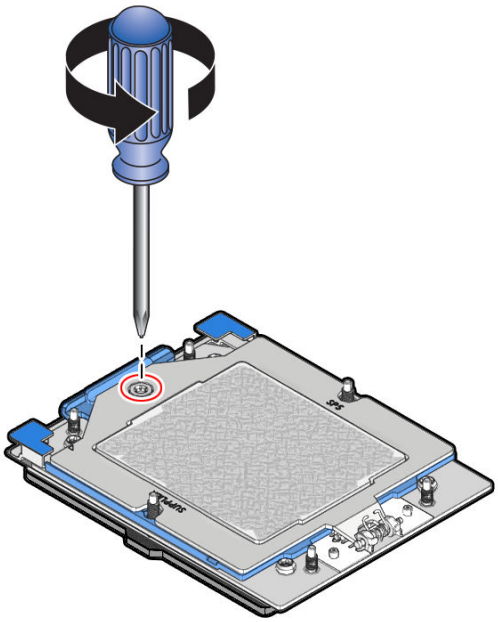

9. Lift the Force Frame to the open position.

   Apply counter-pressure to the Force Frame when opening.

Copyright © 2025, Oracle and/or its affiliates.

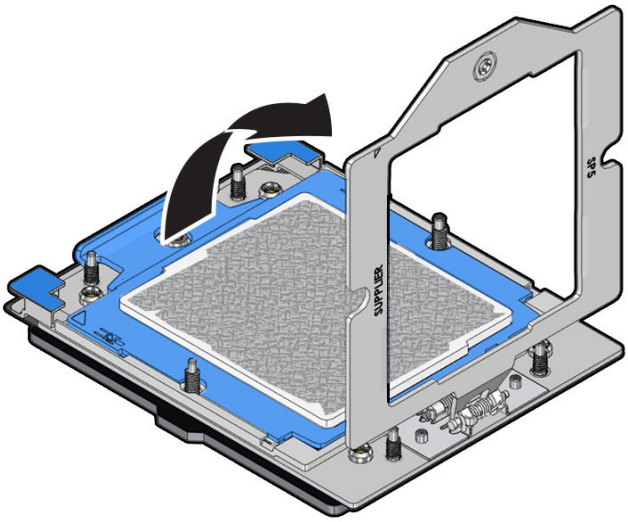

10. Open the Rail Frame.

    Squeeze the blue tabs to release the Rail Frame.

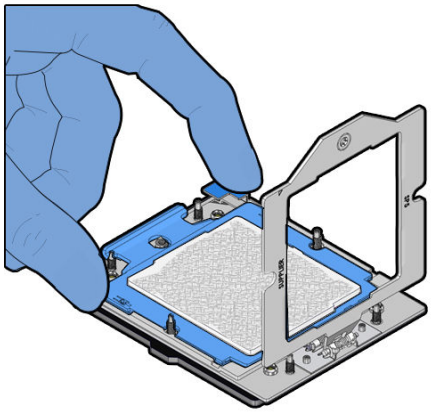

11. Lift the Rail Frame and slide out the carrier frame package.

    Lift the Rail Frame by holding its lift tabs and rotating the Rail Frame to its near vertical position.

Copyright © 2025, Oracle and/or its affiliates.

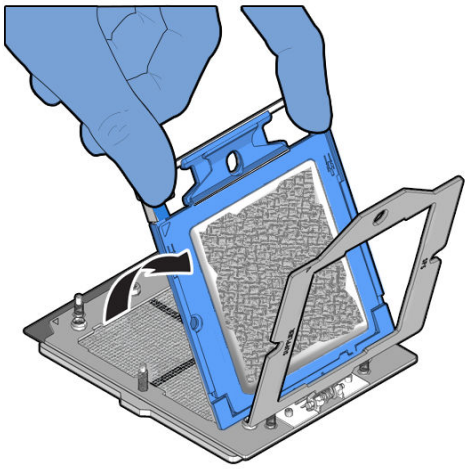

> **Note**
>
> The Rail Frame is spring-loaded. Hold on to the Rail Frame as it releases from the socket frame, when rotating it to the vertical position.

Slide the carrier frame package holding the processor out.

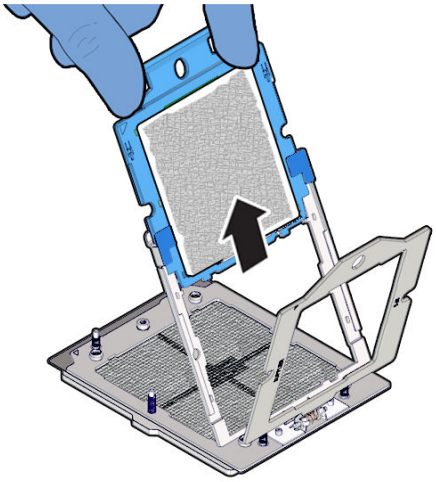

12. Place the carrier frame package in an appropriate tray.

Copyright © 2025, Oracle and/or its affiliates.

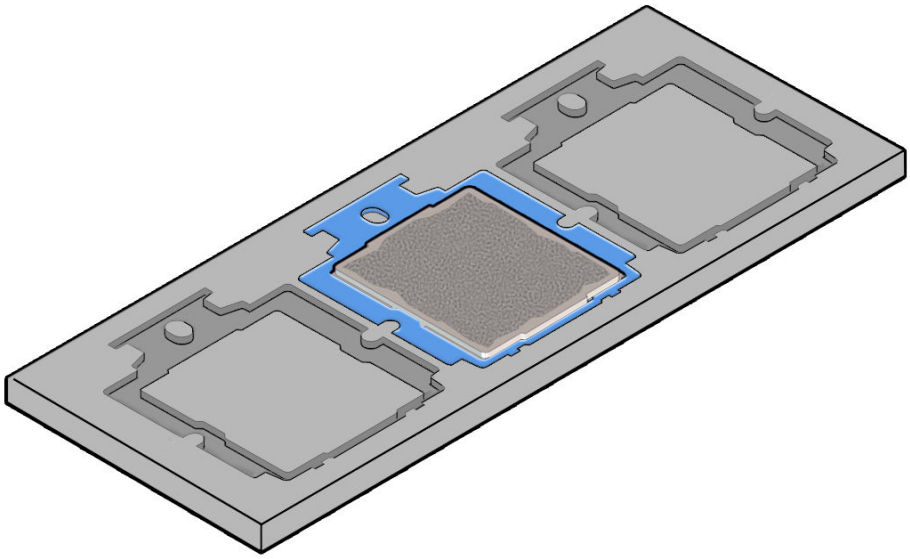

13. Wipe the Force Frame (retention frame) with a dry wipe followed by a wipe with a small amount of isopropyl alcohol.

> ⚠ **Caution**
>
> If thermal grease falls into the socket, there is no way to remove it without damaging the socket.

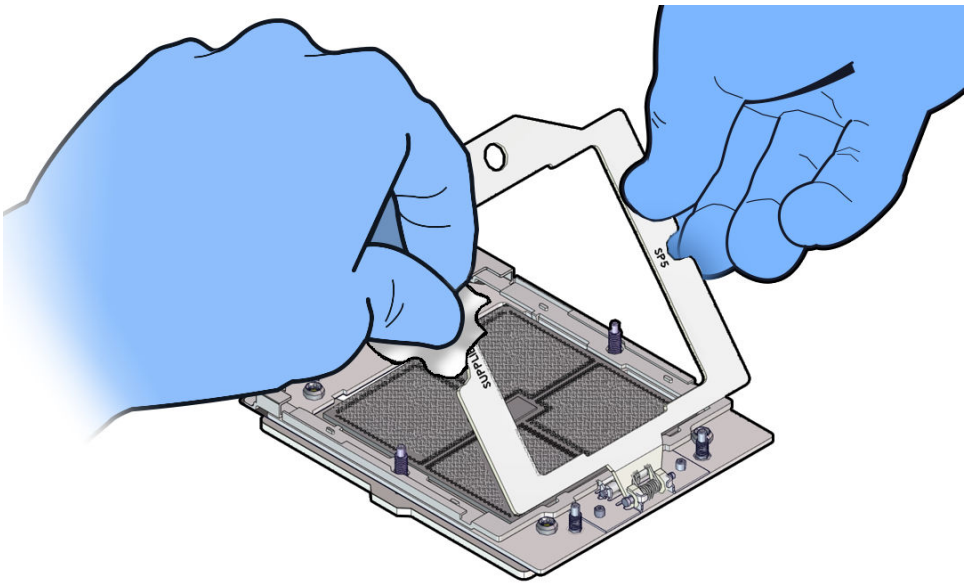

14. Clean off any remaining thermal interface material (TIM) from the processor using the supplied alcohol wipes.

Copyright © 2025, Oracle and/or its affiliates.

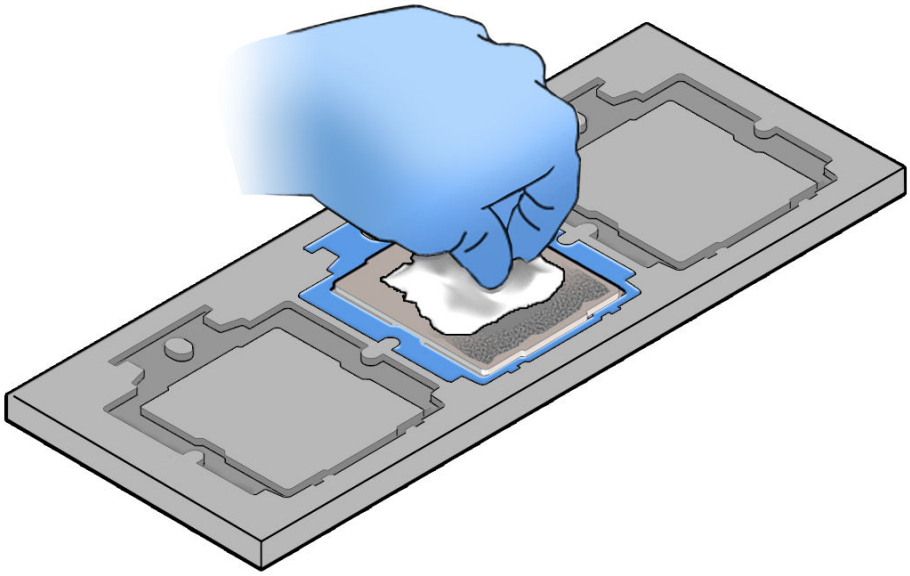

Install a Processor

- Use ESD gloves (not latex or vinyl), if possible, when handling the processor.
- Obtain a torque driver set to 12 in-lb (inch-pound or 1.35 Nm/13.5 kg-cm) force with a T20 Torx bit for processor and heatsink installation.
- All of the old thermal interface material (TIM) should have been removed. Failure to remove/replace the old TIM can result in processor overheating.
- Be careful not to touch the processor socket pins.

> ⚠ **Caution**
>
> The processor socket pins are very fragile. A light touch can bend the processor socket pins beyond repair.

- If you are replacing a processor, ensure that the replacement processor is identical to the processor that was removed. A list of supported processors can be found in the *Owner's Guide*.

1. Attach an antistatic wrist strap to your wrist, and then to a metal area on the chassis.

   See Take Antistatic Measures.

2. Open the new processor package.

   Ensure that the replacement processor is identical to the processor that was removed.

   The processor comes preinstalled on a special carrier to ensure safe handling. **Do not** remove the processor from its carrier.

Copyright © 2025, Oracle and/or its affiliates.

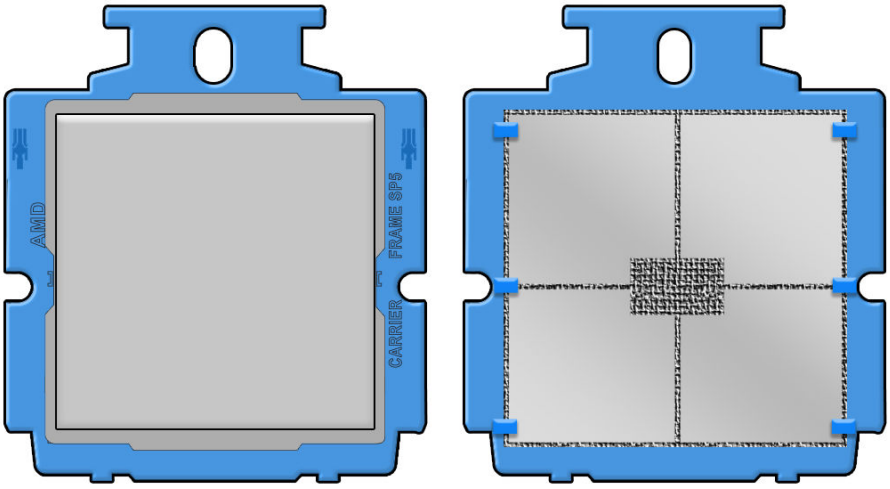

Note the orientation and correct handling of the processor package.

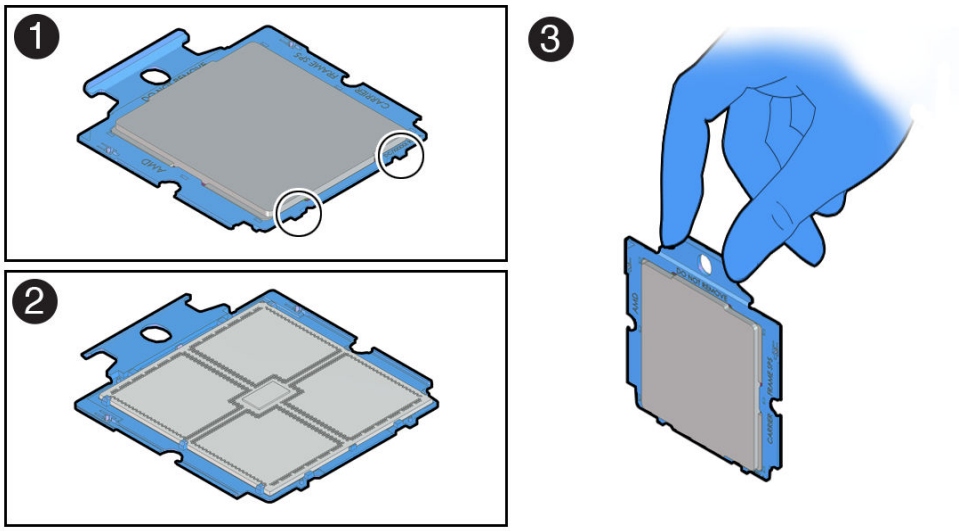

Callout	Description
1	Top of processor carrier (insertion tabs are circled)
2	Bottom of processor carrier (contacts the socket)
3	Use of the processor carrier handle

3. Holding the processor carrier by its handle, slide it into the socket Rail Frame.

Copyright © 2025, Oracle and/or its affiliates.

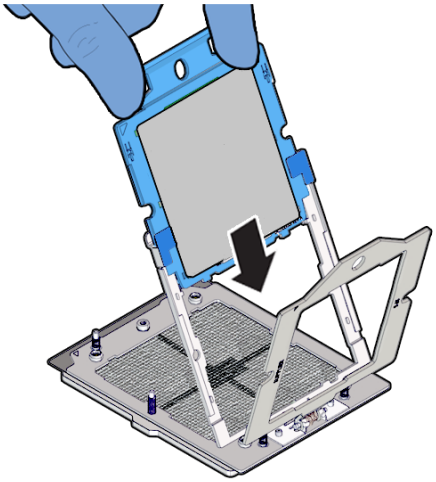

Ensure that the two insertion tabs at the bottom of the processor carrier are inserted into the tab slots in the Rail Frame.

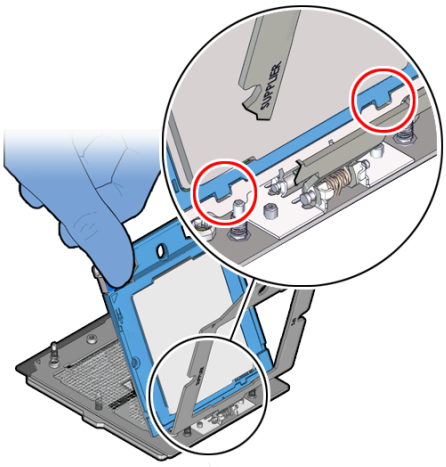

4. Grasping the Rail Frame edge [1], rotate the Rail Frame down to the closed position [2].

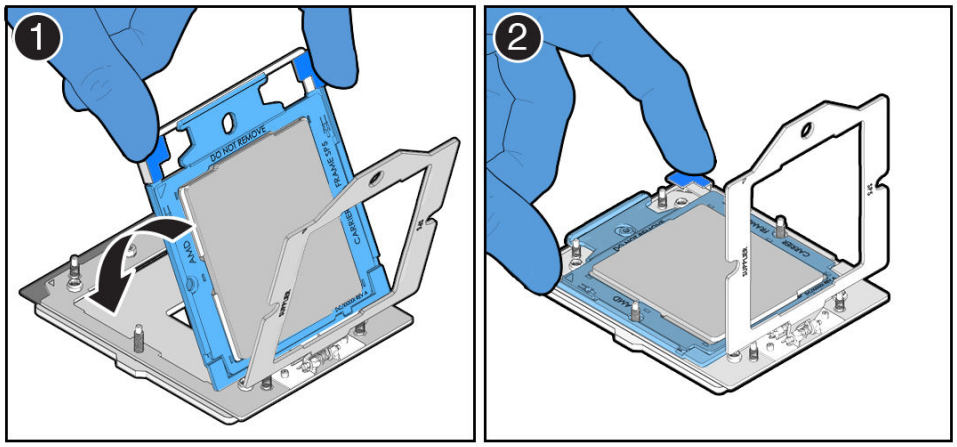

Copyright © 2025, Oracle and/or its affiliates.

5. Rotate the Force Frame down to its closed position on the socket stiffener frame.

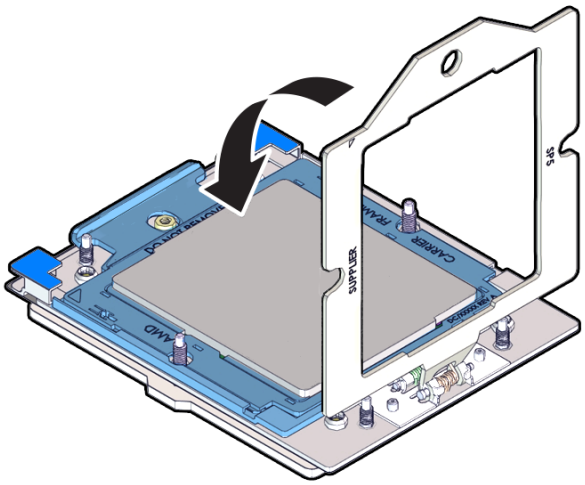

6. Using a torque driver set to 12 in-lb (inch-pound) or 1.35 Nm/13.5 kg-cm force with a Torx T20 bit, fully tighten the captive screw that secures the Force Frame to the socket stiffener frame.

   Use one hand to hold down the spring-loaded Force Frame until the screw is tightened.

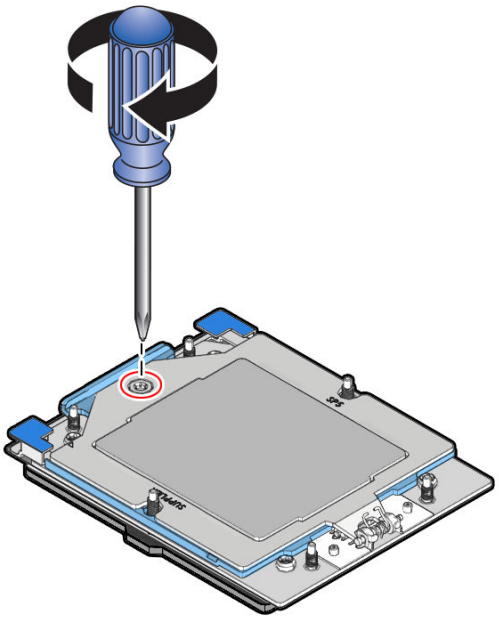

7. Apply the thermal interface material (TIM).

   Using the supplied syringe, evenly apply all of the TIM in an "S" pattern centered on the top of the processor.
   Keep the "S" pattern inside a half inch of the processor edge so the TIM doesn't overflow and contaminate other parts of the processor housing.

Copyright © 2025, Oracle and/or its affiliates.

> **Note**
>
> Do not distribute the TIM. The pressure of the heatsink will do so for you when you install the heatsink.

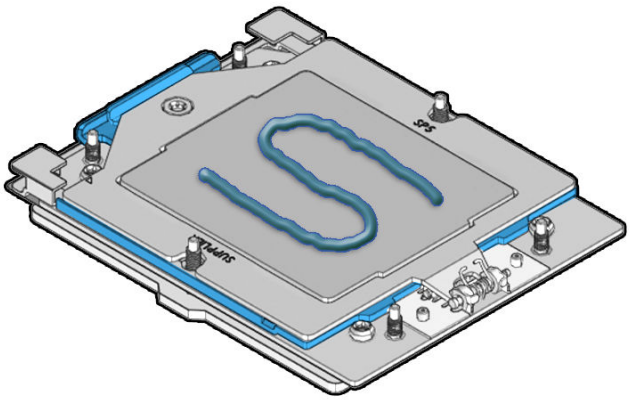

8. Carefully lower the heatsink on to the six socket heatsink attachment studs.

   The heatsink is keyed to go on only one way. The captive screws that attach to the pin 1 end of the socket stiffener frame are closer together than the captive screws that attach at the opposite end of the stiffener frame.

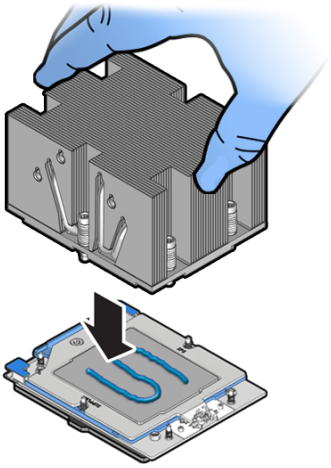

9. Using torque driver set to 12 in-lb (13.5 kg-cm) to 13.02 in-lb (15.0 kg-cm) force with a Torx T20 bit, tighten the heatsink module to the socket as shown in the following illustration. Note that screws 1 and 2 are slightly longer than screws 3, 4, 5, and 6.

Copyright © 2025, Oracle and/or its affiliates.

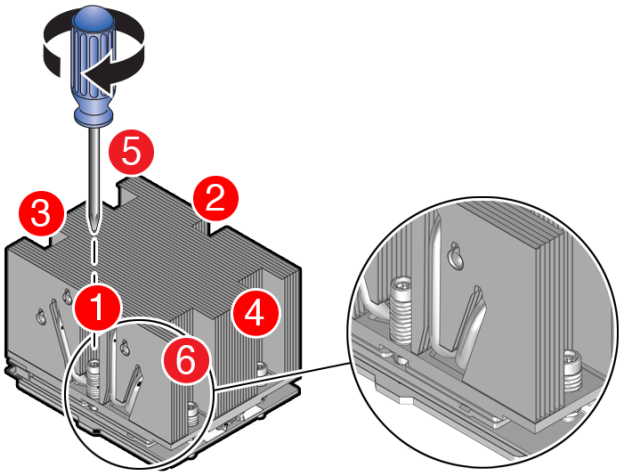

There is a label on top of the heatsink that shows additional detail.

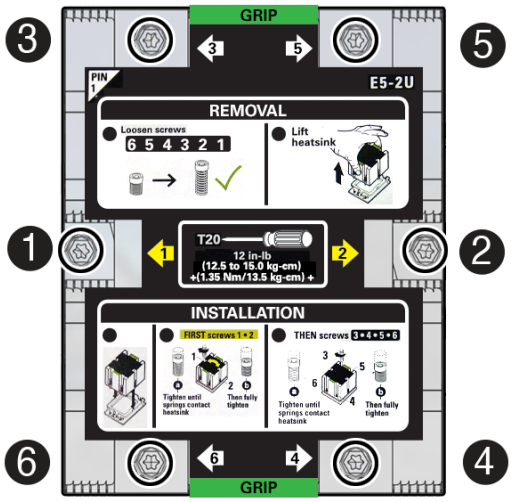

10. Return the server to operation.
    a. Install the air baffle.

       See Install the Air Baffle.
    b. Install the server top cover.

       See Install the Server Top Cover.
    c. Return the server to the normal rack position.

       See Return the Server to the Normal Rack Position.
    d. Reconnect the power cords to the power supplies, and power on the server.

       See Powering On Oracle Database Appliance.
    e. Verify that the power supply AC OK LED is lit.
11. Use Oracle ILOM to clear server processor faults.

Copyright © 2025, Oracle and/or its affiliates.

a. To show server faults: log in to the server as root using the Oracle ILOM CLI, and type the following command to list all known faults on the server:

-> `show /SP/faultmgmt`

The server lists all known faults, for example:

```
-> show /SP/faultmgmt
  Targets:
      shell
      0 (/SYS/MB/P0)
  Properties:
  Commands:
      cd
      show
```

Alternatively, log in to the Oracle ILOM service processor from the Oracle ILOM Fault Management Shell and issue the `fmadm faulty` command. For more information about how to use the Oracle ILOM Fault Management Shell and supported commands, see the *Oracle ILOM User's Guide for System Monitoring and Diagnostics* at Oracle ILOM Documentation.

b. To clear the fault identified in previous step, type the following command: set command

-> `set /SYS/MB/P0 clear_fault_action=true`

For example:

```
-> set /SYS/MB/P0 clear_fault_action=true
Are you sure you want to clear /SYS/MB/P0 (y/n)? y
Set 'clear_fault_action' to 'true'
```

Alternatively, to clear all known faults in the server, log in to the Oracle ILOM service processor from the Oracle ILOM Fault Management Shell and issue the `fmadm repair` command.

For more information about how to use the Oracle ILOM Fault Management Shell and supported commands, see the *Oracle ILOM User's Guide for System Monitoring and Diagnostics* at Oracle ILOM Documentation.

Servicing the Fan Tray (FRU)

Perform tasks in this section to service the fan tray.

The fan tray might need to be removed when servicing the disk backplane and motherboard assembly. Removing the fan tray requires you to power off the server.

> ⚠ **Caution**
>
> Ensure that all power is removed from the server before removing or installing the disk backplane. You must disconnect the power cables before performing this procedure.

Copyright © 2025, Oracle and/or its affiliates.

> **Caution**
>
> These procedures require that you handle components that are sensitive to electrostatic discharge. This sensitivity can cause the component to fail. To avoid damage, ensure that you follow electrostatic discharge safety measures and antistatic practices. See Electrostatic Discharge Safety.

- Remove the Fan Tray
- Install the Fan Tray

Remove the Fan Tray

Perform this procedure only when servicing disk backplane and motherboard assembly replaceable components.

1. Remove all fan modules from the fan tray.

   See Remove a Fan Module.

2. Remove the air baffle.

   See Remove the Air Baffle.

3. Using a Torx T25 screwdriver, loosen the five spring-mounted screws that secure the fan tray to the server chassis.

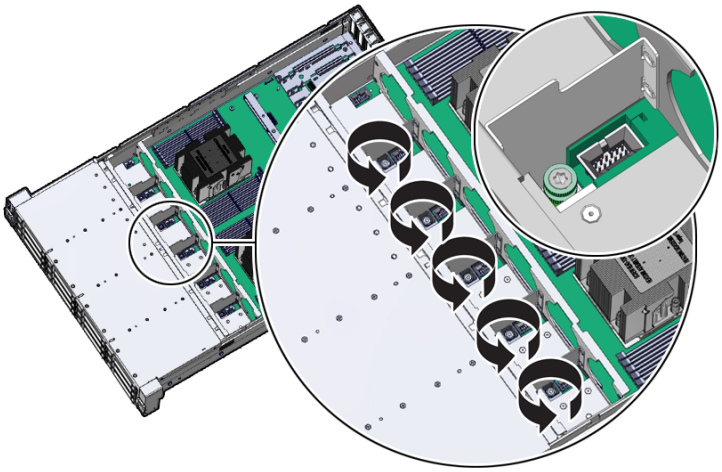

4. When removing the fan tray, slightly tilt the fan tray to the left to decompress the cables, before removal.

Copyright © 2025, Oracle and/or its affiliates.

Ensure all motherboard cables are clear of the fan tray and fan tray gasket.

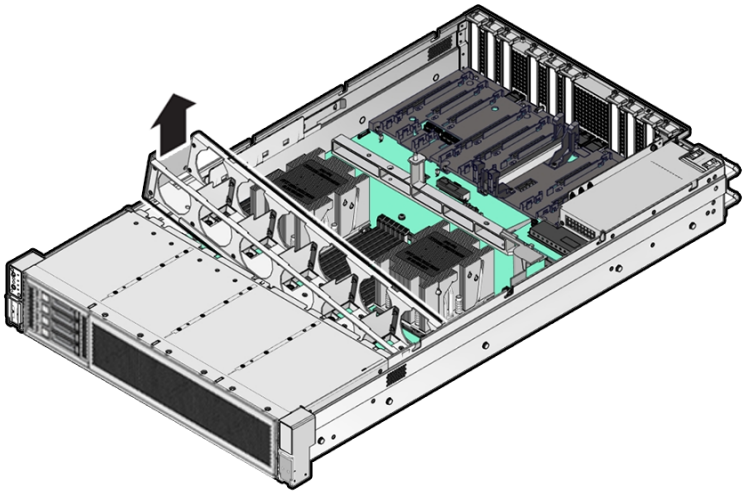

5. Lift the fan tray from the server.

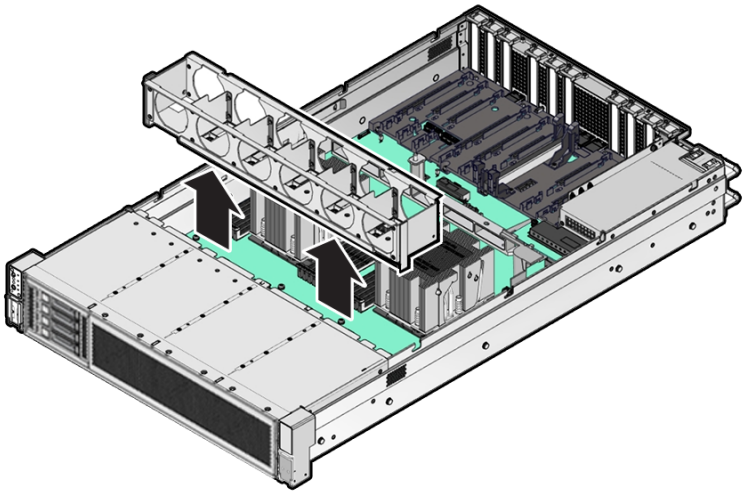

6. Continue with the next step in the service procedure.

Install the Fan Tray

Perform this procedure only when servicing disk backplane and motherboard assembly replaceable components.

1. Lower the fan tray into the server.

Copyright © 2025, Oracle and/or its affiliates.

Ensure all motherboard cables are clear of the fan tray and fan tray gasket.

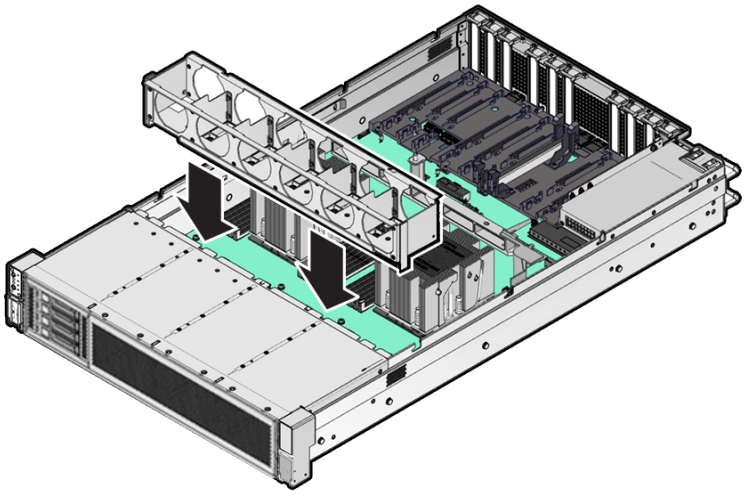

2. When installing the fan tray, the fan tray should first be slightly tilted to the left to compress the cables, before the operation.

   Ensure all motherboard cables are clear of the fan tray and fan tray gasket.

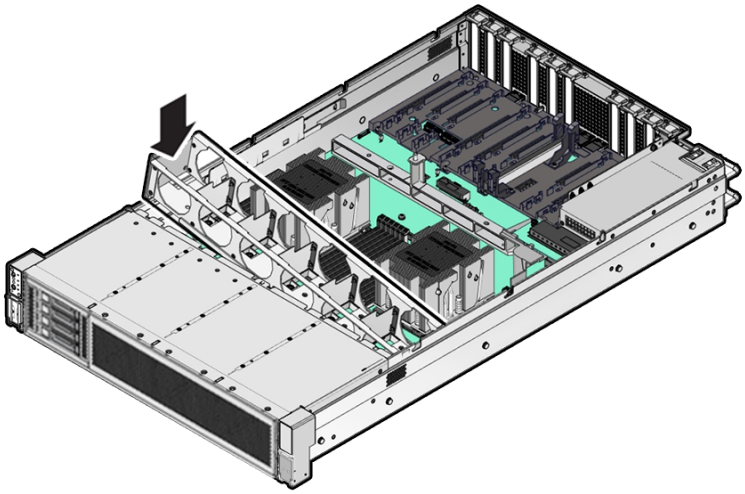

3. Using a Torx T25 screwdriver, tighten the five spring-mounted screws that secure the fan tray to the server chassis.

Copyright © 2025, Oracle and/or its affiliates.

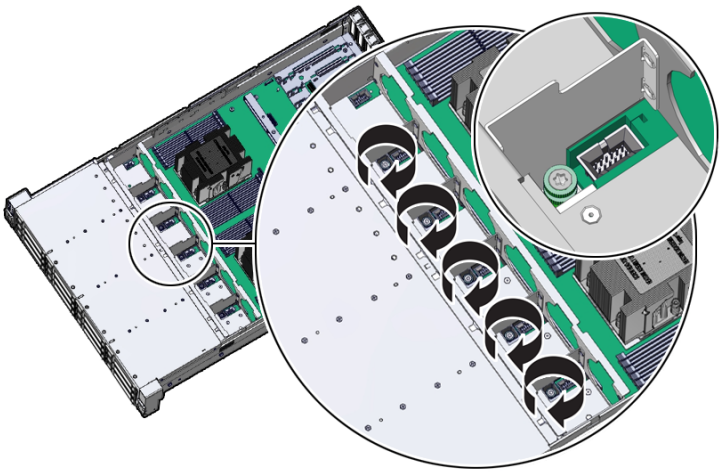

4. Install the fan modules into the fan tray.

   See Install a Fan Module.

5. Install the air baffle.

   See Install the Air Baffle

6. Continue with the next step in the service procedure.

Servicing the Disk Backplane (FRU)

Perform tasks in this section to service the disk backplane.

The disk backplane (DBP) is a replaceable component that requires you to power off the server before servicing.

> ⚠ **Caution**
>
> Ensure that all power is removed from the server before removing or installing the disk backplane. You must disconnect the power cables before performing this procedure.

> ⚠ **Caution**
>
> These procedures require that you handle components that are sensitive to electrostatic discharge. This sensitivity can cause the component to fail. To avoid damage, ensure that you follow electrostatic discharge safety measures and antistatic practices. See Electrostatic Discharge Safety.

- Remove the 4-Drive Backplane
- Install the 4-Drive Backplane
- Remove a Disk Backplane Cable
- Install a Disk Backplane Cable

Copyright © 2025, Oracle and/or its affiliates.

Remove the 4-Drive Backplane

To remove the storage drive cage and 4-Drive disk backplane:

1. Prepare the server for service.
   a. Power off the server.

      See Powering Down the Server.
   b. Disconnect the power cords from the power supplies.

      See Disconnect Cables From the Server.
   c. Extend the server into the maintenance position.

      See Extend the Server to the Maintenance Position.
   d. Attach an antistatic wrist strap to your wrist, and then to a metal area on the chassis.

      See Take Antistatic Measures.
   e. Remove the server top cover.

      See Remove the Server Top Cover.
   f. Remove the fan modules and tray from the server.

      See Remove the Fan Tray.
2. Remove all NVMe storage drives from the server front panel and set them aside on an antistatic mat.

   To remove a drive, push the latch release button on the front of the drive to open the drive latch [1], grasp the latch, and pull the drive out of the drive slot [2]. Be sure to label the drives so you can later reinstall them into the same slots from which they were removed.

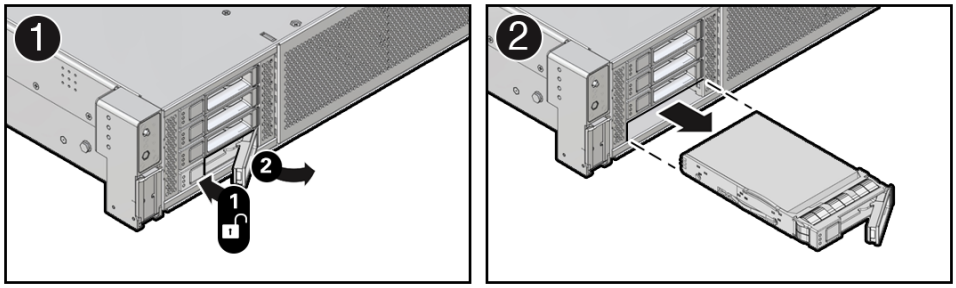

3. Disconnect the Retimer cable from the Oracle Retimer card installed in PCIe slot 6.

   The Oracle Retimer card has a "Y" cable with two connections on the Retimer card. The other end connects to the disk backplane. If you need to remove the Oracle Retimer card to access the cables, see Remove a Half Height PCIe Card.

Copyright © 2025, Oracle and/or its affiliates.

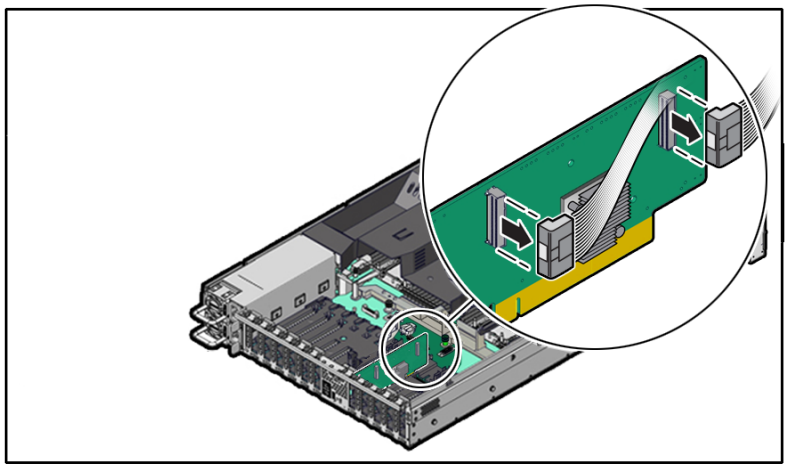

4. Remove the storage drive cage from the chassis. Then remove the 4-Drive disk backplane from the storage drive cage.
   a. Disconnect the disk backplane Power cable and the Aux Signal cable from the motherboard [1]. Also remove the Aux Signal cable and Retimer cable from the cable trough on the side of the chassis wall (on the left side when facing the front of the system).

> **Note**
>
> Due to the lack of space, do not attempt to disconnect cables from the disk backplane at this time.

Copyright © 2025, Oracle and/or its affiliates.

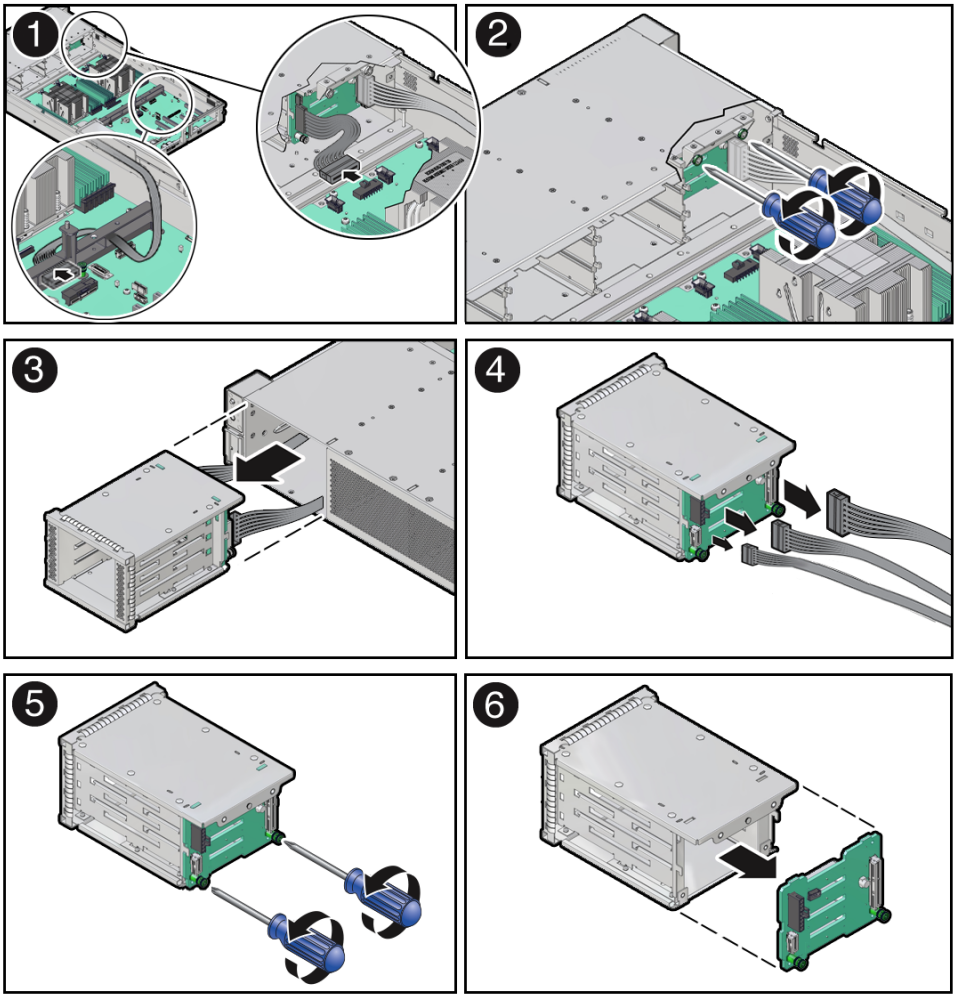

b. Using a Torx T15 screwdriver, loosen the two spring-mounted screws that secure the storage drive cage in to the chassis [2].

c. Ensure that the disk backplane cables are free from snagging motherboard components and gently pull the storage drive cage with cables attached through the front panel of the chassis [3].

d. Disconnect the disk backplane cables from the disk backplane and set them aside [4].

   As shown below, the disk backplane has four connectors to which cables are attached: the Aux Signal [A], Power [B], Temperature Sensor [C] and Retimer [D]. Press and hold the button on the connector to disengage the locking mechanism, then gently disconnect each cable from the disk backplane.

Copyright © 2025, Oracle and/or its affiliates.

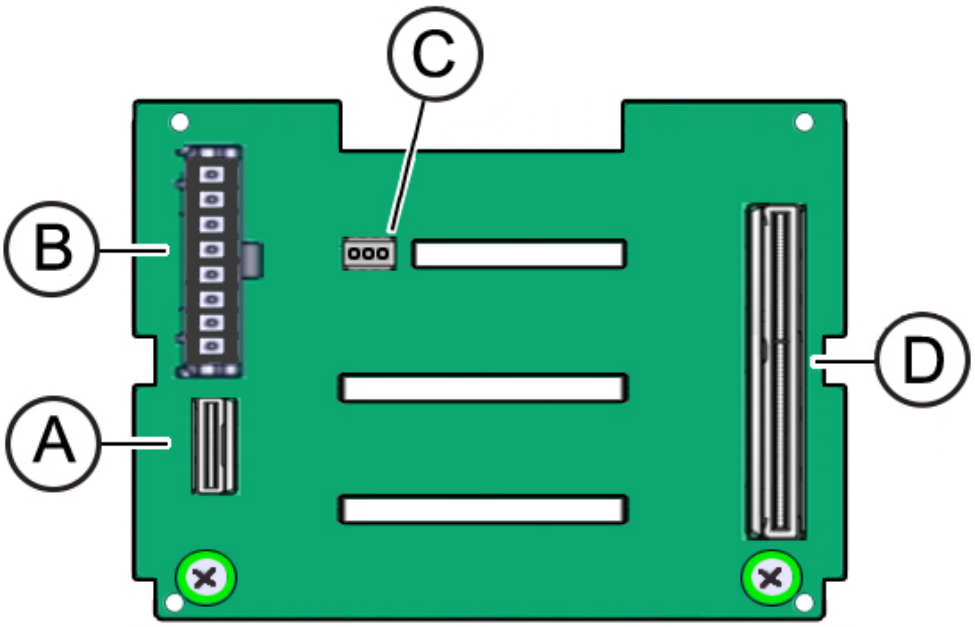

e. Using a Torx T15 screwdriver, loosen the two spring-mounted screws that secure the disk backplane to the storage drive cage [5].

f. Gently remove the disk backplane from the storage drive cage [6].

g. Place the disk backplane on an antistatic mat.

Install the 4-Drive Backplane

To install the 4-Drive disk backplane and storage drive cage:

1. Unpack the replacement 4-Drive disk backplane and place it on an antistatic mat.
2. Install the 4-Drive disk backplane on to the storage drive cage. Then reinstall the storage drive cage in to the chassis.
   a. Align the replacement disk backplane with the rear of the storage drive cage. Using a Torx T15 screwdriver, tighten the two spring-mounted screws to secure the disk backplane to the storage drive cage [1, 2].

Copyright © 2025, Oracle and/or its affiliates.

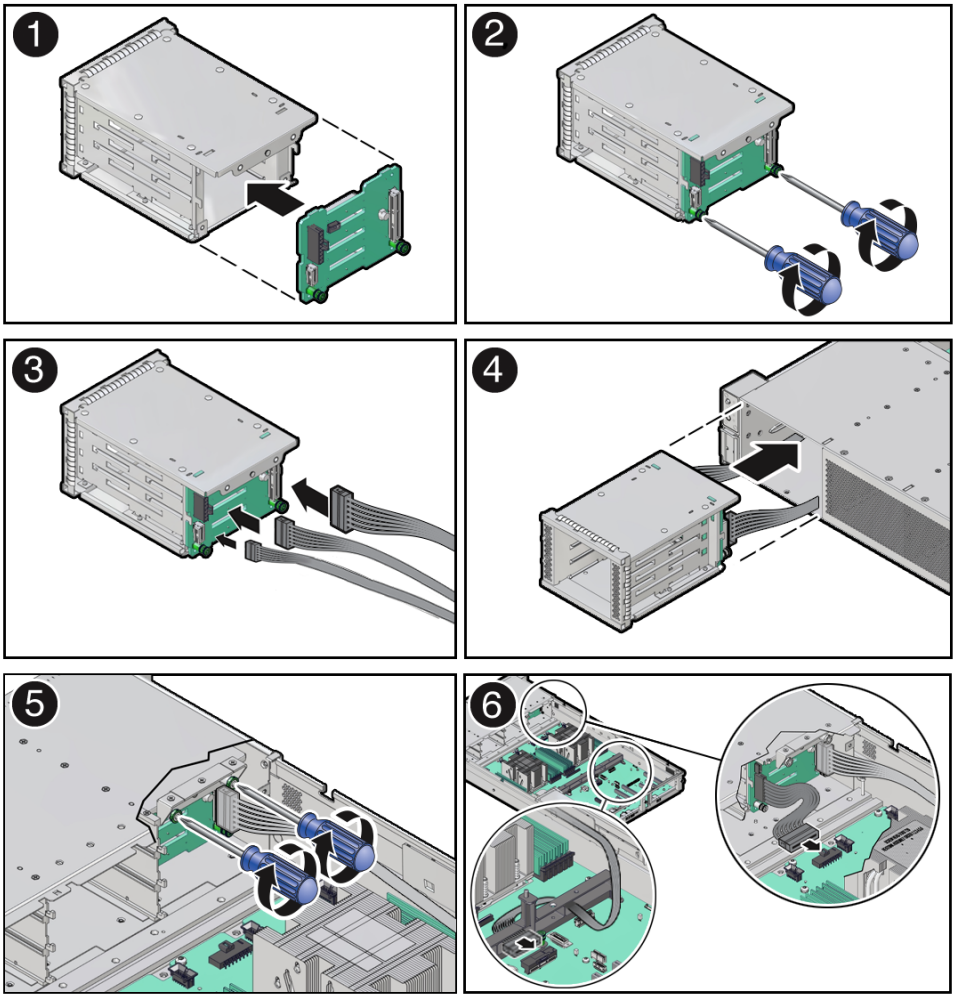

b. Reconnect the disk backplane cables to the disk backplane [3].

As shown below, the disk backplane has four connectors to which cables are attached: the Aux Signal [A], Power [B], Temperature Sensor [C] and Retimer [D]. Attach cables to the appropriate connector.

Copyright © 2025, Oracle and/or its affiliates.

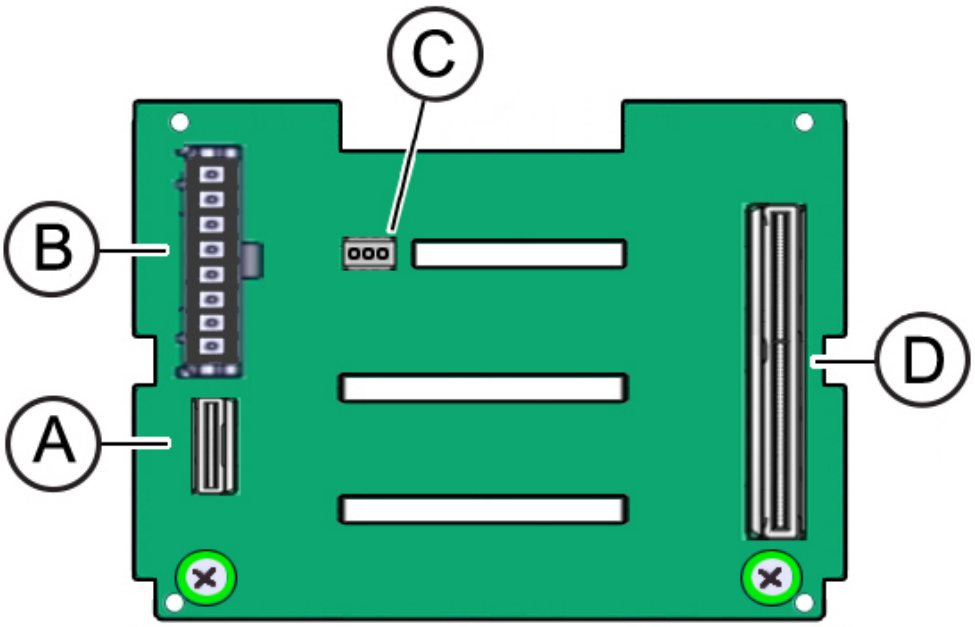

c. Align the storage drive cage with the opening in the front panel of the server. Pull the attached cables through the opening while gently pushing the storage drive cage in to the chassis until it is fully seated in the chassis [4].

d. Using a Torx T15 screwdriver, tighten the two spring-mounted screws to secure the storage drive cage to the chassis [5].

e. Reconnect the disk backplane Aux Signal cable and Power cable to their motherboard connectors [6].

f. Then, gently insert the disk backplane Aux Signal and Retimer cables into the cable trough on the side of the chassis wall (on the left side when facing the front of the system).

Copyright © 2025, Oracle and/or its affiliates.

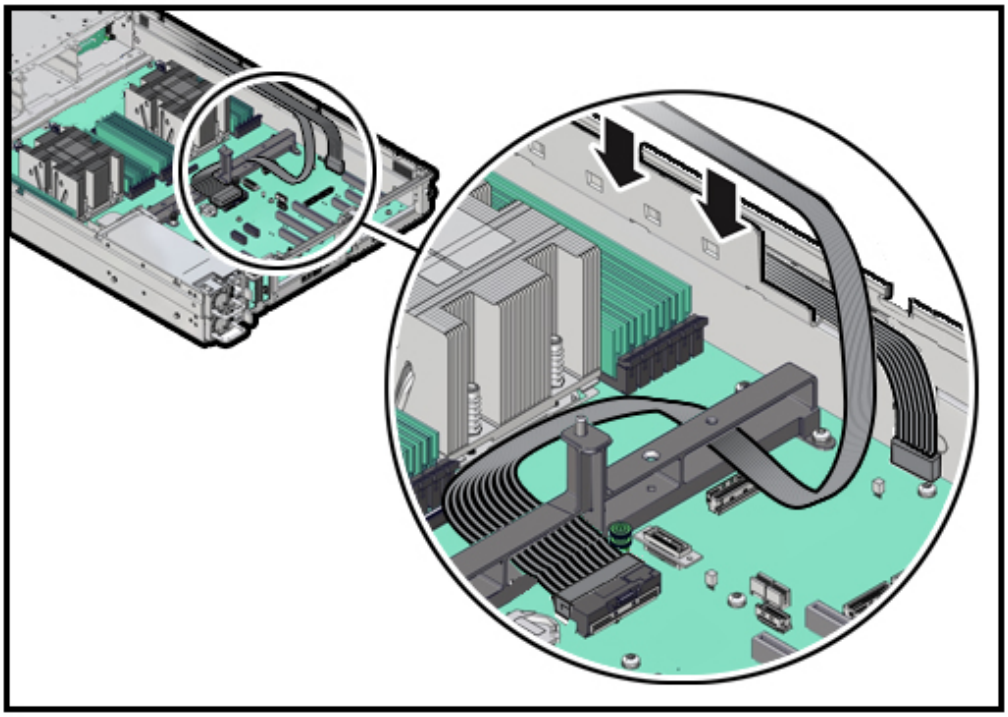

3. Reconnect the "Y" end of the Retimer cable to the Retimer card in PCIe slot 6.

   The cable should have labels that indicate which connector is P1 and P2. Connect those to the P1 and P2 connector sockets on the Retimer card.

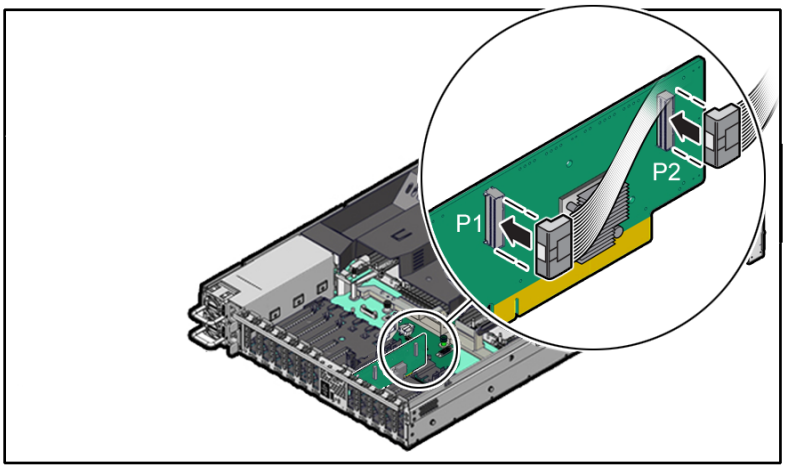

4. Reinstall all NVMe storage drives into the server front panel storage drive cage.

   With the drive latch in the open position, slide the drive into the slot until the drive is fully seated [1] and then close the drive latch to lock the drive in place [2].

Copyright © 2025, Oracle and/or its affiliates.

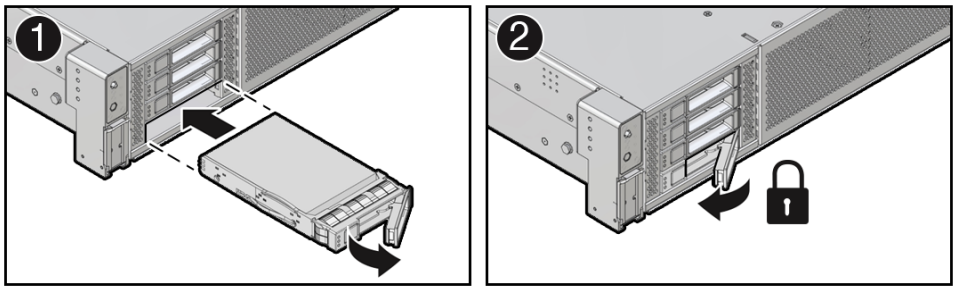

5. Return the server to operation.
   a. Install the fan tray and fan modules.

      See Install the Fan Tray.
   b. Install the air baffle.

      See Install the Air Baffle.
   c. Install the server top cover.

      See Install the Server Top Cover.
   d. Return the server to the normal rack position.

      See Return the Server to the Normal Rack Position.
   e. Reconnect the power cords to the power supplies, and power on the server.

      See Powering On Oracle Database Appliance.
   f. Verify that the power supply AC OK LED is lit.

> **Note**
>
> **IMPORTANT:** When the disk backplane is replaced, the key identity properties (KIP) of the backplane is programmed by Oracle ILOM to contain the same KIP as the other quorum member components. If you removed other quorum member components, you might need to manually program the product serial number (PSN) into the new backplane. For more information, see FRU Key Identity Properties (KIP) Automated Update.

Remove a Disk Backplane Cable

1. Prepare the server for service.
   a. Power off the server.

      See Powering Down the Server.
   b. Disconnect the power cords from the power supplies.

      See Disconnect Cables From the Server.
   c. Extend the server to the maintenance position.

      See Extend the Server to the Maintenance Position.
   d. Attach an antistatic wrist strap.

      See Take Antistatic Measures.

Copyright © 2025, Oracle and/or its affiliates.

e. Remove the server top cover.

   See Remove the Server Top Cover.

f. Remove the air baffle.

   See Remove the Air Baffle.

g. Remove the fan modules and fan tray from the server.

   See Remove the Fan Tray.

2. Disconnect the "Y" end of the Retimer cable from the Retimer card installed in PCIe slot 6.

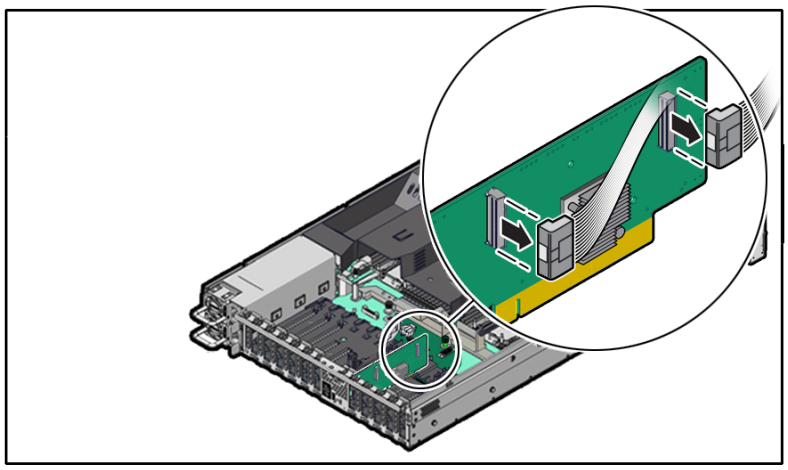

3. Remove the storage drive cage from the chassis and disconnect cables.

   a. Disconnect the disk backplane Power cable and the Aux Signal cable from the motherboard [1]. Also remove the Aux Signal and Retimer cables from the cable trough on the side of the chassis wall (on the left side when facing the front of the system).

> **Note**
>
> Due to the lack of space, do not attempt to disconnect cables from the disk backplane at this time.

Copyright © 2025, Oracle and/or its affiliates.

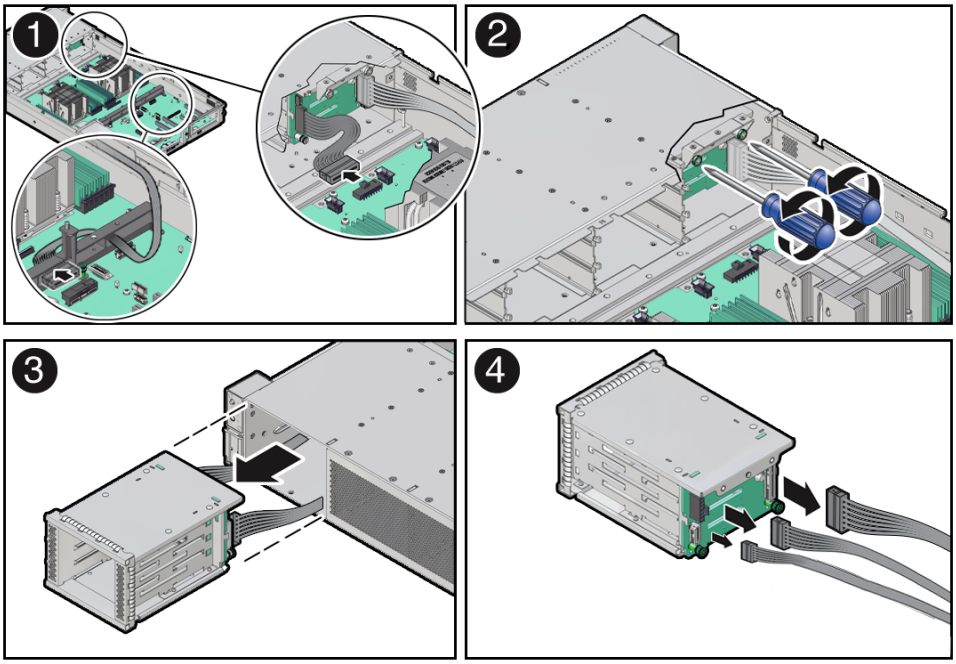

b. Using a Torx T15 screwdriver, loosen the two spring-mounted screws that secure the storage drive cage in to the chassis [2].

c. Ensure that the disk backplane cables are free from snagging motherboard components and gently pull the storage drive cage with cables attached through the front panel of the chassis [3].

d. Disconnect the cable to be replaced from the disk backplane and set it aside [4].

> **Note**
>
> Press and hold the button on the connector to disengage the locking mechanism, then gently pull the connector from the disk backplane.

e. Place the storage drive cage on an antistatic mat.

Install a Disk Backplane Cable

1. Unpack the replacement disk backplane cable and place it on an antistatic mat.
2. Connect the replacement cable the disk backplane and reinstall the storage drive cage in to the chassis.
   a. Connect the replacement cable to the disk backplane [1].

> **Note**
>
> The disk backplane Aux Signal, Power and Retimer cables will only fit into the connectors for which they are designed.

Copyright © 2025, Oracle and/or its affiliates.

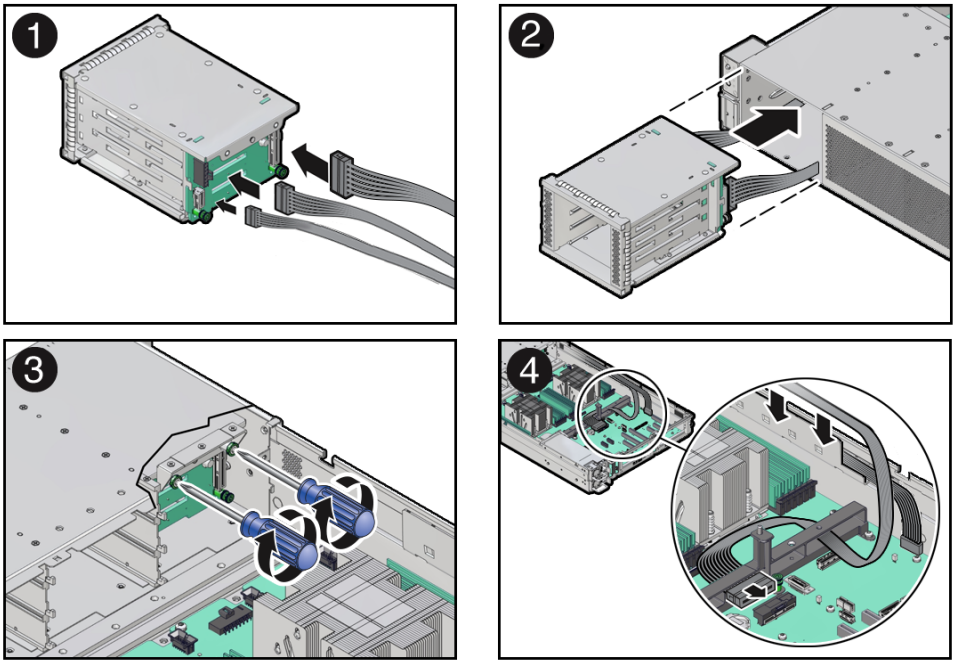

b. Align the storage drive cage with the opening in the front panel of the server. Pull the attached cables through the opening while gently pushing the storage drive cage in to the chassis until it is fully seated in the chassis [2].

c. Using a Torx T15 screwdriver, tighten the two spring-mounted screws to secure the storage drive cage to the chassis [3].

d. Reconnect the disk backplane Aux Signal and Power cables to their motherboard connectors [4].

e. Then reconnect the "Y" end of the Retimer cable to the Retimer card in PCIe slot 6.

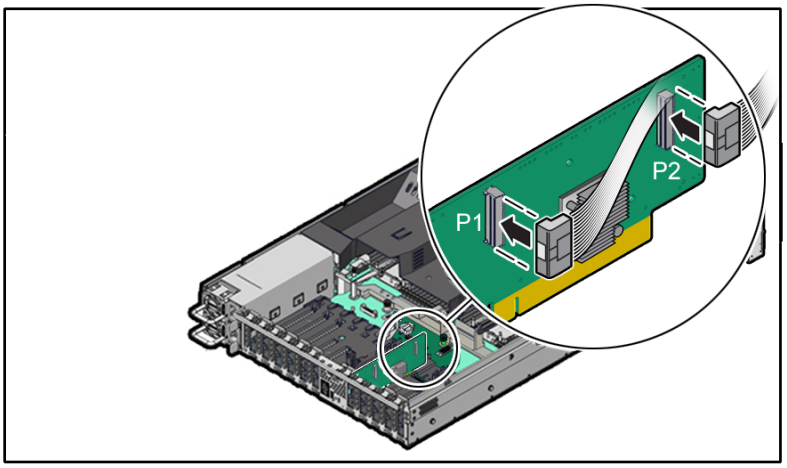

f. Slide the disk backplane Aux Signal and Retimer cables into the cable trough on the side of the chassis wall (on the left side when facing the front of the system).

3. Return the server to operation.

a. Install the fan tray and fan modules.

Copyright © 2025, Oracle and/or its affiliates.

See Install the Fan Tray.

b. Install the air baffle.

See Install the Air Baffle.

c. Install the server top cover.

See Install the Server Top Cover.

d. Return the server to the normal rack position.

See Return the Server to the Normal Rack Position.

e. Reconnect the power cords to the power supplies, and power on the server.

See Powering On Oracle Database Appliance.

f. Verify that the power supply AC OK LED is lit.

Servicing the Front LED Indicator Module (FRU)

Perform tasks in this section to service the front LED indicator module.

The front LED indicator module is a replaceable component that requires you to power off the server before servicing.

> **Caution**
>
> Ensure that all power is removed from the server before removing or installing a front LED indicator module. You must disconnect the power cables before performing this procedure.

> **Caution**
>
> These procedures require that you handle components that are sensitive to electrostatic discharge. This sensitivity can cause the component to fail. To avoid damage, ensure that you follow electrostatic discharge safety measures and antistatic practices. See Electrostatic Discharge Safety.

- Remove the Front LED Indicator Module
- Install the Front LED Indicator Module

Remove the Front LED Indicator Module

1. Prepare the server for service.

   a. Power off the server.

   See Powering Down the Server.

   b. Disconnect the power cords from the power supplies.

   See Disconnect Cables From the Server.

   c. Extend the server into the maintenance position.

   See Extend the Server to the Maintenance Position.

   d. Attach an antistatic wrist strap to your wrist, and then to a metal area on the chassis.

Copyright © 2025, Oracle and/or its affiliates.

See Take Antistatic Measures.

e. Remove the server top cover.

See Remove the Server Top Cover.

2. Disconnect the LED indicator module cable from the motherboard.

> **Note**
>
> To ease removal of the LED indicator module cable, you might need to lift the disk backplane auxiliary signal cable from the cable trough on the side of the chassis wall (on the left side when facing the front of the system).

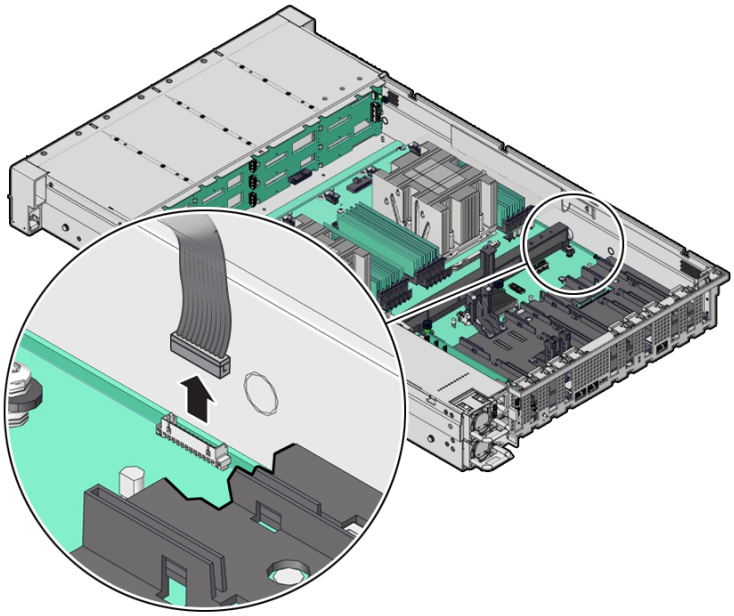

3. Remove the three No. 2 Phillips screws that secure the FIM cable cover to the chassis [1]. Then lift up and remove the FIM cable cover from the FIM cable cover slot.

   Set aside the FIM cable cover.

Copyright © 2025, Oracle and/or its affiliates.

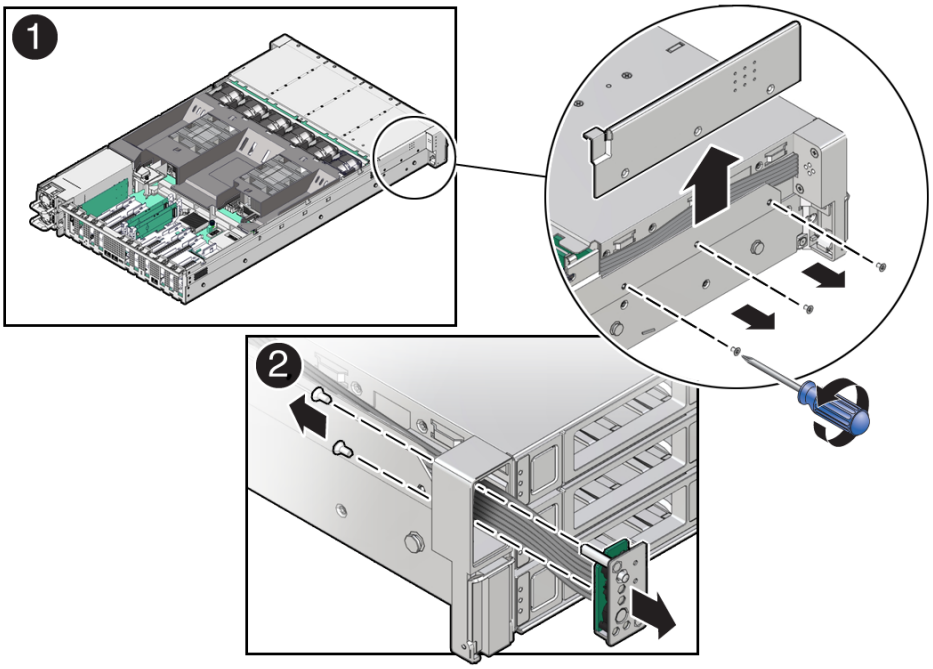

4. Remove the front LED indicator module.
   a. Remove the two No. 2 Phillips screws that secure the LED indicator module to the server front panel [2].
   b. Remove the LED indicator module cable from the cable trough on the side of the chassis wall (on the left side when facing the front of the system).
   c. Then remove the LED indicator module and cable from the system by pulling it out through the server front panel [2].
   d. Place the LED indicator module on an antistatic mat.

Install the Front LED Indicator Module

1. Unpack the replacement front LED indicator module and place it on an antistatic mat.
2. Install the front LED indicator module.
   a. Push the LED indicator module and cable through the LED housing on the server front panel. Then insert and tighten the two No. 2 Phillips screws to secure the LED indicator module to the server front panel [1].

Copyright © 2025, Oracle and/or its affiliates.

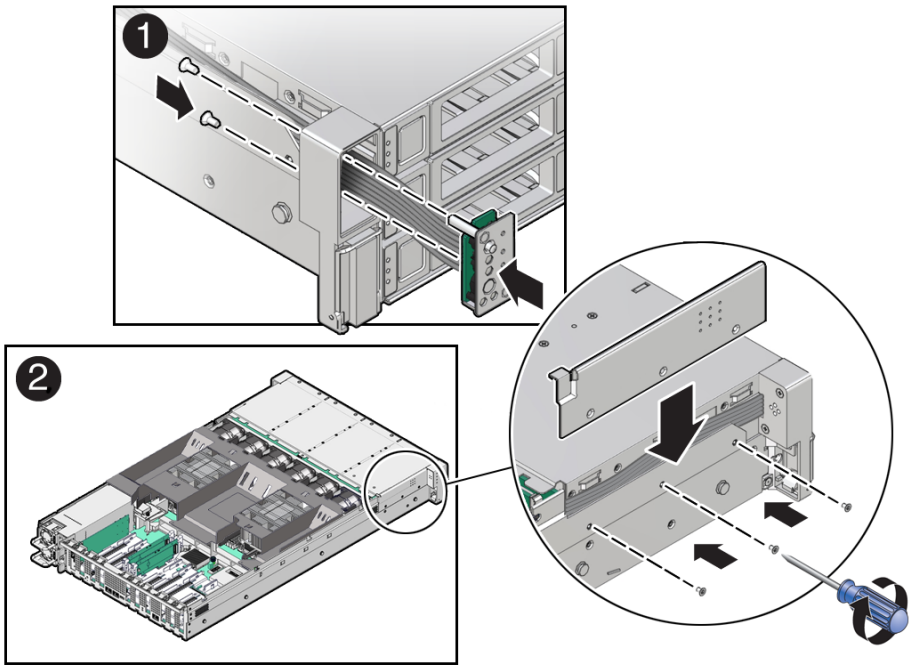

b. Place the FIM cable cover onto the chassis and install the three No. 2 Phillips screws to secure the cover to the chassis [2].

c. Slide the LED indicator module cable into the cable trough on the side of the chassis wall (on the left side when facing the front of the system).

> **Note**
>
> To ease installation of the LED indicator module cable, you might need to lift the disk backplane auxiliary signal cable from the left-side cable trough.

3. Reconnect the LED indicator module cable to the motherboard.

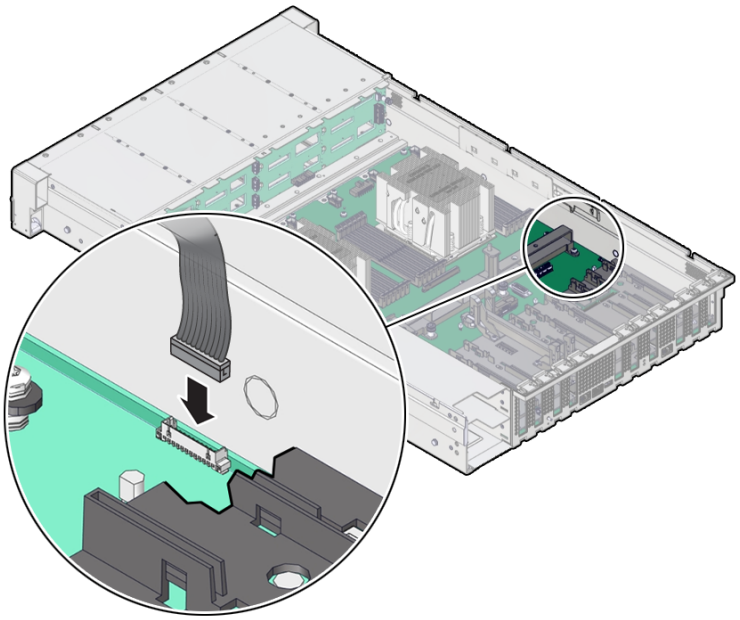

4. Return the server to operation.

Copyright © 2025, Oracle and/or its affiliates.

a. Install the server top cover.

   See Install the Server Top Cover.

b. Return the server to the normal rack position.

   See Return the Server to the Normal Rack Position.

c. Reconnect the power cords to the server power supplies, and power on the server.

   See Powering On Oracle Database Appliance.

d. Verify that the power supply AC OK LED is lit.

Servicing the PCIe Slot Flyover Cable (FRU)

Perform tasks in this section to service the PCIe Slot Flyover Cable.

- Remove the PCIe Flyover Cable
- Install the PCIe Flyover Cable

Remove the PCIe Flyover Cable

The PCIe Flyover cable is required to provide x16 functionality to PCIe slot 6. The Oracle Database Appliance X11-S and X11-L include a PCIe retimer card in slot 6 that is used for front-mounted NVMe SSD storage.

> **Note**
>
> The use of PCIe slot 7 is not supported for this product.

1. Prepare the server for service.

   a. Power off the server.

      See Powering Down the Server.

   b. Disconnect the power cords from the power supplies.

      See Disconnect Cables From the Server.

   c. Extend the server into the maintenance position.

      See Extend the Server to the Maintenance Position.

   d. Attach an antistatic wrist strap to your wrist, and then to a metal area on the chassis.

      See Take Antistatic Measures.

   e. Remove the server top cover.

      See Remove the Server Top Cover.

2. Locate the PCIe Flyover cable in the server.

   The PCIe Flyover cable is installed near the rear of the system system between the motherboard handle and behind PCIe slots 6 and 7. The PCIe Flyover cable is connected to the PCIe slot 6 connector.

3. Disconnect and remove the PCIe Flyover cable.

Copyright © 2025, Oracle and/or its affiliates.

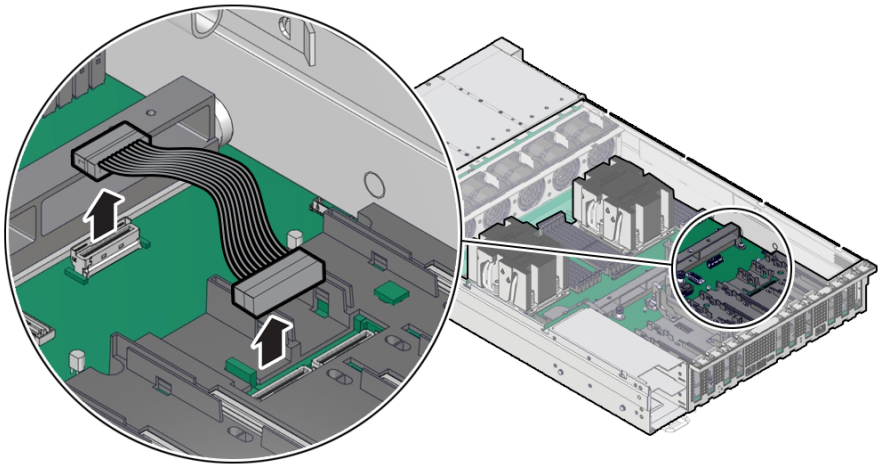

At each end of the cable, press and hold the metal clip to disengage the locking mechanism, then gently lift the PCIe Flyover cable from the connector.

Install the PCIe Flyover Cable

1. Unpack the replacement PCIe Flyover cable.
2. Connect the PCIe Flyover cable to the motherboard and the PCIe slot 6 connector.

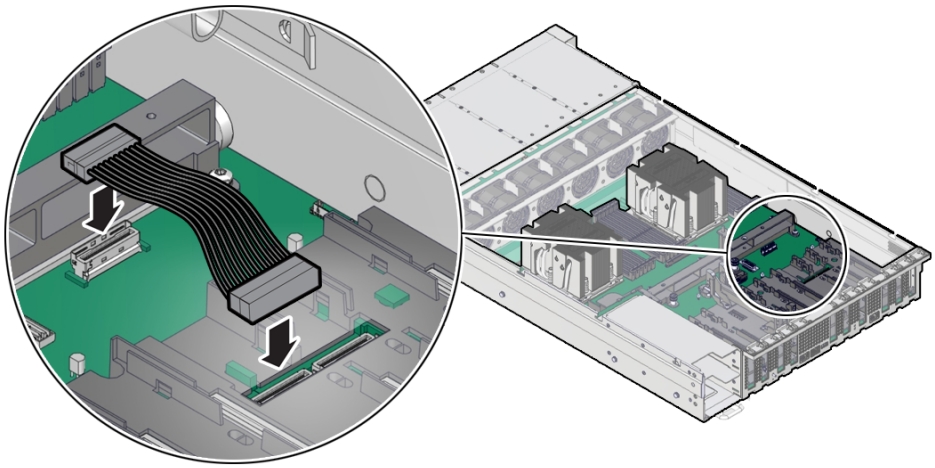

Plug each end of the cable into its connector until you hear an audible click.

3. Return the server to operation.
   a. Install the server top cover.

      See Install the Server Top Cover.
   b. Return the server to the normal rack position.

      See Return the Server to the Normal Rack Position.
   c. Reconnect the power cords to the server power supplies, and power on the server.

      See Powering On Oracle Database Appliance.
   d. Verify that the power supply AC OK LED is lit.

Copyright © 2025, Oracle and/or its affiliates.

Servicing the Motherboard Assembly (FRU)

This section describes how to service the motherboard assembly.

The motherboard assembly is a replaceable component that requires you to power off the server before servicing.

> ⚠ **Caution**
>
> Ensure that all power is removed from the server before removing or installing the motherboard. You must disconnect the power cables before performing these procedures.

> ⚠ **Caution**
>
> These procedures require that you handle components that are sensitive to electrostatic discharge. This sensitivity can cause the component to fail. To avoid damage, ensure that you follow electrostatic discharge safety measures and antistatic practices. See Electrostatic Discharge Safety.

- Remove the Motherboard Assembly
- Install the Motherboard Assembly

Remove the Motherboard Assembly

- Use ESD gloves (not latex or vinyl), if possible, when handling components.
- Obtain a Torx T20 screwdriver for processor socket external cap removal.
- Obtain a Torx T25 screwdriver for motherboard removal.
- Obtain a small flat blade screwdriver for light pipe removal from the old motherboard.

> ⚠ **Caution**
>
> Use the Oracle ILOM backup utility prior to removing the motherboard. This utility backs up the Oracle ILOM configuration of the service processor. Refer to Oracle ILOM Documentation.

1. Prepare the server for service.
   a. Power off the server.

      See Powering Down the Server.
   b. Disconnect the power cords from the power supplies.

      See Disconnect Cables From the Server.
   c. Remove rear panel cables.
   d. Extend the server into the maintenance position.

      See Extend the Server to the Maintenance Position.

Copyright © 2025, Oracle and/or its affiliates.

e. Attach an antistatic wrist strap to your wrist, and then to a metal area of the chassis.

   See Take Antistatic Measures.

f. Remove the server top cover.

   See Remove the Server Top Cover.

2. Remove the air baffle.

   See Remove the Air Baffle.

3. Remove the fan modules.

   See Remove a Fan Module.

4. Remove the fan tray.

   See Remove the Fan Tray.

5. Remove all PCIe cards.

   See Remove a Half Height PCIe Card.

6. Remove the power supplies.

   See Remove a Power Supply.

> **Caution**
>
> During the motherboard removal procedure, it is important to label power supplies with the slot numbers from which they were removed (PS0, PS1). This is required because the power supplies must be reinstalled into the slots from which they were removed; otherwise, the server key identity properties (KIP) data might be lost. When a server requires service, the KIP is used by Oracle to verify warranty information. For more information on KIP, see FRU Key Identity Properties (KIP) Automated Update.

7. Disconnect the front LED indicator module (FIM) ribbon cable [1], disk backplane Power cable [2] and disk backplane Aux Signal cable [3] from the motherboard.

> **Note**
>
> Label any unlabeled cables to ease reconnecting them after the replacement motherboard is installed.

Copyright © 2025, Oracle and/or its affiliates.

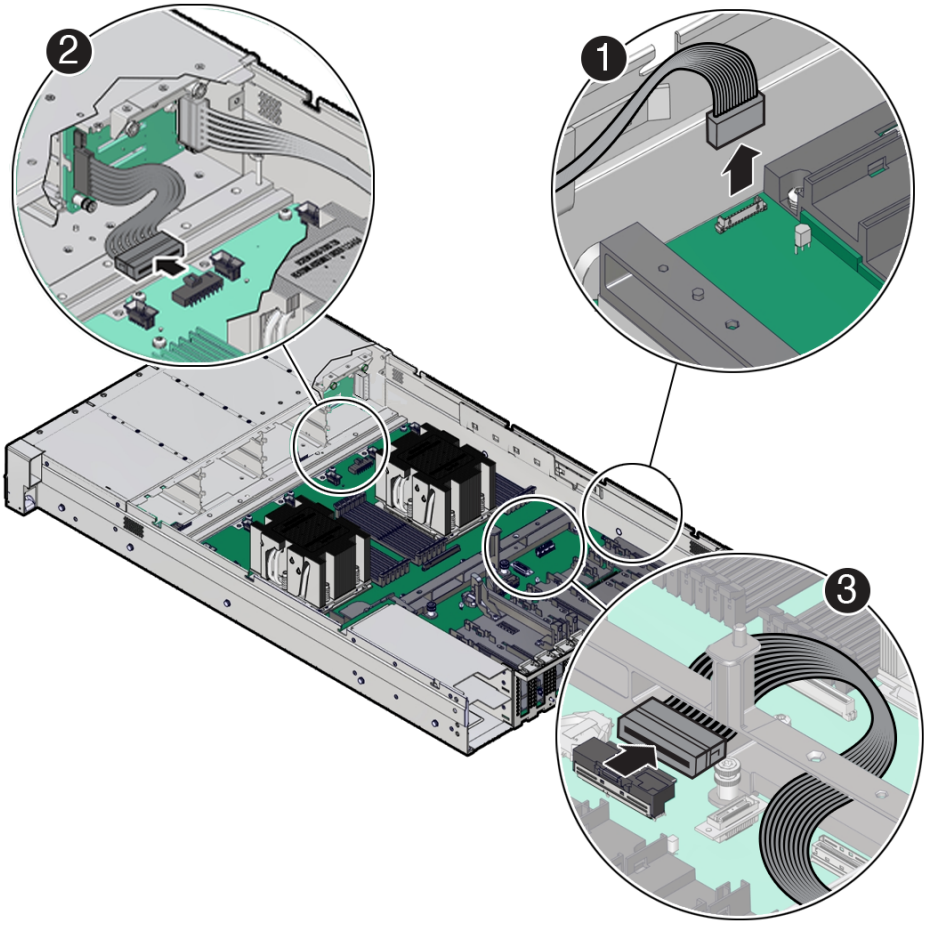

8. Remove the cable guide on the side of the chassis wall (on the left side when facing the front of the system) that secures various cables as this can interfere with motherboard removal.
9. Using a Torx T25 screwdriver, fully loosen the two captive screws that secure the motherboard mid-wall to the chassis.

   If you are not able to remove the motherboard, loosen the third screw in the midwall motherboard handle. After removing the motherboard, tighten the same screw.

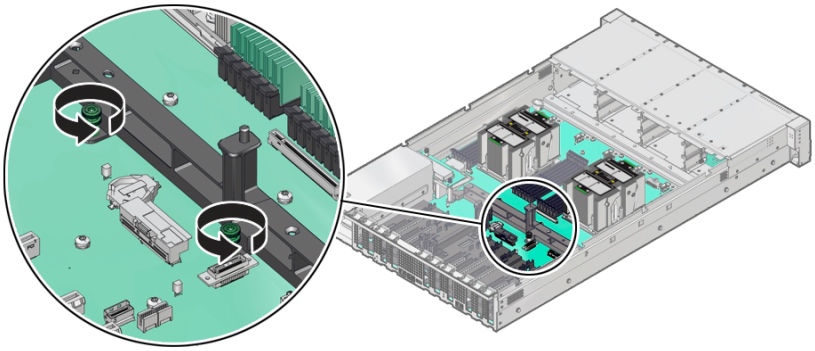

10. Remove the motherboard from the server with reusable components that populate the motherboard in place.

Copyright © 2025, Oracle and/or its affiliates.

> **Note**
>
> Move all cables out of the way so they do not interfere with the procedure. Be careful not to damage or break off the rear Locate light pipe LED indicator.

a. Grasp the midwall motherboard handle labeled **MB Handle**.

   Hold the motherboard with the midwall motherboard handle and the small plastic motherboard handle.

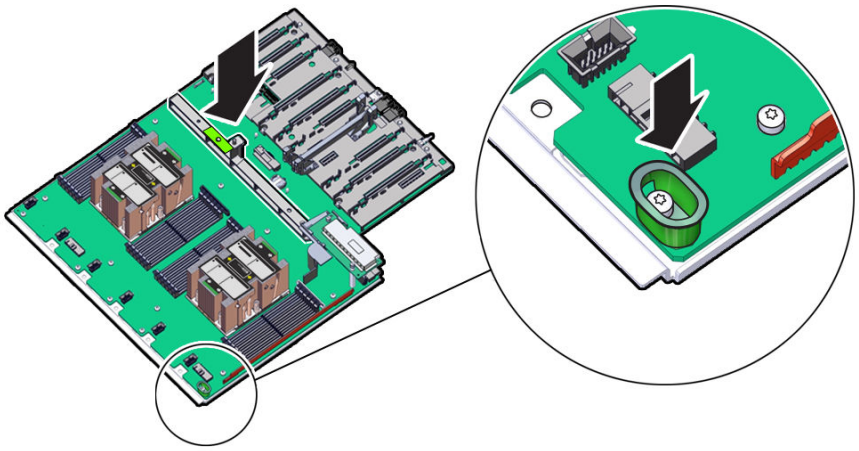

b. Carefully slide the motherboard forward, and while holding the motherboard mid-wall handle and small plastic motherboard handle, lift it out of the chassis.

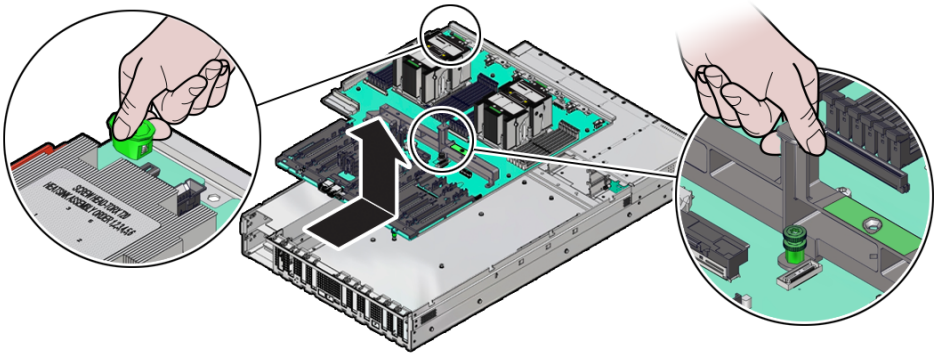

c. Place the motherboard assembly on an antistatic mat.

11. Unpack and place the new motherboard assembly on an antistatic mat by the old motherboard.

12. Remove the External Cap(s) from the new replacement motherboard:

    The external cap is used to protect the socket pins if the processor is not installed. It must be removed before a processor can be installed. The following figure shows the External Cap.

Copyright © 2025, Oracle and/or its affiliates.

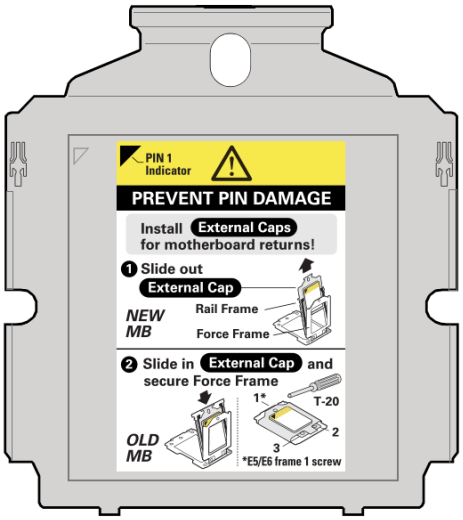

a. Unscrew the socket Force Frame.

Using a Torx T20 screwdriver, fully loosen the captive Force Frame Retention Screw that secures the Force Frame to the socket. Apply counter-pressure to the spring-loaded force frame when opening.

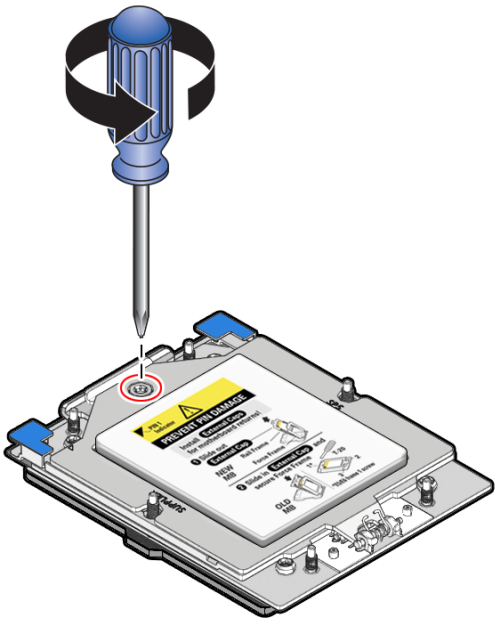

b. Lift the force frame to the open position.

Copyright © 2025, Oracle and/or its affiliates.

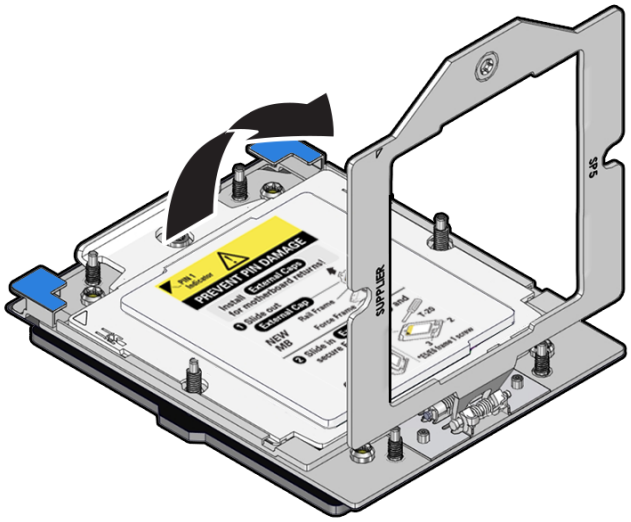

c. On the socket, open the Rail Frame.

Squeeze the blue tabs to release the rail frame.

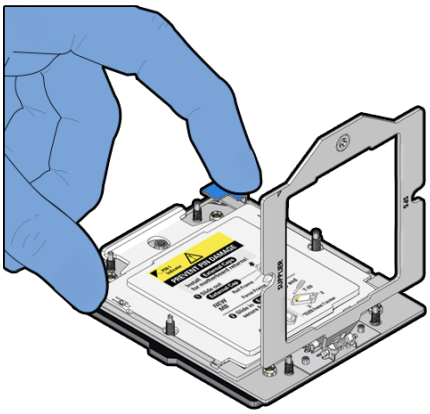

Lift the processor rail frame by holding its lift tabs and rotating the rail frame to its near vertical position.

> **Note**
>
> The rail frame is spring-loaded. Hold on to the rail frame as it releases from the socket frame, when rotating it to the vertical position.

Copyright © 2025, Oracle and/or its affiliates.

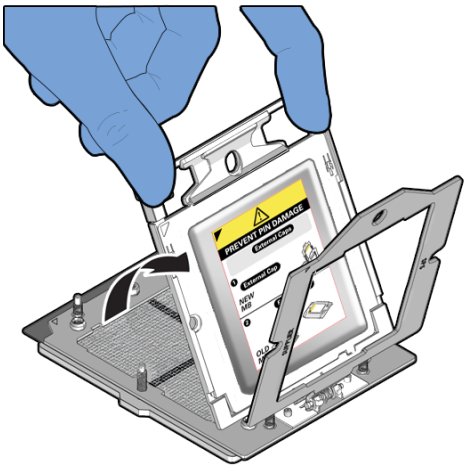

d. Holding the socket cover external cap by its handle, slide the External Cap up and out of the Rail Frame.

> ⚠ **Caution**
>
> Return the motherboard if the pins are damaged. The processor socket pins are very fragile. A light touch can bend the processor socket pins beyond repair.

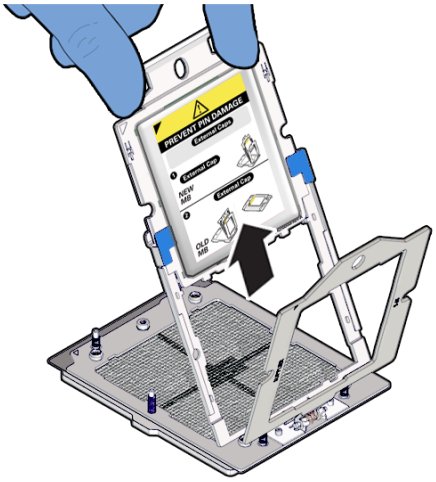

Retain the external cap. Do not attempt to reinstall it. The cap will need to be placed on the processor socket of the old motherboard. This will prevent damage during shipping back to the Service Center for motherboard failure analysis.

e. If you have a two processor system, repeat steps 12a through 12d to remove the second processor External Cap from the new motherboard.

13. Remove the following reusable components from the old motherboard and install them onto the new motherboard.

    a. Move the motherboard PCIe Flyover cable from the old motherboard to the new motherboard.

    Remove the PCIe Flyover Cable and Install the PCIe Flyover Cable.

    b. Move all DIMMs from the old motherboard to the new motherboard.

Copyright © 2025, Oracle and/or its affiliates.

Install the DIMMs only in the slots (connectors) that correspond to the slots from which they were removed. Performing a one-to-one replacement of the DIMMs significantly reduces the possibility that the DIMMs will be installed in the wrong slots. If you do not reinstall the DIMMs in the same slots, server performance might suffer and some DIMMs might not be used by the server.

See Identify and Remove a DIMM and Install a DIMM.

c. Move all M.2 SSD flash risers from the old motherboard to the new motherboard.

Each flash riser board contains a single M.2 SSD. You do not need to remove the M.2 SSD from the flash riser board when moving it to the new motherboard. However, you must install the flash riser boards into the same slots on the new motherboard as they were installed on the old motherboard.

See Remove a Flash Riser Board and Install a Flash Riser Board.

d. Move each processor and heatsink from the old motherboard to the new replacement motherboard.

Be sure to install each processor into the same socket on the new motherboard as it was installed in on the old motherboard.

See Identify and Remove a Processor and Install a Processor.

14. Check to see if the replacement motherboard has a Locate light pipe installed, if not do the following:

a. Insert a flat tool such as a screwdriver or penknife blade between the light pipe housing and the light pipe.

> ⚠ **Caution**
>
> **Equipment damage**. The light pipe is fragile. Handle it carefully.

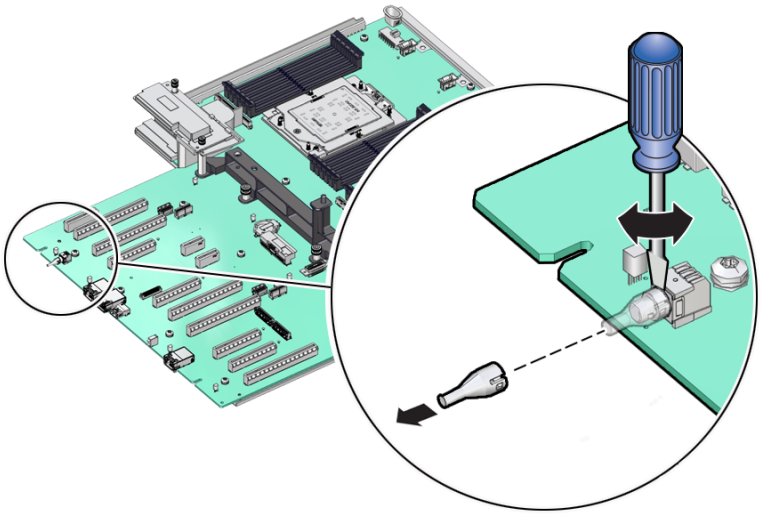

b. Twist the tool back and forth to release the light pipe from the housing.

c. Pull the light pipe away from the housing.

d. Install the light pipe on the replacement motherboard by first matching the rectangular holes on the outside of the light pipe with the retaining clips on the housing

Copyright © 2025, Oracle and/or its affiliates.

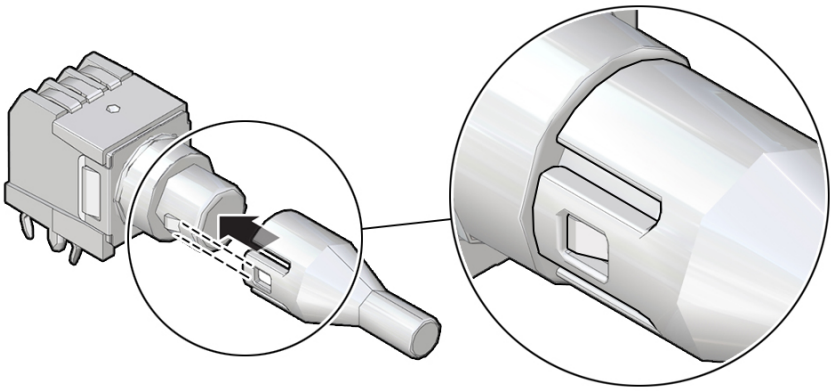

e. Push the light pipe onto the housing until the clips latch in the holes.

15. Install the external socket caps you removed earlier from the new motherboard and install them on the vacant sockets of the old motherboard.

a. Holding the External Cap by its handle, slide it into the processor rail frame on the old motherboard.

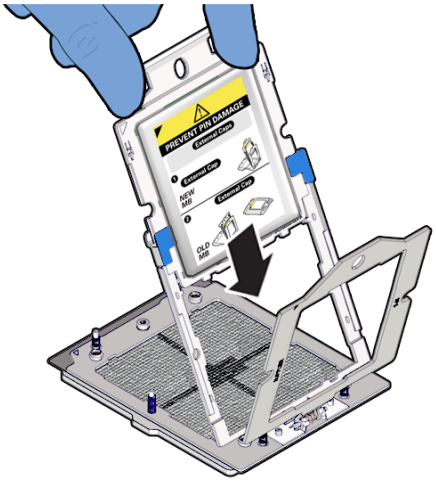

Ensure that the two insertion tabs at the bottom of the External Cap are inserted into the slots in the rail frame.

Copyright © 2025, Oracle and/or its affiliates.

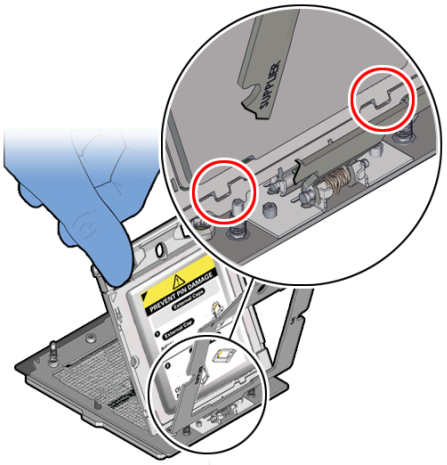

b. Grasping the rail frame edge [1], rotate the rail frame to the closed position [2].

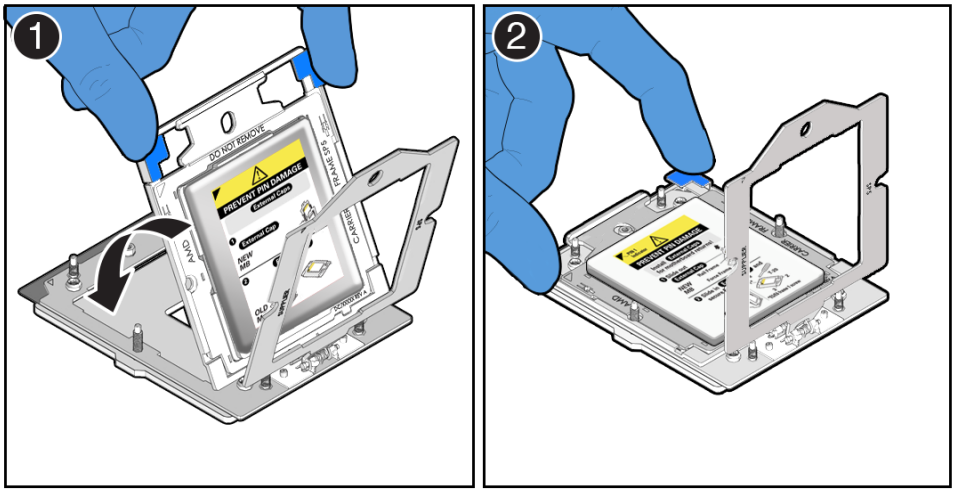

c. Rotate the force frame to its closed position on the socket stiffener frame.

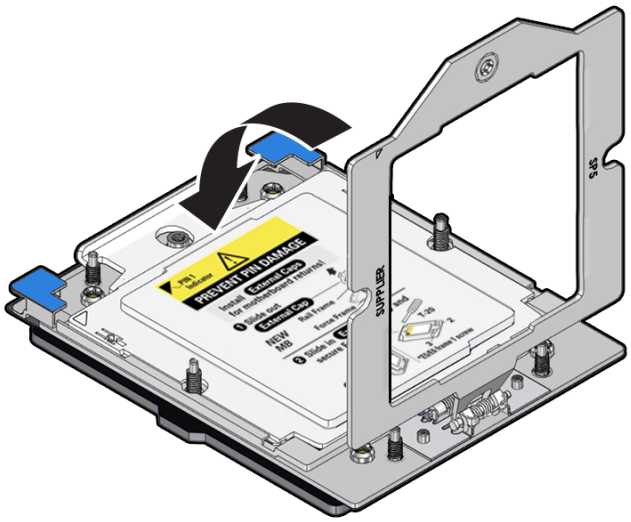

Copyright © 2025, Oracle and/or its affiliates.

d. Using a torque driver set to 12 in-lb (inch-pound) (1.35 Nm/13.5 kg-cm) with a Torx T20 bit, fully tighten the captive screw that secures the force frame to the socket stiffener frame.

   Use one hand to hold down the spring-loaded force frame until the screw is tightened.

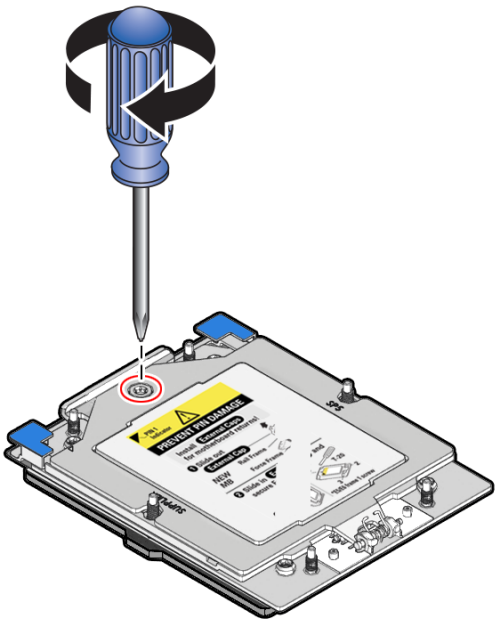

e. Repeat steps 15a through 15d if your system had a second processor.

f. Place the old motherboard in the box that the new motherboard came in and return it to the Oracle Service Center for failure analysis.

Install the Motherboard Assembly

- Use ESD gloves (not latex or vinyl), if possible, when handling components.
- Obtain a Torx T25 screwdriver for motherboard installation.

1. Attach an antistatic wrist strap to your wrist, and then to a metal area on the chassis.

   See Take Antistatic Measures.

2. Carefully lift and place the motherboard assembly into the chassis.

   While holding the motherboard mid-wall handle with one hand and the small plastic handle at the front corner with the other, lower the motherboard into the chassis. You need to tilt the motherboard downward towards the back of the chassis so that it fits under the sheet metal housing for the power supply and then lay the motherboard flat into the server chassis. Slide the motherboard to the back of the server to engage the raised standoffs.

   > ⚠ **Caution**
   >
   > Be careful not to damage the rear Locate Button/LED when placing the motherboard into the chassis.

Copyright © 2025, Oracle and/or its affiliates.

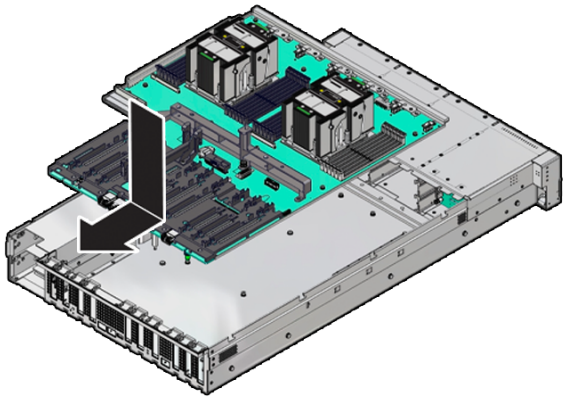

3. Using a Torx T25 screwdriver, tighten the two captive screws to secure the motherboard mid-wall to the chassis.

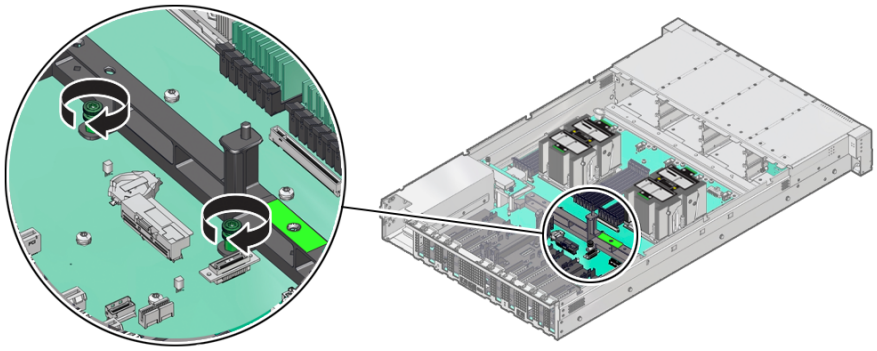

4. Replace the cable guide on the side of the chassis wall (on the left side when facing the front of the system) that secures various cables against the chassis side wall.
5. Reconnect the disk backplane Power cable [1], disk backplane Aux Signal cable [2] and front LED indicator module (FIM) ribbon cable [3] to their connectors on the motherboard.

Copyright © 2025, Oracle and/or its affiliates.

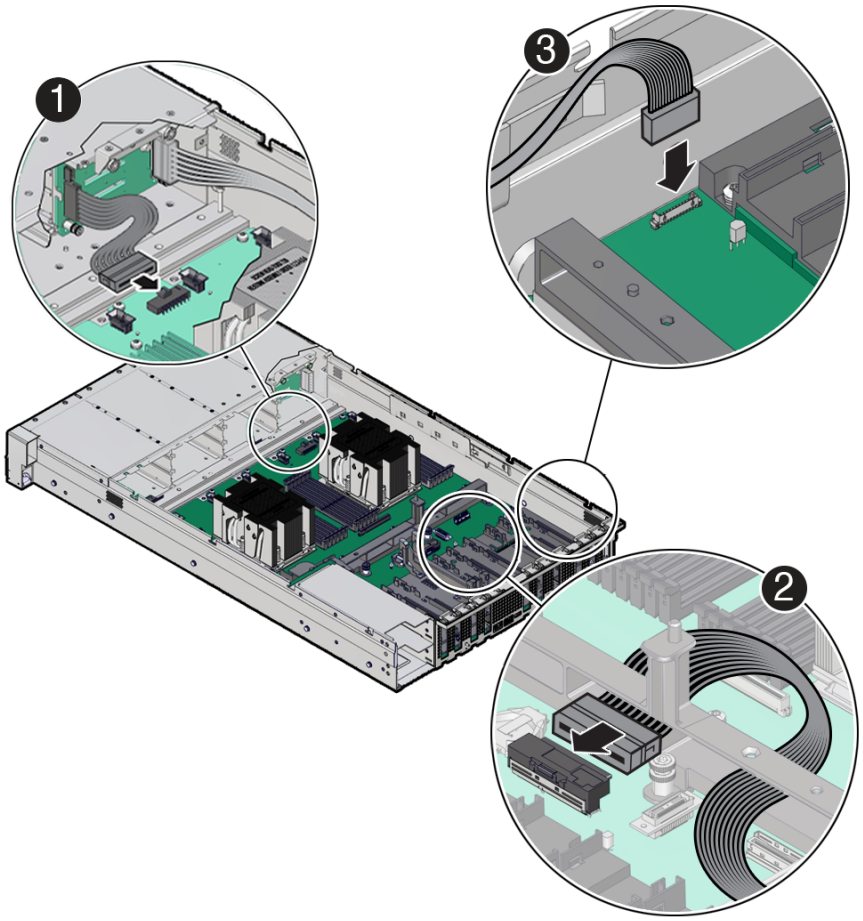

6. Reinstall PCIe cards.

   See Install a Half Height PCIe Card.

7. Reinstall the fan tray.

   See Install the Fan Tray.

8. Reinstall the fan modules.

   See Install a Fan Module.

9. Reinstall the air baffle.

   See Install the Air Baffle.

10. Reinstall the power supplies.

    See Install a Power Supply.

> ⚠ **Caution**
>
> When reinstalling power supplies, it is important to reinstall them into the slots from which they were removed during the motherboard removal procedure; otherwise, the server key identity properties (KIP) data might be lost. When a server requires service, the KIP is used by Oracle to verify warranty information. For more information on KIP, see FRU Key Identity Properties (KIP) Automated Update.

Copyright © 2025, Oracle and/or its affiliates.

11. Return the server to operation.
    a. Install the server top cover.

       See Install the Server Top Cover.
    b. Return the server to the normal rack position.

       See Return the Server to the Normal Rack Position.
    c. Reconnect the power cords to the power supplies, and power on the server.

       See Powering On Oracle Database Appliance.
    d. Verify that the power supply AC OK LED is lit.

Component Fault Management

Perform component fault management on Oracle Database Appliance systems.

Typically, when a faulty component is replaced and the server is returned to service, the fault state of the component in Oracle ILOM is automatically cleared and the component Service Required indicator will turn off. This is the default behavior for all components that have an embedded FRU serial number in the component firmware.

For replaced components that do not have an embedded FRU serial number, or do not automatically clear their fault state after the component has been repaired and the server is returned to service, you can use Oracle ILOM command line interface to manually clear the fault state. Use the following syntax:

```
set /path_to_target clear_fault_action=true
```

Where *path_to_target* is the path to the component (such as a DIMM) that had the fault.

In addition, the Fault Management shell can also be used. Use of the Fault Management shell is reserved for Oracle Service. For more information on component fault management:

Refer to the *Oracle ILOM User's Guide for SystemMonitoring and Diagnostics* available in the Oracle ILOM Documentation Library for your version of Oracle ILOM.

Copyright © 2025, Oracle and/or its affiliates.

6

Returning Oracle Database Appliance to Operation

Perform tasks to return the Oracle Database Appliance to operation after service.

- Install the Air Baffle
- Install the Server Top Cover
- Remove Antistatic Measures
- Reinstall the Server Into the Rack
- Return the Server to the Normal Rack Position
- Install the Cable Management Arm (Optional)
- Powering On Oracle Database Appliance

Install the Air Baffle

1. Install the air baffle by placing it into the server and lowering it to its inserted position.

   To install the air baffle, the baffle must fit around the processor heatsinks, then lifted up about 50 degrees. Locate the tabs on the air baffle so that one tab on each side is under the lip of the fan tray, and the others are on top of the fan tray.

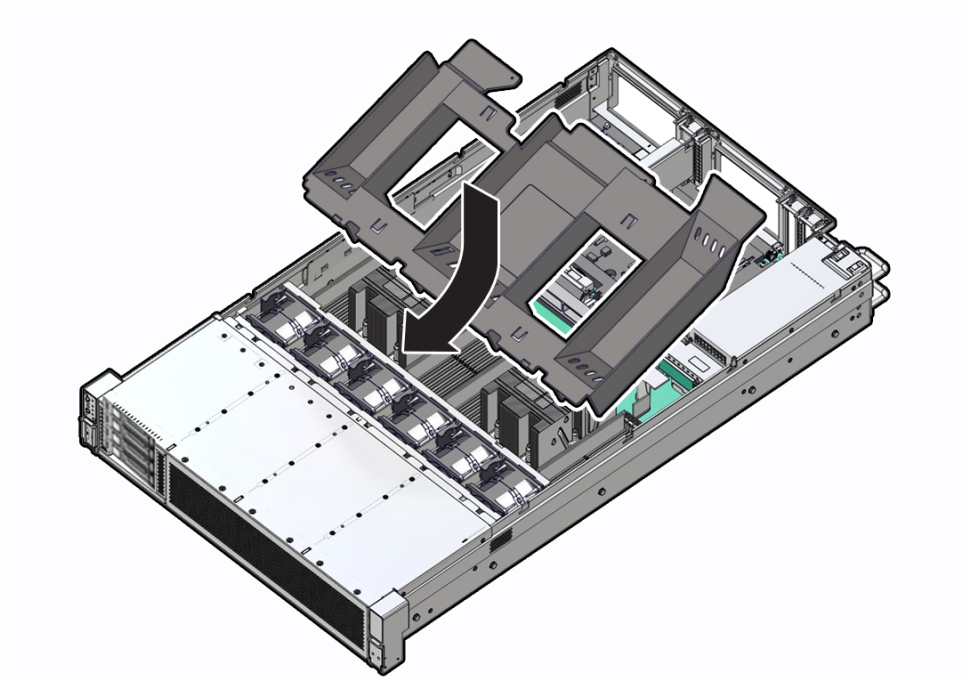

2. Consider your next step:
   - If you removed the air baffle as part of another procedure, return to that procedure.
   - Otherwise, continue to with this procedure.

Copyright © 2025, Oracle and/or its affiliates.

3. Return the server to operation:
   a. Install the server top cover.

      See Install the Server Top Cover.
   b. Return the server to the normal rack position.

      See Return the Server to the Normal Rack Position.
   c. Reconnect the power cords and data cables to the server.
   d. Power on the server.

      See Powering On Oracle Database Appliance.
   e. Verify that the power supply AC OK LED is lit.

Install the Server Top Cover

1. Place the top cover on the chassis [1].
   - Set the cover down so that it hangs over the back of the server by about 1 inch (25 mm) and the side latches align with the cutouts in the chassis.
   - Check both sides of the chassis to ensure that the top cover is fully down and flush with the chassis. If the cover is not fully down and flush with the chassis, slide the cover towards the back of the chassis to position the cover in the correct position.
   - Gently slide the cover toward the front of the chassis. As you slide the cover toward the front of the server, the release button on the top of the server automatically rotates downward to the closed position.

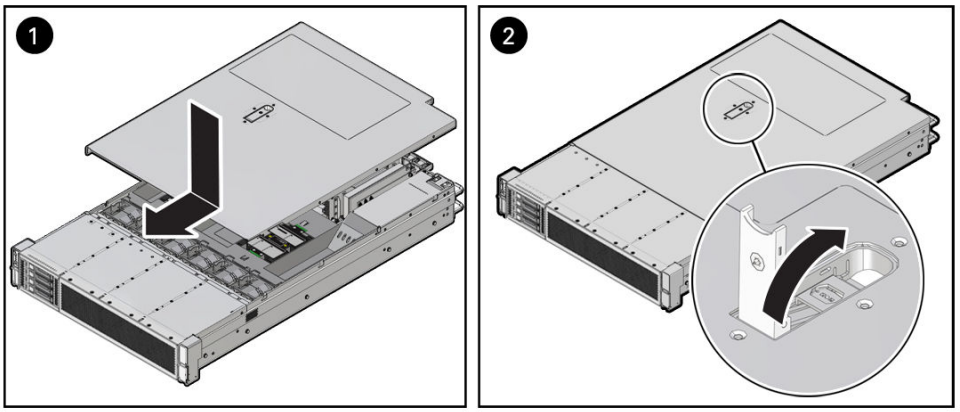

2. Latch the top cover closed by pushing down on the button until it is flush with the cover and you hear an audible click [2].

   An audible click indicates that the cover is latched.
3. Use a Torx T15 screwdriver to turn the release button latch counter-clockwise to the locked position.

Remove Antistatic Measures

- Remove any antistatic straps or conductors from the server chassis.

Copyright © 2025, Oracle and/or its affiliates.

Reinstall the Server Into the Rack

Use this procedure to install the server chassis with mounting brackets into the slide-rail assemblies that are mounted to the rack.

> ⚠ **Caution**
>
> **Personal Injury or Equipment Damage**: This procedure requires a minimum of two people because of the weight of the server. Attempting this procedure alone could result in equipment damage or personal injury.
>
> Always load equipment into a rack from the bottom up so that the rack does not become top-heavy and tip over. Extend the rack anti-tilt bar to prevent the rack from tipping during equipment installation.

1. To prevent the rack from tipping forward when the server is extended, extend all rack anti-tilt mechanisms.

   See Stabilize the Rack.

2. Push the slide-rails as far as possible into the slide-rail assemblies in the rack.
3. Position the server so that the back ends of the mounting brackets are aligned with the slide-rail assemblies that are mounted in the rack.
4. Insert the mounting brackets into the slide-rails, and then push the server into the rack until the mounting brackets are flush with the slide-rail stops (approximately 30 cm or 12 inches).

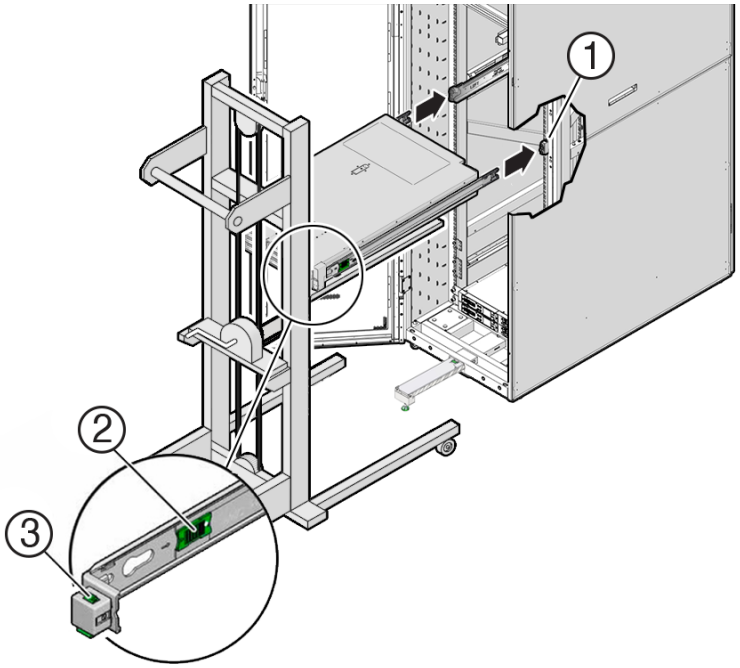

Call Out	Description
1	Inserting mounting bracket into slide-rail

Copyright © 2025, Oracle and/or its affiliates.

Call Out	Description
2	Slide-rail release button
3	Slide-rail lock

5. Simultaneously push and hold the green slide-rail release buttons on each mounting bracket while you push the server into the rack. Continue pushing the server into the rack until the slide-rail locks (on the front of the mounting brackets) engage the slide-rail assemblies with an audible click.

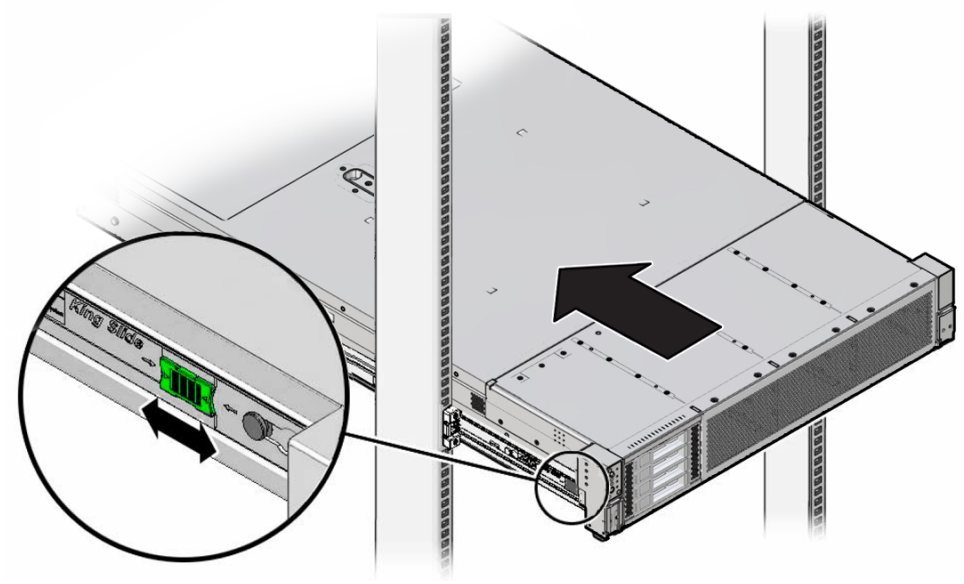

> ⚠ **Caution**
>
> Before you install the optional cable management arm verify that the server is securely mounted in the rack and that the slide-rail locks are engaged with the mounting brackets.

6. If you extended the rack anti-tilt mechanism to stabalize the rack, retract it back to its normal position.

Return the Server to the Normal Rack Position

If the server is in the extended maintenance position, use this procedure to return the server to the normal rack position.

1. Push the server back into the rack, as described in the following steps.
   a. Simultaneously pull and hold the two green release tabs (one on each side of the slide rails on the server) toward the front of the server, while you push the server into the rack.

      Verify that the cable management arm (CMA) retracts without binding.

Copyright © 2025, Oracle and/or its affiliates.

> **Note**
>
> To pull the green release tab, place your finger in the center of the tab, not on the end, and apply pressure as you pull the tab toward the front of the server.

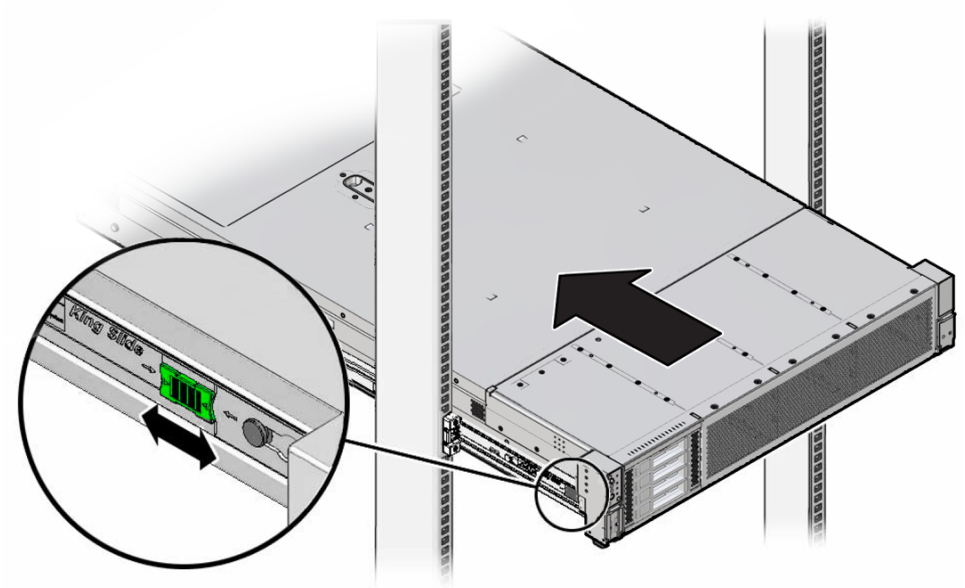

b. Continue pushing the server into the rack until the slide-rail locks (on the front of the server) engage the slide-rail assemblies.

   You hear an audible click when the server is in the normal rack position.

2. Do one of the following:
   - If you previously removed the CMA, proceed to the next section to reinstall it. See Install the Cable Management Arm (Optional).
   - If you did not remove or purchase the optional cable management arm, retract the rack anti-tilt mechanism back to its normal position.

Install the Cable Management Arm (Optional)

Follow this procedure to install the cable management arm (CMA), which you can use to manage cables connected to the back of the server.

> **Note**
>
> Before you install the CMA, ensure that the right-angle AC power cables are long enough to connect to the rackmounted servers when routed through the CMA.

1. Unpack the CMA, which contains the following components.

Copyright © 2025, Oracle and/or its affiliates.

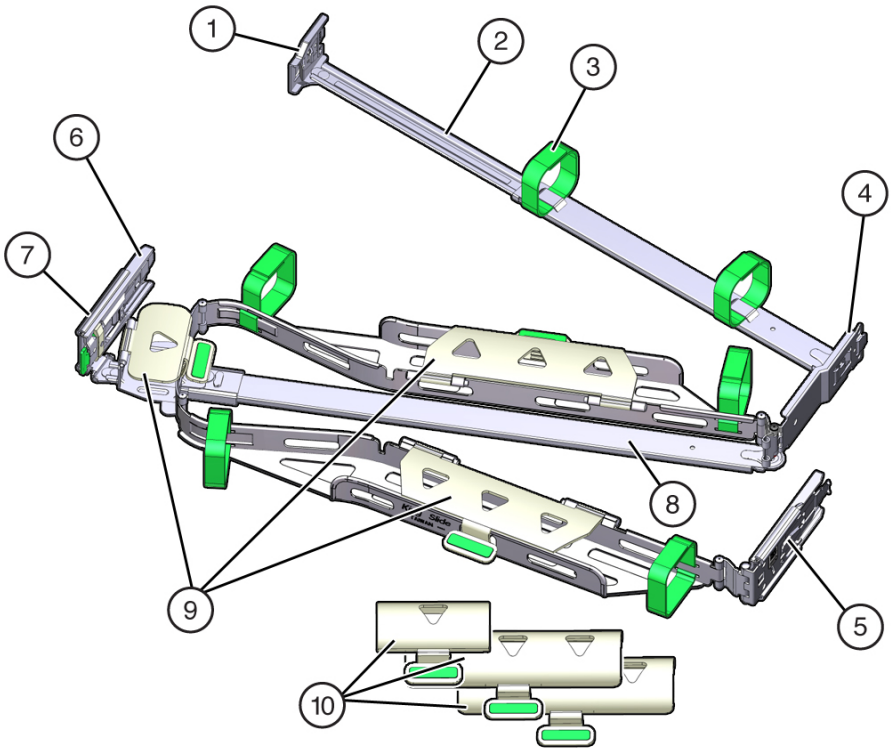

Call Out	Description
1	Connector A
2	Front slide bar
3	Velcro straps (6)
4	Connector B
5	Connector C
6	Connector D
7	Slide-rail latching bracket (used with connector D)
8	Back slide bar
9	Server flat cable covers
10	Server round cable covers (optional)

2. Prepare the CMA for installation.

   a. Ensure that you install the flat cable covers for your server on the CMA.

   b. Ensure that the six Velcro straps are threaded into the CMA.

> **Note**
>
> Ensure that the two Velcro straps located on the front slide bar are threaded through the opening in the top of the slide bar, as shown in the illustration in Step 1. This prevents the Velcro straps from interfering with the expansion and contraction of the slide bar when the server is extended out of the rack and returned to the rack.

Copyright © 2025, Oracle and/or its affiliates.

c. To make it easier to install the CMA, extend the server approximately 13 cm (5 inches) out of the front of the rack.

d. Take the CMA to the back of the equipment rack, and ensure that you have adequate room to work at the back of the server.

> **Note**
>
> References to "left" or "right" in this procedure assume that you are facing the back of the equipment rack.

> **Note**
>
> Throughout this installation procedure, support the CMA and do not allow it to hang under its own weight until it is secured at all four attachment points.

3. To install CMA connector A into the left slide-rail:

   a. Insert CMA connector A into the front slot on the left slide-rail until it locks into place with an audible click [1 and 2].

      The connector A tab (callout 1) goes into the slide-rail front slot (callout 2).

   b. Gently tug on the left side of the front slide bar to verify that connector A is properly seated.

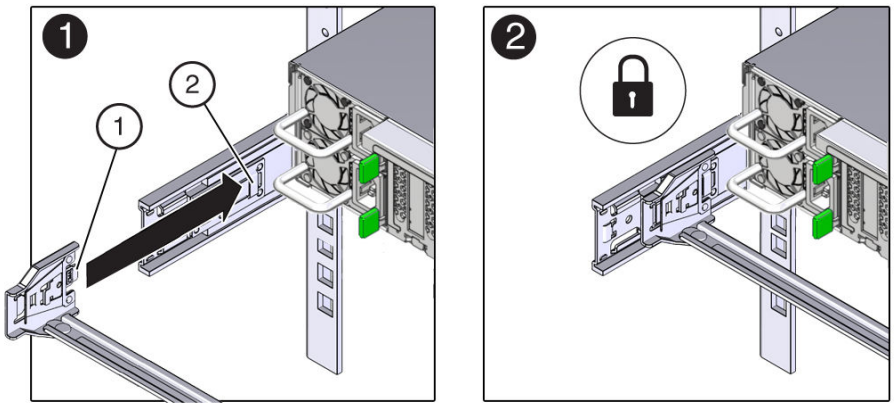

Call Out	Description
1	Connector A tab
2	Left slide-rail front slot

4. To install CMA connector B into the right slide-rail:

   a. Insert CMA connector B into the front slot on the right slide-rail until it locks into place with an audible click [1 and 2].

      The connector B tab (callout 1) goes into the slide-rail front slot (callout 2).

   b. Gently tug on the right side of the front slide bar to verify that connector B is properly seated.

Copyright © 2025, Oracle and/or its affiliates.

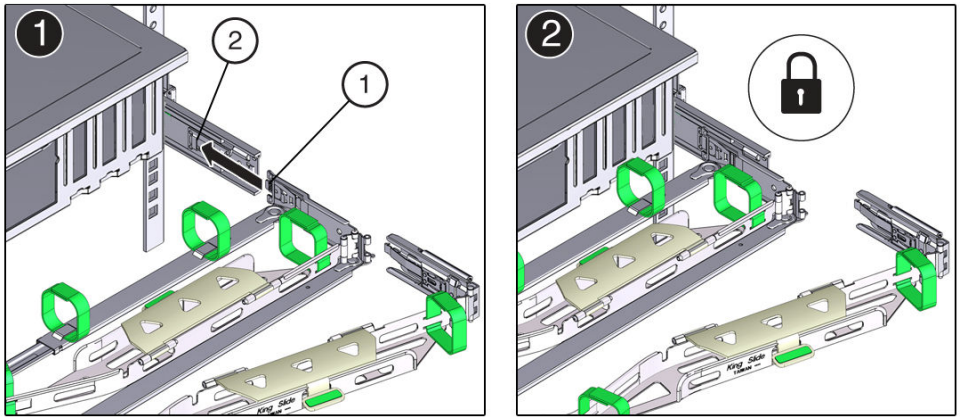

Call Out	Description
1	Connector B tab
2	Right slide-rail front slot

5. To install CMA connector C into the right slide-rail:
   a. Align connector C with the slide-rail so that the locking spring (callout 1) is positioned inside (server side) of the right slide-rail [1].

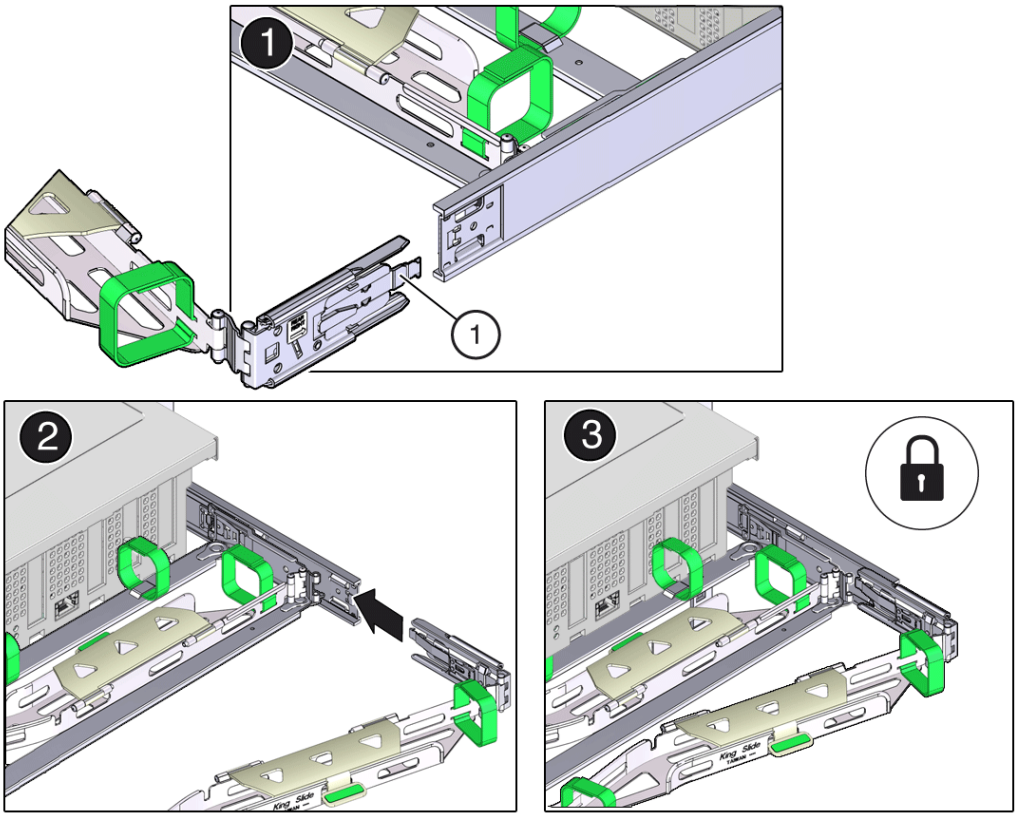

Call Out	Description
1	Connector C locking spring

Copyright © 2025, Oracle and/or its affiliates.

b. Insert connector C into the right slide-rail until it locks into place with an audible click [2 and 3].

c. Gently tug on the right side of the CMA back slide bar to verify that connector C is properly seated.

6. To prepare CMA connector D for installation, remove the tape that secures the slide-rail latching bracket to connector D, and ensure that the latching bracket is properly aligned with connector D [1 and 2].

> **Note**
>
> The CMA is shipped with the slide-rail latching bracket taped to connector D. You must remove the tape before you install this connector.

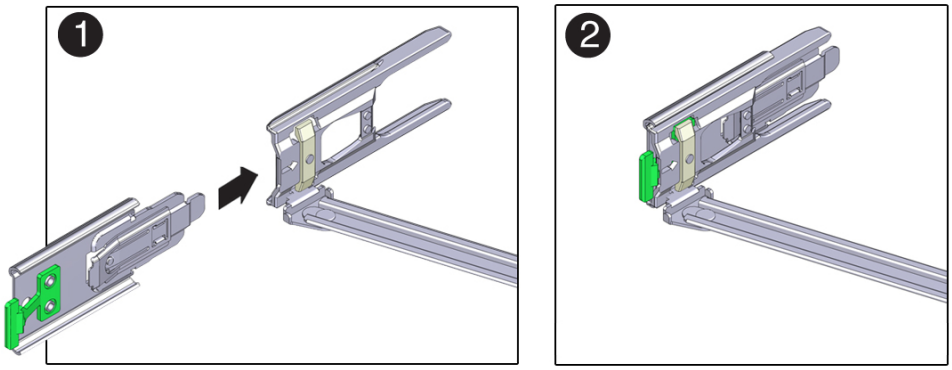

7. To install CMA connector D into the left slide-rail:

a. While holding the slide-rail latching bracket in place, insert connector D and its associated slide-rail latching bracket into the left slide-rail until connector D locks into place with an audible click [1 and 2].

> **Note**
>
> When inserting connector D into the slide-rail, the preferred and easier method is to install connector D and the latching bracket as one assembly into the slide-rail.

b. Gently tug on the left side of the CMA back slide bar to verify that connector D is properly seated.

> **Note**
>
> The slide-rail latching bracket has a green release tab. Use the tab to release and remove the latching bracket so that you can remove connector D.

Copyright © 2025, Oracle and/or its affiliates.

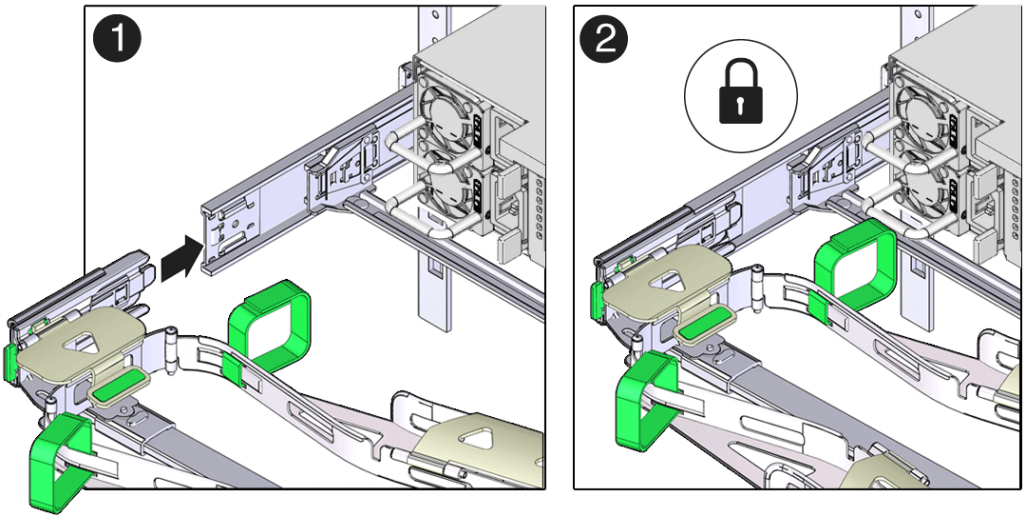

8. Gently tug on the four CMA connection points to ensure that the CMA connectors are fully seated before you allow the CMA to hang by its own weight.
9. To verify that the slide-rails and the CMA are operating properly before routing cables through the CMA:
   a. Ensure that the rack anti-tilt bar is extended to prevent the rack from tipping forward when the server is extended.

      Caution

      To reduce the risk of personal injury, stabilize the rack cabinet and extend the anti-tilt bar before extending the server from the rack.

      For instructions to stabilize the rack, see Stabilize the Rack.
   b. Slowly pull the server out of the rack until the slide-rails reach their stops.
   c. Inspect the attached cables for any binding or kinks.
   d. Verify that the CMA extends fully with the slide-rails.

Copyright © 2025, Oracle and/or its affiliates.

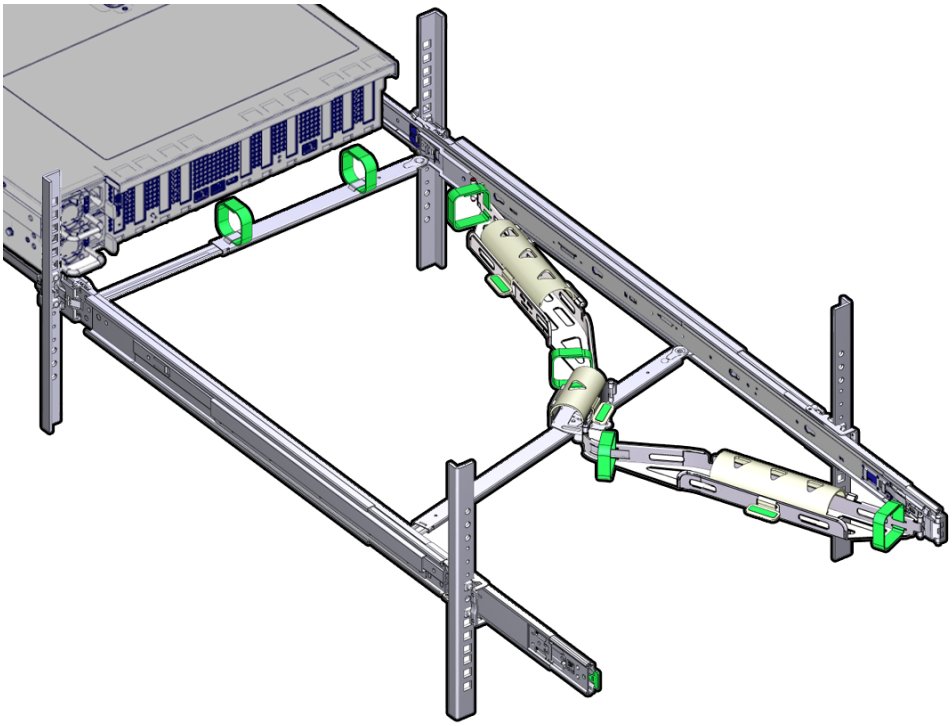

10. To return the server to the rack:
    a. Simultaneously pull and hold the two green release tabs (one on each side of the server) toward the front of the server while you push the server into the rack. As you push the server into the rack, verify that the CMA retracts without binding.
    b. To pull the green release tabs, place your finger in the center of each tab, not on the end, and apply pressure as you pull the tab toward the front of the server.

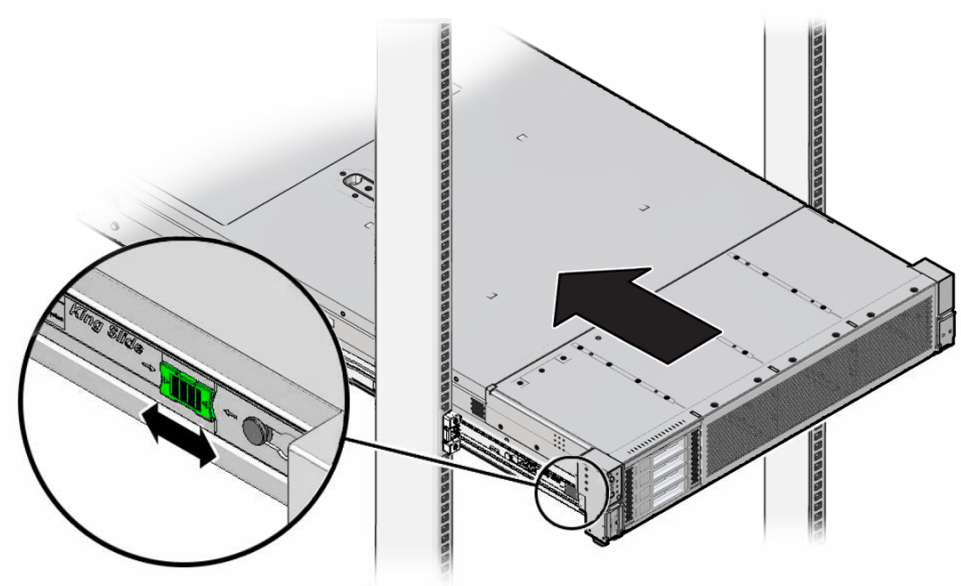

    c. Continue pushing the server into the rack until the slide-rail locks (on the front of the server) engage the slide-rail assemblies.

       You hear a click when the server is in the normal rack position.

Copyright © 2025, Oracle and/or its affiliates.

d. Retract the rack anti-tilt mechanism back to its normal position.

11. Connect cables to the server, as required.

12. Open the CMA cable covers, route the server cables through the CMA cable troughs (in the order specified in the following steps), close the cable covers, and secure the cables with the six Velcro straps.

    a. First through the front-most cable trough.

    b. Then through the small cable trough.

    c. Then through the back-most cable trough.

> ⚠ **Caution**
>
> When securing the cables with the Velcro straps located on the front slide bar, ensure that the Velcro straps do not wrap around the bottom of the slide bar. Otherwise, expansion and contraction of the slide bar might be hindered when the server is extended from the rack and returned to the rack.

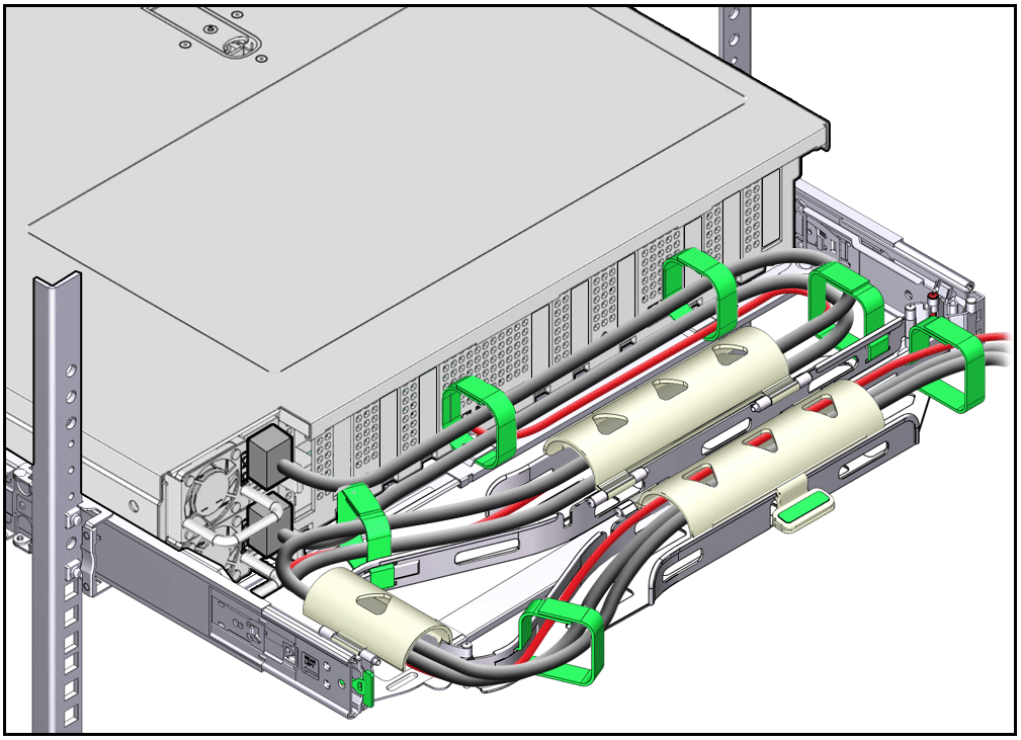

13. Ensure that the secured cables do not extend above the top or below the bottom of the server to which they are attached.

    Otherwise, the cables might snag on other equipment installed in the rack when the server is extended from the rack or returned to the rack.

14. If necessary, bundle the cables with additional Velcro straps to ensure that they stay clear of other equipment.

Copyright © 2025, Oracle and/or its affiliates.

> **Note**
>
> If you need to install additional Velcro straps, wrap the straps around the cables only, not around any of the CMA components. Otherwise, expansion and contraction of the CMA slide bars might be hindered when the server is extended from the rack and returned to the rack.

Powering On Oracle Database Appliance

1. If your system includes a storage shelf, perform the following actions:
   - If you powered off and disconnected the power cords from a storage shelf (and storage expansion shelf if one is present), reconnect the power cords now.

     The disks begin to initialize and the power supply LEDs light green. This can take several minutes.

     > **Note**
     >
     > Do not power on server nodes until the disks on the storage shelf and storage expansion shelf have initialized.
2. If you powered off a server, performing the following actions:
   a. Reconnect any unplugged power cords.

      As soon as the power cords are connected, Standby power is applied. In Standby power mode:
      - The System OK LED on the server front panel blinks slowly.
      - The SP OK LED indicator is steady on.
      - The AC power supply LED indicator lights are steady on.

        Depending on the firmware configuration, the system might boot. If it does not boot, perform the following procedure.

   b. Power on the server to Main power mode by performing one of the following actions:
      - Press the On/Standby button on the front bezel.
      - Log in to the Oracle ILOM web interface, click Host Management → Power Control, and select Power On from the Select Action list.
      - Log in to the Oracle ILOM command-line interface (CLI), and type the following command at the Oracle ILOM prompt:

        ```
        -> start /System
        ```

        When the server is powered on to Main power mode and the power-on self-test (POST) code checkpoint tests are complete, the green System OK LED status indicator on the front panel of the server lights and remains lit.

Copyright © 2025, Oracle and/or its affiliates.

7

Server Node Diagnostic Tools and Resetting the Service Processor

Learn about server node diagnostic tools and how to reset the SP.

Diagnostic tools are used to troubleshoot or monitor the performance of your system. Data gathered by the service processor (SP) of each server node helps in monitoring and identifying problems with server node hardware. If the SP hangs or becomes inaccessible, it might need to be reset.

> **Note**
>
> Most of the tools and procedures described in this chapter are reserved for Oracle Service personnel and should not be run on the appliance unless directed to do so by Oracle Service.

- Server Node Diagnostic Tools
  See a listing of the various Oracle Database Appliance diagnostic tools and where to obtain more information about them.
- Manually Resetting a Server's Service Processor

Server Node Diagnostic Tools

See a listing of the various Oracle Database Appliance diagnostic tools and where to obtain more information about them.

Oracle provides a wide selection of diagnostic tools for use with your server node. These tools include lights out management of the system, service processor recovery, power-on self-test (POST), UEFI or Pc-Check diagnostics, as well as hardware LEDs that indicate the status of system components.

> **Note**
>
> The links in the following table take you to instructions **outside** of the Oracle Database Appliance library. Use your browser's Back button to return to the Oracle Database Appliance library.

Copyright © 2025, Oracle and/or its affiliates.

Diagnostic Tool	What It Does	Where to Find Information
Oracle Integrated Lights Out Manager (ILOM)	Monitors server status, environmental conditions, generates alerts (SNMP traps, IPMI PETs, remote syslog), performs fault isolation, provides remote console access. Note that all patching/updating of Oracle Database Appliance is done with the regular Oracle Database Appliance Patch Set Bundle. This includes BIOS and SP firmware. This ensures that all software and firmware component versions are supported to work together. Patches are available through My Oracle Support.	Refer to the appropriate Oracle Integrated Lights Out Manager (ILOM) Documentation Library based on your appliance's supported version of Oraclel ILOM. Oracle Integrated Lights Out (ILOM) Documentation Library
System indicators and LEDs	Provides at-a-glance status of the system and its components.	• Overview of System Status Indicators and LEDs • You can also use Oracle ILOM to check server node indicator status. Refer to the appropriate Oracle Integrated Lights Out Manager (ILOM) Documentation Library based on your appliance's supported version of Oracle ILOM. Oracle Integrated Lights Out (ILOM) Documentation Library
Power-On Self-Test (POST)	Tests core components of system: CPUs, memory, and motherboard I/O bridge integrated circuits.	For Oracle Database Appliance, refer to the appropriate *Oracle x86 Servers Diagnostics Guide* based on your appliance's supported version of Oracle ILOM. Oracle x86 Servers Administration, Diagnostics, and Applications Library
UEFI Diagnostics	UEFI-based utility that tests and detect problems on all processor, memory, disk drives, and network ports. It is used on newer Oracle systems.	Refer to the appropriate *Oracle x86 Servers Diagnostics Guide* based on your appliance's supported version of Oracle ILOM. Oracle x86 Servers Administration, Diagnostics, and Applications Library

Manually Resetting a Server's Service Processor

You need a non-conductive stylus no more than 1.5 mm in diameter.

> ⚠ **Caution**
>
> Using a conductive tool, such as a metal paper clip or graphite pencil, can cause a short that can cause an immediate host power off, and/or circuit damage.

This section shows the location of the service processor (SP) reset button on the front panel of the server. The button is recessed to prevent accidental pressing. If the service processor becomes inaccessible, you can use a non-conductive stylus to press the SP reset button.

Copyright © 2025, Oracle and/or its affiliates.

If the Oracle ILOM SP stops running and you cannot reset it using the Oracle ILOM web interface or the Oracle ILOM CLI, use the following procedure to reset the SP from the server back panel.

1. Locate the SP reset pinhole button on the server back panel.

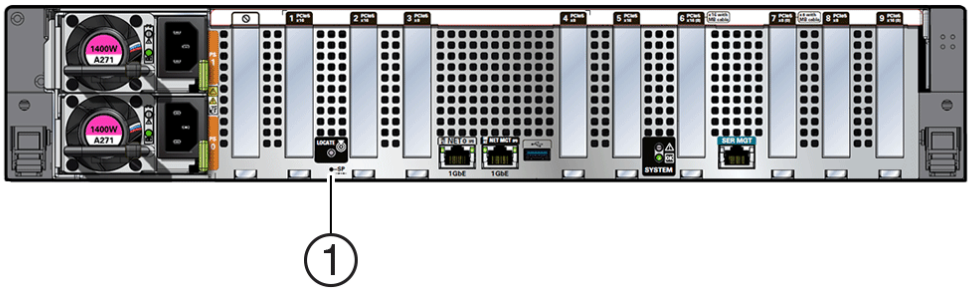

Callout	Description	Icon
1	SP Reset button	SP

2. Insert a non-conductive stylus straight into the SP reset pinhole no more than 6.5 mm (the distance to reach and depress the reset button).
   Care should be taken to not insert the stylus at an angle, to over penetrate, or accidentally touch the sensitive electrical components near the button. The stylus must be non-conductive with a diameter no more than 1.5 mm. To depress the pinhole button, the stylus must reach 6.5 mm into the chassis.
3. After initiating the SP reset, the OK LED will fast blink while the SP is rebooting.
   This can take a few minutes. The host will still operate normally.

> **Note**
>
> Any Oracle ILOM user sessions running on the SP will be terminated during SP reset. Once the SP has rebooted successfully, you will be able to log into Oracle ILOM.

4. After the SP successfully boots, the LED will remain steady on.

   You can confirm that the SP is working by logging into Oracle ILOM for that system.

   For details, refer to Oracle ILOM Documentation.

Copyright © 2025, Oracle and/or its affiliates.

8

Server Basic Input/Output System (BIOS)

Learn about the server node BIOS Setup Utility.

The Basic Input/Output System (BIOS) has a Setup Utility stored in the BIOS flash memory. The Setup Utility reports system information and can be used to configure the BIOS settings. The configurable data is provided with context-sensitive help and is stored in the system's battery-backed CMOS RAM. If the configuration stored in the CMOS RAM is invalid, the BIOS settings return to their default optimal values.

> **Note**
>
> The BIOS menus shown in this chapter are examples. The BIOS version numbers, menu information, and menu selections are subject to change over the life of the product. You should not change the factory settings unless prompted to do so by Oracle Service personnel.

- Accessing the BIOS Setup Utility
- Using UEFI BIOS

Accessing the BIOS Setup Utility

The BIOS Setup Utility allows you to view product information, and to configure, enable, and disable, or manage system components.

- BIOS Setup Utility Menus
- BIOS Key Mappings
- Access BIOS Setup Utility Menus
- Navigate BIOS Setup Utility Menus

BIOS Setup Utility Menus

The following table provides descriptions for the top-level BIOS Setup Utility menus.

Menu	Description
Main	View general BIOS information, including version, build date and time, memory, and system date and time.
Advanced	Configure APCB, trusted computing, PSP firmware, AMD CBS, serial port console redirection, PCI subsystem, NVMe, network stack, CPU, and disk freeze lock.
IO	Configure internal I/O devices, add-in cards, and PCIe connectors.
Security	Configure secure boot.
Boot	Configure the retry boot list, network boot retry, persistent boot support, and boot option priorities.

Copyright © 2025, Oracle and/or its affiliates.

Menu	Description
Save & Exit	Save changes and exit, discard changes and exit, discard changes, or restore the default BIOS settings.

BIOS Key Mappings

When viewing the BIOS output from a terminal using the serial console redirection feature, some terminals do not support function keys. BIOS supports the mapping of function keys to Control key sequences when serial redirection is enabled. The following table provides a description of the function key to Control key sequence mappings.

Function Key	Control Key Sequence	BIOS Setup Function
F1	Ctrl+Q	Activate the Setup Utility Help menu.
F2	Ctrl+E	Enter BIOS Setup Utility while the system is performing power-on self-test (POST).
F8	Ctrl+P	Activate the BIOS Boot Menu.
F10	Ctrl+S	Save and Exit changes.
F12	Ctrl+N	Activate Network boot.

Access BIOS Setup Utility Menus

You can access the BIOS Setup Utility screens from the following interfaces:

- Use a terminal (or terminal emulator connected to a computer) through the serial port on the back panel of the server.
- Connect to the server using the Oracle ILOM Remote System Console Plus application.

1. Reset or power on the server.

   For example, to reset the server:

   - **From the local server**, press the On/Standby button on the front panel of the server to power off the server, and then press the On/Standby button again to power on the server.
   - **Oracle ILOM CLI**: type `reset /System`
   - **Oracle ILOM web interface**: click **Host Management** → **Power Control** and select **Reset** from the **Select Action** list. Click **Save** and click **OK**.

2. After the server resets, to enter the BIOS Setup Utility, press the **F2** key (**Ctrl+E** from a serial connection) when prompted and while the BIOS is running the power-on self-tests (POST).

   The BIOS Setup Utility Main Menu screen appears.

Copyright © 2025, Oracle and/or its affiliates.

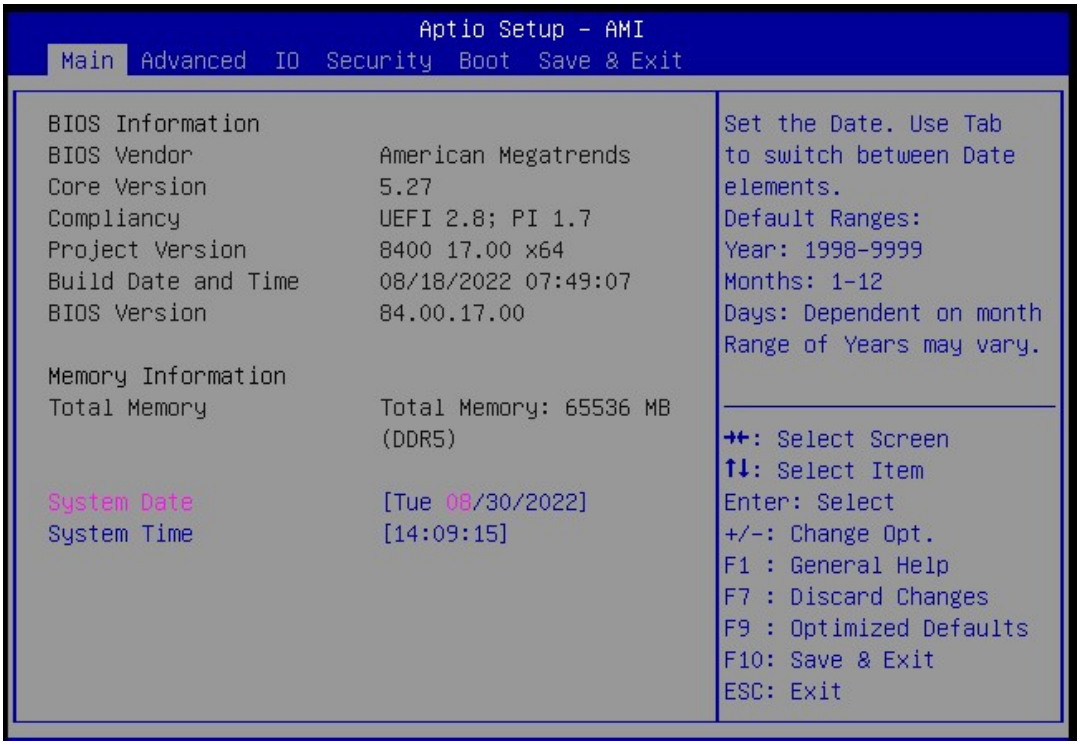

Navigate BIOS Setup Utility Menus

1. In the BIOS Setup Utility, press the left and right arrow keys to select the menu options.

   As you select a menu option, the top-level menu for that menu option appears.

2. To navigate options in a top-level menu, press the up and down arrow keys.

   Options that you can modify appear highlighted in the menu. User instructions for a selected menu option appear on the upper right side of the screen.

3. Modify an option by pressing the + or - (plus or minus) keys, or by pressing **Enter** and selecting the option from the menu.

   The navigation keys appear on the lower right side of the BIOS screen.

4. Press the **Esc** key to return from a sub-menu to the previous menu.

   Pressing **Esc** from a top-level menu is equivalent to selecting the **Discard Changes and Exit** option in the **Save** menu.

5. Modify the parameters, as needed.

6. Press the **F10** key to save your changes and exit the BIOS Setup Utility.

   Alternatively, you can select the **Save** menu, and select **Save Changes and Exit** to save your changes and exit the BIOS Setup Utility.

> **Note**
>
> After modifying any BIOS settings, the subsequent reboot might take longer than a typical reboot where you did not change any settings. The delay occurs because the changes to the BIOS settings are synchronized with Oracle ILOM.

Copyright © 2025, Oracle and/or its affiliates.

Using UEFI BIOS

The Oracle server has a Unified Extensible Firmware Interface (UEFI)-compatible BIOS, which runs with all operating systems that are supported on the server. The BIOS firmware controls the system from power-on until an operating system is booted and allows you to configure, enable, disable, or manage system components.

- Configuration Utilities for Add-In Cards
- Configure and Manage BIOS Using Oracle ILOM
- UEFI Secure Boot

Configuration Utilities for Add-In Cards

In UEFI BIOS, the configuration screens for the add-in cards appear as menu items in the BIOS Advanced Menu as part of the standard BIOS Setup Utility screens. For example, if the Oracle Storage 12 Gb SAS PCIe RAID HBA, Internal card is installed in the server, the configuration utility for the HBA appears as a menu selection.

Configure and Manage BIOS Using Oracle ILOM

Oracle Integrated Lights Out Manager (ILOM) includes BIOS configuration and management tools. You can perform the following BIOS configuration tasks using Oracle ILOM:

- View the BIOS configuration synchronization status and synchronize the configuration parameters
- Reset the factory defaults for the service processor (SP) and Oracle ILOM BIOS
- Back up or restore the BIOS configuration
- Enable UEFI diagnostics to run at system boot

Oracle ILOM Documentation

UEFI Secure Boot

The Oracle server UEFI BIOS supports UEFI Secure Boot. UEFI Secure Boot defines how platform firmware can authenticate a digitally signed UEFI image, such as an operating system loader or a UEFI driver.

When enabled, UEFI Secure Boot provides a policy-based invocation of various UEFI executable images, using cryptographic signatures to identify the software publishers. UEFI Secure Boot also requires all third-party UEFI drivers and operating system boot loaders to be signed by Microsoft or with Key Exchange Key (KEK) by using BIOS setup.

UEFI Secure Boot is enabled by default.

Copyright © 2025, Oracle and/or its affiliates.

Index

Numerics

4-Drive backplane
    installing, *26*
    removing, *23*
4-Drive backplane cables
    installing, *26*
    removing, *23*

A

add-in cards
    configuration utilities in UEFI BIOS, *4*
antistatic
    using a wrist strap and mat, *5*

B

back panel pinhole switch, *2*
battery
    description, *3*
    installing, *24*
    removing, *21*
    replacing, *21*
BIOS
    memory testing, *1*
    overview, *1*
    POST errors, *1*
BIOS key maps, *2*
BIOS setup utility, *1*
BIOS Setup Utility
    accessing, *2*
    menus, accessing, *2*
    navigating menu options, *3*
    setup screens summary, *1*
    UEFI BIOS, *4*
buttons
    On/Standby, *9*, *10*, *13*

C

cable management arm (CMA)
    installing on server, *5*
    uninstalling, *13*
cables
    disconnecting, *11*
CPUs
    clearing faults, *53*
    servicing, *1*
CRUs
    removal that does not require system power off, *1*
    servicing non-hotplug components, *1*

D

DBP signal cable
    installing, *32*
    removing, *30*
diagnostic tools
    summary of, *1*
diagnostics
    available tools, *1*
DIMM population order (dual-processor systems), *11*
DIMM population order (single-processor systems), *11*
DIMMs
    clearing faults, *53*
    description, *3*
    Fault Remind button, *11*
    identifying a failed DIMM, *12*
    installing, *13*
    labels, *11*
    physical layout, *9*
    population for optimal performance, *11*
    population rules, *10*
    population scenarios, *10*
    rank classification labels, *11*
    removing, *12*
    replacing, *8*
    speed, *11*
    supported configurations, *10*
disk backplane
    description, *3*
    replacing, *22*
disk backplane cables
    replacing, *22*
disk drives
    adding NVMe storage to the server Oracle Database Appliance X11-L, *4*

Copyright © 2025, Oracle and/or its affiliates.

disk drives *(continued)*
adding optional drives to the storage shelf
Oracle Database Appliance X11-HA, *11*
replacing in server, *1*
replacing in storage shelf, *15*
replacing NVMe storage
Oracle Database Appliance X11-S/X11-L, *2*

E

electrostatic discharge
prevention, *17*
safety precautions, *5*
Ethernet ports
LEDs
Oracle Database Appliance X11-HA, *9*
Oracle Database Appliance X11-S/X11-L, *4*
extend server, *12*
external cap, *40*

F

fan module
description, *3*
installing, *7*
removing, *5*
replacing, *5*
fan tray
installing, *20*
removing, *19*
replacing, *5*
servicing, *18*
fans
detecting faults using LEDs
Oracle Database Appliance X11-HA, *7*
Oracle Database Appliance X11-S/X11-L, *1*
replacing in server, *1*
fault identification
DIMMs, *11*
Fault Remind button
location, *11*
using, *11*
faults
clearing CPU faults, *53*
clearing DIMM faults, *53*
clearing PCIe card faults, *53*
clearing PCIe riser faults, *53*
clearing the primary HBA card faults, *53*
managing, *53*
flash riser board
installing, *7*
removing, *5*
FRU key identity properties (KIP), *5*
FRUs
servicing non-hotplug FRU components, *1*

H

hot-plug components
server, *1*
hot-pluggable components, *1*

I

I/O module
replacing in storage shelf, *19*
illustrated parts breakdown, *1*
ILOM
used as diagnostic tool, *1*
installing
cable management arm, *5*
installing components
4-Drive backplane, *26*
battery, *24*
DBP signal cable, *32*
DIMMs, *13*
fan module, *7*
fan tray, *20*
flash riser board, *7*
LED indicator module, *36*
M.2 flash SSD, *4*
motherboard assembly, *50*
PCIe cards, *19*
PCIe flyover cable, *39*
power supply, *9*
processors, *12*
server into rack, *3*
server top cover, *2*
internal M.2 flash SSDs
description, *3*

L

LED indicator module
description, *3*
installing, *36*
removing, *34*
replacing, *34*
LEDs
AC OK
Oracle Database Appliance X11-HA, *9*
Oracle Database Appliance X11-S/X11-L, *4*
Activity
Oracle Database Appliance X11-HA, *7*
Oracle Database Appliance X11-S/X11-L, *1*

Copyright © 2025, Oracle and/or its affiliates.

LEDs *(continued)*
component failure
Oracle Database Appliance X11-S/X11-L, *1*
DC OK
Oracle Database Appliance X11-HA, *9*
Oracle Database Appliance X11-S/X11-L, *4*
Ethernet ports
Oracle Database Appliance X11-HA, *9*
Oracle Database Appliance X11-S/X11-L, *4*
fans
Oracle Database Appliance X11-HA, *7*
Oracle Database Appliance X11-S/X11-L, *1*
general status
Oracle Database Appliance X11-HA, *7*
Oracle Database Appliance X11-S/X11-L, *1*
Locate
Oracle Database Appliance X11-HA, *7*
Oracle Database Appliance X11-S/X11-L, *1*
OK
Oracle Database Appliance X11-HA, *7*
Oracle Database Appliance X11-S/X11-L, *1*
Oracle Database Appliance X11-HA, *6*
Oracle Database Appliance X11-S/X11-L, *1*
Over Temperature
Oracle Database Appliance X11-HA, *7*
Oracle Database Appliance X11-S/X11-L, *1*
power supplies
Oracle Database Appliance X11-HA, *7*
Oracle Database Appliance X11-S/X11-L, *1*
power supply, *8*
Power/OK
Oracle Database Appliance X11-HA, *7*
Oracle Database Appliance X11-S/X11-L, *1*
Ready to Remove
Oracle Database Appliance X11-HA, *7*
Oracle Database Appliance X11-S/X11-L, *1*
rear component failure
Oracle Database Appliance X11-HA, *7*
Oracle Database Appliance X11-S/X11-L, *4*
server front Locate
Oracle Database Appliance X11-S/X11-L, *1*
server node rear Locate
Oracle Database Appliance X11-HA, *9*

LEDs *(continued)*
server node rear Power/OK
Oracle Database Appliance X11-HA, *7*
server node rear Service Required
Oracle Database Appliance X11-HA, *9*
server node Service Required
Oracle Database Appliance X11-HA, *7*
server rear Locate
Oracle Database Appliance X11-S/X11-L, *4*
server rear Power/OK
Oracle Database Appliance X11-S/X11-L, *4*
server Service Required
Oracle Database Appliance X11-S/X11-L, *1*
SP OK/Fault
Oracle Database Appliance X11-HA, *7*
Oracle Database Appliance X11-S/X11-L, *1*
storage devices
Oracle Database Appliance X11-HA, *7*
Oracle Database Appliance X11-S/X11-L, *1*
storage shelf back panel
Oracle Database Appliance X11-HA, *13*
storage shelf front panel
Oracle Database Appliance X11-HA, *11*

M

M.2 flash solid-state drives (SSDs), *1*
M.2 flash SSD
installing, *4*
removing, *2*
Main power, *9*, *10*
memory, *8*
menus, BIOS Setup Utility, *2*
motherboard assembly
description, *3*
installing, *50*
removing, *40*
replacing, *40*

N

network cards
adding, *16*
Network Time Protocol (NTP), *24*
NVMe cables
description, *3*
NVMe drives
adding to server
Oracle Database Appliance X11-S/X11-L, *2*

Copyright © 2025, Oracle and/or its affiliates.

NVMe drives *(continued)*
replacing in server
Oracle Database Appliance X11-S/X11-L, *2*

O

ODA X11 series server, *1*
On/Standby
button, *9*, *10*, *13*
Oracle ILOM
UEFI BIOS, *4*
Oracle Integrated Lights Out Manager (ILOM)
key identity properties (KIP) for FRUID auto-update feature, *5*
Oracle Integrated Lights Out Manager (Oracle ILOM)
used as diagnostic tool, *1*

P

Pc-Check, *1*
PCIe cards
adding, *16*
clearing faults, *53*
description, *3*
installing, *19*
removing, *18*
replacing, *15*
slot characteristics, *15*
PCIe flyover cable
installing, *39*
removing, *38*
PCIe riser
clearing faults, *53*
PCIe slot 6 and 7
replacing the Flyover cable, *38*
PCIe slot Flyover cable
replacing, *38*
PCIe slot numbering, *15*
population rules
DIMMs, *10*
population scenarios
DIMMs, *10*
power
Main power mode, *9*, *10*
server on, *13*
Standby power mode, *11*
power down server
gracefully, *7*
immediately, *10*
using On/Standby button, *9*
power off the system, options, *7*
power on
returning the system to operation, *1*
power supplies
replacing in server, *1*
replacing in storage shelf, *16*
server, *1*
status indicators
Oracle Database Appliance X11-HA, *7*, *9*
Oracle Database Appliance X11-S/X11-L, *1*, *4*
power supply
description, *3*
installing, *9*
LEDs, *8*
removing, *8*
power-on self-test (POST), *1*
power-on self-test (POST) events, *1*
processor socket cover
installing, *40*
removing, *40*
processors
components, *2*
description, *3*
installing, *1*, *12*
maximum DIMMs supported, *10*
overview, *1*
package, *2*
physical layout, *9*
removing, *1*, *3*

R

rack
stability for installation, *11*
rackmount
stabilizing the rack, *11*, *13*, *10*
removing cable management arm, *13*
removing components
4-Drive backplane, *23*
antistatic measures, *2*
battery, *21*
DBP signal cable, *30*
DIMMs, *12*
fan module, *5*
fan tray, *19*
flash riser board, *5*
LED indicator module, *34*
M.2 flash SSD, *2*
motherboard assembly, *40*
PCIe cards, *18*
PCIe flyover cable, *38*
power supply, *8*
processors, *3*
server top cover, *17*
replaceable components
hot service components, *1*
reset SP, *2*

Copyright © 2025, Oracle and/or its affiliates.

S

safety
- ESD precautions, 5
- precautions, 4
- symbols, 4

SAS cables
- description, 3

screens, BIOS Setup Utility, 1, 2

server
- back panel indicators
  - Oracle Database Appliance X11-S/X11-L, 4
- exploded view, 1
- front panel indicators
  - Oracle Database Appliance X11-S/X11-L, 1
- installing into rack, 3
- removing from rack, 16

server locate
- Oracle Database Appliance X11-S/X11-L, 1

server node
- back panel indicators
  - Oracle Database Appliance X11-HA, 9
- front panel indicators
  - Oracle Database Appliance X11-HA, 7

server node rear Locate
- Oracle Database Appliance X11-HA, 9

server rear Locate
- Oracle Database Appliance X11-S/X11-L, 4

server top cover
- installing, 2
- removing, 17

server, power on, 2

service
- preparing server, 6

service processor
- resetting using pinhole switch, 2

servicing
- CPUs, 1
- fan modules
  - Oracle Database Appliance Version 1, 7
- hot-plug components, 1
- non-hotplug customer replacable components, 1
- non-hotplug field replacable components, 1
- preparing the system, 1
- replacing a power supply in storage shelf, 16
- replacing disk drives in a storage shelf, 15
- replacing fans in server, 1
- replacing hard disk drives in server, 1
- replacing I/O module in storage shelf, 19
- replacing power supplies in server, 1
- resetting the SP, 1
- returning the system to operation, 1
- troubleshooting and diagnostics, 1

Setup
- BIOS Setup Utility overview, 1

shutting down
- preparing the system for servicing, 1

shutting down the system
- gracefully, using Oracle ILOM CLI, 7
- gracefully, using Oracle ILOM web interface, 8
- gracefully, using the On/Standby button, 9
- immediately, using Oracle ILOM CLI, 9
- immediately, using Oracle ILOM web interface, 10
- immediately, using the On/Standby button, 10

Standby power, 11

status indicators , 1, 7
- AC OK
  - Oracle Database Appliance X11-HA, 9
  - Oracle Database Appliance X11-S/X11-L, 4
- Activity
  - Oracle Database Appliance X11-HA, 9
  - Oracle Database Appliance X11-S/X11-L, 4
- DC OK
  - Oracle Database Appliance X11-HA, 9
  - Oracle Database Appliance X11-S/X11-L, 4
- Ethernet ports
  - Oracle Database Appliance X11-HA, 9
  - Oracle Database Appliance X11-S/X11-L, 4
- fans
  - Oracle Database Appliance X11-HA, 7
  - Oracle Database Appliance X11-S/X11-L, 1
- general status
  - Oracle Database Appliance X11-HA, 7
  - Oracle Database Appliance X11-S/X11-L, 1
- Locate
  - Oracle Database Appliance X11-HA, 7
  - Oracle Database Appliance X11-S/X11-L, 1
- Oracle Database Appliance X11-HA, 6
- Oracle Database Appliance X11-S/X11-L, 1
- Over Temperature
  - Oracle Database Appliance X11-HA, 7
  - Oracle Database Appliance X11-S/X11-L, 1
- power supplies
  - Oracle Database Appliance X11-HA, 7
  - Oracle Database Appliance X11-S/X11-L, 1
- Power/OK
  - Oracle Database Appliance X11-HA, 7
  - Oracle Database Appliance X11-S/X11-L, 1

Copyright © 2025, Oracle and/or its affiliates.

status indicators *(continued)*
Ready to Remove
Oracle Database Appliance X11-HA, *7*
Oracle Database Appliance X11-S/X11-L, *1*
rear component failure
Oracle Database Appliance X11-HA, *7*
Oracle Database Appliance X11-S/X11-L, *4*
server node rear Power/OK
Oracle Database Appliance X11-HA, *7*
server node rear Service Required
Oracle Database Appliance X11-HA, *9*
server node SP OK/Fault
Oracle Database Appliance X11-HA, *7*
Oracle Database Appliance X11-S/X11-L, *1*
server rear Power/OK
Oracle Database Appliance X11-S/X11-L, *1*
server rear Service Required
Oracle Database Appliance X11-S/X11-L, *4*
server Service Required
Oracle Database Appliance X11-S/X11-L, *1*
Service Required
Oracle Database Appliance X11-HA, *7*
Oracle Database Appliance X11-S/X11-L, *1*
storage devices
Oracle Database Appliance X11-HA, *7*
Oracle Database Appliance X11-S/X11-L, *1*
storage
adding NVMe storage to the server
Oracle Database Appliance X11-L, *4*
replacing NVMe storage
Oracle Database Appliance X11-S/X11-L, *2*
storage drives
description, *3*
storage shelf
adding optional drives to the ODA X11-HA storage shelf, *11*
replacing a power supply, *10*
replacing a SAS I/O module, *10*
replacing a storage drive, *10*
replacing storage drives, *15*
storage shelf indicators
back panel
Oracle Database Appliance X11-HA, *13*
front panel
Oracle Database Appliance X11-HA, *11*

T

tools required for service, *6*
troubleshooting
diagnostics and resetting the SP, *1*

U

UEFI Secure Boot
description, *4*

W

weight of server, *16*

Copyright © 2025, Oracle and/or its affiliates.